CITY OF MASSILLON

CITY ENGINEER DEPARTMENT

STARK COUNTY, OHIO

32nd ST. NW BRIDGE REPLACEMENT

PROJECT DESCRIPTION

REPLACEMENT OF THE EXISTING BRIDGE WITH A PRE CAST 4 SIDED BOX CULVERT. RELOCATION OF EXISTING SANITARY AND STORM SEWERS.

CONVENTIONAL SIGNS

RIGHT OF WAY • • EXISTING: ——— ———, PROPOSED: ————
COUNTY LINE • • •
TOWNSHIP LINE • •
CORPORATION LINE
FENCE LINE • • • EXISTING: —x—x—, PROPOSED: —x——x—
GUARDRAIL • • • EXISTING: —o— —o—, PROPOSED: —•——•—
MANHOLES • • • • EXISTING: ○, PROPOSED: ◉, REHABILITATED: ◉
CATCH BASINS • • EXISTING: ⊡, PROPOSED: ▣, REHABILITATED: ▣
SIGNS • • • • • • 1-POST: ⊦, 2-POST: ⊧, 3-POST: ⊫
EXISTING POLES • • POWER: ϕ, TELEPHONE ϕ, LIGHT ϕ, SPAN ϕ
PROPOSED POLES • POWER: ϕ, TELEPHONE ϕ, LIGHT ϕ, SPAN ϕ
EXIST. UTILITIES • VALVE: ծ, HYDRANT: ⚲, METERS: ⊠ / ⊠, GUY: ⊂

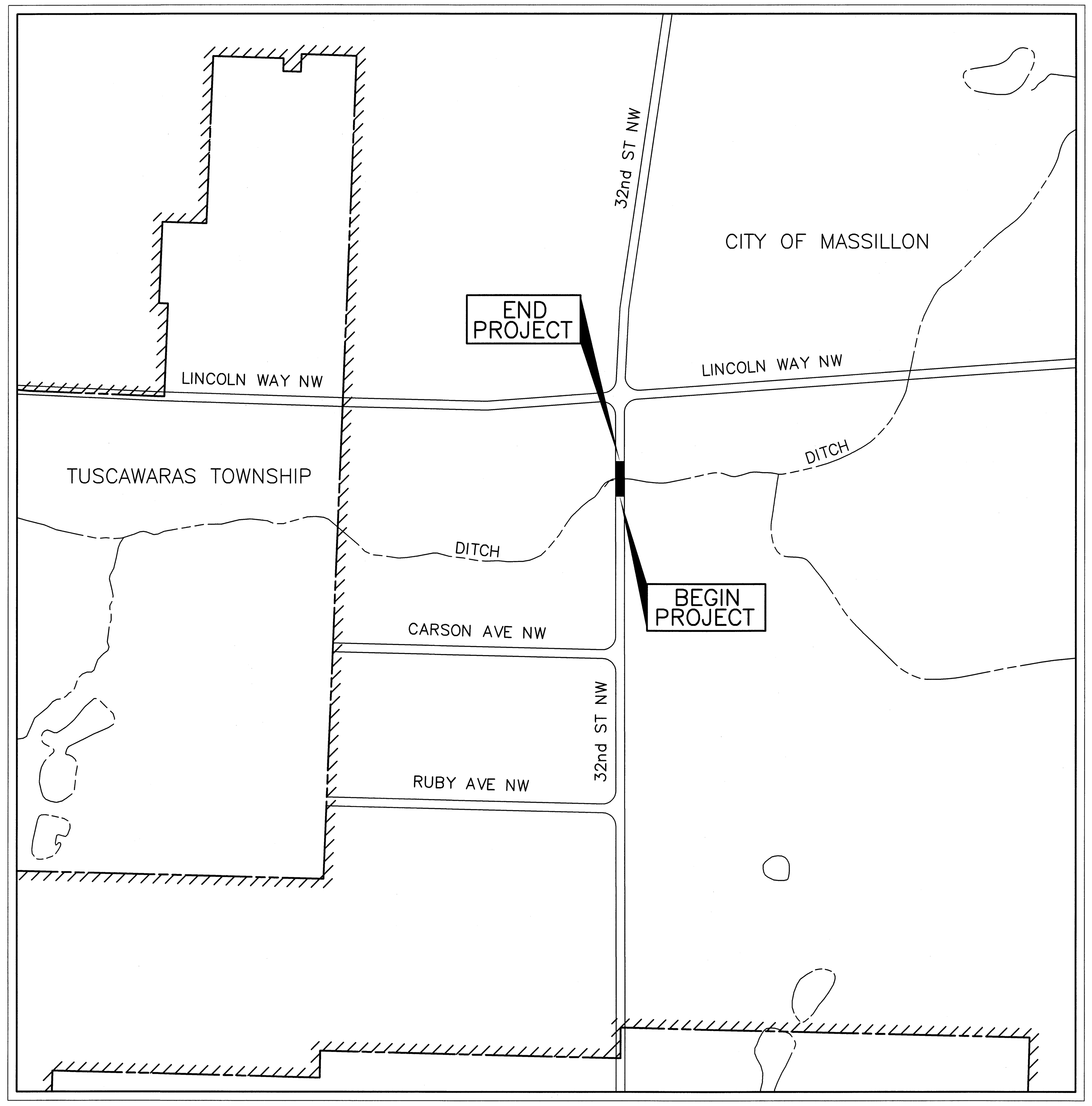

LOCATION MAP

PORTION TO BE IMPROVED
STREETS

UNDERGROUND UTILITIES
TWO WORKING DAYS BEFORE YOU DIG CALL 1-800-362-2764 (TOLL FREE) OHIO UTILITIES PROTECTION SERVICE NON-MEMBERS MUST BE CALLED DIRECTLY
TWO WORKING DAYS BEFORE YOU DIG 1-800-925-0988 (TOLL FREE) OIL @ GAS PRODUCERS UNDERGROUND PROTECTION SERVICE

PLAN PREPARED BY:

CITY OF MASSILLON
Engineering Department

OWNER:

CITY OF MASSILLON
151 Lincoln Way East
Massillon, Ohio 44646

Francis H. Cicchinelli, Jr.
Mayor

Massillon Means More!

INDEX OF SHEETS:

TITLE SHEET • • • • • • • • • • • • • 1
GENERAL NOTES • • • • • • • • • • • 2-4
TYPICAL SECTION • • • • • • • • • • 4
EXISTING/DEMOLITION PAN AND PROFILE • 5
32nd ST. NE PLAN AND PROFILE • • • • 6-7
32ND ST. NE CROSS SECTIONS • • • • • 8-10
DITCH PLAN AND PROFILE • • • • • • • 11
DITCH CROSS SECTIONS • • • • • • • • 12
MISCELLANEOUS DETAILS • • • • • • • • 13-14
SUB-SUMMARY • • • • • • • • • • • • 15

APPROVALS

[signature] 6/8/09
DIRECTOR OF PUBLIC SAFETY AND SERVICE — MICHAEL J. LOUDIANA — DATE

[signature] 6/9/09
CITY ENGINEER — KEITH A. DYLEWSKI, P.E. — DATE

STATE OF OHIO — KEITH A. DYLEWSKI — E-70907 — REGISTERED PROFESSIONAL ENGINEER

CITY OF MASSILLON ELECTED OFFICIALS

FRANCIS H. CICCHINELLI, Jr. • • • • • • • • • • • • • • • • MAYOR
PERICLES G. STERGIOS • • • • • • • • LAW DIRECTOR/PROSECUTOR
JAYNE FERRERO • AUDITOR
PAUL LAMBERT • TREASURER

COUNCIL

GLEN E. GAMBER • • • • • • • • • • • • • • • • • • PRESIDENT
RONALD E. MANG • • • • • • • • • • • • • • • • • • 1st WARD
CHUCK MAIER • • • • • • • • • • • • • • • • • • • 2nd WARD
KATHERINE CATAZARO-PERRY • • • • • • • • • • • • • 3rd WARD
TONY M. TOWNSEND • • • • • • • • • • • • • • • • • 4th WARD
DONNIE PETERS JR. • • • • • • • • • • • • • • • • • 5th WARD
DAVID K. McCUNE • • • • • • • • • • • • • • • • • • 6th WARD
PAUL MANSON • • • • • • • • • • • • • • • • • • • AT LARGE
LARRY SLAGLE • • • • • • • • • • • • • • • • • • • AT LARGE
DAVID HERSHER • • • • • • • • • • • • • • • • • • AT LARGE

NW NE SW SE N

200 100 0
HORIZONTAL SCALE IN FEET

DRAWN BY:	CHECKED BY:
FPW	KAD
DATE: July, 2008	DATE: July, 2008

32nd St. NW Bridge Replacement

Title Sheet
City of Massillon
Stark County, Ohio

Francis H. Cicchinelli, Jr.
Mayor
Massillon Means More!

REVISIONS:

DATE	DESCRIPTION
6/5/2009	Sanitary Notes

FILE NAME: 32ndtitle.DWG

ACCOUNT NUMBER: 08BR01

UTILITIES

LISTED BELOW ARE ALL KNOWN UTILITIES LOCATED WITHIN THE PROJECT CONSTRUCTION LIMITS TOGETHER WITH THEIR RESPECTIVE OWNERS:

AT&T
50 W.BOWERY, 6TH FLOOR
AKRON, OH 44308
800-384-8057

AQUA OHIO WATER
P.O. BOX 584
MASSILLON, OH 44648
(330) 833-4156

OHIO EDISON
STARK DIVISION
2600 S. ERIE ST.
MASSILLON, OH 44545
(330) 833-3141

MASSILLON CABLE TV
P.O. BOX 814
MASSILLON, OH 44648
(330) 833-4134

GREAT LAKES
104 6TH ST. S.W.
CANTON, OH 44702
(330) 456-2454

CITY OF MASSILLON
SANITARY SEWER
151 LINCOLN WAY EAST
MASSILLON, OH 44646
(330) 830-1722

AT&T COMMUNICATIONS
2535 E. 40TH AVE.
DENVER, CO 80205-3601
(800) 852-3786

DOMINION EAST OHIO GAS COMPANY
4725 SOUTHWAY ST. S.W.
CANTON, OH 44706
(330) 478-3142

NORTHEAST OHIO NATURAL
GAS CORP.
9081 S.R. 250
STRASBURG, OH 44680-9766
(330) 878-5589

THE CONTRACTOR SHALL NOTIFY ALL UTILITIES 48 HOURS PRIOR TO WORK.

THE LOCATION OF THE UNDERGROUND UTILITIES SHOWN ON THE PLANS ARE SHOWN AT APPROXIMATE LOCATIONS AND WHERE OBTAINED AS REQUIRED FROM THE OWNERS AS REQUIRED BY SECTION 153.64 O.R.C.

OUPS - 1-800-362-2764
OGUPUPS - 1-800-925-0988

DATUM ELEVATION

ALL BENCHMARKS ARE BASED ON REFERENCE BENCHMARKS PROVIDED BY THE CITY OF MASSILLON.

STATIONING

ALL STATIONING SHOWN IS REFERENCED TO THE BASELINE AS SHOWN.

NOTIFICATION OF SAFETY FORCES AND BUS GARAGES

THE CONTRACTOR SHALL NOTIFY ALL AGENCY LISTED BELOW AT LEAST 48 HOURS IN ADVANCE OF ANY STREET CLOSING OR TRAFFIC CHANGE.

MASSILLON SAFETY SERVICE 330-830-1702	MASSILLON FIRE DEPARTMENT 330-833-1053	PERRY TOWNSHIP HALL 330-833-2141	NORTH LAWRENCE FIRE DEPT. 330-832-6347
TUSCARAWAS TOWNSHIP HALL 330-832-4337	JACKSON FIRE DEPARTMENT 330-832-1553	MASSILLON POLICE DEPARTMENT 330-830-1735	MASSILLON SCHOOL BUS GARAGE 330-830-1849
JACKSON TOWNSHIP HALL 330-832-7416	PERRY FIRE DEPARTMENT 330-478-5121	JACKSON POLICE DEPARTMENT 330-497-7440	JACKSON SCHOOL BUS GARAGE 330-830-8042
PERRY POLICE DEPARTMENT 330-833-3865	PERRY SCHOOL BUS GARAGE 330-477-1300	STARK COUNTY SHERIFF 330-430-3887	TUSCARAWAS SCHOOL BUS GARAGE 330-837-7805
SARTA 330-454-5333			

SUBSURFACE CONDITIONS

IT IS THE OBLIGATION AND RESPONSIBILITY OF THE CONTRACTOR TO MAKE HIS OWN INVESTIGATION OF SUBSURFACE CONDITIONS PRIOR TO SUBMITTING THEIR BID. PROSPECTIVE BIDDERS ARE TO COORDINATE WITH THE OWNER FOR ACCESS TO THE SITE FOR INSPECTIONS AND EXPLORATORY EXCAVATION. THE BIDDER SHALL CONTACT THE OWNER AT LEAST 72 HOURS IN ADVANCE OF THE DESIRED INSPECTION OR EXCAVATION. THE BIDDER SHALL CONTACT O.U.P.S. AND OBTAIN LOCATIONS OF OTHER UTILITIES.

QUANTITIES

QUANTITIES ARE INDICATED FOR COMPARISON OF BIDS ONLY. IT SHALL BE THE RESPONSIBILITY OF THE CONTRACTOR TO VERIFY QUANTITIES BEFORE ORDERING MATERIALS. VARIATIONS FROM THE PLAN QUANTITIES SHALL BE APPROVED BY THE CITY ENGINEER BEFORE MATERIAL ORDERS ARE PLACED. MATERIALS REJECTED DUE TO INCOMPATIBILITY BETWEEN ORDERED QUANTITIES AND FIELD CONDITIONS SHALL BE REPLACED AT THE CONTRACTOR'S EXPENSE.

CONSTRUCTION SPECIFICATIONS & STANDARDS

ALL CONSTRUCTION IS TO BE ACCORDING TO THE CITY OF MASSILLON SPECIFICATIONS AND STANDARDS, AND THE LATEST EDITION OF THE STATE OF OHIO DEPARTMENT OF TRANSPORTATION CONSTRUCTION AND MATERIAL SPECIFICATIONS. WHEN A CONFLICT ARISES BETWEEN THE CITY OF MASSILLON AND ODOT'S STANDARDS, THE MORE STRINGENT STANDARD WILL BE USED AT THE DISCRETION OF THE CITY ENGINEER. THE CONTRACTOR SHALL FOLLOW ALL OSHA AND ADA REGULATIONS AND REQUIREMENTS.

PRESERVATION OF EXISTING UTILITY SERVICES

ANY EXISTING WATER LINE, SANITARY SEWER, STORM SEWER, GAS LINE OR OTHER UTILITY IN OR OUTSIDE OF THE CONSTRUCTION LIMITS DAMAGED DURING CONSTRUCTION OF THE PROPOSED PROJECT, WILL BE REPLACED AT THE CONTRACTORS EXPENSE.

CONTRACTOR AVAILABILITY

THE CONTRACTOR SHALL SUPPLY THE ENGINEER WITH A 24 HOUR PHONE NUMBER WHERE THE CONTRACTOR SHALL BE AVAILABLE FOR EMERGENCIES.

PRESERVATION OF PRIVATE PROPERTY

THE CONTRACTOR SHALL PERFORM WORK AS TO NOT DISTURB, DAMAGE OR DESTROY ANY TELEPHONE OR POWER POLES, SIGNS, LANDSCAPING ITEMS, ETC.. ANY ITEM DAMAGED OR DESTROYED SHALL BE REPLACED AT THE CONTRACTOR'S EXPENSE AND ANY ITEM DISTURBED OR IN CONFLICT WITH THE WORK TO BE PERFORMED SHALL BE REMOVED AND RESET AT THE CONTRACTOR'S EXPENSE. PRIOR ENGINEER APPROVAL IS REQUIRED BEFORE ANY OF THE ABOVE ITEMS ARE PERFORMED.

ACCESSIBILITY TO PRIVATE PROPERTY

ACCESS TO ALL DRIVEWAYS AND PARKING AREAS WITHIN THE PROJECT LIMITS SHALL BE MAINTAINED AT ALL TIMES. THE TRENCH SHALL BE BACKFILLED AT THE END OF EACH WORK DAY TO PROVIDE ACCESS. THE CONTRACTOR MUST NOTIFY EACH PROPERTY OWNER AT LEAST 24 HOURS IN ADVANCE OF CUTTING THEIR DRIVEWAY.

EXISTING DATA

EACH CONTRACTOR SHALL VISIT THE SITE PERSONALLY TO ASCERTAIN THE NATURE OF THE WORK AND BECOME THOROUGHLY FAMILIARIZED WITH THE SITE PRIOR TO BID SUBMISSION.

EXISTING STRUCTURES, GRADES, PIPING, ETC. ARE INDICATED IN APPROXIMATE LOCATION ON THE PLAN. INFORMATION SHOWN IS NOT GUARANTEED TO BE CORRECT AND COMPLETE. THE DATA SHALL BE VERIFIED IN THE FIELD BY THE CONTRACTOR. THE EXISTENCE OF FACILITIES ABOVE OR BELOW GROUND, WHICH MAY NOT BE SHOWN, WILL NOT BE A BASIS FOR A CLAIM FOR EXTRA WORK.

EXISTING UNDERGROUND UTILITIES SHOWN ARE RECORDS PROVIDED BY UTILITY COMPANIES AND ARE APPROXIMATE ONLY. SERVICE LATERALS ARE NOT SHOWN.

IT IS THE RESPONSIBILITY OF CONTRACTOR TO NOTIFY THE CITY, PRIOR TO BID OPENING OF NON-CONFORMING OR CONFLICTING INFORMATION.

EXCAVATED MATERIAL

ALL EXCAVATED MATERIAL AND ALL MATERIAL USED IN CONSTRUCTION OF THE WORK SHALL BE PILED AND STORED IN A MANNER THAT WILL NOT ENDANGER THE WORK AND THAT WILL LEAVE DRIVEWAYS OR OTHER CONTROLS UNOBSTRUCTED AND ACCESSIBLE WHILE THE WORK IS TO BE COMPLETED. SATISFACTORY PROVISIONS SHALL BE MADE FOR STREET DRAINAGE, AND NATURAL WATERCOURSES SHALL NOT BE OBSTRUCTED. DURING THE PROGRESS OF THE WORK, ALL MATERIAL PILES SHALL BE KEPT TRIMMED UP AND MAINTAINED IN A NEAT MANNER. ALL EXCAVATED WASTE MATERIAL SHALL BE REMOVED FROM THE PROJECT SITE, AS DIRECTED BY THE ENGINEER. THE WASTE SITE IS TO BE PROVIDED BY THE CONTRACTOR AT NO COST TO THE CITY, UNLESS OTHERWISE NOTED IN THE SPECIFICATIONS ALONG WITH A LETTER FROM THE PROPOSED WASTE SITE OWNER PERMITTING SUCH AND HOLDING THE CITY HARMLESS.

RESTORATION

FOR SANITARY SEWER INSTALLED, TESTED, AND ACCEPTED UP TO MAY 15TH OF ANY CALENDER YEAR, RESTORATION SHALL BE COMPLETED BY JUNE 30th OF THAT YEAR. FOR INSTALLATION OF SANITARY SEWER TESTED AND ACCEPTED FROM MAY 15th TO SEPTEMBER 30th OF ANY CALENDER YEAR, RESTORATION SHALL BE COMPLETED BY NOVEMBER 15th OF THAT CALENDER YEAR. FOR SANITARY SEWER INSTALLED, TESTED, AND ACCEPTED AFTER NOVEMBER 15TH OF ANY CALENDER YEAR, RESTORATION SHALL BE COMPLETED BY MAY 15th OF THE NEXT CALENDER YEAR.

PAVEMENT CROSSINGS WILL RECEIVE TYPE C PAVEMENT REPLACEMENT WITH FULL WIDTH PAVEMENT OVERLAY.

CONTRACTOR TO REPLACE ALL PAVEMENT MARKINGS, WITH THE COST TO BE INCLUDED IN THE UNIT PRICE BID FOR PAVEMENT.

CONTRACTOR TO USE HOT APPLIED JOINT CRACK SEALER ON ASPHALT PAVEMENT AT ALL ENDS AND INTERSECTIONS.

ALL TRENCHES IN ROAD RIGHT OF WAY WILL RECEIVE FULL DEPTH PREMIUM GRANULAR BACKFILL.

PAYMENT FOR THE OPERATIONS DESCRIBED ABOVE SHALL BE INCLUDED IN THE CONTRACT PRICE FOR THE PERTINENT 603 CONDUIT ITEM.

REMOVAL AND RELOCATION OF EXISTING UTILITIES

THE CONTRACTOR IS REQUIRED TO COOPERATE WITH EACH RESPECTIVE UTILITY OWNER FOR THE REMOVAL AND RELOCATION OF ANY AND ALL UTILITIES THAT CREATE A CONFLICT WITH CONSTRUCTION OF THE PROJECT.

ITEM 623, CONSTRUCTION STAKING

CONTRACTOR IS RESPONSIBLE FOR ALL CONSTRUCTION LAYOUT. THIS WORK IS TO BE PAID UNDER ITEM 623 CONSTRUCTION STAKING.

CROSSING OR CONNECTING TO EXISTING PIPES AND UTILITIES

WHERE PLANS PROVIDE FOR A PROPOSED CONDUIT TO BE CONNECTED TO, OR CROSS OVER OR UNDER AN EXISTING SEWER OR UNDERGROUND UTILITY, THE CONTRACTOR SHALL LOCATE THE EXISTING PIPES OR UTILITIES BOTH AS TO LINE AND GRADE BEFORE STARTING TO LAY THE PROPOSED CONDUIT.

IF IT IS DETERMINED THAT THE ELEVATION OF THE EXISTING CONDUIT, OR EXISTING APPURTENANCE TO BE CONNECTED, DIFFERS FROM THE PLAN ELEVATION OR RESULTS IN A CHANGE IN THE PLAN CONDUIT SLOPE, THE ENGINEER SHALL BE NOTIFIED BEFORE STARTING CONSTRUCTION OF ANY PORTION OF THE PROPOSED CONDUIT WHICH WILL BE AFFECTED BY THE DIFFERENCE IN THE EXISTING ELEVATIONS.

IF IT IS DETERMINED THAT THE PROPOSED CONDUIT WILL INTERSECT AN EXISTING SEWER OR UNDERGROUND UTILITY IF CONSTRUCTED AS SHOWN ON THE PLANS, THE ENGINEER SHALL BE NOTIFIED BEFORE STARTING CONSTRUCTION OF ANY PORTION OF THE PROPOSED CONDUIT WHICH WOULD BE AFFECTED BY THE INTERFERENCE WITH AN EXISTING FACILITY.

ALL CONNECTIONS TO EXISTING PIPES AND STRUCTURES SHALL BE BY THE USE OF FERNCOS OR APPROVED EQUAL.

PAYMENT FOR THE OPERATIONS DESCRIBED ABOVE SHALL BE INCLUDED IN THE CONTRACT PRICE FOR THE PERTINENT 603 CONDUIT ITEM.

REVIEW OF SANITARY AND DRAINAGE FACILITIES

AN INSPECTION OF ALL EXISTING SEWERS WHICH ARE TO REMAIN IN SERVICE AND WHICH MAY BE AFFECTED BY THE WORK SHALL BE COMPLETED BEFORE AND AFTER WORK HAS COMMENCED. FINAL ACCEPTANCE BY THE CITY OF MASSILLON WILL NOT OCCUR UNTIL AFTER SAID INSPECTION. THE CONDITION OF THE EXISTING CONDUITS AND THEIR APPURTENANCES SHALL BE DETERMINED FROM FIELD OBSERVATIONS. RECORDS OF THE OBSERVATIONS SHALL BE PROVIDED IN WRITING BY THE CONTRACTOR TO THE CITY OF MASSILLON.

ALL NEW CONDUITS, INLETS, CATCH BASINS, AND MANHOLES CONSTRUCTED AS A PART OF THE PROJECT SHALL BE FREE OF ALL FOREIGN MATTER AND IN A CLEAN CONDITION BEFORE THE PROJECT WILL BE ACCEPTED BT THE CITY OF MASSILLON.

ALL EXISTING SEWERS INSPECTED INITIALLY BY THE ABOVE MENTIONED PARTIES SHALL BE MAINTAINED AND LEFT IN A CONDITION REASONABLY COMPARABLE TO THAT DETERMINED BY THE ORIGINAL INSPECTION. ANY CHANGE IN THE CONDITION RESULTING FROM THE CONTRACTOR'S OPERATIONS SHALL BE CORRECTED BY THE CONTRACTOR TO THE SATISFACTION OF THE ENGINEER.

PAYMENT FOR ALL OPERATIONS DESCRIBED ABOVE SHALL BE INCLUDED IN THE CONTRACT PRICE FOR THE PERTINENT 603 CONDUIT ITEMS.

ITEM 407, TACK COAT

THE RATE OF APPLICATION OF THE 407 TACK COAT SHALL BE SUBJECT TO ADJUSTMENT AS DIRECTED BY THE ENGINEER. QUANTITIES INDICATE AN AVERAGE APPLICATION RATE OF 0.08 GALLONS PER SQUARE YARD OF TACK COAT FOR ESTIMATING PURPOSES ONLY.

ITEM 408, BITUMINOUS PRIME COAT

THE RATE OF APPLICATION OF THE 408 PRIME COAT SHALL BE SUBJECT TO ADJUSTMENT AS DIRECTED BY THE ENGINEER. QUANTITIES INDICATE AN AVERAGE APPLICATION RATE OF 0.40 GALLONS PER SQUARE YARD OF PRIME COAT FOR ESTIMATING PURPOSES ONLY.

DRAWN BY:	CHECKED BY:
FPW	KAD
DATE: JULY, 2008	DATE: JULY, 2008

32nd St NW Bridge Replacement
General Notes
City of Massillon
Stark County, Ohio

Francis H. Cicchinelli, Jr.
Mayor
Massillon
Means More!

REVISIONS:

DATE	DESCRIPTION

ELECTRONIC FILE NAME:
32NDgnote1.dwg

ACCOUNT NUMBER
08BR01

SANITARY SEWER SPECIFICATIONS

SANITARY SEWER CONSTRUCTION PROPOSED FOR THIS PROJECT SHALL CONFORM TO THE LATEST CITY OF MASSILLON STANDARD CONSTRUCTION AND MATERIALS SPECIFICATIONS, TEN STATE STANDARDS, AND THE LATEST EDITION OF THE ODOT CMS, OR MODIFIED BY THE CONTRACT DRAWINGS. IF A CONFLICT ARISES BETWEEN SAID STANDARDS IT SHALL BE AT THE DISCREATION OF THE CITY ENGINEER AS TO WHICH STANDARD SHALL GOVERN. THE PROJECT CONTRACT DRAWINGS SHALL GOVERN UNLESS NOTED OTHERWISE.

SANITARY GRAVITY SEWER PIPE AND FITTINGS SHALL BE PVC SDR 35 CONFORMING TO ASTM D–3034 UNLESS OTHERWISE NOTED. PVC COMPOUNDS SHALL CONFORM TO ASTM D–1784 PVC PIPE AND FITTINGS SHALL HAVE BELL AND SPIGOT TYPE JOINTS CONFORMING TO ASTM D–3212 AND GASKETS CONFORMING TO ASTM F–477

BACKFILL IN SEWER TRENCHES SHALL BE PLACED IN LAYERS SUFFICIENT TO MEET THE COMPACTION REQUIREMENT OF 100% OF MAXIMUM LABORATORY DRY DENSITY PER ASTM D–698 AND THOROUGHLY COMPACTED WITH MACHINE MOUNDED COMPACTION EQUIPMENT. THE PLACING OF BACKFILL MATERIAL SHALL BE CONTINUED UNTIL THE TRENCH IS ENTIRELY FILLED AND COMPACTED TO THE GRADE CALLED FOR ON THE CONTRACT DRAWINGS. EXCAVATED MATERIAL CONFORMING TO ODOT ITEM 203 SHALL BE USED FOR BACKFILLING EXISTING STRUCTURES (AFTER REMOVAL) ONLY. CRUSHED GRAVEL CONFORMING TO GRADATION REQUIREMENTS OF ODOT ITEM 304 AS SHOWN IN ODOT TABLE 703–1 SHALL BE USED FOR BACKFILLING ALL SEWER TRENCHES, AREAS SHOWN ON THE PLANS AND AS DIRECTED BY THE CITY ENGINEER. FLOODING, JETTING, OR PUDDLING OF BACKFILL MATERIAL WILL NOT BE PERMITTED. COMPACTION TESTING OF THE BACKFILL BY A GEOTECHNICAL ENGINEER MAY BE REQUIRED BY THE OWNER AT THE EXPENSE OF THE CONTRACTOR.

SANITARY SEWERS SHALL BE AIR TESTED FOR LEAKAGE AND MANDREL TESTED FOR DEFLECTION. THE MAXIMUM ALLOWABLE PIPE DEFLECTION SHALL BE 5%.

PRIOR TO FINAL PAYMENT FOR AND ACCEPTANCE OF SANITARY SEWER INSTALLATION THE RESULTS OF THE AIR PRESSURE TESTS, TELEVISION TESTS AND MADREL TESTS SHALL BE FORWARDED TO THE CITY ENGINEER.

DEFLECTION TESTING

MAXIMUM ALLOWABLE PIPE DEFLECTION (REDUCTION IN VERTICAL INSIDE DIAMETER) SHALL BE 5%. DEFLECTION TESTS OF PIPE SHALL BE PERFORMED NOT SOONER THAN 30 DAYS AFTER THE BACKFILL HAS BEEN PLACED AND BEFORE FINAL ACCEPTANCE. LOCATIONS WITH EXCESS DEFLECTION SHALL BE EXCAVATED AND REPAIRED BY RE–BEDDING OR REPLACEMENT OF THE PIPE AT THE CONTRACTOR'S EXPENSE. DEVICES FOR TESTING INCLUDE A DEFLECTOMETER METER, OR PROPERLY SIZED "60, NO–GO" MANDREL OR SEWER BALL. THE DEFLECTION TESTING MUST BE CONDUCTED WITHOUT MECHANICAL PULLING DEVICES. FOR THE PURPOSE OF DEFLECTION MEASUREMENTS, THE BASE INSIDE PIPE DIAMETERS WITHOUT DEFLECTION ARE PROVIDED IN TABLE A. THE MAXIMUM ALLOWABLE DEFLECTION SHALL BE APPLIED TO THE BASE INSIDE DIAMETER IN DETERMINING THE MINIMUM PERMISSIBLE DIAMETER. IT MUST BE EMPHASIZED THAT TO INSURE ACCURATE TESTING, THE LINES MUST BE THOROUGHLY CLEANED.

TABLE A
INSIDE DIAMETERS FOR DEFLECTION MEASUREMENTS
OF ASTM D 3034 SDR 35 / SDR 21 PVC SEWER PIPE

SIZE	SDR	AVG. O.D.	t	1.06t or t'	AVG. I.D.	TOLERANCE	BASE I.D.	DEFLECTION MANDREL
6"	35	6.275	0.241	0.255	5.764	0.102	5.662	5.38
8"	35	8.400	0.323	0.342	7.715	0.127	7.588	7.21
10"	35	10.500	0.404	0.428	9.644	0.153	9.491	9.02

TELEVISION TESTING

ALL SANITARY SEWERS, 8–INCH DIAMETER AND LARGER, MUST PASS AN INTERNAL TELEVISION INSPECTION. THE CONTRACTOR SHALL PROVIDE COMPLETE INTERNAL INSPECTION VIDEOTAPE TO THE CITY OF MASSILLON ENGINEERING DEPARTMENT. THE VIDEOTAPING PROCEDURE SHALL BE IN ACCORDANCE WITH CITY OF MASSILLON ENGINEERING DEPARTMENT STANDARDS.

LEAKAGE TESTS

LEAKAGE TESTS SHALL BE SPECIFIED. THIS MAY INCLUDE APPROPRIATE WATER OR LOW PRESSURE AIR TESTING. THE TESTING METHODS SELECTED SHOULD TAKE INTO CONSIDERATION THE RANGE IN GROUNDWATER ELEVATIONS DURING THE TEST AND ANTICIPATED DURING THE DESIGN LIFE OT THE SEWER COMPLETED AND ACCEPTED.

WATER (HYDROSTATIC) TEST

THE LEAKAGE EXFILTRATION OR INFILTRATION SHALL NOT EXCEED 100 GALLONS PER INCH OF PIPE DIAMETER PER MILE PER DAY [9L/(MM OF PIPE DIAMETER KM D)] FOR ANY SECTION OF THE SYSTEM. AN EXFILTRATION OR INFILTRATION TEST SHALL BE PERFORMED WITH A MINIMUM POSITIVE HEAD OF 2 FEET (0.6 M).

AIR TESTING AS PER ASTM F1417

AIR TESTING WILL BE CONDUCTED AS THE PROJECT IS BEING INSTALLED. AT NO TIME WILL MORE THAN 900 FEET OF PIPE BE INSTALLED BEFORE AIR TESTING IS PERFORMED. SEWAGE WILL NOT BE DIVERTED TO ANY SECTION OF PIPE, REGARDLESS OF LENGTH, UNTIL ALL TESTING IS COMPLETED AND ACCEPTED.

AFTER BACKFILLING A MANHOLE TO MANHOLE REACH OF SANITARY SEWER LINE, THE CONTRACTOR SHALL, AT HIS EXPENSE, CONDUCT THE LINE ACCEPTANCE TESTS. THE TESTS SHALL BE PERFORMED ACCORDING TO THE STATED PROCEDURES AND UNDER THE SUPERVISION OF THE CITY ENGINEER OR HIS REPRESENTATIVE.

EQUIPMENT USED SHALL MEET THE FOLLOWING MINIMUM REQUIREMENTS AND BE APPROVED BY THE ENGINEER:

1. PNEUMATIC PLUGS SHALL HAVE A SEALING LENGTH EQUAL TO OR A GREATER THAN THE DIAMETER OF THE PIPE BEING INSPECTED.
2. PNEUMATIC PLUGS SHALL RESIST INTERNAL TEST PRESSURES WITHOUT REQUIRED EXTERNAL BRACING OR BLOCKING.
3. ALL AIR USED SHALL PASS THROUGH A SINGLE CONTROL PANEL.
4. THREE INDIVIDUAL HOSES SHALL BE USED FOR THE FOLLOWING CONNECTIONS:
   a. FROM CONTROL PANEL TO PNEUMATIC PLUGS FOR INFLATION.
   b. FROM CONTROL PANEL TO SEALED LINE FOR INTRODUCING THE LOW PRESSURE AIR.
   c. FROM SEALED LINE TO CONTROL PANEL FOR CONTINUALLY MONITORING AIR PRESSURE RISE IN THE SEALED LINE.

TEST EQUIPMENT TESTING PROCEDURES SHALL BE AS FOLLOWS:
ALL PNEUMATIC PLUGS SHALL BE SEAL TESTED BEFORE BEING USED IN THE ACTUAL TEST INSTALLATION. ONE LENGTH OF PIPE SHALL BE LAID ON THE GROUND AN SEALED AT BOTH ENDS WITH THE PNEUMATIC PLUGS TO BE CHECKED. THE SEALED PIPE SHALL BE PRESSURED TO 5 PSIG. THE PLUGS MUST HOLD AGAINST THIS PRESSURE WITHOUT HAVING TO BE BRACED.

AFTER A MANHOLE TO MANHOLE REACH OF PIPE HAS BEEN BACKFILLED AND CLEANED, AND THE PNEUMATIC PLUGS ARE CHECKED BY THE ABOVE PROCEDURE, THE PLUGS SHALL BE PLACED IN THE LINE AT EACH MANHOLE. LOW PRESSURE AIR SHALL BE SLOWLY INTRODUCED INTO THIS SEALED LINE UNTIL THE INTERNAL AIR PRESSURE REACHES APPROXIMATELY 4 PSIG.

AT LEAST TWO MINUTES SHALL BE ALLOWED FOR THE AIR PRESSURE TO STABILIZE. WHEN THE PRESSURE HAS STABILIZED AND IS AT OR ABOVE 3.5 PSIG, THE AIR HOSE FROM THE CONTROL PANEL TO THE AIR SUPPLY SHALL BE DISCONNECTED. THE PORTION OF THE LINE BEING TESTED SHALL BE TERMED "ACCEPTABLE" IF THE TIME REQUIRED IN MINUTES FOR THE PRESSURE TO DECREASE FROM 3.5 TO 2.5 PSIG (GREATER THEN THE AVERAGE BACK PRESSURE OF ANY GROUNDWATER THAT MAY BE OVER THE PIPE) SHALL NOT BE LESS THAN THE TIME SHOWN FOR THE GIVEN DIAMETERS IN THE FOLLOWING TABLE:

PIPE DIAMETER IN.	MINIMUM TIME MINUTES	LENGTH FOR MINUTES TIME, FT.	TIME FOR LONGER LENGTH, S	SPECIFICATION TIME LENGTH (L) SHOWN, MINUTES							
				100 FT.	150 FT.	200 FT.	250 FT.	300 FT.	350 FT.	400 FT.	450 FT.
4	3:46	597	0.380 L	3:46	3:46	3:46	3:46	3:46	3:46	3:46	3:46
6	5:40	398	0.854 L	5:40	5:40	5:40	5:40	5:40	5:40	5:42	6:24
8	7:34	298	1.520 L	7:34	7:34	7:34	7:36	7:36	8:52	10:08	11:24
10	9:26	239	2.374 L	9:26	9:26	9:26	9:53	11:52	13:51	15:49	17:48
12	11:20	198	3.416 L	11:20	11:20	11:24	14:15	17:05	19:56	22:47	25:38
15	14:10	159	6.342 L	14:10	14:10	17:46	22:15	26:42	31:09	35:36	40:04
18	17:0	133	7.692 L	17:00	19:13	25:38	32:09	38:27	44:52	51:16	57:41
21	19:50	114	10.470 L	19:50	26:10	36:54	43:37	52:21	81:00	69:48	78:31
24	22:40	99	13.674 L	22:47	34:11	45:34	56:58	68:22	79:46	91:10	102:33
27	25:30	88	17.306 L	28:51	43:16	57:41	72:07	86:32	100:57	115:22	129:48
30	28:20	80	21.366 L	35:37	53:25	71:13	89:02	106:50	124:38	142:26	160:15
33	31:10	72	25.852 L	49:05	64:38	86:10	107:43	129:16	150:43	172:21	193:53
36	34:00	66	30.768 L	51:17	76:55	102:34	128:12	153:50	170:29	205:07	230:46

IN AREAS WHERE GROUND WATER IS KNOWN TO EXIST, THE CONTRACTOR SHALL INSTALL A 1/2 INCH DIAMETER CAPPED PIPE NIPPLE APPROXIMATELY 10 INCHES LONG, THROUGH THE MANHOLE WALL ON TOP OF ONE OF THE SANITARY SEWER LINES ENTERING THE MANHOLE. THIS SHALL BE DONE AT THE TIME THE SANITARY SEWER LINE IS INSTALLED. IMMEDIATELY PRIOR TO THE PERFORMANCE OF THE LINE ACCEPTABILITY TEST, THE GROUND WATER SHALL BE DETERMINED BY REMOVING THE PIPE CAP, BLOWING AIR THROUGH THE PIPE NIPPLE IN THE GROUND SO AS TO CLEAR IT, AND THEN CONNECTING A CLEAR PLASTIC TUBE TO THE NIPPLE. THE PLASTIC TUBE SHALL BE VERTICAL AND A MEASUREMENT OF THE HEIGHT, IN FEET OF WATER OVER THE INVERT OF THE PIPE, SHALL BE TAKEN AFTER THE WATER HAS STOPPED RISING IN THIS PLASTIC TUBE. AIR TEST PRESSURE IS TO BE INCREASED BY 0.433 PSI FOR EACH FOOT THE GROUND WATER IS ABOVE THE INVERT OF THE SEWER LINE BEING TESTED. THE ALLOWABLE DROP OF ONE POUND AND THE TIMING OF THE TEST REMAIN THE SAME.

IF A LINE ACCEPTABILITY TEST IS BEING CONDUCTED ON MORE THAN ONE MANHOLE REACH OF PIPE, THE ENTIRE SECTION BEING TESTED SHALL MEET THE LINE ACCEPTABILITY REQUIREMENTS AS IF ONLY ONE (1) OF THE MANHOLE REACHES IN THE SECTION WERE BEING TESTED.

NEGATIVE AIR PRESSURE (VACUUM) TESTING OF MANHOLES AS PER ASTM C–1244

PREPARATION OF THE MANHOLE:

A. ALL LIFT HOLES SHALL BE PLUGGED.

B. ALL PIPES ENTERING THE MANHOLE SHALL BE TEMPORARILY PLUGGED, TAKING CARE TO SECURELY BRACE THE PIPES AND PLUGS TO PREVENT THEM FROM BEING DRAWN INTO THE MANHOLE.

PROCEDURE:

A. THE TEST HEAD SHALL BE PLACED AT THE TOP OF THE MANHOLE IN ACCORDANCE WITH THE MANUFACTURER'S RECOMMENDATIONS.

B. A VACUUM OF 10 IN. OF MERCURY SHALL BE DRAWN ON THE MANHOLE, THE VALVE ON THE VACUUM LINE OF THE TEST HEAD CLOSED, AND THE VACUUM PUMP SHUT OFF. THE TIME SHALL BE MEASURED FOR THE VACUUM TO DROP TO 9 IN OF MERCURY.

C. THE MANHOLE SHALL PASS IF THE TIME FOR THE VACUUM READING TO DROP FROM 10 IN. OF MERCURY TO 9 IN. OF MERCURY MEETS OR EXCEEDS THE VALUES INDICATED IN TABLE BELOW.

MINIMUM TEST TIMES FOR MANHOLES

DEPTH (FT)	DIAMETER, IN.								
	30	33	36	42	48	54	60	66	72
	TIME, IN SECONDS								
8	11	12	14	17	20	23	26	29	33
10	14	15	18	21	25	29	33	36	41
12	17	18	21	25	30	35	39	43	49
14	20	21	25	30	35	41	46	51	57
16	22	24	39	34	40	46	52	58	67
18	25	27	32	38	45	52	59	65	73
20	28	30	35	42	50	53	65	72	81
22	31	33	39	46	55	64	72	79	89
24	33	36	42	51	59	64	78	87	97
26	36	39	46	55	64	75	85	94	105
28	39	42	49	59	69	81	91	101	113
30	42	45	53	63	74	87	98	108	121

CLEAN WATER STATEMENT

ROOF DRAINS, FOUNDATION DRAINS, AND OTHER CLEAN WATER CONNECTIONS TO THE SANITARY SEWER ARE PROHIBITED.

ITEM 659, TOPSOIL, SEEDING AND MULCHING

ITEM 659 SHALL BE APPLIED TO ALL EXPOSED SOIL AREAS DISTURBED DURING CONSTRUCTION. SUCH AS SPECIFIED IN ITEM 659 AND IS NOT LIMITED TO JUST TOPSOIL, SEEDING AND MULCHING.
THE CITY SHALL APPROVE SEED MIX PRIOR TO CONSTRUCTION TO BE USED THROUGH OUT CONSTRUCTION LIMITS. PROPOSED MIX SHALL BE SUBMITTED IN WRITING PRIOR TO ANY CONSTRUCTION. ALL ABOVE SAID WORK SHALL BE PAID FOR UNDER:

ITEM 659, SEEDING AND MULCHING LUMP SUM BID

ITEM 603SPEC – PIPE CLEANOUT

THIS WORK SHALL CONSIST OF REMOVING SEDIMENT AND DEBRIS FROM THE EXISTING CONDUITS SPECIFIED IN THE FIELD. ALL MATERIAL REMOVED SHALL BE DISPOSED OF AS PER 203.05. ALL SEWERS SHALL BE CLEANED OUT TO THE SATISFACTION OF THE ENGINEER.

CLEANOUT OF THE PIPE SHALL BE PAID FOR AT THE UNIT PRICE BID FOR ITEM SPECIAL – PIPE CLEANOUT. THIS PRICE SHALL INCLUDE THE COST FOR MATERIAL, EQUIPMENT, LABOR, AND ALL INCIDENTALS REQUIRED TO COMPLETE THE CLEANOUT.

THE FOLLOWING ESTIMATE QUANTITIES HAVE BEEN INCLUDED IN THE GENERAL SUMMARY FOR THE ABOVE NOTED WORK:

603SPEC, PIPE CLEANOUT 250 L.F.

DRAWN BY:	CHECKED BY:
FPW	KAD
DATE: JULY, 2008	DATE: JULY, 2008

32nd St. NW Bridge Replacement
General Notes
City of Massillon
Stark County, Ohio

Francis H. Cicchinelli, Jr.
Mayor
Massillon
Means More!

REVISIONS:

DATE	DESCRIPTION
11/5/2008	EROSION, LEAKAGE

FILE NAME: 32ndgnote2.dwg

ACCOUNT NUMBER 08BR01

ITEM 651, TOPSOIL STOCKPILED

THE MATERIAL FOR THIS ITEM SHALL BE OBTAINED FROM AREAS WITHIN THE PROPOSED RIGHT-OF-WAY.

PROVISION OF THIS 651 ITEM SHALL NOT BE CONSTRUED AS A WAIVER OF THE PROVISIONS OF 201.4 SOD AND INCIDENTAL TOPSOIL REMOVED ELSEWHERE ON THIS PROJECT FOR SALVAGE AND FOR USE AS DESCRIBED IN 203.04(e). THIS ITEM SHALL BE INCLUDED IN THE CONTRACT PRICE FOR VARIOUS 203 ITEMS.

DOWN SPOUTS

ALL DOWN SPOUTS UNABLE TO BE CONNECTED TO THE STORM LATERAL SHALL BE CORE DRILLED THROUGH THE CURB AS PER ENGINEER'S DIRECTION.

CURB OPENING SHALL NOT GREATER THAN A 3 1/2" DIAMETER.

THE WORK ABOVE SHALL BE INCLUDED IN THE CONTRACT PRICE FOR ITEM 609.

WORKING AREA

NO EXCAVATION WITH SIDE SLOPES STEEPER THAN 2:1 AND/OR DEEPER THAN 2' WILL BE PERMITTED. OPEN CASTINGS AND PIPES SHALL BE LEFT SECURED WHEN THE SITE IS UNATTENDED BY THE CONTRACTOR. THE CONTRACTOR SHALL SECURE ALL SUCH EXCAVATIONS, OPEN CASTINGS AND PIPES AGAINST UNAUTHORIZED ENTRY COVERING WITH STEEL PLATES, TEMPORARY BACK FILLING, FENCING AND SECURITY SERVICES SHALL BE INCLUDED IN THE PRICE BID FOR THE WORK.

EROSION CONTROL

THE CONTRACTOR SHALL PREPARE AND SUBMIT A STORM WATER POLLUTION CONTROL PLAN TO THE CITY OF MASSILLON ENGINEER TO BE FORWARDED TO THE APPROPRIATE PERMITTING AGENCIES. SAID PLAN MUST COMPLY WITH THE MOST CURRENT RULES AND REGULATIONS OF THE CITY OF MASSILLON.

CONDITIONS OF WORK

ALL WORK PERFORMED UNDER THIS CONTRACT SHALL COMPLY WITH THE U.S. DEPARTMENT OF LABOR, OCCUPATIONAL SAFETY AND HEALTH ACT, STATE, COUNTY, AND CITY OF MASSILLON LAWS AND REGULATIONS. ALL WORK, AT ALL TIMES SHALL BE SUBJECT TO OBSERVATION BY THE OWNER AND/OR ENGINEER. ALL WORK SHALL COMPLY WITH THE CONDITIONS OF THE CONTRACT DOCUMENTS, OHIO EPA, AND STANDARDS OF THE CITY OF MASSILLON. ALL ELECTRICAL WORK SHALL COMPLY WITH THE NATIONAL ELECTRICAL CODE, AND APPLICABLE CITY, COUNTY, STATE AND FEDERAL CODES.

IT SHALL BE THE RESPONSIBILITY OF THE CONTRACTOR TO MAINTAIN SAFE AND SATISFACTORY ACCESS TO ALL ABUTTING PROPERTIES TO THE PROJECT SITE. ADJACENT ROADS SHALL BE MAINTAINED AND KEPT CLEAN OF MUD AND OTHER DEBRIS THAT MAY BE CAUSED BY TRAFFIC EXITING THE WORK SITE. THE CONTRACTOR SHALL COORDINATE AND PROVIDE FOR ALL NECESSARY TRAFFIC CONTROL. TRAFFIC CONTROL SHALL BE IN ACCORDANCE WITH CURRENT CITY OF MASSILLON RULES AND REGULATIONS AND THE OHIO MANUAL OF UNIFORM TRAFFIC CONTROL DEVICES.

IT SHALL BE THE RESPONSIBILITY OF THE CONTRACTOR TO PROVIDE AND MAINTAIN FACILITIES FOR A CONSTRUCTION OFFICE, EMPLOYEE PARKING, AND EMPLOYEE SANITARY FACILITIES. ON STREET PARKING WILL NOT BE PERMITTED. THE CONTRACTOR SHALL PROVIDE FOR THE LAWFUL OFF-SITE DISPOSAL OF DEMOLITION DEBRIS AND CONSTRUCTION WASTE.

REMOVAL OF TREES OR STUMPS

ALL TREES AND STUMPS REMOVED DURING CONSTRUCTION SHALL BE UNDER THE LUMP SUM BID FOR ITEM 201, CLEARING AND GRUBBING. THIS SHALL INCLUDE ALL TREES AND STUMPS WITHIN THE CONSTRUCTION LIMITS UNLESS OTHERWISE STATED BY CITY REPRESENTATIVE.

CONCRETE REMOVAL

ALL EXISTING CONCRETE INCLUDING CURBS, DRIVES, AND BASE ETC. WITHIN WORK LIMITS SHALL BE REMOVED AND PAID FOR UNDER:

ITEM 203 EXCAVATION INCLUDING ROADWAY

MAINTENANCE OF TRAFFIC

THE CONTRACTOR SHALL SUPPLY A MAINTENANCE OF TRAFFIC PLAN TO THE CITY ENGINEER.

MAINTENANCE OF TRAFFIC PLAN MUST BE APPROVED BY THE CITY ENGINEER PRIOR TO ANY CONSTRUCTION COMMENCING.

SAID APPROVED DETOUR SHALL BE FORWARDED TO THE LOCAL NEWPAPER.

FINAL APPROVAL

PRIOR TO THE PROJECT COMMENCING AND AFTER THE FINAL INVOICE IS SUBMITTED. A VIDEO TAPE WILL BE MADE BY THE CONTRACTOR AND SUBMITTED TO THE CITY ENGINEER BEFORE FINAL ACCEPTANCE OF THE PROJECT. ANY DISCREPANCIES WILL BE RESOLVED PRIOR TO FINAL PAYMENT. AS BUILT DRAWINGS SHALL BE MAINTAINED BY THE CONTRACTOR ON SITE WITH ANY CORRECTIONS BEING RED LINED ON MYLAR DRAWINGS AND SUBMITTED TO THE CITY IN A CLEAR AND LEGIBLE MANNER PRIOR TO THE FINAL INVOICE BEING PAID.

COST OF THIS WORK SHALL BE INCLUDED IN ITEM 623 CONSTRUCTION STAKING

GENERAL SUMMARY

SHEET No. 1	SHEET No. 2	SHEET No. 4	SHEET No. 10	SHEET No. 12	SHEET No. 15	ITEM	GRAND TOTAL	UNIT	DESCRIPTION
									ROADWAY
	LUMP					201SPEC	LUMP	LUMP	CLEARING AND GRUBBING
					87	202	87	LF	GUARDRAIL REMOVAL
					LUMP	202	LUMP	LUMP	BRIDGE REMOVED
					313	202	313	LF	PIPE REMOVAL
					92	202	92	SY	CONCRETE APPROACH SLAB REMOVAL
					1	202	1	EACH	MANHOLE REMOVED
					21	202	21	SY	DRIVE REMOVAL
			52	56		203	108	CY	EXCAVATION INCLUDING ROADWAY
			5	2		203	7	CY	EMBANKMENT
									EROSION CONTROL
	LUMP					207SPEC	LUMP	LUMP	EROSION CONTROL
					41	601	41	SY	ROCK CHANNEL PROTECTION W/ FILTER
LUMP						659	LUMP	LUMP	TOPSOIL, SEEDING AND MULCHING
									PAVEMENT
		344				254	344	SY	2" PAVEMENT PLANING
		18				301	18	CY	ASPHALT CONCRETE BASE
		14				304	14	CY	AGGREGATE BASE
		45				407	45	GAL	TACK COAT
		64				408	64	GAL	PRIME COAT
		11				448	11	CY	ASPHALT CONCRETE INTERMEDIATE COURSE, TYPE 1, PG 64-22
		25				448	25	CY	ASPHALT CONCRETE SUFACE COURSE, TYPE 1, PG 64-22
					21	452SPEC	21	SY	ASPHALT DRIVE
					2	606	2	EACH	ANCHOR ASSEMBLY, TYPE T
					2	606	2	EACH	FLARED END
					37.5	606	37.5	LF	GUARDRAIL, NESTED TYPE 5 WITH TUBULAR BACKUP
					4	606	4	EACH	BRIDGE TERMINAL ASSEMBLY TYPE 4, EACH
									DRAINAGE
					8	602SPEC	8	EACH	T-WALL
	250					603SPEC	250	LF	PIPE CLEANOUT
					10	603	10	LF	18" TYPE B CONDUIT
					113	603	113	LF	24" TYPE B CONDUIT
					24	603	24	LF	PRECAST 14x4 4 SIDED CONCRETE BOX CULVERT, 706.05
					1	604	1	EACH	PRECAST DRANAGE CONCRETE MANHOLE
					1	604	2	EACH	CATCH BASIN ODOT #5
									SANITARY
						603	40	LF	6" SDR 35 CONDUIT LATERAL
					197	603	197	LF	8" SDR 35 CONDUIT SANITARY
					20	603SPEC	20	L.F.	18" STEEL CASING
					2	604	2	EACH	PRECAST SANITARY CONCRETE MANHOLE
						614SPEC	LUMP	LUMP	MAINTENANCE OF TRAFFIC
						614	LUMP	LUMP	MAINTAINING TRAFFIC
						619	LUMP	LUMP	FIELD OFFICE
LUMP						623	LUMP	LUMP	CONSTRUCTION STAKING
						624	LUMP	LUMP	MOBILIZATION

DRAWN BY:	CHECKED BY:
FPW	KAD
DATE: JULY, 2008	DATE: JULY, 2008

32nd St. NW Bridge Replacement
General Notes
City of Massillon
Stark County, Ohio

Francis H. Cicchinelli, Jr.
Mayor
Massillon
Means More!

REVISIONS:

DATE	DESCRIPTION

FILE NAME: 32NDgnotes2.dwg

ACCOUNT NUMBER 08BR01

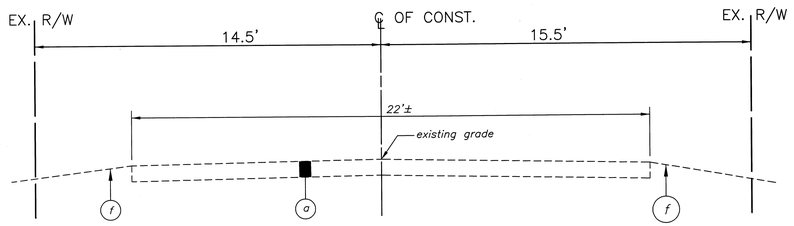

32nd St NW EXISTING TYPICAL SECTION

sta. 10+10.00 to 10+25.52
STA. 10+73.50 TO 10+90.00

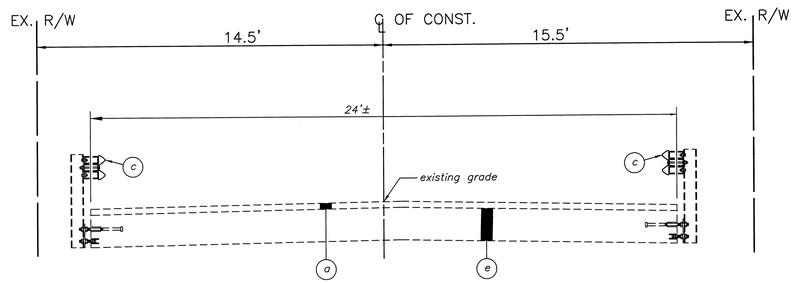

32nd St NW EXISTING TYPICAL SECTION

sta. 10+41.52 to sta. 10+57.50

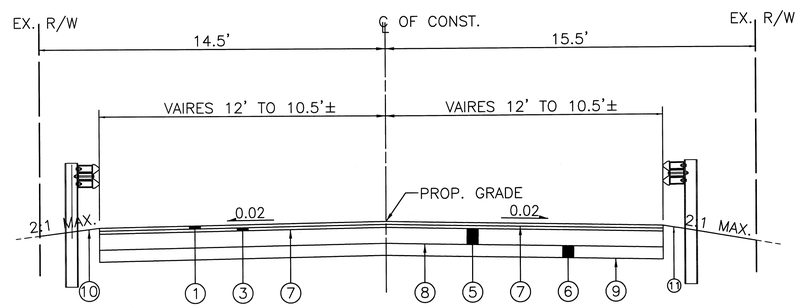

32nd St NW PROPOSED TYPICAL SECTION

STA. 10+10 TO 10+42
STA. 10+58 TO 10+90

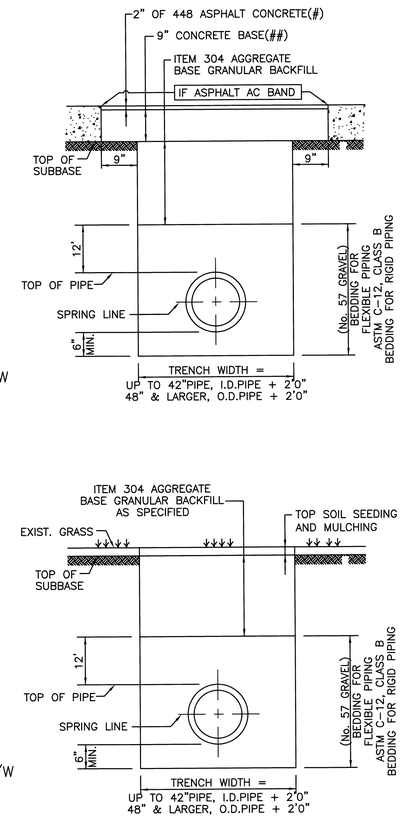

TRENCH DETAIL

CONCRETE BASE SHALL BE OF 1:2:4, 6 BAG MIX, PORTLAND CEMENT CONCRETE USING HIGH EARLY STRENGTH CEMENT AND IT MUST BE CURED AT LEAST 48 HRS.

ALL LABOR AND MATERIAL INCLUDED IN PIPE COST.

– NOT INCLUDED IN PIPE COST IF FALLS WITHIN PROPOSED RESURFACING TYPICAL SECTION OR PROPOSED TYPICAL SECTION

– NOT REQUIRED IN FULL DEPTH PAVEMENT REPLACEMENT.

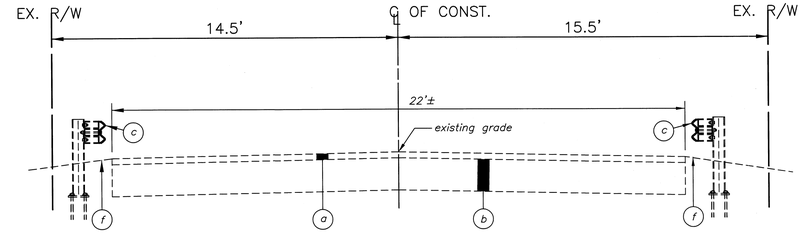

32nd St NW EXISTING TYPICAL SECTION

sta. 10+25.52 to sta. 10+41.52
sta. 10+57.50 to sta. 10+73.50

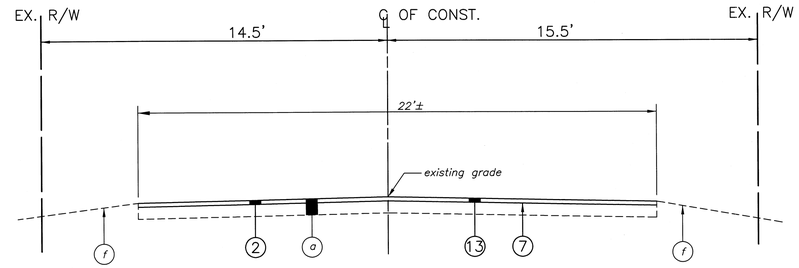

32nd St NW PROPOSED RESURFACING TYPICAL SECTION

STA. 9+30 TO 10+10
STA. 10+90 TO 11+50

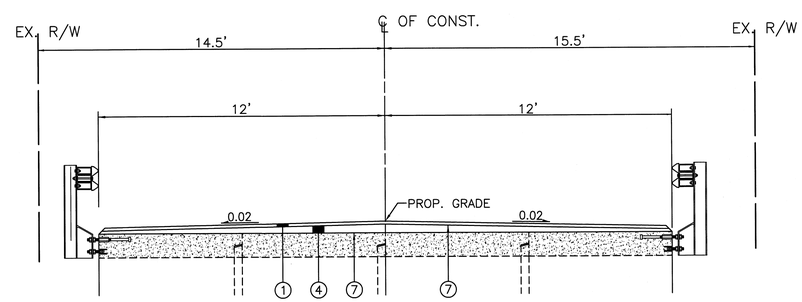

32nd St NW PROPOSED TYPICAL SECTION

STA. 10+42 TO STA. 10+58

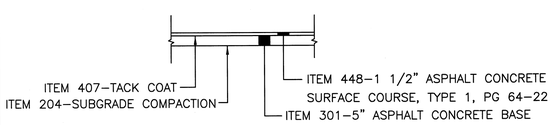

ITEM 452SPEC. ASPHALT DRIVE DETAIL

PRICE TO INCLUDE ALL ABOVE ITEMS

PROPOSED LEGEND

1 – ITEM 448–1 1/2" ASPHALT CONCRETE SURFACE COURSE, TYPE 1, PG 64–22
2 – ITEM 448–2" ASPHALT CONCRETE SURFACE COURSE, TYPE 1, PG 64–22
3 – ITEM 448–1 1/2" ASPHALT CONCRETE INTERMEDIATE COURSE, TYPE 2, PG 64–22
4 – ITEM 448–VARIES ASPHALT CONCRETE INTERMEDIATE COURSE, TYPE 2, PG 64–22
5 – ITEM 301–8" ASPHALT CONCRETE BASE
6 – ITEM 304–6" AGGREGATE BASE
7 – ITEM 407–TACK COAT
8 – ITEM 408–PRIME COAT
9 – ITEM 204–SUBGRADE COMPACTION
10 – ITEM 659SPEC–SEEDING AND MULCHING
11 – ITEM 705–HOT APPLIED JOINT SEALER(REQUIRED)
12 – ITEM 601–ROCK CHANNEL PROTECTION W/ FILTER
13 – ITEM 254–2" PAVEMENT PLANNING

EXISTING LEGEND

a – variable thickness asphalt pavement
b – reinforced concrete
c – exist. guardrail
e – bridge deck
f – exist. lawn

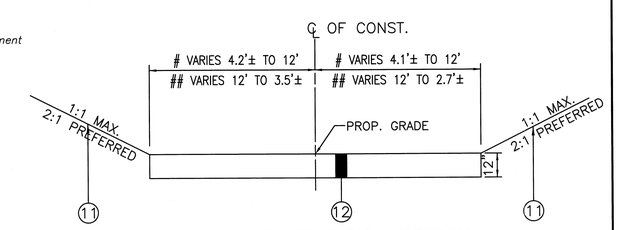

CREEK PROPOSED TYPICAL SECTION

STA. 79+73.07 TO STA. 79+88
STA. 8+12 TO STA. 8+20

SCALE VERTICAL IN FEET: 6, 3, 1.5, 0

HORIZONTAL SCALE IN FEET: 3, 1.5, 0, 3

DRAWN BY:	CHECKED BY:
FPW	KAD
DATE: JULY, 2008	DATE: JULY, 2008

32nd St NW Bridge Replacement

Typical Section
City of Massillon
Stark County, Ohio

Francis H. Cicchinelli, Jr.
Mayor

Massillon
Means More!

REVISIONS:

DATE	DESCRIPTION

ELECTRONIC FILE NAME:
32nd–typical.DWG

ACCOUNT NUMBER
08BR01

BEGIN WORK
STA. 9+30

END WORK
STA. 11+50

Vellios Company
Outlot: 211

32nd St NW – 30' R/W

Existing AT&T easement
Record OR 233–306

Existing AT&T easement
Record OR 241–658

STA. 10+50 32ND ST. NW
STA. 80+00 CREEK

Existing concrete approach slab

Anthony S. Kolic
Lot: 16326
Res. 822 32nd St NW

Zachary R. Boldizsar
Lot: 16325
Res. 828 32nd St NW

Your Pizza Shop Corp.
Lot: 16268
Comm. 3161 Lincoln Way W

= ROADWAY REMOVAL
= PIPE REMOVAL
= CONCRETE REMOVAL
= PAVEMENT PLANING

CREEK CURVE DATA	
P.I. =	STA. 79+81.07
Δ =	50°53'37" LT.
Dc =	340°50'36"
R =	16.81'
T =	8.00'
L =	14.93'
E =	1.81'
e_{max} =	NONE

CREEK CURVE DATA	
P.I. =	STA. 80+25.00
Δ =	13°00'34" LT.
Dc =	130°39'47"
R =	43.85'
T =	5.00'
L =	9.96'
E =	0.28'
e_{max} =	NONE

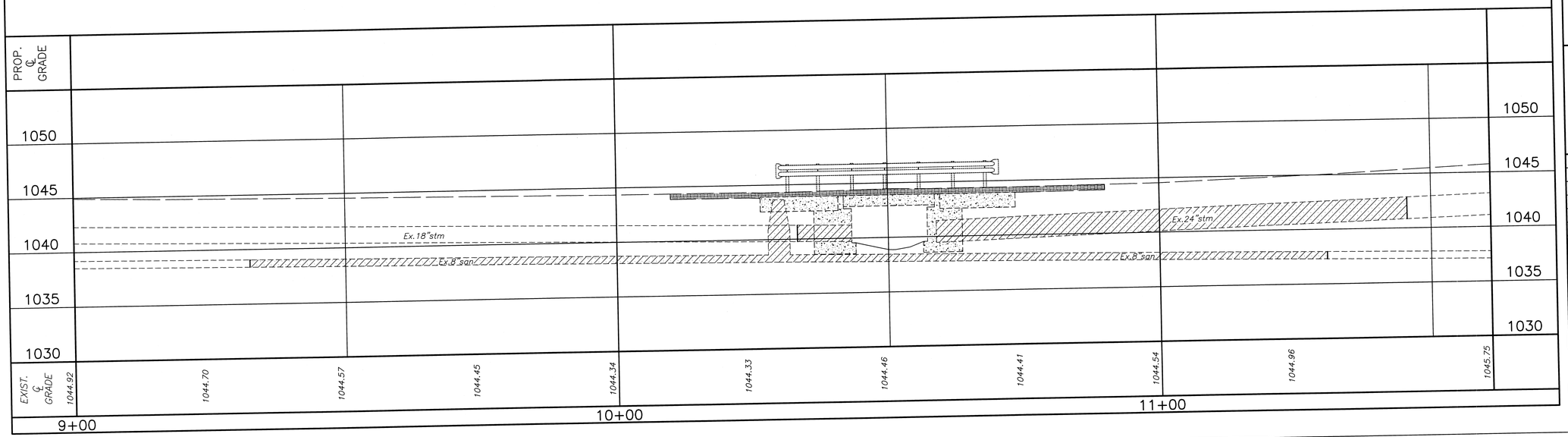

SCALE IN FEET
VERTICAL
HORIZONTAL SCALE IN FEET

DRAWN BY: FPW	CHECKED BY: KAD
DATE: July, 2008	DATE: July, 2008

32nd St NW Bridge Replacement

Existing/ Demolition Plan and Profile Removal Plan

City of Massillon
Stark County, Ohio

Francis H. Cicchinelli, Jr.
Mayor

Massillon
Means More!

REVISIONS:

DATE	DESCRIPTION

ELECTRONIC FILE NAME:
existing32ndpp.DWG

ACCOUNT NUMBER
08BR01

CONTROL			
DESCRIPTION	NORTH	EAST	ELEVATION
NAIL SET #1	412644.2510	2225676.9827	1044.23
NAIL SET #2	412592.7699	2225679.5480	1044.17
STA 10+00	412584.5363	2225686.8368	
STA. 11+00	412684.5362	2225686.6522	

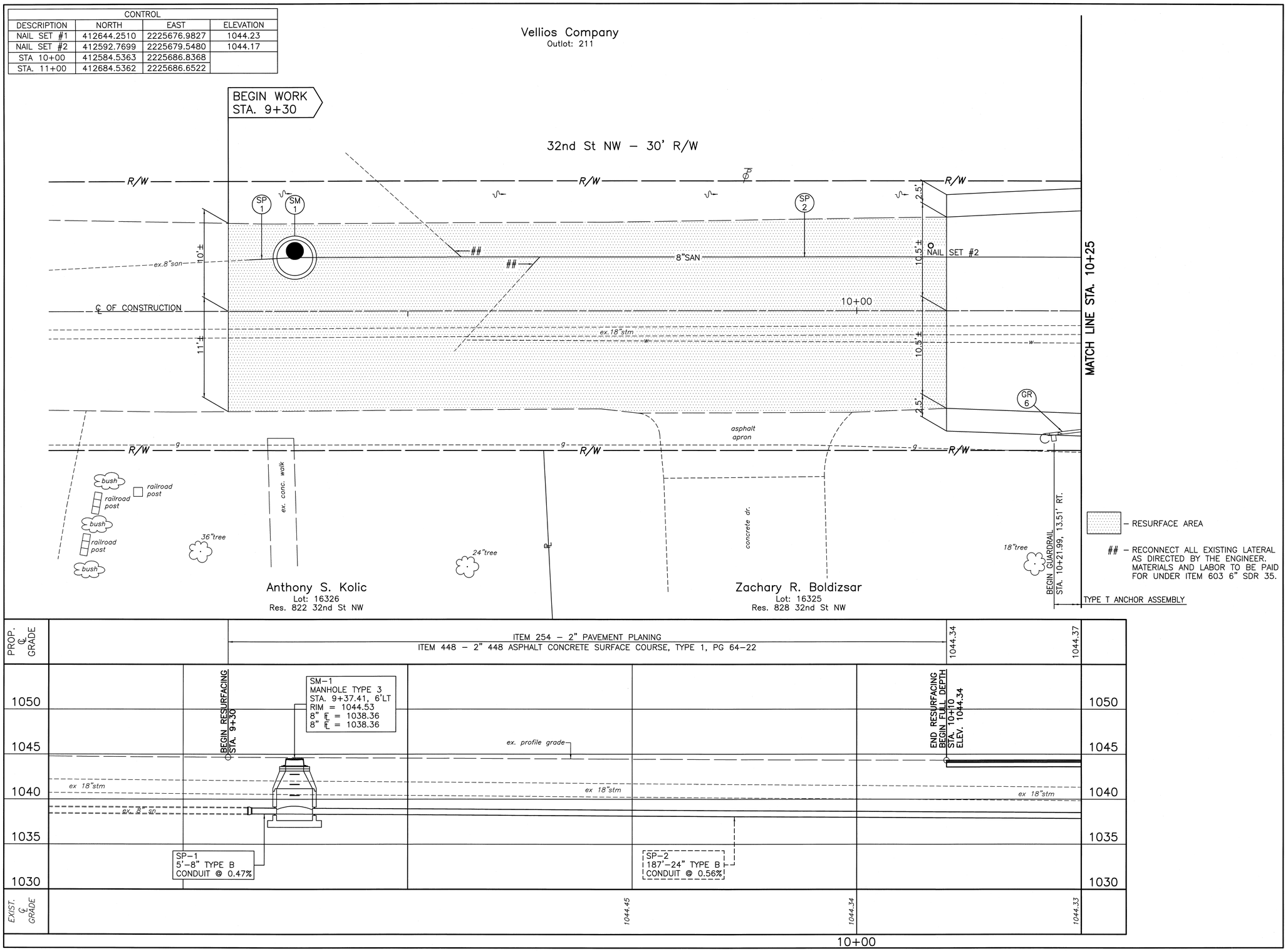

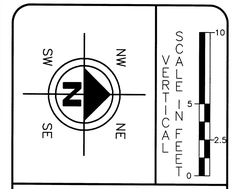

DRAWN BY:	CHECKED BY:
FPW	KAD
DATE: July, 2008	DATE: July, 2008

32nd St NW Bridge Replacement

Profile Sta. 9+10 to Sta. 10+25

City of Massillon
Stark County, Ohio

Plan and Profile

Francis H. Cicchinelli, Jr.
Mayor

Massillon
Means More!

REVISIONS:

DATE	DESCRIPTION

ELECTRONIC FILE NAME:
prop32ndpp1.DWG

ACCOUNT NUMBER
08BR01

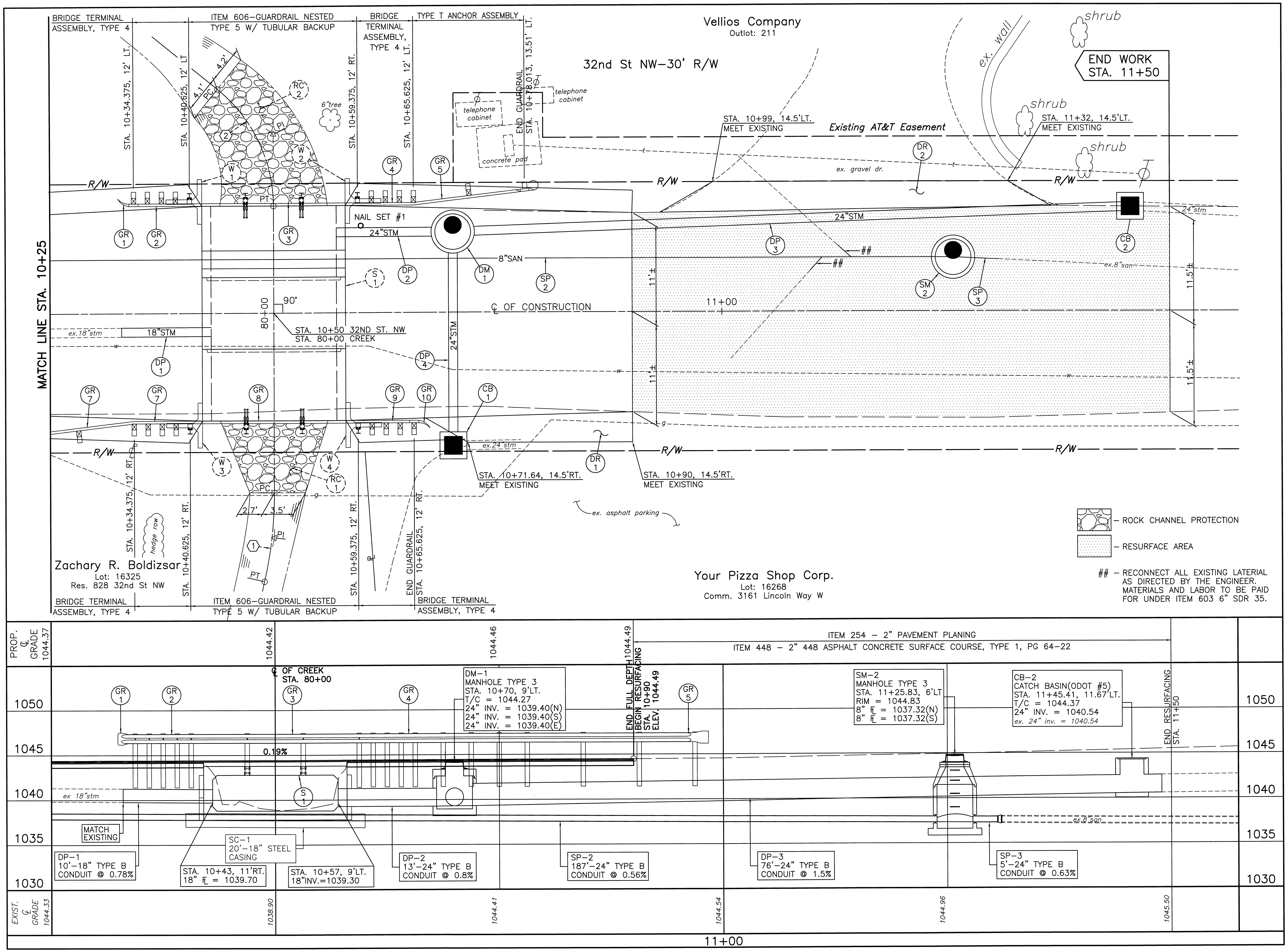

- ROCK CHANNEL PROTECTION
- RESURFACE AREA

– RECONNECT ALL EXISTING LATERIAL AS DIRECTED BY THE ENGINEER. MATERIALS AND LABOR TO BE PAID FOR UNDER ITEM 603 6" SDR 35.

VERTICAL SCALE IN FEET: 0, 2.5, 5, 10

HORIZONTAL SCALE IN FEET: 5, 2.5, 0, 5

DRAWN BY:	CHECKED BY:
FPW	KAD
DATE: July, 2008	DATE: July, 2008

32nd St NW Bridge Replacement

Plan and Profile Sta. 10+25 to Sta. 11+50

City of Massillon
Stark County, Ohio

Francis H. Cicchinelli, Jr.
Mayor

Massillon Means More!

REVISIONS:

DATE	DESCRIPTION

ELECTRONIC FILE NAME: prop32ndpp.DWG

ACCOUNT NUMBER 08BR01

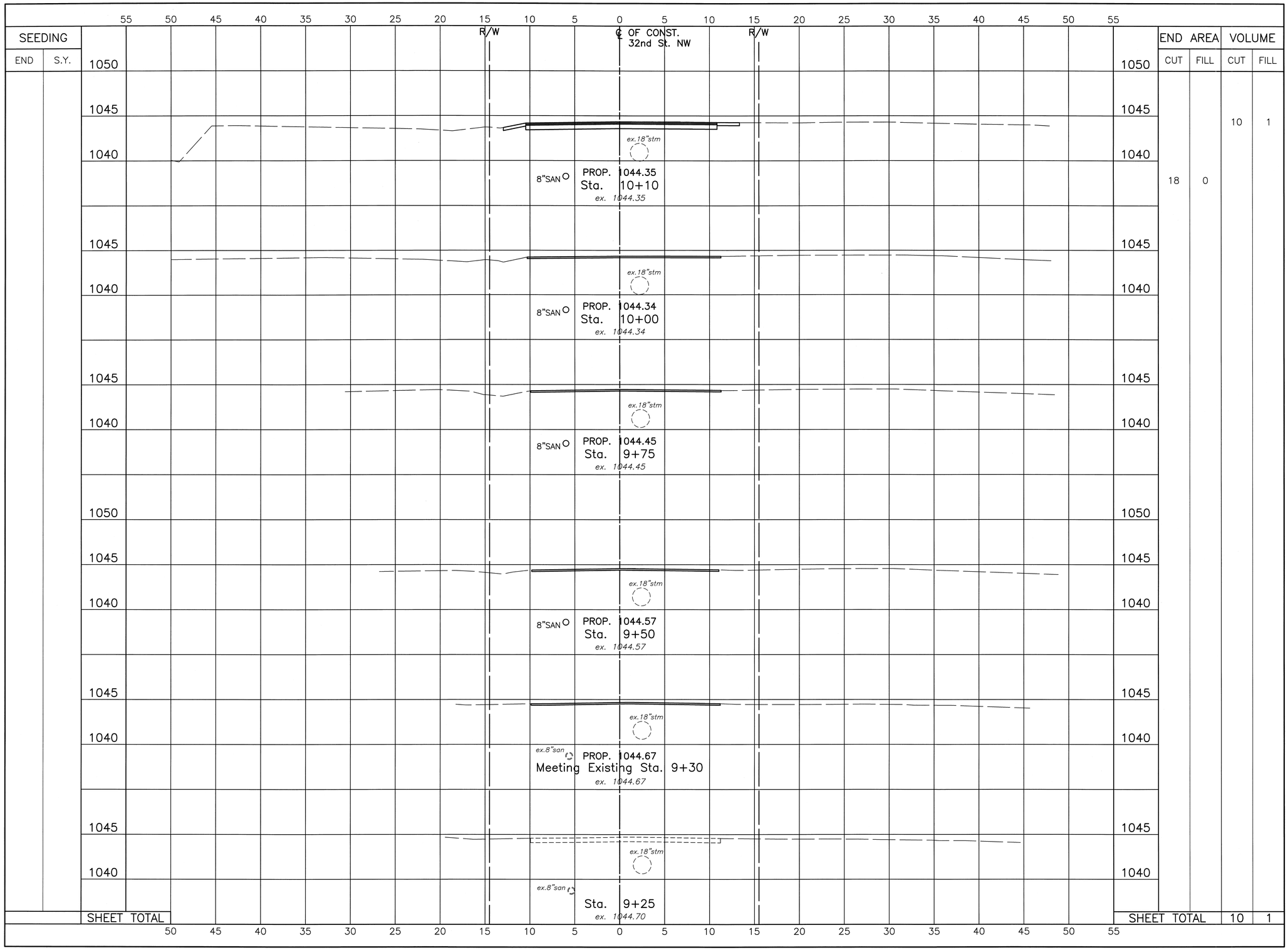

SEEDING		END AREA		VOLUME	
END	S.Y.	CUT	FILL	CUT	FILL
		18	0	10	1
SHEET TOTAL				10	1

VERTICAL SCALE IN FEET
10 5 2.5 0

HORIZONTAL SCALE IN FEET
5 2.5 0 5

DRAWN BY:	CHECKED BY:
FPW	KAD
DATE: June 2008	DATE: June 2008

32nd St. NW Bridge Replacement

32nd St NW Cross Section (Sta. 9+25 to Sta. 10+10)

City of Massillon
Stark County, Ohio

Francis H. Cicchinelli, Jr.
Mayor

Massillon
Means More!

REVISIONS:

DATE	DESCRIPTION

ELECTRONIC FILE NAME:
32ndxsec-1.DWG

ACCOUNT NUMBER
08BR01

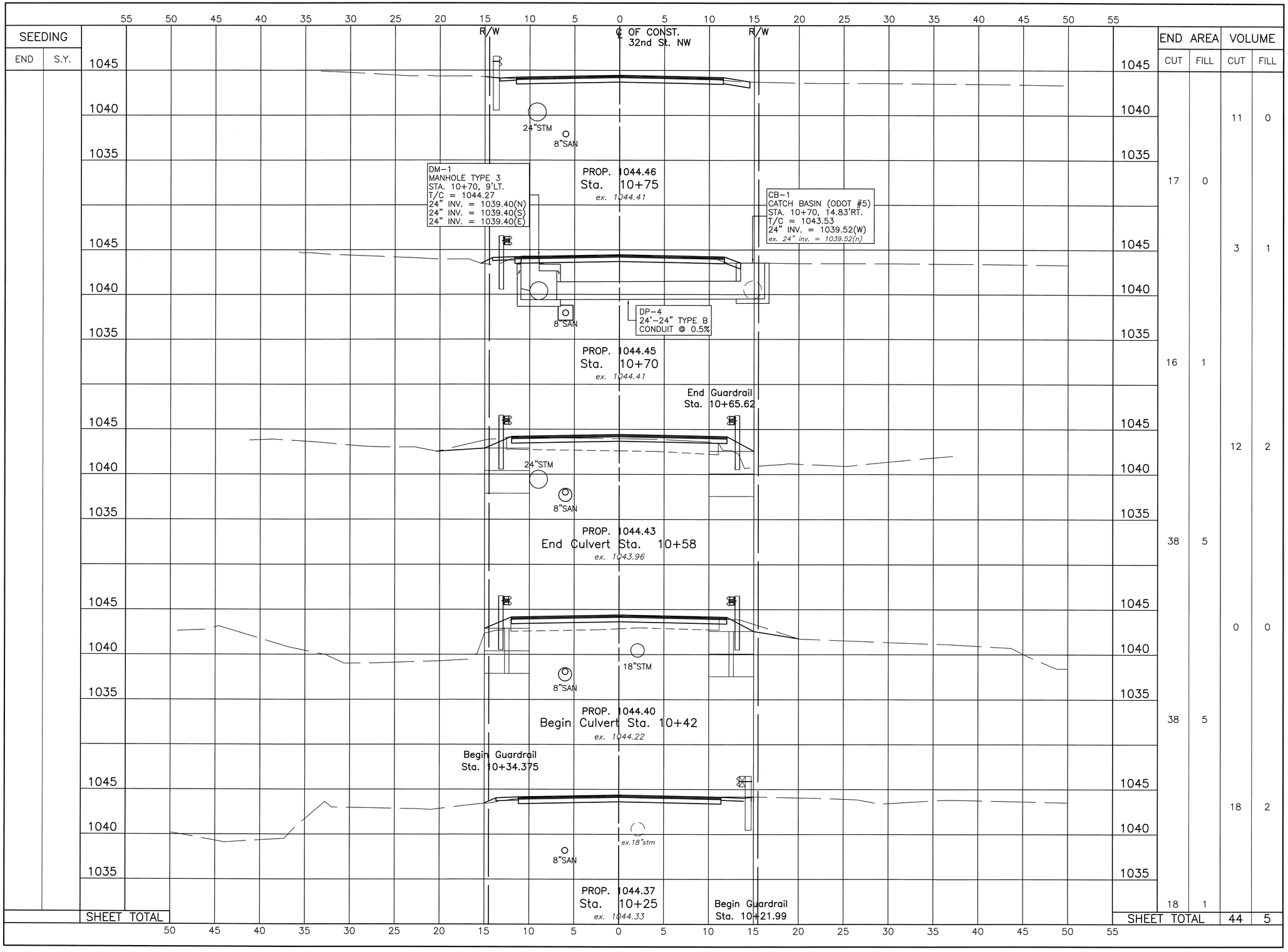

SEEDING END	SEEDING S.Y.	END AREA CUT	END AREA FILL	VOLUME CUT	VOLUME FILL
		17	0	11	0
		16	1	3	1
		38	5	12	2
		38	5	0	0
		18	1	18	2
SHEET TOTAL				44	5

VERTICAL SCALE IN FEET: 10, 5, 2.5, 0

HORIZONTAL SCALE IN FEET: 5, 2.5, 0, 5

DRAWN BY:	CHECKED BY:
FPW	KAD
DATE: July 2008	DATE: July 2008

32nd St. NW Bridge Replacement

32nd St NW Cross Section (Sta. 10+25 to Sta. 10+75)

City of Massillon
Stark County, Ohio

Francis H. Cicchinelli, Jr.
Mayor

Massillon
Means More!

REVISIONS:

DATE	DESCRIPTION

ELECTROINIC FILE NAME: 32ndxsec1.DWG

ACCOUNT NUMBER 08BR01

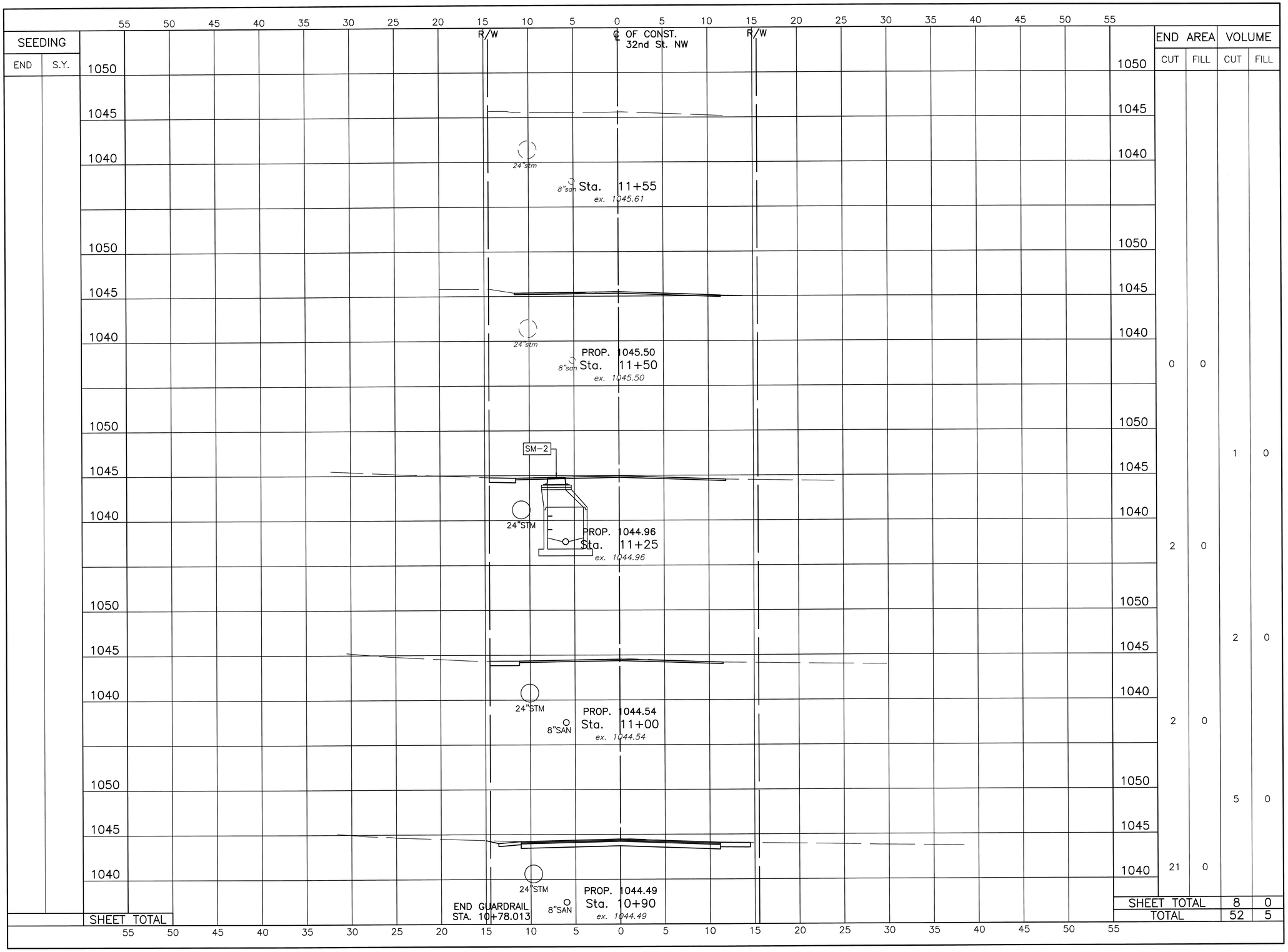

END AREA		VOLUME	
CUT	FILL	CUT	FILL
0	0		
		1	0
2	0		
		2	0
2	0		
		5	0
21	0		
SHEET TOTAL		8	0
TOTAL		52	5

VERTICAL SCALE IN FEET
10 5 2.5 0

5 2.5 0 5
HORIZONTAL SCALE IN FEET

DRAWN BY:	CHECKED BY:
FPW	KAD
DATE: June 2008	DATE: June 2008

32nd St. NW Bridge Replacement

32nd St NW Cross Section (Sta. 10+00 to Sta. 11+55)

City of Massillon
Stark County, Ohio

Francis H. Cicchinelli, Jr.
Mayor

Massillon
Means More!

REVISIONS:

DATE	DESCRIPTION

ELECTRONIC FILE NAME:
32ndxsec1.DWG

ACCOUNT NUMBER
08BR01

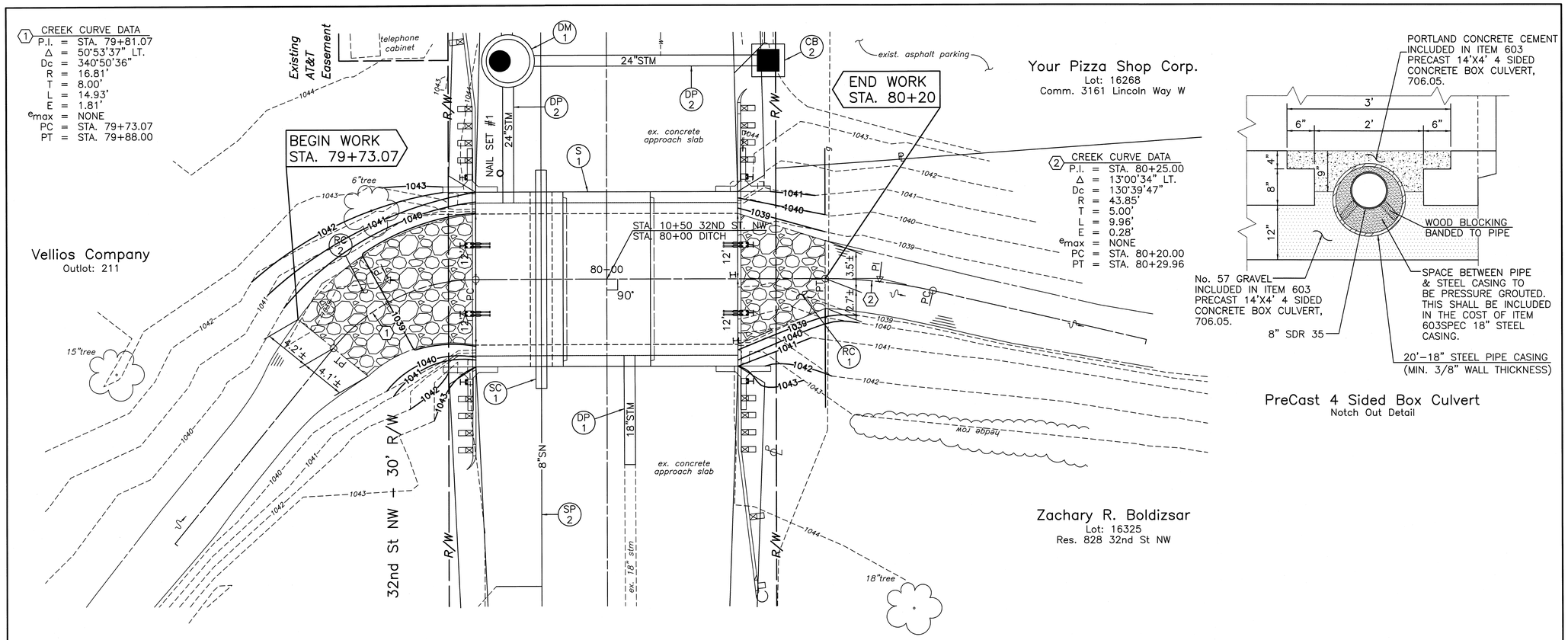

PreCast 4 Sided Box Culvert
Notch Out Detail

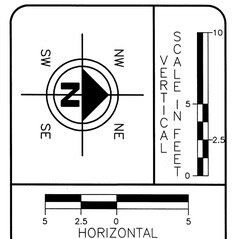

DRAWN BY:	CHECKED BY:
FPW	KAD
DATE: July, 2008	DATE: July, 2008

32nd St NW Bridge Replacement

Ditch Plan and Profile

City of Massillon
Stark County, Ohio

Francis H. Cicchinelli, Jr.
Mayor

Massillon
Means More!

REVISIONS:

DATE	DESCRIPTION

ELECTROINIC FILE NAME:
prop32ndpp.DWG

ACCOUNT NUMBER
08BR01

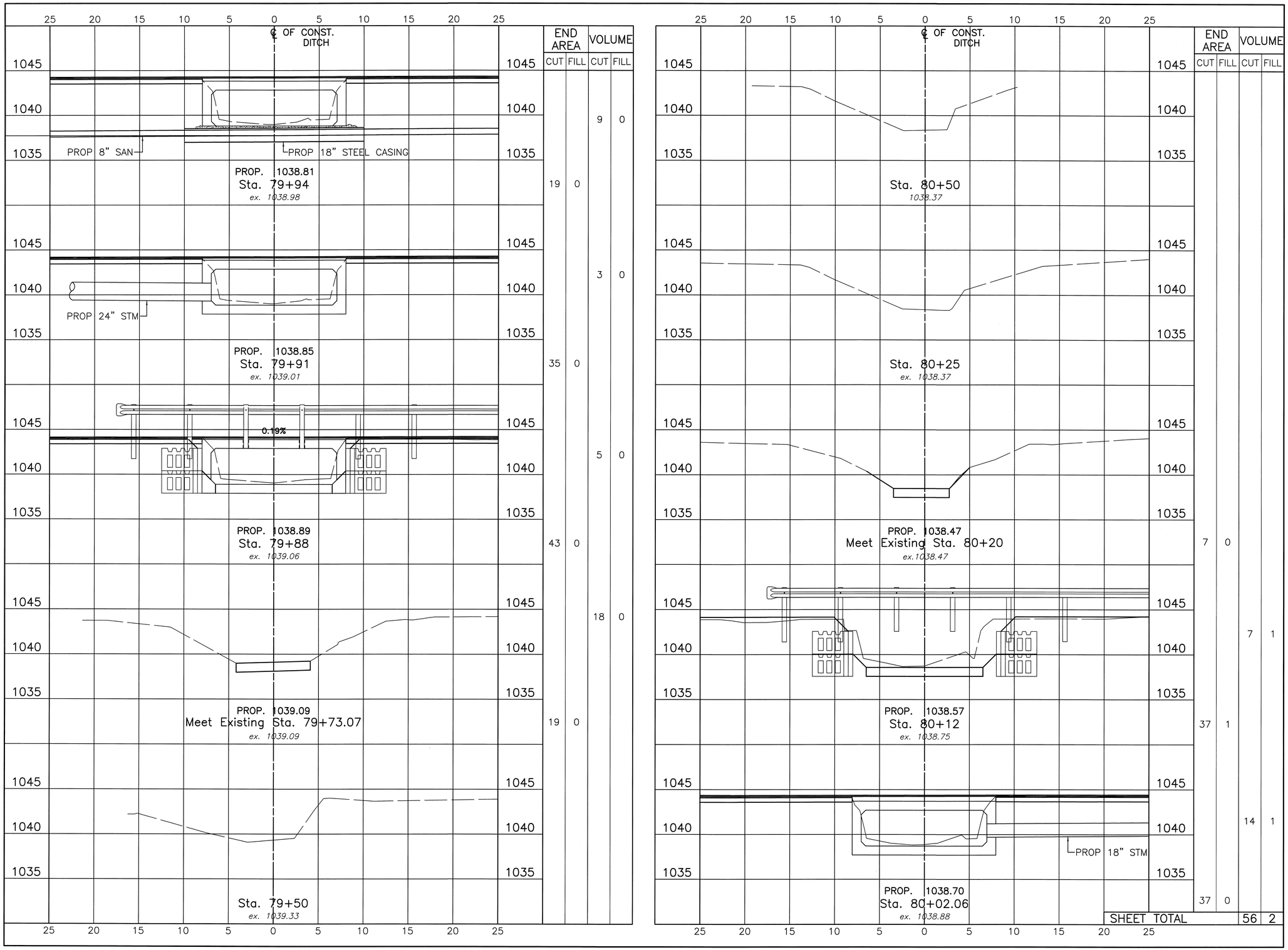

	END AREA CUT	END AREA FILL	VOLUME CUT	VOLUME FILL
	19	0	9	0
	35	0	3	0
	43	0	5	0
	19	0	18	0
	7	0	7	1
	37	1	14	1
	37	0		
SHEET TOTAL			56	2

VERTICAL SCALE IN FEET: 10, 5, 2.5, 0

HORIZONTAL SCALE IN FEET: 5, 2.5, 0, 5

DRAWN BY:	CHECKED BY:
FPW	FPW
DATE: July, 2008	DATE: July, 2008

32nd St. NW Bridge Replacement

Ditch Cross Section (Sta. 76+50 to Sta. 80+50

City of Massillon
Stark County, Ohio

Francis H. Cicchinelli, Jr.
Mayor

Massillon
Means More!

REVISIONS:

DATE	DESCRIPTION

ELECTRONIC FILE NAME: creekxsec.DWG

ACCOUNT NUMBER: 08BR01

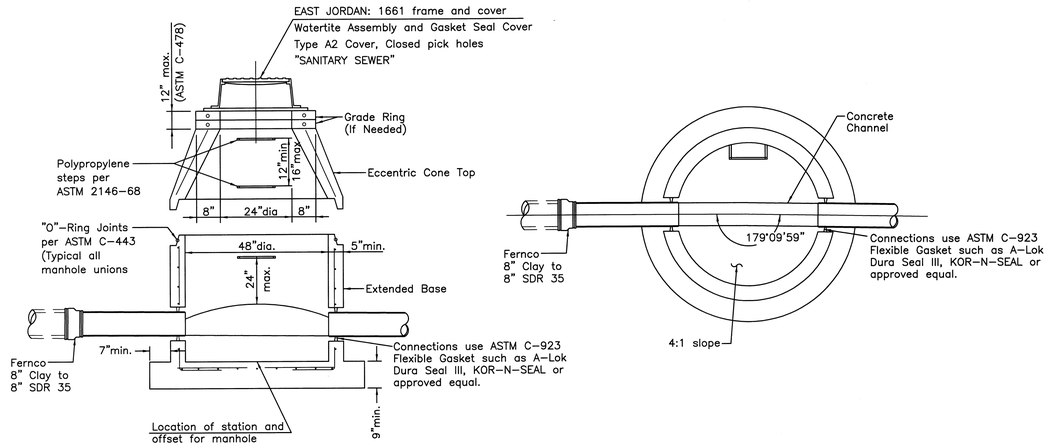

SM-1

PRECAST SANITARY CONCRETE MANHOLE

JOINTS TO BE SEALED WITH CON SEAL FED SPEC SS-S-210A

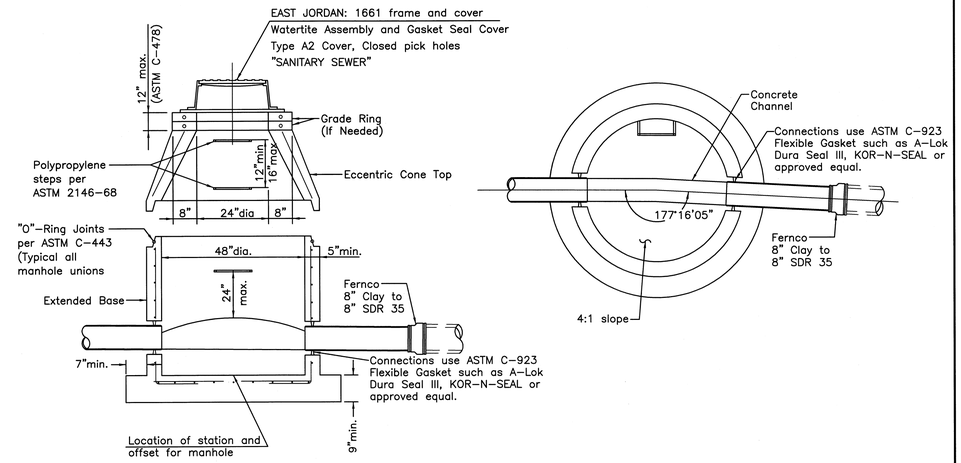

SM-1

PRECAST SANITARY CONCRETE MANHOLE

JOINTS TO BE SEALED WITH CON SEAL FED SPEC SS-S-210A

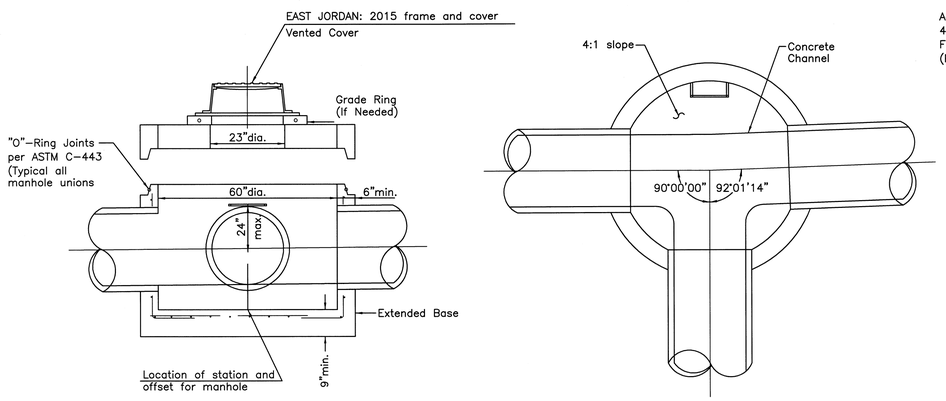

DM-1

PRECAST DRAINAGE CONCRETE MANHOLE

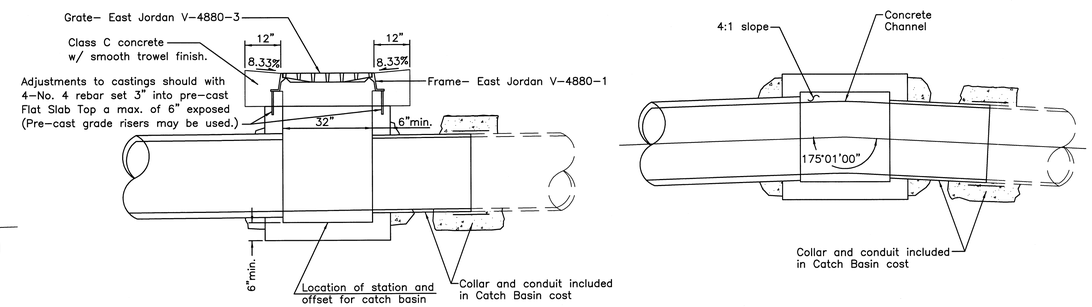

CB-1

PRECAST CATCH BASIN ODOT #5

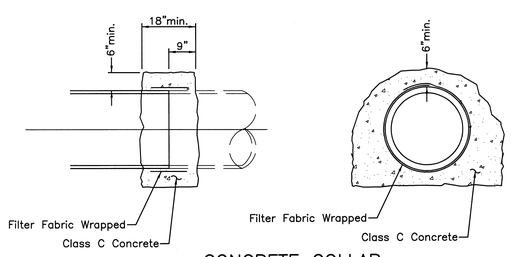

CONCRETE COLLAR

LABOR AND MATERIAL SHALL BE INCLUDED IN ITEM 603 CONDUIT

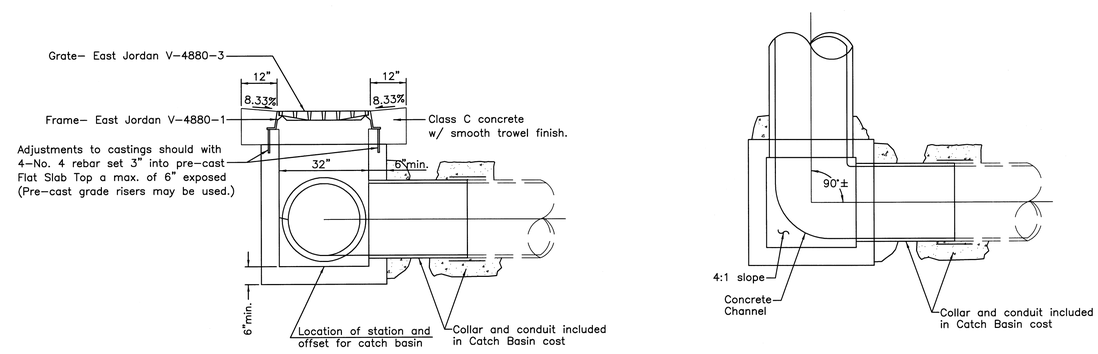

CB-2

PRECAST CATCH BASIN ODOT #5

VERTICAL SCALE IN FEET 0 1 2 4

HORIZONTAL SCALE IN FEET 2 1 0 2

DRAWN BY:	CHECKED BY:
FPW	KAD
DATE: Aug. 2008	DATE: Aug. 2008

32nd St. NW Bridge Replacement

32nd St. NW Manhole and Catch Basin Details and Miscellaneous Details

City of Massillon
Stark County, Ohio

Francis H. Cicchinelli, Jr.
Mayor

Massillon Means More!

REVISIONS:

DATE	DESCRIPTION

ELECTROINIC FILE NAME: 32ndxsec2.DWG

ACCOUNT NUMBER 08BR01

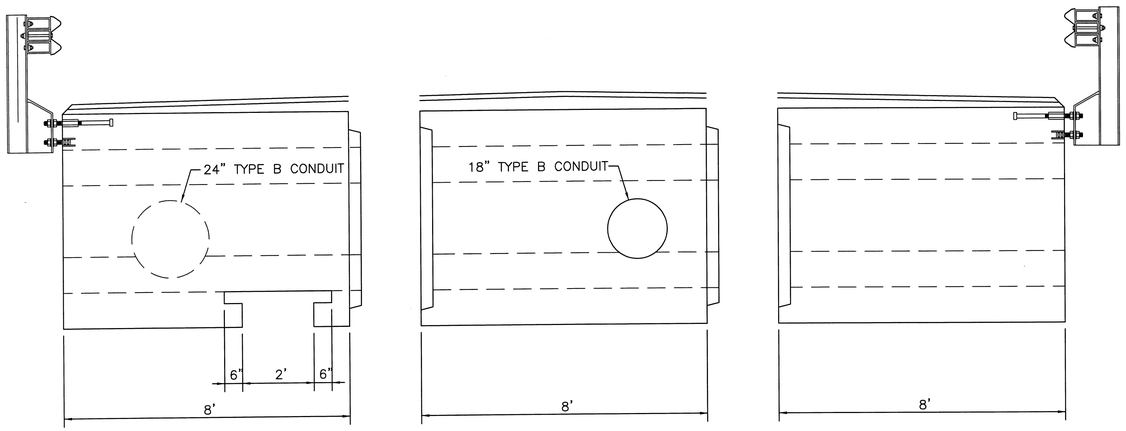

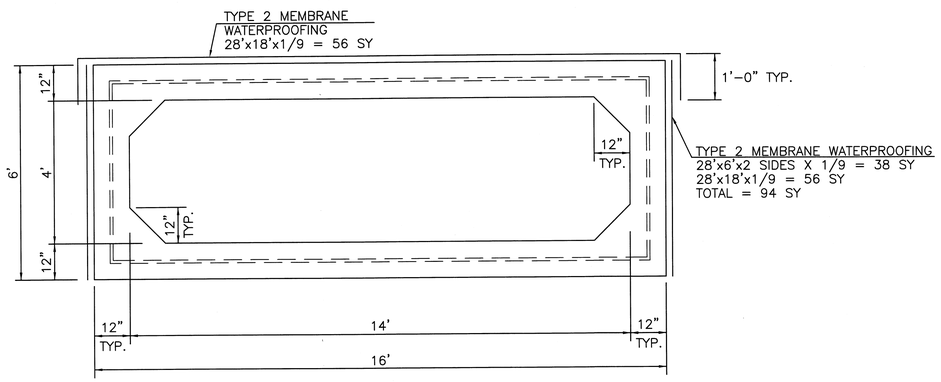

PRE CAST 4 SIDED CONCRETE BOX CULVERT, 706.05

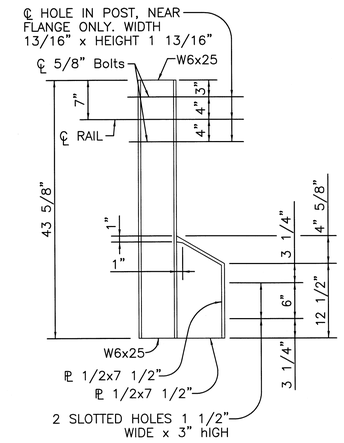

TYPE 2 POST

(DBP-1-92)

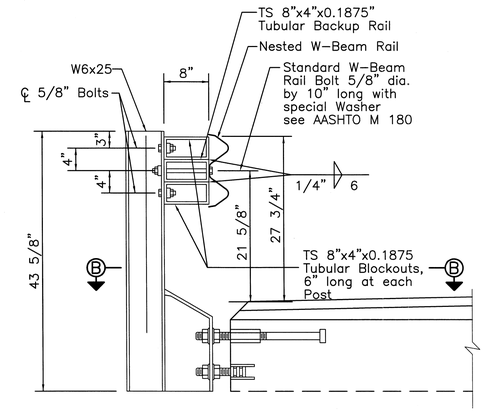

DEEP BEAM BRIDGE GUARDRAIL

(DBR-2-73)

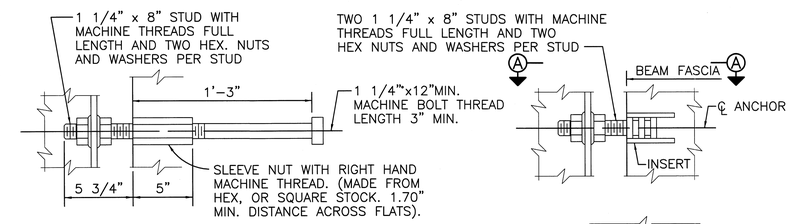

TYPE B ANCHOR DETAIL

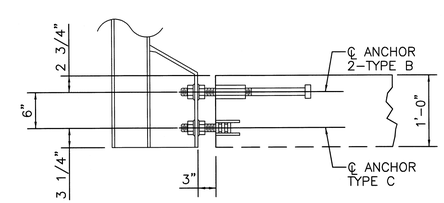

SECTION B-B

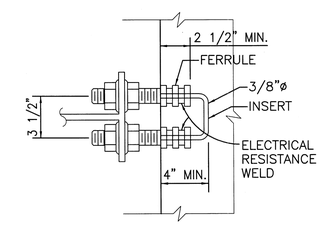

SECTION A-A

TYPE C ANCHOR DETAIL

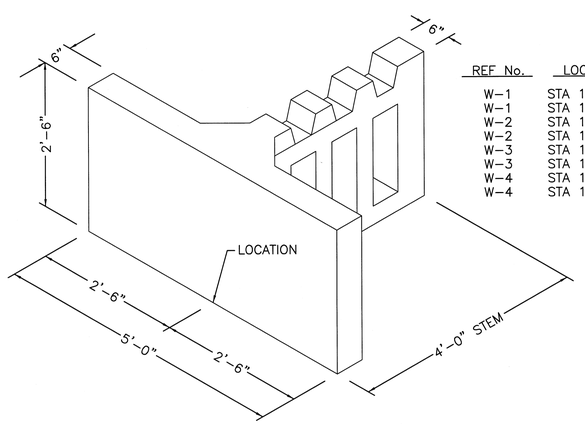

REF No.	LOCATION
W-1	STA 10+42, 12.5' LT, 1037.89
W-1	STA 10+42, 12.5' LT, 1040.39
W-2	STA 10+58, 12.5' LT, 1037.89
W-2	STA 10+58, 12.5' LT, 1040.39
W-3	STA 10+42, 12.5' RT, 1037.57
W-3	STA 10+42, 12.5' RT, 1040.07
W-4	STA 10+58, 12.5' RT, 1037.57
W-4	STA 10+58, 12.5' RT, 1040.07

ITEM 602SPEC PRE CAST T-WALL

ALL APPURTENANCES AND MATERIALS SHALL BE INCLUDED FOR PROPER INSTALLATION. PAID FOR UNDER ITEM 602SPEC PRE CAST T-WALL

PRE CAST 4 SIDED CONCRETE BOX CULVERT, 706.05:

THE WALL, BASE, AND TOP SLAB THICKNESSES SHOWN ON PLANS WERE OBTAINED FROM THE MANUFACTURER AT THE TIME THE PLANS WERE PREPARED. IF THE WALL, BASE, AND/OR SLAB THICKNESSES OF THE PROPOSED CULVERT ARE DIFFERENT FROM WHAT IS SHOWN ON THE PLANS, A MARKED COPY OF THE PROJECT PLANS, INCLUDING ALL PLAN NOTES AND DETAILS SHOWING ALL ITEMS AFFECTED BY DIFFERENT CULVERT DIMENSION SHALL BE SUBMITTED FOR APPROVAL WITH THE SHOP DRAWING. ALL WORK REQUIRED TO ACCOMMODATE ANY REVISED DIMENSIONS SHALL BE AT NO EXTRA COST TO THE CITY.

ITEM 512 TYPE 2 MEMBRANE WATERPROOFING

TYPE 2 WATERPROOFING SHALL BE APPLIED TO THE TOP SURFACE OF THE PRE CAST CULVERT SECTIONS AND SHALL EXTEND 1' DOWN EACH VERTICAL SIDE FOR ALL PORTIONS OF THE CULVERT WHICH SHALL BE IN CONTACT WITH THE BACKFILL. IT SHALL ALSO BE APPLIED VERTICALLY DOWN THE ENTIRE SIDES FOR ALL PORTIONS OF THE CULVERT WHICH SHALL BE IN CONTACT WITH THE BACKFILL AND SHALL BE EXTENDED 1' ONTO THE T-WALLS. APPLICATION AND MATERIALS SHALL BE AS PER ITEM 512 MEMBRANE WATERPROOFING. PAYMENT SHALL BE INCLUDED IN ITEM 603 14x4 PRE CAST 4 SIDED CONCRETE BOX CULVERT.

ITEM 603 14x4 4 SIDED CONCRETE BOX CULVERT, 706.05

JOINT WRAP AS SPECIFIED IN 603.08 AND CONCRETE SEALING AS SPECIFIED IN 603.08 ARE NOT REQUIRED UNDER THE LIMITS OF THE TYPE 2 MEMBRANE WATERPROOFING. THE EXTERIOR JOINT GAP ON THE TOP AND SIDES BETWEEN THE PRE CAST CULVERT SECTIONS SHALL BE FILLED WITH PORTLAND CEMENT MORTAR PRIOR TO INSTALLING THE TYPE 2 MEMBRANE WATERPROOFING.

VERTICAL SCALE IN FEET 0 1 2 4

HORIZONTAL SCALE IN FEET 2 1 0 2

DRAWN BY:	CHECKED BY:
FPW	KAD
DATE: June 2008	DATE: June 2008

32nd St. NW Bridge Replacement

32nd St. NW Cross Section (Sta. 10+90 to Sta. 11+00) and Miscellaneous Details

City of Massillon
Stark County, Ohio

Francis H. Cicchinelli, Jr.
Mayor

Massillon
Means More!

REVISIONS:

DATE	DESCRIPTION

ELECTRONIC FILE NAME: 32ndxsec2.DWG

ACCOUNT NUMBER 08BR01

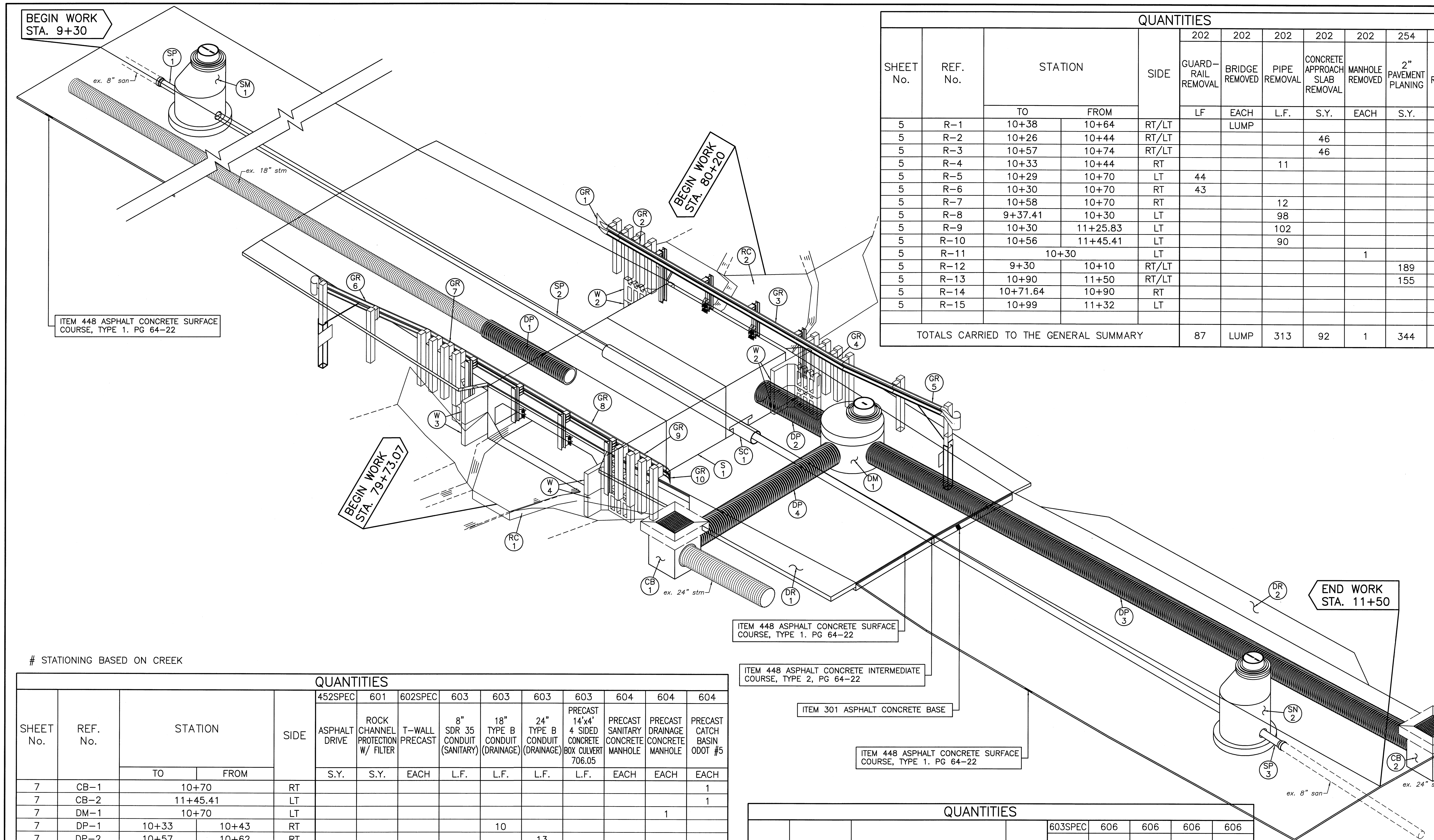

QUANTITIES

SHEET No.	REF. No.	STATION TO	STATION FROM	SIDE	202 GUARD-RAIL REMOVAL (LF)	202 BRIDGE REMOVED (EACH)	202 PIPE REMOVAL (L.F.)	202 CONCRETE APPROACH SLAB REMOVAL (S.Y.)	202 MANHOLE REMOVED (EACH)	254 2" PAVEMENT PLANING (S.Y.)	202 DRIVE REMOVED (S.Y.)
5	R–1	10+38	10+64	RT/LT		LUMP					
5	R–2	10+26	10+44	RT/LT				46			
5	R–3	10+57	10+74	RT/LT				46			
5	R–4	10+33	10+44	RT			11				
5	R–5	10+29	10+70	LT	44						
5	R–6	10+30	10+70	RT	43						
5	R–7	10+58	10+70	RT			12				
5	R–8	9+37.41	10+30	LT			98				
5	R–9	10+30	11+25.83	LT			102				
5	R–10	10+56	11+45.41	LT			90				
5	R–11	10+30		LT					1		
5	R–12	9+30	10+10	RT/LT						189	
5	R–13	10+90	11+50	RT/LT						155	
5	R–14	10+71.64	10+90	RT							8
5	R–15	10+99	11+32	LT							13
TOTALS CARRIED TO THE GENERAL SUMMARY					87	LUMP	313	92	1	344	21

STATIONING BASED ON CREEK

QUANTITIES

SHEET No.	REF. No.	STATION TO	STATION FROM	SIDE	452SPEC ASPHALT DRIVE (S.Y.)	601 ROCK CHANNEL PROTECTION W/ FILTER (S.Y.)	602SPEC T–WALL PRECAST (EACH)	603 8" SDR 35 CONDUIT (SANITARY) (L.F.)	603 18" TYPE B CONDUIT (DRAINAGE) (L.F.)	603 24" TYPE B CONDUIT (DRAINAGE) (L.F.)	603 PRECAST 14'x4' 4 SIDED CONCRETE BOX CULVERT 706.05 (L.F.)	604 PRECAST SANITARY CONCRETE MANHOLE (EACH)	604 PRECAST DRAINAGE CONCRETE MANHOLE (EACH)	604 PRECAST CATCH BASIN ODOT #5 (EACH)
7	CB–1	10+70		RT										1
7	CB–2	11+45.41		LT										1
7	DM–1	10+70		LT									1	
7	DP–1	10+33	10+43	RT					10					
7	DP–2	10+57	10+62	RT						13				
7	DP–3	10+33	10+43	RT						76				
7	DP–4	10+57	10+62	RT						24				
7	DR–1	10+71.64	10+90	RT	7									
7	DR–2	10+99	11+32	LT.	14									
11	RC–1	# 80+12	# 80+20	RT		14								
11	RC–2	# 79+73.07	# 79+88	LT		27								
7	S–1	10+50		RT/LT							24			
6	SM–1	9+37.41		LT								1		
7	SM–2	11+25.83		LT								1		
6	SP–1	9+32.41	9+37.41	LT				5						
7	SP–2	9+37.41	11+25.83	LT				187						
7	SP–3	11+25.83	11+30.83	LT				5						
14	W–1	10+42		LT			2							
14	W–2	10+58		LT			2							
14	W–3	10+42		RT			2							
14	W–4	10+58		RT			2							
TOTALS CARRIED TO THE GENERAL SUMMARY					21	41	8	197	10	113	24	2	1	2

QUANTITIES

SHEET No.	REF. No.	STATION TO	STATION FROM	SIDE	603SPEC 18" STEEL CASING (LF)	606 ANCHOR ASSEMBLY, TYPE T (EACH)	606 FLARED END (EACH)	606 GUARDRAIL NESTED TYPE 5 W/ TUBULAR BACKUP (LF)	606 BRIDGE TERMINAL ASSEMBLY TYPE 4 (EACH)
7	GR–1	10+34.375		LT			1		
7	GR–2	10+34.375	10+40.625	LT					1
7	GR–3	10+40.625	10+59.375	LT				18.75	
7	GR–4	10+59.375	10+65.625	LT					1
7	GR–5	10+65.625	10+78.013	LT		1			
7	GR–6	10+21.99	10+34.375	RT		1			
7	GR–7	10+34.375	10+40.625	RT					1
7	GR–8	10+40.625	10+59.375	RT				18.75	
7	GR–9	10+59.375	10+65.625	RT					1
7	GR–10	10+65.625		RT			1		
7	SC–1	10+40.00	10+60.00		20				
TOTALS CARRIED TO THE GENERAL SUMMARY					20	2	2	37.5	4

VERTICAL SCALE IN FEET

HORIZONTAL SCALE IN FEET

DRAWN BY: FPW
CHECKED BY: KAD
DATE: June 2008
DATE: June 2008

32nd St. NW Bridge Replacement

32nd St. NW Sub-Summary and ID Plan

City of Massillon
Stark County, Ohio

Francis H. Cicchinelli, Jr.
Mayor

Massillon Means More!

REVISIONS:

DATE	DESCRIPTION

ELECTRONIC FILE NAME: 32ndxsec2.DWG

ACCOUNT NUMBER 08BR01

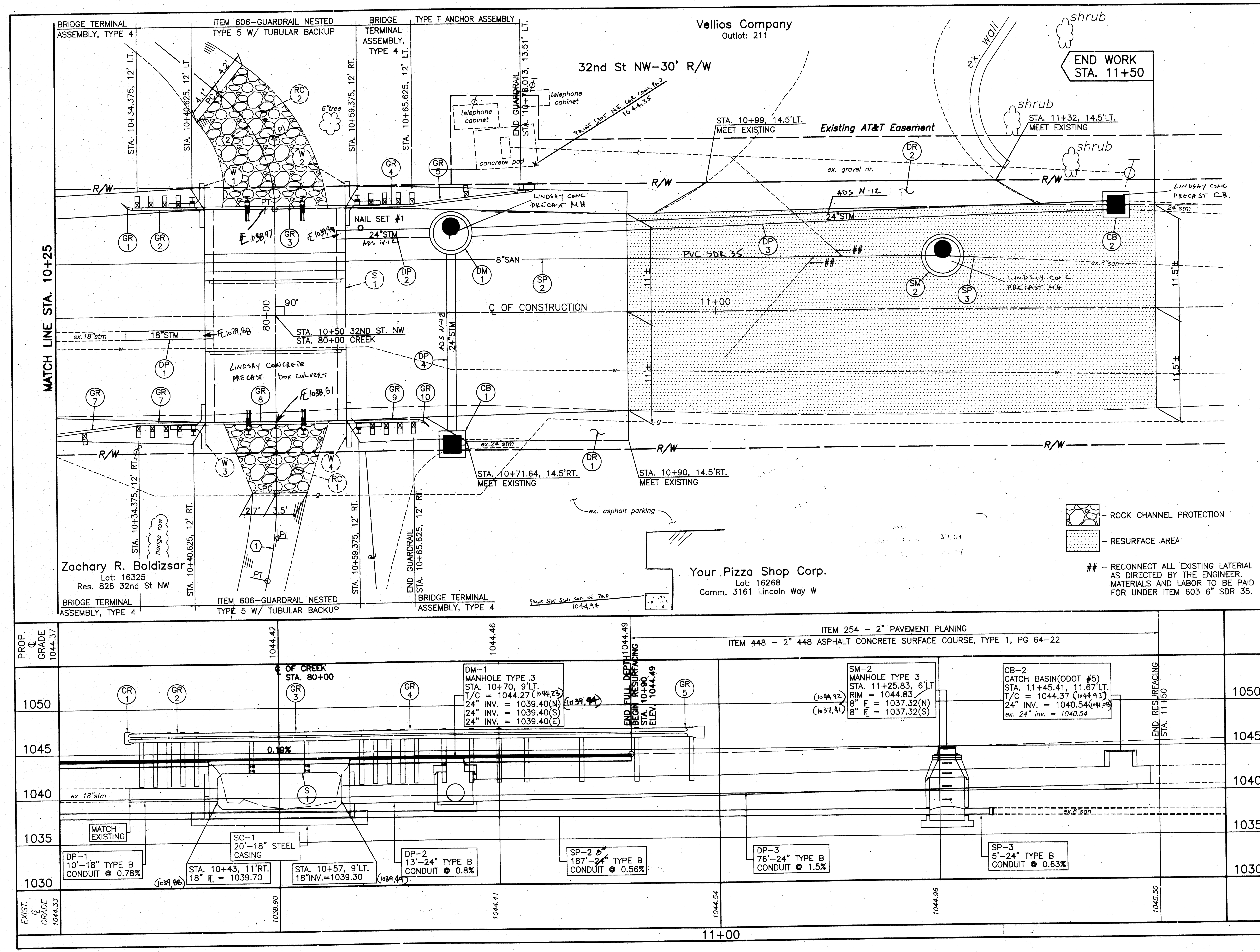

32nd St NW Bridge Replacement

Plan and Profile Sta. 10+25 to Sta. 11+50

City of Massillon
Stark County, Ohio

VERTICAL SCALE IN FEET

HORIZONTAL SCALE IN FEET

DRAWN BY:	CHECKED BY:
FPW	KAD
DATE: July, 2008	DATE: July, 2008

Francis H. Cicchinelli, Jr.
Mayor

Massillon Means More!

REVISIONS:

DATE	DESCRIPTION
1/05/2010	AS-BUILTS

ELECTRONIC FILE NAME: prop32ndpp.DWG

ACCOUNT NUMBER 08BR01

CONTROL			
DESCRIPTION	NORTH	EAST	ELEVATION
NAIL SET #1	412644.2510	2225676.9827	1044.23
NAIL SET #2	412592.7699	2225679.5480	1044.17
STA 10+00	412584.5363	2225686.8368	
STA. 11+00	412684.5362	2225686.6522	

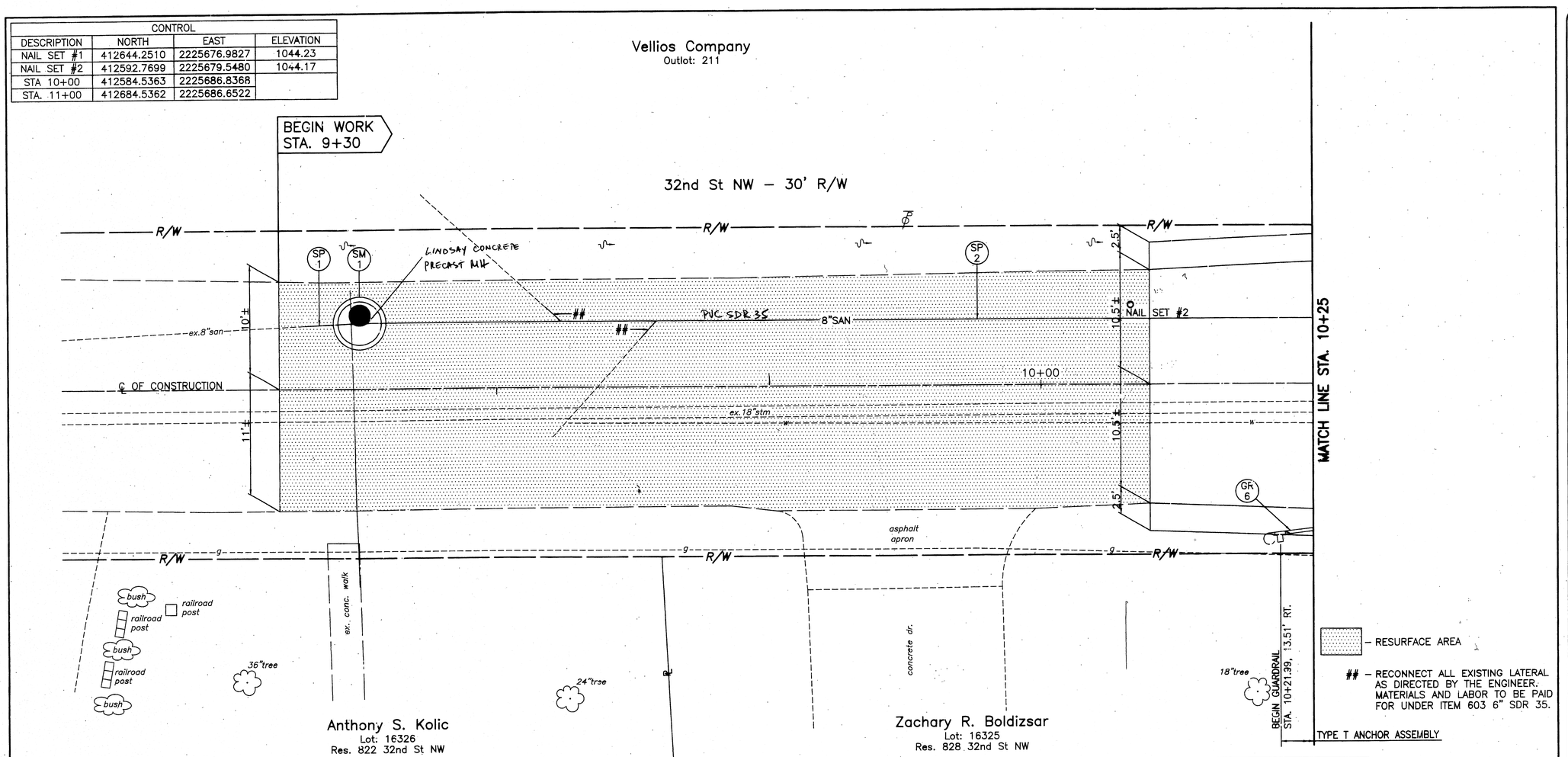

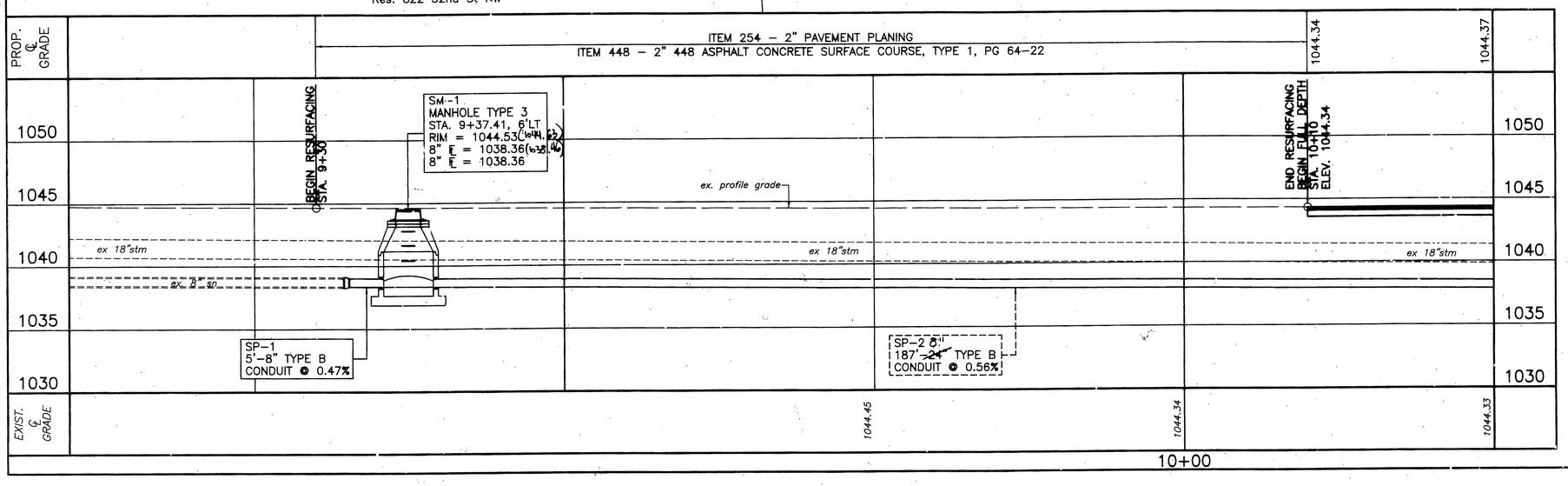

SCALE IN FEET
VERTICAL
10
5
2.5
0

HORIZONTAL SCALE IN FEET
5 2.5 0 5

DRAWN BY:	CHECKED BY:
FPW	KAD
DATE: July, 2008	DATE: July, 2008

32nd St NW Bridge Replacement

Plan and Profile Sta. 9+10 to Sta. 10+25

City of Massillon
Stark County, Ohio

Francis H. Cicchinelli, Jr.
Mayor

Massillon
Means More!

REVISIONS:

DATE	DESCRIPTION
1/05/2000	AS-BUILTS

ELECTRONIC FILE NAME:
prop32ndpp1.DWG

ACCOUNT NUMBER
08BR01