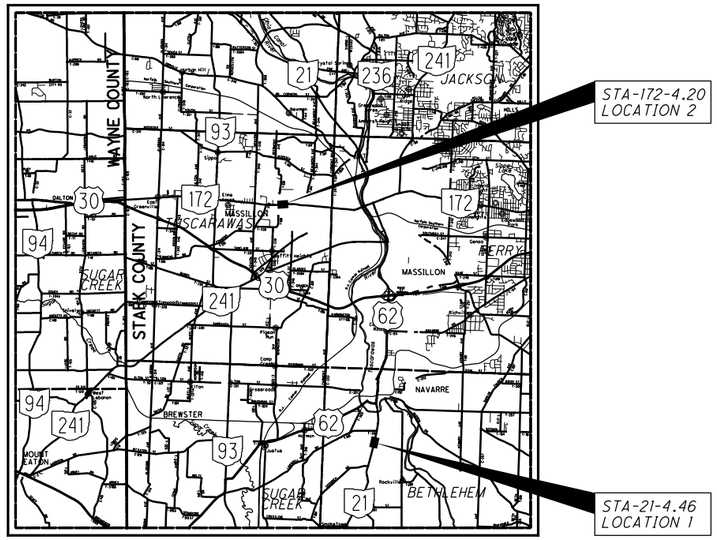

LOCATION MAP

SCALE IN MILES

0 2 4 6 8

N

PORTION TO BE IMPROVED
INTERSTATE HIGHWAY
FEDERAL ROUTES
STATE ROUTES
COUNTY & TOWNSHIP ROADS
OTHER ROADS

DESIGN DESIGNATION

	STA-21-4.46	STA-172-4.20
CURRENT ADT (2018)	5,400	11,000
DESIGN YEAR ADT (2038)	5,900	12,000
DESIGN HOURLY VOLUME (2038)	530	1,100
DIRECTIONAL DISTRIBUTION	0.55	0.51
TRUCKS (24 HOUR B&C)	8%	9%
DESIGN SPEED	60 MPH	40 MPH
LEGAL SPEED	55 MPH	35 MPH

DESIGN FUNCTIONAL CLASSIFICATION:
03 - PRINCIPAL ARTERIAL (RURAL) - S.R. 21
03 - PRINCIPAL ARTERIAL (URBAN) - S.R. 172

NHS PROJECT	YES	NO

DESIGN EXCEPTIONS

DESIGN FEATURE	APPROVAL DATES	SHEET NUMBERS
STA-21-4.46		
SHOULDER WIDTH	3/13/2017	2

UNDERGROUND UTILITIES

CONTACT BOTH SERVICES TWO WORKING DAYS **BEFORE YOU DIG.**

OHIO Utilities Protection SERVICE

Call Before You Dig
1-800-362-2764

(Non-members must be called directly)

OIL & GAS PRODUCERS
UNDERGROUND PROTECTION SERVICE
1-800-925-0988

PLAN PREPARED BY:

CARPENTER MARTY transportation

6612 SINGLETREE DRIVE COLUMBUS, OH 43229
614.866.2424 * WWW.CMTRAN.COM

STATE OF OHIO
DEPARTMENT OF TRANSPORTATION

STA-21-4.46
STA-172-4.20

CITY OF MASSILLON
TUSCARAWAS TOWNSHIP
BETHLEHEM TOWNSHIP
STARK COUNTY

INDEX OF SHEETS:

TITLE SHEET	1
TYPICAL SECTIONS	2-3
SAFETY EDGE DETAIL	4
GENERAL NOTES	5-7
MAINTENANCE OF TRAFFIC	8-12
GENERAL SUMMARY	13-14
STA-21-4.46	
SUBSUMMARY	15
PLAN AND PROFILE	16
CROSS SECTIONS	17-19
STA-172-4.20	
SUBSUMMARY	20
PLAN AND PROFILE	21
CROSS SECTIONS	22-25
SANITARY SEWER	26-27
WATER WORK	28-31
STRUCTURE (20' SPAN AND UNDER):	
STA-21-0446	32-37
STRUCTURE (OVER 20' SPAN):	
STA-172-0420	38-45
RIGHT OF WAY	46-51

ENGINEERS SEAL:

SIGNED:
DATE:

ENGINEERS SEAL:

SIGNED:
DATE:

LOCATION	LATITUDE	LONGITUDE
1	40°42'17" N	81°31'27" W
2	40°47'46" N	81°34'08" W

STAGE 3
SUBMISSION
8/11/2017

STANDARD CONSTRUCTION DRAWINGS							SUPPLEMENTAL SPECIFICATIONS		SPECIAL PROVISIONS
BP-3.1	7/18/14	MGS-1.1	7/21/17	TC-41.20	10/18/13		800	1/19/18	
BP-4.1	7/19/13	MGS-2.1	7/19/13	TC-42.20	10/18/13		832	1/17/14	
BP-5.1	7/19/13	MGS-2.3	7/18/14	TC-52.10	10/18/13		902	12/31/12	
		MGS-4.2	7/19/13	TC-52.20	7/21/17		940	4/17/15	
CB-2.1	1/15/16			TC-61.30	1/20/17				
		MT-97.10	7/18/14	TC-65.10	1/17/14				
MH-1.1	1/15/16	MT-101.60	1/20/17	TC-65.11	7/21/17				
MH-1.2	1/15/16	MT-105.10	7/19/13						
		MT-110.10	7/19/13	BR-2-15	7/17/15				
DM-1.1	7/21/17								
DM-4.3	1/15/16								
DM-4.4	1/15/16								

PROJECT DESCRIPTION

THE PROJECT CONSISTS OF THE REPLACEMENT OF 2 STRUCTURES W/ MINIMAL ROADWAY WORK IN STARK COUNTY: STA-21-4.46 AND STA-172-4.20.

EARTH DISTURBED AREAS - STA-21-4.46

PROJECT EARTH DISTURBED AREA:	0.26 ACRES
ESTIMATED CONTRACTOR EARTH DISTURBED AREA:	0.25 ACRES
NOTICE OF INTENT EARTH DISTURBED AREA:	N/A (NOI NOT REQUIRED)

EARTH DISTURBED AREAS - STA-172-4.20

PROJECT EARTH DISTURBED AREA:	0.30 ACRES
NOTICE OF INTENT EARTH DISTURBED AREA:	N/A (NOI NOT REQUIRED)

2016 SPECIFICATIONS

THE STANDARD SPECIFICATIONS OF THE STATE OF OHIO, DEPARTMENT OF TRANSPORTATION, INCLUDING SUPPLEMENTAL SPECIFICATIONS LISTED IN THE PLANS AND CHANGES LISTED IN THE PROPOSAL SHALL GOVERN THIS IMPROVEMENT.

I HEREBY APPROVE THESE PLANS AND DECLARE THAT THE MAKING OF THIS IMPROVEMENT WILL REQUIRE THE CLOSING TO TRAFFIC OF THE HIGHWAY AND THAT DETOURS WILL BE PROVIDED AS INDICATED ON SHEETS 8-12.

APPROVED
DATE DISTRICT DEPUTY DIRECTOR

APPROVED
DATE DIRECTOR, DEPARTMENT OF TRANSPORTATION

FEDERAL PROJECT NO. E150 (673)

PID NO. 95369

CONSTRUCTION PROJECT NO.

RAILROAD INVOLVEMENT NONE

STA-21-4.46
STA-172-4.20

P:\ODT\04\0009_04-7_STA-21_172-4.46_4.20\95369_STA-21_172-4.46\Design\Roadway\Sheets\95369_GT001.dgn Sheet 8/11/2017 9:35:42 AM CMT008

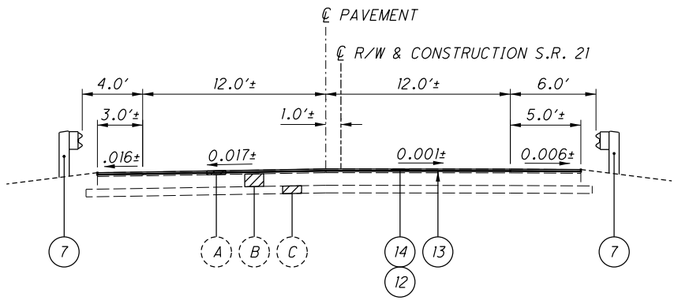

EXISTING NORMAL SECTION

SECTION APPLIES:
STA. 260+15.00 TO STA. 260+65.00
(SEE NOTE 1)

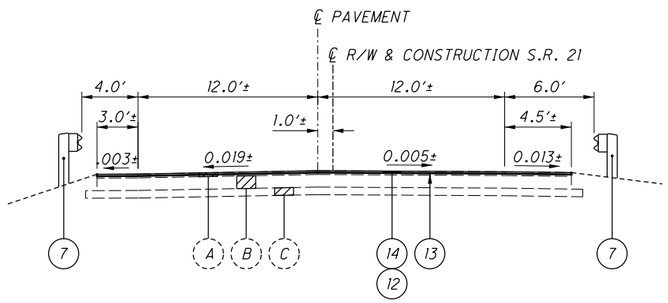

EXISTING NORMAL SECTION

SECTION APPLIES:
STA. 261+25.00 TO STA. 261+75.00
(SEE NOTE 2)

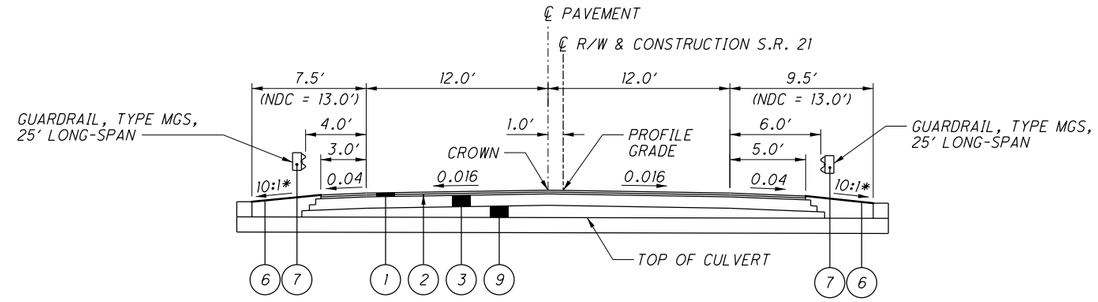

NORMAL SECTION OVER CULVERT

SECTION APPLIES:
STA. 260+89.00 TO STA. 261+07.00

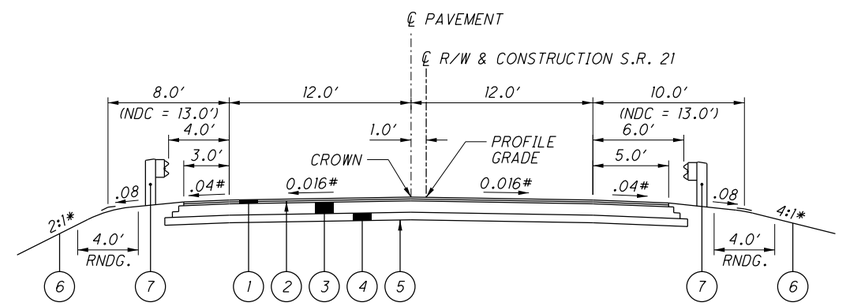

NORMAL SECTION

SECTION APPLIES:
STA 260+65.00 TO STA. 260+89.00
STA. 261+07.00 TO STA. 261+25.00

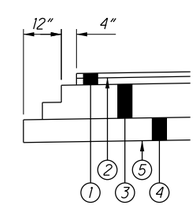

BASE AND SUBBASE STEP DETAIL

LEGEND FOR PROPOSED PAVEMENT

1. ITEM 441 3″ ASPHALT CONCRETE SURFACE COURSE, TYPE 1, (448), AS PER PLAN, PG64-22 (2″ MAX LIFT)
2. ITEM 407 TACK COAT (0.055 GAL./SY)
3. ITEM 301 9″ ASPHALT CONCRETE BASE, PG64-22
4. ITEM 304 6″ AGGREGATE BASE, AS PER PLAN
5. ITEM 204 SUBGRADE COMPACTION
6. ITEM 659 SEEDING AND MULCHING
7. ITEM 606 GUARDRAIL, TYPE MGS
8. ITEM 301 VARIABLE ASPHALT CONCRETE BASE, PG64-22
9. ITEM 304 VARIABLE AGGREGATE BASE, AS PER PLAN
10. ITEM 608 4″ CONCRETE WALK
11. ITEM 609 CURB, TYPE 6
12. ITEM 254 PAVEMENT PLANING, ASPHALT CONCRETE (T=1½″)
13. ITEM 407 TACK COAT (0.085 GAL./SY)
14. ITEM 441 1½″ ASPHALT CONCRETE SURFACE COURSE, TYPE 1, (448), AS PER PLAN, PG64-22

LEGEND FOR EXISTING PAVEMENT

- (A) EXISTING ASPHALT CONCRETE PAVEMENT
- (B) EXISTING RIGID BASE (BRICK AND/OR CONCRETE)
- (C) EXISTING AGGREGATE BASE
- (D) EXISTING CONCRETE WALK
- (E) EXISTING CURB

NOTES

1. PAVEMENT CROSS SLOPES TAKEN AT STA. 260+50.00.
2. PAVEMENT CROSS SLOPES TAKEN AT STA. 261+25.00.

* OR AS SHOWN IN CROSS SECTIONS
\# TRANSITION TO EXISTING CROSS SLOPE IN 15′.

TYPICAL SECTIONS - STA.-21-4.46

STA-21-4.46
STA-172-4.20

P:\ODT\04\0009.04-7_STA-21.172-4.46.4.20\95369_STA-21.172-4.46\Design\Roadway\Sheets\95369_GY021.dgn Sheet 8/11/2017 9:35:43 AM CMT008

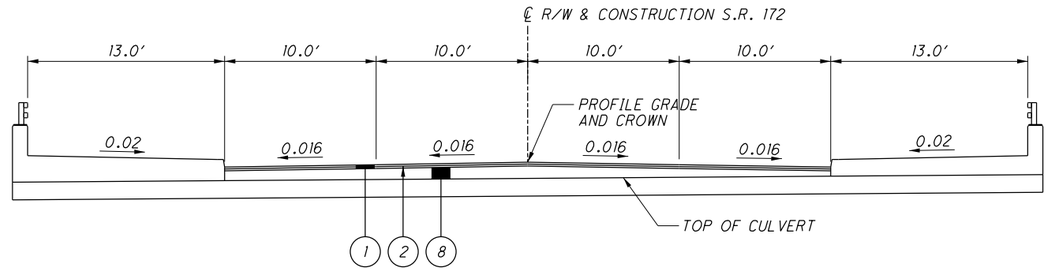

NORMAL SECTION OVER CULVERT

SECTION APPLIES:
STA. 220+78.95 TO STA. 220+99.26

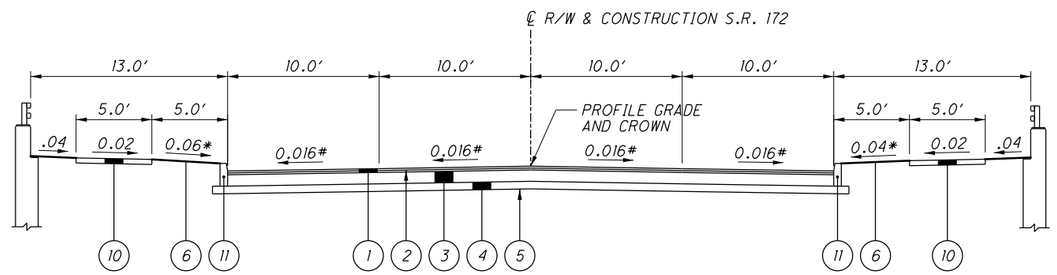

NORMAL SECTION

SECTION APPLIES:
STA. 220+50.00 TO STA. 220+78.95
STA. 220+99.26 TO STA. 221+40.00 (SEE NOTE 2)

NOTES

1. FOR LEGEND, SEE SHEET 2.
2. THE LIMITS OF THE NEW CURB ON THE RIGHT SIDE OF THE PROJECT END AT STA. 221+42.50.
3. PAVEMENT CROSS SLOPES TAKEN AT STA. 220+50.00.
4. PAVEMENT CROSS SLOPES TAKEN AT STA. 221+40.00.

* OR AS SHOWN IN CROSS SECTIONS
\# TRANSITION TO EXISTING CROSS SLOPE IN 15′.

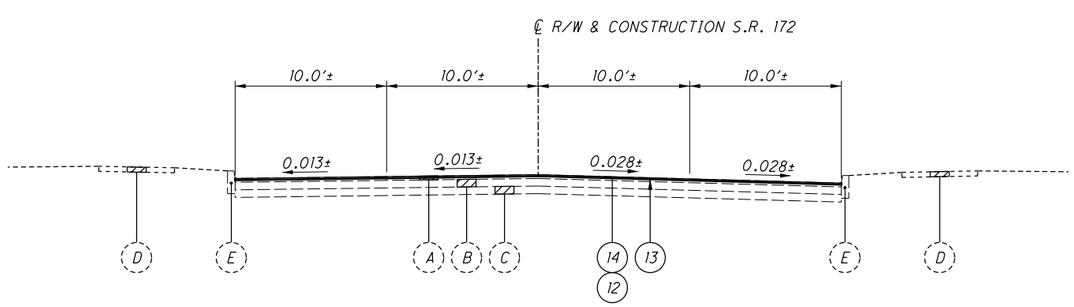

EXISTING NORMAL SECTION

SECTION APPLIES:
STA. 220+00.00 TO STA. 220+50.00
(SEE NOTE 3)

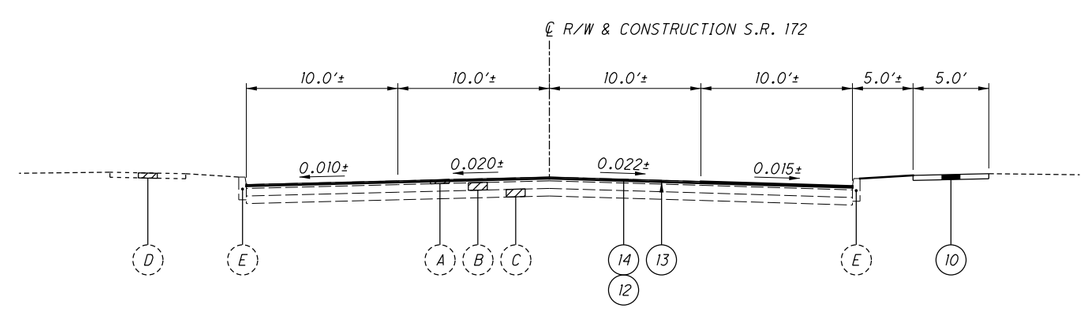

EXISTING NORMAL SECTION

SECTION APPLIES:
STA. 221+40.00 TO STA. 221+90.00
(SEE NOTE 4)

TYPICAL SECTIONS - STA-172-4.20

STA-21-4.46
STA-172-4.20

P:\ODT\04\0009_04-7_STA-21_172-4.46_4.20\95369_STA-21_172-4.46\Design\Roadway\Sheets\95369_GY172.dgn Sheet 8/11/2017 9:35:44 AM CMT008

SAFETY EDGE (ASPHALT CONCRETE)

IN ADDITION TO THE REQUIREMENTS OF 401.12, ATTACH A DEVICE TO THE SCREED OF THE PAVER THAT CONFINES THE MATERIAL AT THE END GATE AND EXTRUDES THE ASPHALT MATERIAL IN SUCH A WAY THAT RESULTS IN A COMPACTED WEDGE SHAPE PAVEMENT EDGE OF APPROXIMATELY 30 DEGREES (NOT STEEPER THAN 40 DEGREES). ENSURE THE DEVICE MAINTAINS CONTACT WITH THE EXISTING SURFACE, AND ALLOW FOR AUTOMATIC TRANSITION TO CROSS ROADS, DRIVEWAYS AND OBSTRUCTIONS. DO NOT USE CONVENTIONAL SINGLE PLATE STRIKE OFF.

USE THE TRANSTECH SHOULDER WEDGE MAKER, THE CARLSON SAFETY EDGE END GATE, THE ADVANT-EDGER, THE TROXLER SAFETY SLOPE OR A SIMILAR APPROVED-EQUAL DEVICE THAT PRODUCES THE SAME WEDGE CONSOLIDATION RESULTS. CONTACT INFORMATION FOR THESE WEDGE SHAPE COMPACTION DEVICES IS THE FOLLOWING:

TRANSTECH SYSTEMS, INC.
1594 STATE STREET
SCHENECTADY, NY 12304
1-800-724-6306
WWW.TRANSTECHSYS.COM

ADVANT-EDGE PAVING EQUIPMENT LLC
P.O. BOX 9163
NISKAYUNA, NY 12309-0163
518-280-6090
WWW.ADVANTAEDGEPAVING.COM

CARLSON SAFETY EDGE END GATE
18425 50TH AVENUE EAST
TACOMA, WA 98446
253-875-8000

TROXLER ELECTRONIC LABORATORIES, INC.
3008 E. CORNWALLIS RD.
RESEARCH TRIANGLE PARK, NC 27709
1-877-TROXLER
WWW.TROXLERLABS.COM

IF ELECTING TO USE A SIMILAR DEVICE, PROVIDE PROOF THAT THE DEVICE HAS BEEN USED ON PREVIOUS PROJECTS WITH ACCEPTABLE RESULTS OR CONSTRUCT A TEST SECTION PRIOR TO THE BEGINNING OF WORK AND DEMONSTRATE WEDGE COMPACTION TO THE SATISFACTION OF THE ENGINEER. SHORT SECTIONS OF HANDWORK WILL BE ALLOWED WHEN NECESSARY FOR TRANSITIONS AND TURNOUTS OR OTHERWISE AUTHORIZED BY THE ENGINEER.

IN ADDITION TO THE REQUIREMENTS OF 401.16, MAKE THE FIRST ROLLER PASS 8 TO 12 INCHES AWAY FROM TAPERED EDGE. DO NOT ROLL THE TAPER

NOTES:

1.) SAFETY EDGES ARE REQUIRED AT THE OUTSIDE EDGES OF THE PAVED ROADWAY (EDGE OF TRAVEL LANE OR EDGE OF PAVED SHOULDER).

2.) FOR NEW ASPHALT CONCRETE PAVEMENT, CONSTRUCT THE SAFETY EDGE THE FULL THICKNESS OF THE SURFACE AND INTERMEDIATE COURSES, NOT TO EXCEED 3.00".

3.) FOR NEW CONCRETE PAVEMENT, CONSTRUCT THE SAFETY EDGE 4" THICK. CONSTRUCT A NEAR-VERTICAL FACE BELOW THE SAFETY EDGE.

* 40° MAX

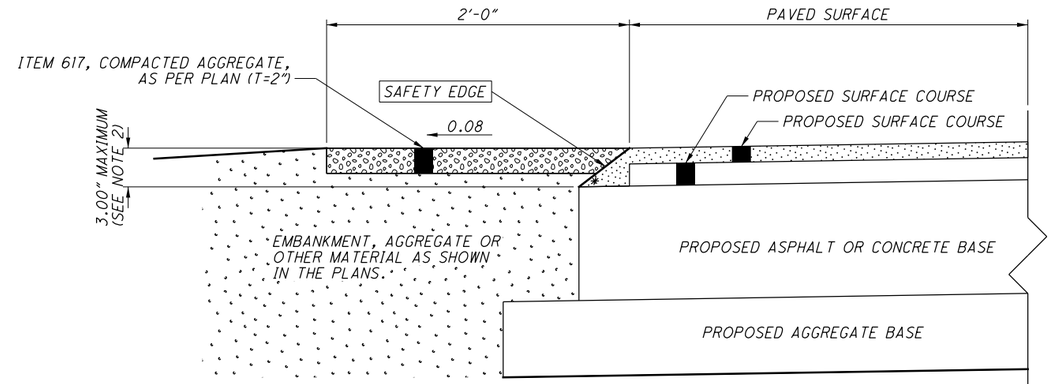

SAFETY EDGE DETAIL FOR NEW ASPHALT CONCRETE PAVEMENT CONSTRUCTION

ESTIMATED QUANTITIES (FOR ASPHALT CONCRETE PAVEMENT)

ROUTE	SAFETY EDGE THICKNESS (IN.)	STATION TO STATION			SIDE	441 ASPHALT CONCRETE SURFACE COURSE, TYPE I (448), PG64-22, AS PER PLAN (CY)	408 PRIME COAT, AS PER PLAN (GAL)	617 COMPACTED AGGREGATE, AS PER PLAN (CY)
S.R. 21	3	260+65.00	TO	261+25.00	LT./RT.	0.11	10.67	1.48
TOTALS CARRIED TO GENERAL SUMMARY						1	11	2

REVISED: 6/25/12

P:\ODT\04\0009_04-7_STA-21.172-4.46_4.20\95369_STA-21.172-4.46\Design\Roadway\Sheets\95369_GY001.dgn Sheet 8/11/2017 9:35:44 AM CMT008

DISTRICT 4 - PLANNING & ENGINEERING

DESIGNED MAC | REVIEWED TJP

REVISION DATE 06/25/12 | CHECKED TJP

SAFETY EDGE DETAIL (NEW CONSTRUCTION)

STA-21-4.46
STA-172-4.20

1/1

4/51

ROUNDING

THE ROUNDING AT SLOPE BREAKPOINTS SHOWN ON THE TYPICAL SECTIONS APPLIES TO ALL CROSS-SECTIONS EVEN THOUGH OTHERWISE SHOWN.

UTILITIES

THE CONTRACTOR SHALL USE THE FOLLOWING PROCEDURE AT EACH LOCATION WHERE WORK IS PERFORMED, IN ACCORDANCE WITH SECTIONS 105.07 AND 107.16 IN THE CONSTRUCTION AND MATERIALS SPECIFICATIONS:

THE CONTRACTOR SHALL NOTIFY THE PROJECT ENGINEER, THE OHIO UTILITIES PROTECTION SERVICE (OUPS), THE OHIO & GAS PROCEDURES UNDERGROUND PROTECTION SERVICE (OGPUPS), AND ALL NON REGISTERED UTILITY OWNERS AT LEAST TWO (2) WORKING DAYS PRIOR TO COMMENCING CONSTRUCTION OPERATIONS IN ALL AREAS.

OUPS 1-800-362-2764 (CONTACT LIMITED BASIS PARTICIPANTS DIRECTLY)
OGPUPS 1-800-925-0988

LISTED BELOW ARE ALL UTILITIES LOCATED WITHIN THE PROJECT CONSTRUCTION LIMITS TOGETHER WITH THEIR RESPECTIVE OWNERS:

ELECTRIC:
OHIO EDISON
2600 S. ERIE ST.
MASSILLON, OH 44646
ATTN: KEVIN MCCLUSKY
PHONE: 330-830-7083

WATER:
AQUA OHIO
870 3RD STREET, NW.
MASSILLON, OH 44647
ATTN: JACOB FLANARY
PHONE: 330-832-5764 EXT: 50650

SANITARY:
CITY OF MASSILLON
100 BIG INDIAN DRIVE SW
MASSILLON, OH 44646
ATTN: TONY ULRICH
330-833-3304

GAS:
COLUMBIA GAS OF OHIO
(TRANSMISSION)
8462 STATE ROUTE 179
LAKEVILLE, OH 44638
ATTN: JACK A. ROHRBAUGH
PHONE: 419-827-2620

GAS:
DOMINION EAST OHIO
320 SPRINGSIDE DRIVE,
SUITE 320
AKRON, OH 44333
ATTN: BRYAN D. DAYTON
PHONE: 330-664-2409

TELECOM:
FRONTIER COMMUNICATIONS
6223 NORWALK ROAD
MEDINA, OH 44256
ATTN: BRENT FIALA
PHONE: 330-722-9453

TELECOM:
MASSILLON CABLE
814 CABLE COURT NW
MASSILLON, OH 44648
ATTN: JEFF CAMPBELL
PHONE: 330-833-0202

TELECOM:
AT&T
50 W. BOWERY STREET
4TH FLOOR
AKRON, OH 44308
ATTN: CINDY ZUCHEGNO
PHONE: 330-384-3561

TELECOM:
CHARTER COMMUNICATIONS
5520 WHIPPLE AVE. NW
CANTON, OH 44720
ATTN: JUSTIN FREUDEMAN
PHONE: 330-494-9200
EXT: 330-555-3192

THE LOCATION OF THE UNDERGROUND UTILITIES SHOWN ON THE PLANS ARE AS OBTAINED FROM THE OWNERS AS REQUIRED BY SECTION 153.64 O.R.C.

SURVEYING PARAMETERS

USE THE FOLLOWING VERTICAL POSITIONING AND HORIZONTAL POSITIONING PARAMETERS FOR ALL SURVEYING:

VERTICAL POSITIONING

ORTHOMETRIC HEIGHT DATUM: NAVD88
GEOID: GEOID12A

HORIZONTAL POSITIONING

REFERENCE FRAME: NAD83 (2011)
ELLIPSOID: GRS80
MAP PROJECTION: LAMBERT CONFORMAL CONIC
COORDINATE SYSTEM: OHIO STATE PLANE, NORTH ZONE (3401)
ORIGIN OF COORDINATE SYSTEM: 0,0
COMBINED SCALE FACTOR: 0.99991936620 (SR 21)
0.99990544084 (SR 172)

UNITS ARE IN U.S. SURVEY FEET. USE THE FOLLOWING CONVERSION FACTOR: 1 METER = 3.280833333 U.S. SURVEY FEET.

WORK LIMITS

THE WORK LIMITS SHOWN ON THESE PLANS ARE FOR PHYSICAL CONSTRUCTION ONLY. PROVIDE THE INSTALLATION AND OPERATION OF ALL WORK ZONE TRAFFIC CONTROL AND WORK ZONE TRAFFIC CONTROL DEVICES REQUIRED BY THESE PLANS WHETHER INSIDE OR OUTSIDE THESE WORK LIMITS.

CLEARING AND GRUBBING

ALTHOUGH THERE ARE NO TREES OR STUMPS SPECIFICALLY MARKED FOR REMOVAL WITHIN THE LIMITS OF THE PROJECT, A LUMP SUM QUANTITY IS INCLUDED IN THE GENERAL SUMMARY FOR ITEM 201, CLEARING AND GRUBBING. ALL PROVISIONS AS SET FORTH IN THE SPECIFICATIONS UNDER THIS ITEM ARE INCLUDED IN THE LUMP SUM PRICE BID FOR ITEM 201, CLEARING AND GRUBBING.

ITEM 441 - ASPHALT CONCRETE SURFACE COURSE, TYPE 1 (448), AS PER PLAN, PG64-22

FOLLOW SPECIFICATION 703.05 EXCEPT DO NOT USE COARSE AGGREGATE FROM A SOURCE DESIGNATED 'SR' OR 'SRH' ACCORDING TO THE OFFICE OF MATERIALS MANAGEMENT (OMM) IN ANY JOB MIX FORMULA (JMF) FOR THIS ITEM.

ITEM 304 - AGGREGATE BASE, AS PER PLAN

GRANULATED SLAB (GS) SHALL NOT BE PERMITTED FOR THIS ITEM. ALL OTHER REQUIREMENTS OF SECTIONS 304 AND 703.17 OF THE CONSTRUCTION AND MATERIAL SPECIFICATIONS SHALL STILL BE APPLICABLE.

ITEM 408 - PRIME COAT, AS PER PLAN

APPLY "MC-70" AT A RATE OF 0.4 GALLONS PER SQUARE YARD, OR AS DETERMINED BY THE ENGINEER, TO THE COMPLETED COMPACTED AGGREGATE SHOULDER.

ITEM 606 - ANCHOR ASSEMBLY, MGS TYPE E

THIS ITEM SHALL CONSIST OF FURNISHING AND INSTALLING ANY OF THE GUARDRAIL END TERMINALS FOR TYPE MGS GUARDRAIL AS LISTED ON ROADWAY ENGINEERING'S WEB PAGE UNDER ROADSIDE SAFETY DEVICES FOR APPROVED GUARDRAIL END TREATMENTS. INSTALLATION SHALL BE AT THE LOCATIONS SPECIFIED IN THE PLANS, IN ACCORDANCE WITH THE MANUFACTURER'S SPECIFICATIONS.

THE FACE OF THE TYPE E IMPACT HEAD SHALL BE COVERED WITH A SHEET OF TYPE G REFLECTIVE SHEETING, PER C&MS 730.19.

REFER TO THE MANUFACTURER'S INSTRUCTIONS REGARDING THE INSTALLATION OF, AND THE GRADING AROUND THE FOUNDATION TUBES AND GROUND STRUT. THE TOP OF ANY FOUNDATION TUBE SHOULD BE LESS THAN 4 INCHES ABOVE THE GROUND. THE PLACEMENT OF THE FOUNDATION TUBES SHOULD BE AN APPROPRIATE DEPTH BELOW THE LEVEL LINE IN ORDER TO MAINTAIN THE FINISHED GUARDRAIL HEIGHT OF 31 INCHES FROM THE EDGE OF THE SHOULDER.

ON-SITE GRADING IS REQUIRED IF THE TOP OF THE FOUNDATION TUBES OR TOP OF THE GROUND STRUT DOES PROJECT MORE THAN 4 INCHES ABOVE THE GROUND LINE.

PAYMENT FOR THE ABOVE WORK SHALL BE MADE AT THE UNIT PRICE BID FOR ITEM 606, ANCHOR ASSEMBLY, MGS TYPE E, EACH, AND SHALL INCLUDE ALL LABOR, TOOLS, EQUIPMENT AND MATERIALS NECESSARY TO CONSTRUCT A COMPLETE AND FUNCTIONAL ANCHOR ASSEMBLY SYSTEM, INCLUDING ALL RELATED TRANSITIONS, REFLECTIVE SHEETING, HARDWARE, GRADING, EMBANKMENT AND EXCAVATION NOT SEPARATELY SPECIFIED, AS REQUIRED BY THE MANUFACTURER.

ITEM 617 - COMPACTED AGGREGATE, AS PER PLAN

IN LOW SHOULDER AREAS EXCEEDING 1", AND ADJACENT TO THE SAFETY EDGE, OR AS DIRECTED BY THE ENGINEER, RECYCLED ASPHALT PAVEMENT (RAP) SHALL BE USED IN AREAS ADJACENT TO THE PAVED BERM. THE RAP SHALL HAVE A MINIMUM PG CONTENT OF 4.5% AND MEET THE FOLLOWING GRADATION. ONCE THE STOCKPILE MEETS THE GRADATION, THE PG CONTENT OF THE RAP SHALL BE DETERMINED PER 441.03. THE RAP ANALYSIS MUST BE SUBMITTED TO THE ENGINEER FOR APPROVAL 2 WEEKS PRIOR TO USE. METHOD OF MEASUREMENT SHALL BE AS PER 617.06. PLACEMENT AND COMPACTION SHALL MEET THE REQUIREMENTS OF ITEM 617. ALL MATERIALS, LABOR, EQUIPMENT, TOOLS AND INCIDENTALS NECESSARY TO COMPLETE THE WORK SHALL BE INCLUDED IN THE UNIT PRICE BID FOR ITEM 617 COMPACTED AGGREGATE, AS PER PLAN.

MODIFIED GRADATION SHALL APPLY:

SIEVE	TOTAL PERCENT PASSING
1-½"	100
¾"	50-100
NO. 4	35-70
NO. 30	9-33
NO. 200	0-13

CONSTRUCTION AND DEMOLITION DEBRIS

THE CONTRACTOR SHALL TAKE PRECAUTIONS TO AVOID AND/OR LIMIT CONSTRUCTION AND DEMOLITION DEBRIS FROM ENTERING WETLANDS AND STREAMS. ANY DEBRIS THAT DOES FALL INTO WETLANDS AND/OR STREAMS SHALL BE REMOVED AS SOON AS POSSIBLE WITHIN 72 HOURS.

SEEDING AND MULCHING

THE FOLLOWING QUANTITIES ARE PROVIDED TO PROMOTE GROWTH AND CARE OF PERMANENT SEEDE AREAS:

	(SR 21)	(SR 172)	
ITEM 659 - SOIL ANALYSIS TEST	2	2	EACH
ITEM 659 - TOPSOIL	107	49	CY
ITEM 659 - REPAIR SEEDING AND MULCHING	48	22	SY
ITEM 659 - COMMERCIAL FERTILIZER	0.13	0.06	TON
ITEM 659 - LIME	0.20	0.09	ACRES
ITEM 659 - WATER	5	2	M GAL.

SEEDING AND MULCHING SHALL BE APPLIED TO ALL AREAS OF EXPOSED SOIL BETWEEN THE RIGHT-OF-WAY LINES, AND WITHIN THE CONSTRUCTION LIMITS FOR AREAS OUTSIDE THE RIGHT-OF-WAY LINES COVERED BY WORK AGREEMENT OR SLOPE EASEMENT. QUANTITY CALCULATIONS FOR SEEDING AND MULCHING ARE BASED ON THESE LIMITS.

FARM DRAINS

ALL FARM DRAINS, WHICH ARE ENCOUNTERED DURING CONSTRUCTION, SHALL BE PROVIDED WITH UNOBSTRUCTED OUTLETS. EXISTING COLLECTORS WHICH ARE LOCATED BELOW THE ROADWAY DITCH ELEVATIONS, AND WHICH CROSS THE ROADWAY, SHALL BE REPLACED WITHIN THE RIGHT OF WAY LIMITS BY ITEM 611 CONDUIT, TYPE B, ONE COMMERCIAL SIZE LARGER THAN THE EXISTING CONDUIT.

EXISTING COLLECTORS AND ISOLATED FARM DRAINS, WHICH ARE ENCOUNTERED ABOVE THE ELEVATION OF ROADWAY DITCHES, SHALL BE OUTLETTED INTO THE ROADWAY DITCH BY 611 TYPE F CONDUIT. THE OPTIMUM OUTLET ELEVATION SHALL BE ONE FOOT ABOVE THE FLOWLINE ELEVATION OF THE DITCH. LATERAL FIELD TILES WHICH CROSS THE ROADWAY SHALL BE INTERCEPTED BY 611, TYPE E CONDUIT, AND CARRIED IN A LONGITUDINAL DIRECTION TO AN ADEQUATE OUTLET OR ROADWAY CROSSING.

THE LOCATION, TYPE, SIZE AND GRADE OF REPLACEMENTS SHALL BE DETERMINED BY THE ENGINEER AND PAYMENT SHALL BE MADE ON FINAL MEASUREMENTS.

EROSION CONTROL PADS AND ANIMAL GUARDS SHALL BE PROVIDED AT THE OUTLET END OF ALL FARM DRAINS AS PER STANDARD CONSTRUCTION DRAWING DM-1.1, EXCEPT WHEN THEY OUTLET INTO A DRAINAGE STRUCTURE. PAYMENT FOR THE EROSION CONTROL PADS AND ANIMAL GUARDS AND ANY NECESSARY BENDS OR BRANCHES SHALL BE INCLUDED FOR PAYMENT IN THE PERTINENT CONDUIT ITEMS.

THE FOLLOWING ESTIMATED QUANTITIES HAVE BEEN INCLUDED IN THE GENERAL SUMMARY FOR THE WORK NOTED ABOVE:

ITEM 611, 6" CONDUIT, TYPE B 100 FT.

ITEM 611, 6" CONDUIT, TYPE E 100 FT.

ITEM 611, 6" CONDUIT, TYPE F 100 FT.

ITEM 601, ROCK CHANNEL PROTECTION, TYPE C W/ FILTER 3 CY

CALCULATED MGM
CHECKED TWG

GENERAL NOTES

STA-21-4.46
STA-172-4.20

P:\ODT\04\0009_04-7_STA-21_172-4.46_4.20\95369_STA-21_172-4.46\Design\Roadway\Sheets\95369_GN001.dgn Sheet 8/11/2017 9:35:45 AM CMT008

REVIEW OF DRAINAGE FACILITIES

BEFORE ANY WORK IS STARTED ON THE PROJECT AND AGAIN BEFORE FINAL ACCEPTANCE BY THE STATE, REPRESENTATIVES OF THE STATE AND THE CONTRACTOR, ALONG WITH LOCAL REPRESENTATIVES, SHALL MAKE AN INSPECTION OF ALL EXISTING SEWERS WHICH ARE TO REMAIN IN SERVICE AND WHICH MAY BE AFFECTED BY THE WORK. THE CONDITION OF THE EXISTING CONDUITS AND THEIR APPURTENANCE SHALL BE DETERMINED FROM FIELD OBSERVATIONS. RECORDS OF THE INSPECTION SHALL BE KEPT IN WRITING BY THE STATE.

ALL NEW CONDUITS, INLETS, CATCH BASINS, AND MANHOLES CONSTRUCTED AS A PART OF THE PROJECT SHALL BE FREE OF ALL FOREIGN MATTER AND IN A CLEAN CONDITION BEFORE THE PROJECT WILL BE ACCEPTED BY THE STATE.

ALL EXISTING SEWERS INSPECTED INITIALLY BY THE ABOVE MENTIONED PARTIES SHALL BE MAINTAINED AND LEFT IN A CONDITION REASONABLY COMPARABLE TO THAT DETERMINED BY THE ORIGINAL INSPECTION. ANY CHANGE IN THE CONDITION RESULTING FROM THE CONTRACTOR'S OPERATIONS SHALL BE CORRECTED BY THE CONTRACTOR TO THE SATISFACTION OF THE ENGINEER.

PAYMENT FOR ALL OPERATIONS DESCRIBED ABOVE SHALL BE INCLUDED IN THE CONTRACT PRICE FOR THE PERTINENT 611 CONDUIT ITEMS.

CROSSINGS AND CONNECTIONS TO EXISTING PIPES AND UTILITIES

WHERE PLANS PROVIDE FOR A PROPOSED CONDUIT TO BE CONNECTED TO, OR CROSS OVER OR UNDER AN EXISTING SEWER OR UNDERGROUND UTILITY, THE CONTRACTOR SHALL LOCATE THE EXISTING PIPES OR UTILITIES BOTH AS TO LINE AND GRADE BEFORE STARTING TO LAY THE PROPOSED CONDUIT.

IF IT IS DETERMINED THAT THE ELEVATION OF THE EXISTING CONDUIT, OR EXISTING APPURTENANCE TO BE CONNECTED, DIFFERS FROM THE PLAN ELEVATION OR RESULTS IN A CHANGE IN THE PLAN CONDUIT SLOPE, THE ENGINEER SHALL BE NOTIFIED BEFORE STARTING CONSTRUCTION OF ANY PORTION OF THE PROPOSED CONDUIT WHICH WILL BE AFFECTED BY THE VARIANCE IN THE EXISTING ELEVATIONS.

IF IT IS DETERMINED THAT THE PROPOSED CONDUIT WILL INTERSECT AN EXISTING SEWER OR UNDERGROUND UTILITY IF CONSTRUCTED AS SHOWN ON THE PLAN, THE ENGINEER SHALL BE NOTIFIED BEFORE STARTING CONSTRUCTION OF ANY PORTION OF THE PROPOSED CONDUIT WHICH WOULD BE AFFECTED BY THE INTERFERENCE WITH AN EXISTING FACILITY.

PAYMENT FOR ALL THE OPERATIONS DESCRIBED ABOVE SHALL BE INCLUDED IN THE CONTRACT PRICE FOR THE PERTINENT 611 CONDUIT ITEM.

CONSTRUCTION NOISE

ACTIVITIES AND LAND USE ADJACENT TO THIS PROJECT MAY BE AFFECTED BY CONSTRUCTION NOISE. IN ORDER TO MINIMIZE ANY ADVERSE CONSTRUCTION NOISE IMPACTS, DO NOT OPERATE POWER-OPERATED CONSTRUCTION-TYPE DEVICES BETWEEN THE HOURS OF 8PM AND 7AM. IN ADDITION, DO NOT OPERATE AT ANY TIME ANY DEVICE IN SUCH A MANNER THAT THE NOISE CREATED SUBSTANTIALLY EXCEEDS THE NOISE CUSTOMARILY AND NECESSARILY ATTENDANT TO THE REASONABLE AND EFFICIENT PERFORMANCE OF SUCH EQUIPMENT.

COMMUNITY NOTIFICATION

THE CONTRACTOR WILL ADVISE THE ODOT PROJECT ENGINEER A MINIMUM OF TWENTY-ONE (21) DAYS PRIOR TO THE START OF CONSTRUCTION ACTIVITIES. THE CONTRACTOR MUST ALSO PROVIDE NOTIFICATION TO THE ODOT PROJECT ENGINEER A MINIMUM OF TWENTY-ONE (21) DAYS PRIOR TO ANY LANE RESTRICTIONS OR CLOSURES. THE ODOT PROJECT ENGINEER WILL FORWARD THIS INFORMATION TO THE ODOT DISTRICT PUBLIC INFORMATION OFFICER FOR USE TO NOTIFY EMERGENCY SERVICES AND THE PUBLIC A MINIMUM OF FOURTEEN (14) DAYS PRIOR TO THE START OF PROJECT CONSTRUCTION. INCLUDED IN THIS NOTIFICATION WILL BE THE PROPOSED LANE RESTRICTIONS, ROAD CLOSURES AND DETOURS REQUIRED BY THE PROJECT.

BEST MANAGEMENT PRACTICES

WATER COLUMN AND SEDIMENTATION IMPACTS SHALL BE KEPT TO A MINIMUM THROUGH THE USE OF BEST MANAGEMENT PRACTICES FOR SOIL EROSION AND SEDIMENTATION CONTROL. ALL SOIL EROSION AND SEDIMENT CONTROL MEASURES SHALL BE IN PLACE PRIOR TO ANY EXCAVATION, GRADING OR FILLING OPERATIONS AND INSTALLATION OF PROPOSED STRUCTURES OR UTILITIES. THEY SHALL REMAIN IN PLACE UNTIL CONSTRUCTION IS COMPLETED AND THE AREA IS STABILIZED AS ACCEPTED BY THE ENGINEER.

THE CONTRACTOR SHALL TAKE ALL PRECAUTIONS NECESSARY TO PREVENT ANY INCIDENTAL DISCHARGES ASSOCIATED WITH THE EXCAVATION AND HAULING OF MATERIAL FROM STREAMS AND DITCHES. THIS PERTAINS TO ANY EXCAVATION OPERATION SUCH AS, FOUNDATION, PIER OR ABUTMENT EXCAVATION, EXCAVATION FOR EROSION AND SCOUR REPAIR, CHANNEL CLEAN OUT AND FOR ROCK CHANNEL PROTECTION. ALL MATERIALS REMOVED FROM STREAMS AND/OR DITCHES MUST BE IMMEDIATELY REMOVED TO AN UPLAND SITE AND STABILIZED (I.E., SEEDED) TO PREVENT REDISTRIBUTION INTO ANY WATERS OF THE UNITED STATES. IMMEDIATE REMOVAL IS DEFINED BY THE UNITED STATES ARMY CORPS OF ENGINEERS AS DEPOSITING THE REMOVED MATERIALS DIRECTLY INTO A TRUCK AND REMOVING THE MATERIAL FROM THE SITE. THE CONTRACTOR SHALL UTILIZE AN APPROVED DISPOSAL SITE FOR THE DISPOSAL OF ALL WASTE FILL MATERIAL. THE APPROVED DISPOSAL SITE SHALL NOT INCLUDE ANY WETLANDS, STREAMBANKS OR RIVERBANKS OR ANY 100-YEAR FLOOD PLAINS. PLACEMENT OF REMOVED MATERIALS INTO A WETLANDS OR ON THE BANKS OF A STREAM EVEN TEMPORARILY IS CONSIDERED A FILL AND REQUIRES A PERMIT ACTION.

NATURAL BUFFERS ADJACENT TO STREAMS AND WETLANDS SHALL BE PRESERVED TO THE MAXIMUM EXTENT PRACTICABLE. EXISTING RIPARIAN HABITATS SHOULD BE MAINTAINED TO THE MAXIMUM EXTENT PRACTICABLE AND EQUIPMENT STAGING AREAS SHALL BE KEPT WELL AWAY FROM STREAMS AND WETLANDS TO THE EXTENT PRACTICABLE. ODOT CONSTRUCTION AND MATERIALS SPECIFICATIONS SECTION 107.10 (PROTECTION AND RESTORATION OF PROPERTY) PROHIBIT THE CONTRACTOR FROM CREATING STAGING AREAS NEAR STREAMS/WETLANDS. AREAS DISTURBED BY THE PROJECT SHALL BE SEEDED/REVEGETATED WITH PLANT SPECIES AND MULCHED DURING CONSTRUCTION TO ENCOURAGE ESTABLISHMENT OF VEGETATION COVER, DECREASE EROSION AND PREVENT EROSION OF SEDIMENTS INTO WATERS OF THE UNITED STATES.

ENDANGERED BAT HABITAT REMOVAL

THE PROJECT IS LOCATED WITHIN THE KNOWN HABITAT RANGES OF THE FEDERALLY LISTED AND PROTECTED INDIANA BAT AND NORTHERN LONG-EARED BAT. NO TREES SHALL BE REMOVED UNDER THIS PROJECT FROM APRIL 1 THROUGH SEPTEMBER 30. ALL NECESSARY TREE REMOVAL SHALL OCCUR FROM OCTOBER 1 THROUGH MARCH 31. THIS REQUIREMENT IS NECESSARY TO AVOID AND MINIMIZE IMPACT TO THESE SPECIES AS REQUIRED BY THE ENDANGERED SPECIES ACT. FOR THE PURPOSES OF THIS NOTE, A TREE IS DEFINED AS A LIVE, DYING, OR DEAD WOODY PLANT, WITH A TRUNK THREE INCHES OR GREATER IN DIAMETER AT A HEIGHT OF 4.5 FEET ABOVE THE GROUND SURFACE, AND WITH A MINIMUM HEIGHT OF 13 FEET.

PRIOR TO ANY STRUCTURE REPLACEMENT ACTIVITIES, THE UNDERSIDE OF BRIDGE NO. STA-21-0446 AND STA-172-0420 SHALL BE CAREFULLY EXAMINED FOR THE PRESENCE OF BATS, ESPECIALLY FROM APRIL 1 TO SEPTEMBER 30. IF ANY BATS ARE FOUND ROOSTING ON THE UNDERSIDE OF A BRIDGE, THE USFWS, ECOLOGICAL SERVICES DIVISION (614-416-8993), ODOT OFFICE OF ENVIRONMENTAL SERVICES (614-466-7880) AND ODOT DISTRICT 4 ENVIRONMENTAL SECTION (330-786-4930) SHALL BE CONTACTED TO PROVIDE THIS INFORMATION.

SHOULD ADDITIONAL INFORMATION ON LISTED ENDANGERED/THREATENED/POTENTIALLY THREATENED SPECIES OR THEIR CRITICAL HABITAT BECOME AVAILABLE, OR IF NEW INFORMATION REVEALS EFFECTS OF THIS PROJECT THAT WERE NOT PREVIOUSLY CONSIDERED, ODOT WILL REINITIATE CONSULTATION WITH THE USFWS AND ODNR TO ASSESS WHETHER THE PROJECT DETERMINATIONS ARE STILL VALID.

WATERWAY PERMIT DETERMINATION (404/401) - ODOT PROJECTS

ALL PROJECTS INVOLVING JURISDICTIONAL WATERS OF THE UNITED STATES (STREAMS, RIVERS, NON-ISOLATED WETLANDS) AND/OR ISOLATED WETLANDS ARE SUBJECT TO REGULATION UNDER SECTIONS 404 AND 401 OF THE CLEAN WATER ACT, AND POSSIBLY OHIO EPA ISOLATED WETLAND LAW. THE WATERWAY PERMITS CONDITIONS VERIFIED FOR THE PROJECT HAVE BEEN INCORPORATED INTO THE PROJECT CONSTRUCTION PLAN AS SPECIAL PROVISIONS. THE PROJECT CONTRACTOR SHALL REVIEW AND ADHERE TO ALL WATERWAY PERMIT TERMS AND CONDITIONS THROUGHOUT PROJECT CONSTRUCTION.

MECHANICAL EQUIPMENT OPERATION AT STREAM CHANNEL

THE MECHANICAL EQUIPMENT USED TO EXECUTE THE WORK AUTHORIZED HEREIN SHALL BE OPERATED IN SUCH A WAY AS TO MINIMIZE TURBIDITY THAT COULD DEGRADE WATER QUALITY AND ADVERSELY AFFECT AQUATIC PLANT AND ANIMAL LIFE.

PAINTING AND SEALING OPERATIONS

THE CONTRACTOR SHALL TAKE ALL PRECAUTIONS NECESSARY TO PREVENT EPOXY-URETHANE SEALER, PAINT, OR OTHER MATERIALS USED TO REPAIR, CLEAN, SEAL, OR TREAT ANY BRIDGE STRUCTURE FROM ENTERING ANY STREAMS, WETLANDS OR OTHER WATERS OF THE UNITED STATES AND TAKE THE APPROPRIATE ACTIONS IN THE EVENT OF A RELEASE.

PAVEMENT RESTORATION FOR PIPE INSTALLATIONS AND/OR REMOVALS

THE FOLLOWING QUANTITIES HAVE BEEN PROVIDED FOR PAVEMENT RESTORATION FOLLOWING INSTALLATION AND/OR REMOVAL OF PIPES.

S.R. 21
THE BELOW QUANTITIES ARE BASED ON PAVEMENT RESTORATION WIDTH FROM STA. 260+65.00 TO STA. 261+25.00.

ITEM 202 - PAVEMENT REMOVED	210 SY
ITEM 204 - SUBGRADE COMPACTION	149 SY
ITEM 304 - AGGREGATE BASE, AS PER PLAN (T=6")	25 CY
ITEM 304 - AGGREGATE BASE, AS PER PLAN (T=9")	16 CY
ITEM 301 - ASPHALT CONCRETE BASE, PG64-22, (T=9")	53 CY
ITEM 407 - TACK COAT @ 0.055 GAL./SY	12 GAL.
ITEM 441 - ASPHALT CONCRETE SURFACE COURSE, TYPE 1 (448), AS PER PLAN, PG64-22 (T=3")	18 CY

S.R. 172
THE QUANTITIES BELOW ARE BASED ON PAVEMENT RESTORATION WIDTH FROM STA. 220+50.00 TO STA. 221+40.00.

ITEM 202 - PAVEMENT REMOVED	401 SY
ITEM 204 - SUBGRADE COMPACTION	301 SY
ITEM 304 - AGGREGATE BASE, AS PER PLAN (T=6")	50 CY
ITEM 301 - ASPHALT CONCRETE BASE, PG64-22, (T=9")	100 CY
ITEM 407 - TACK COAT @ 0.055 GAL./SY	22 GAL.
ITEM 441 - ASPHALT CONCRETE SURFACE COURSE, TYPE 1 (448), AS PER PLAN, PG64-22 (T=3")	33 CY

THE EXISTING PAVEMENT BUILD-UP CONSISTS OF ASPHALT BASE MATERIALS WITH AN ASPHALT SURFACE.

PROVIDE ANY MATERIALS USED OUTSIDE THE LIMITS STATED ABOVE AT NO ADDITIONAL COST.

RESURFACING AFTER PIPE INSTALLATION

THE FOLLOWING QUANTITIES HAVE BEEN PROVIDED TO RESURFACE THE ROADWAY AFTER THE COMPLETION OF THE CULVERT OR STRUCTURE PLACEMENT. THIS WORK DOES NOT HAVE TO BE COMPLETE DURING THE DETOUR PERIOD.

THE ABOVE QUANTITIES ARE BASED ON A RESURFACING THE WIDTH OF THE PAVEMENT AND SHOULDERS AT THE FOLLOWING STATIONS:

S.R. 21
STA. 260+15.00 TO STA. 260+65.00
STA. 261+25.00 TO STA. 261+75.00

ITEM 254 - PAVEMENT PLANING (T=1½")	353 SY
ITEM 407 - TACK COAT @0.085 GAL./SY	30 GAL.
ITEM 441 - ASPHALT CONCRETE SURFACE COURSE, TYPE 1 (448), AS PER PLAN, PG64-22 (T=1½")	12 CY

S.R. 172
STA. 220+00.00 TO STA. 220+50.00
STA. 221+40.00 TO STA. 221+90.00

ITEM 254 - PAVEMENT PLANING (T=1½")	448 SY
ITEM 407 - TACK COAT @ 0.085 GAL./SY	38 GAL.
ITEM 441 - ASPHALT CONCRETE SURFACE COURSE, TYPE 1 (448), AS PER PLAN, PG64-22 (T=1½")	16 CY

CALCULATED MGM CHECKED TWG

GENERAL NOTES

STA-21-4.46
STA-172-4.20

P:\ODT\04\0009_04-7_STA-21_172-4.46_4.20\95369_STA-21_172-4.46\Design\Roadway\Sheets\95369_GN002.dgn Sheet 8/11/2017 9:35:46 AM CMT008

STRUCTURE IDENTIFICATION SIGN

STRUCTURE IDENTIFICATION SIGNS, I-H25b, WILL BE PLACED ON EACH APPROACH OFF THE RIGHT SHOULDER, FACING TRAFFIC, AND BEHIND GUARDRAIL IF APPLICABLE. A QUANTITY OF ONE SIGN PER APPROACH WILL BE INSTALLED. THE SIGNS WILL HAVE A NON-REFLECTIVE WHITE SHEETING BACKGROUND AND ONLY THE SLM OF THE STRUCTURE.

THE SIGNS WILL BE MOUNTED ON NEW NO. 2 POSTS AND WILL BE INSTALLED AS PER STANDARD CONSTRUCTION DRAWING TC-41.20, MOST CURRENT VERSION. EACH POST WILL BE 7.5' IN LENGTH.

THE EXISTING STRUCTURE IDENTIFICATION SIGN AND POST SHALL BE REMOVED PRIOR TO INSTALLATION OF NEW STRUCTURE IDENTIFICATION SIGNS.

INSTALL SIGNS FOR THE FOLLOWING STRUCTURE:
STA-172-0420 (2 APPROACHES)

THE FOLLOWING QUANTITIES HAVE BEEN INCLUDED FOR EACH APPROACH:

ITEM 630 - SIGN, FLAT SHEET, 730.20	1.0 SF
ITEM 630 - GROUND MOUNTED SUPPORT, NO. 2 POST	7.5 FT
ITEM 630 - REMOVAL OF GROUND MOUNTED SIGN AND DISPOSAL	1 EACH
ITEM 630 - REMOVAL OF GROUND MOUNTED POST SUPPORT AND DISPOSAL	1 EACH

RAISED PAVEMENT MARKERS

THE FOLLOWING QUANTITY HAS BEEN CARRIED TO THE GENERAL SUMMARY:

S.R. 21

ITEM 621 - RPM	2 EACH
ITEM 621 - RAISED PAVEMENT MARKER REMOVED	2 EACH

PAVEMENT MARKINGS

ALL PAVEMENT MARKINGS WILL BE REPLACED TO MATCH THE EXISTING ADJACENT PAVEMENT MARKINGS.

THE FOLLOWING QUANTITIES HAVE BEEN CARRIED TO THE GENERAL SUMMARY:

S.R. 21

ITEM 642 - EDGE LINE, 6"	0.06 MI
ITEM 642 - CENTER LINE	0.03 MI

S.R. 172

ITEM 642 - LANE LINE, 6"	0.07 MI
ITEM 642 - CENTER LINE	0.04 MI

UNRECORDED ACTIVE SANITARY SEWER CONNECTIONS

FURNISH A CONTINUANCE FOR ALL UNRECORDED ACTIVE SANITARY SEWER CONNECTIONS SUCH AS SANITARY, WASTE-WATER, CURTAIN/ GRADIENT DRAINS, AND FOUNDATION FLOOR DRAINS DISTURBED BY THE WORK. FURNISH AN UNOBSTRUCTED CONTINUANCE OF THE UNRECORDED ACTIVE SANITARY SEWER CONNECTIONS TO THE SATISFACTION OF THE ENGINEER. ALL SUCH CONTINUANCE REQUIRES A RIGHT OF WAY USE PERMIT. ALL SANITARY AND SANITARY WASTE-WATER CONTINUANCE MAY ALSO REQUIRE A NPDES PERMIT FROM THE OHIO ENVIRONMENTAL PROTECTION AGENCY. REPORT ALL CONTINUANCE TO THE LOCAL HEALTH DEPARTMENT.

THE FOLLOWING CONDUIT TYPES MAY BE USED: 707.45

THE FOLLOWING ESTIMATED QUANTITIES HAVE BEEN INCLUDED IN THE GENERAL SUMMARY FOR USE AS DIRECTED BY THE ENGINEER FOR THE WORK NOTED ABOVE:

ITEM 611, 6" CONDUIT, TYPE B, 707.45	20 FT.
ITEM 611, 6" CONDUIT, TYPE C, 707.45	20 FT.

COLUMBIA GAS OF OHIO GAS LINE AT STA-21-4.46 SITE

IT IS THE CONTRACTOR'S RESPONSIBILITY TO MAINTAIN THE LATERAL AND SUBJACENT SUPPORT OF COLUMBIA GAS PIPELINE(S), IN COMPLIANCE TO 29 CFR, PART 1926, SUBPART P, (SAFE EXCAVATION & SHORING). ONE-FOOT MINIMUM VERTICAL AND HORIZONTAL CLEARANCE MUST BE MAINTAINED BETWEEN COLUMBIA GAS EXISTING PIPELINE(S) AND ALL OTHER IMPROVEMENTS. EXTREME CARE SHOULD BE TAKEN NOT TO HARM ANY COLUMBIA GAS FACILITY (PIPELINES, ETC.) OR APPURTENANCE (PIPE COATING, TRACER WIRE, CATHODIC PROTECTION TEST STATION WIRES & DEVICES, VALVE BOXES, ETC.). COLUMBIA GAS FACILITIES MUST BE PROTECTED WITH A SNOW FENCE INSTALLED ALONG THE PIPELINE DURING CULVERT CONSTRUCTION. THE CONTRACTOR WILL BE RESPONSIBLE AND LIABLE FOR ENSURING THAT ALL COLUMBIA GAS EXISTING FACILITIES, ABOVE AND BELOW GROUND, REMAIN UNDAMAGED, ACCESSIBLE AND IN WORKING ORDER. THE CONTRACTOR SHALL CALL COLUMBIA GAS 3 BUSINESS DAYS BEFORE EXCAVATING NEAR THE GAS LINE:

COLUMBIA GAS OF OHIO (TRANSMISSION)
ATTN: JACK A. ROHRBAUGH
8462 ST. RT. 179
LAKEVILLE, OHIO 44638
OFFICE: 419-827-2620

THE FOLLOWING ESTIMATED QUANTITY HAS BEEN INCLUDED IN THE GENERAL SUMMARY FOR USE AS DIRECTED BY THE ENGINEER TO INSTALL AND REMOVE SNOW FENCE FOR GAS LINE PROTECTION:

ITEM 607, FENCE, SNOW, AS PER PLAN 100 FT.

CENTERLINE R/W & CONSTRUCTION REFERENCES AND BENCHMARKS S.R. 21

			GRID		GROUND (PROJECT)			
STATION	OFFSET (FT)	SIDE	NORTHING	EASTING	NORTHING	EASTING	ELEVATION	DESCRIPTION
252+31.00	19.30	LT	378900.198	2238859.345	378930.753	2239039.887	961.47	IRON PIN SET W/ ODOT CAP
260+00.00	0.00	℄	379643.147	2239054.352	379673.762	2239234.910		P.O.T.
260+48.92	22.73	RT	379686.499	2239086.443	379717.117	2239267.004	941.57	IRON PIN SET W/ ODOT CAP
260+92.00	16.30	LT					941.77	CHISLED SQUARE ON NE HEADWALL
262+00.00	0.00	℄	379839.053	2239094.537	379869.683	2239275.098		P.O.T.
262+07.82	24.00	LT	379851.539	2239072.596	379882.170	2239253.155	943.44	NAIL SET
273+18.87	31.09	RT	380928.771	2239349.796	380959.489	2239530.378	978.99	IRON PIN SET W/ ODOT CAP

PROJECT SCALE FACTOR: 0.99991936620

CENTERLINE R/W & CONSTRUCTION REFERENCES AND BENCHMARKS S.R. 172

			GRID		GROUND (PROJECT)			
STATION	OFFSET (FT)	SIDE	NORTHING	EASTING	NORTHING	EASTING	ELEVATION	DESCRIPTION
214+00.00	0.00	℄	412819.041	2225659.020	412858.081	2225869.496		P.O.T.
220+39.88	26.38	RT					1042.57	"X" CUT ON EAST RIM OF SAN MH
220+57.37	31.65	LT	412898.190	2226312.307	412937.237	2226522.845	1042.28	IRON PIN SET W/ ODOT CAP
224+53.42	31.44	RT	412863.940	2226711.849	412902.984	2226922.425	1049.19	IRON PIN SET W/ ODOT CAP
228+00.00	0.00	℄	412920.385	2227055.214	412959.434	2227265.822		P.O.T.

PROJECT SCALE FACTOR: 0.99990544084

CALCULATED MGM
CHECKED TWG

GENERAL NOTES

STA-21-4.46
STA-172-4.20

P:\ODT\04\0009_04-7_STA-21_172-4.46_4.20\95369_STA-21_172-4.46\Design\Roadway\Sheets\95369_GN003.dgn Sheet 8/11/2017 9:35:47 AM CMT008

MAINTENANCE OF TRAFFIC

THIS ITEM SHALL CONSIST OF MAINTENANCE OF TRAFFIC ON EXISTING ROADWAYS AND RAMPS IN ACCORDANCE WITH THE OHIO MANUAL OF UNIFORM TRAFFIC CONTROL DEVICES FOR STREETS AND HIGHWAYS, CURRENT EDITION, LATEST REVISION, THE SPECIFICATIONS AND THE FOLLOWING:

1. THE CONTRACTOR SHALL INFORM THE DISTRICT OFFICE (330) 786-2208, EIGHTEEN (18) DAYS PRIOR TO THE BEGINNING OF WORK.

2. A QUANTITY OF 10 CU. YDS. OF ITEM 614 ASPHALT CONCRETE FOR MAINTAINING TRAFFIC SHALL BE PROVIDED FOR USE IN MAINTAINING PAVEMENT, SHOULDERS AND OTHER LOCATIONS AS DIRECTED BY THE ENGINEER.

3. PRIOR TO OPENING TO TRAFFIC EACH LANE SHALL BE IN A SAFE, PASSABLE CONDITION.

DUST CONTROL

THE CONTRACTOR SHALL FURNISH AND APPLY WATER FOR DUST CONTROL AS DIRECTED BY THE ENGINEER. THE FOLLOWING ESTIMATED QUANTITIES HAVE BEEN INCLUDED FOR DUST CONTROL PURPOSES:

ITEM 616, WATER 3 M. GAL

TRAFFIC CONTROL INSPECTOR

THE CONTRACTOR SHALL DESIGNATE AN INDIVIDUAL OTHER THAN THE SUPERINTENDENT AND SUBJECT TO THE APPROVAL OF THE ENGINEER, TO CONTINUOUSLY INSPECT ALL TRAFFIC CONTROL DEVICES WHENEVER CONSTRUCTION WORK IS BEING PERFORMED WITHIN THE WORK LIMITS OF THE PROJECT. THE DESIGNATED INDIVIDUAL SHALL ALSO INSPECT ALL TRAFFIC DEVICES AT THE BEGINNING AND AT THE END OF EACH WORK DAY. THE DESIGNATED INDIVIDUAL OR A QUALIFIED REP- RESENTATIVE SHALL ALSO BE AVAILABLE ON AN AROUND THE CLOCK BASIS TO REPAIR AND/OR REPLACE DAMAGED OR MISS- ING TRAFFIC CONTROL DEVICES. THESE INDIVIDUALS SHALL BE EQUIPPED WITH CELLULAR PHONES AND THEIR NAMES AND PHONE NUMBERS SHALL BE GIVEN TO THE PROJECT ENGINEER AT THE PRE-CONSTRUCTION MEETING. THE DESIGNATED INDIVIDUAL MAY HAVE OTHER CONSTRUCTION RELATED DUTIES AS LONG AS IMMEDIATE ATTENTION IS GIVEN TO TRAFFIC CONTROL. PAYMENT FOR THE SERVICES OF THE TRAFFIC CONTROL INSPECTOR SHALL BE INCLUDED IN THE LUMP SUM PRICE BID FOR ITEM 614 MAINTAINING TRAFFIC.

DETOUR NOTIFICATION [ODOT/ STARK COUNTY ENGINEERS]

THE CONTRACTOR SHALL ADVISE THE ODOT DISTRICT OFFICE (330-786-3148) AND STARK COUNTY ENGINEERS (330-447-6782) EIGHTEEN (18) DAYS IN ADVANCE OF WHEN THE DETOUR ROUTE SHOULD BE IN EFFECT. ALL WORK ZONE DEVICES REQUIRED SHALL BE FURNISHED, ERECTED, MAINTAINED, AND SUBSEQUENTLY REMOVED BY THE CONTRACTOR. PAYMENT FOR ALL WORK ASSOCIATED WITH THE DETOUR SHALL BE INCLUDED UNDER THE LUMP SUM BID FOR ITEM 614, DETOUR SIGNING.

ITEM 614, MAINTAINING TRAFFIC (NOTICE OF CLOSURE SIGN)

NOTICE OF CLOSURE SIGNS (W20-H13),SHALL BE ERECTED BY THE CONTRACTOR PRIOR TO THE SCHEDULED ROAD OR RAMP CLOSURE IN ACCORDANCE WITH THE NOTICE OF CLOSURE TIME TABLE BELOW.

THE SIGNS SHALL BE ERECTED ON THE RIGHT-HAND SIDE OF THE ROAD/RAMP FACING TRAFFIC. THEY SHALL BE PLACED SO AS NOT TO INTERFERE WITH THE VISIBILITY OF ANY OTHER TRAFFIC CONTROL SIGNS. ON ROADWAYS, THEY SHOULD BE ERECTED AT OR NEAR THE POINT OF CLOSURE. THE SIGNS MAY BE ERECTED ANYWHERE ON RAMPS AS LONG AS THEY ARE VISIBLE TO THE MOTORISTS USING THE RAMP. ON ENTRANCE RAMPS, THE SIGN SHALL BE ERECTED WELL IN ADVANCE OF THE MERGE AREA TO AVOID DISTRACTING MOTORISTS.

NOTICE OF CLOSURE SIGN TIME TABLE		
ITEM	DURATION OF CLOSURE	SIGN DISPLAYED TO PUBLIC
RAMP & RAMP CLOSURE	>= 2WEEKS	14 CALENDAR DAYS PRIOR TO CLOSURE
	> 12 HOURS & < 2 WEEKS	7 CALENDAR DAYS PRIOR TO CLOSURE
	<12 HOURS	2 BUSINESS DAYS PRIOR TO CLSOURE

THE SIGN SHALL DISPLAY THE DATE OF THE CLOSURE IN MMM-DD FORMAT AND THE NUMBER OF DAYS OF THE CLOSURE. THE LAST LINE OF THE W20-H13 SIGN LISTS A PHONE NUMBER WHICH A MOTORIST MAY CALL FOR ADDITIONAL INFORMATION. THIS IS TO BE A SPECIFIC OFFICE WITHIN THE DISTRIC RATHER THAN THE GENERAL SWITCHBOARD NUMBER.

W20-H13-60

ITEM 614, MAINTAINING TRAFFIC (TIME LIMITATION ON A DETOUR) (STA-21-4.46)

A MINIMUM OF ONE LANE OF TRAFFIC IN EACH DIRECTION SHALL BE MAINTAINED AT ALL TIMES, EXCEPT FOR A PERIOD NOT TO EXCEED 21 CONSECUTIVE CALENDAR DAYS, WHEN THROUGH TRAFFIC MAY BE DETOURED AS SHOWN ON SHEET ___. A DISINCENTIVE SHALL BE ASSESSED IN THE AMOUNT OF $2,000 FOR EACH CALENDAR DAY THE ROADWAY REMAINS CLOSED TO TRAFFIC BEYOND THE SPECIFIED LIMIT.

ITEM 614, MAINTAINING TRAFFIC (TIME LIMITATION ON A DETOUR) (STA-172-4.20)

A MINIMUM OF ONE LANE OF TRAFFIC IN EACH DIRECTION SHALL BE MAINTAINED AT ALL TIMES, EXCEPT FOR A PERIOD NOT TO EXCEED 30 CONSECUTIVE CALENDAR DAYS, WHEN THROUGH TRAFFIC MAY BE DETOURED AS SHOWN ON SHEET ___. A DISINCENTIVE SHALL BE ASSESSED IN THE AMOUNT OF $2,000 FOR EACH CALENDAR DAY THE ROADWAY REMAINS CLOSED TO TRAFFIC BEYOND THE SPECIFIED LIMIT.

COOPERATION BETWEEN CONTRACTORS

THE CONTRACTOR SHALL BE ADVISED THAT PROJECT:
STA-93-14.44 (PID 95365)
MAY BE ONGOING IN AN AREA IMMEDIATELY ADJACENT TO AND WITHIN THE PROJECT LIMITS OF THIS PROJECT. THE CONTRACTOR SHALL SCHEDULE HIS WORK SO AS TO CAUSE A MINIMUM OF DELAY OR CONFLICT WITH THE OTHER PROJECTS. IN ACCORDANCE WITH 105.08, THE CONTRACTOR SHALL ARRANGE WITH THE OTHER CONTRACTORS APPROVAL OF THE ENGINEER. THE CONTRACTOR SHALL RECIEVE DAILY APPROVALS FROM THE ENGINEER PRIOR TO COMMENCING ANY OPERATIONS. ANY CONFLICT BETWEEN CONTRACTORS INVOLVING WORK SCHEDULES, WORK AREA, OR COOPERATION SHALL BE RESOLVED BY THE ENGINEER. CONPENSATION FOR THE ABOVE COOPERATION SHALL BE INCIDENTAL TO THE VARIOUS PAY ITEMS INCLUDED WITHIN THIS PROJECT.

INTERIM START DATE (STA-172-4.20)

NO WORK ON STRUCTURE STA-172-4.20 SHALL BEGIN PRIOR TO APRIL 1, 2019.

NOTIFICATION OF TRAFFIC RESTRICTIONS

THROUGHOUT THE DURATION OF THE PROJECT, THE CONTRACTOR SHALL NOTIFY THE PROJECT ENGINEER IN WRITING OF ALL TRAFFIC RESTRICTIONS AND UPCOMING MAINTENANCE OF TRAFFIC CHANGES. THE CONTRACTOR SHALL ENSURE THE WRITTEN NOTIFICATION IS SUBMITTED IN A TIMELY MANNER TO ALLOW THE PROJECT ENGINEER TO MEET THE REQUIRED TIME FRAMES SET FORTH IN THE TABLE BELOW TO INFORM THE OFFICE OF COMMUNICATIONS. THIS NOTIFICATION SHALL BE RECEIVED BY THE PROJECT ENGINEER PRIOR TO THE PHYSICAL SETUP OF ANY APPLICABLE SIGNS OR MESSAGE BOARDS.

INFORMATION SHOULD INCLUDE, BUT IS NOT LIMITED TO, ALL AND SHALL LIST THE SPECIFIC LOCATION, TYPE OF WORK, ROAD STATUS, DATE AND TIME OF RESTRICTION, DURATION OF RESTRICTION, NUMBER OF LANES MAINTAINED, NUMBER OF LANES CLOSED, DETOUR ROUTES, IF APPLICABLE, AND ANY OTHER INFORMATION REQUESTED BY THE PROJECT ENGINEER.

NOTICE TO OFFICE OF COMMUNICATIONS TIME TABLE		
ITEM	DURATION OF CLOSURE	NOTICE DUE TO OFFICE OF COMMUNICATIONS
RAMP & RAMP CLOSURES	>= 2WEEKS	21 CALENDAR DAYS PRIOR TO CLOSURE
	> 12 HOURS & < 2 WEEKS	14 CALENDAR DAYS PRIOR TO CLOSURE
	<12 HOURS	4 BUSINESS DAYS PRIOR TO CLSOURE
LANE CLOSURES & RESTRICTIONS	>=2 WEEKS	14 CALENDAR DAYS PRIOR TO CLOSURE
	< 2 WEEKS	2 BUSINESS DAYS PRIOR TO CLSOURE
START OF CONSTRUCTION & TRAFFIC PATTERNS CHANGES	N/A	14 CALENDAR DAYS PRIOR TO IMPLEMENTATION

ANY UNFORESEEN CONDITIONS NOT SPECIFIED IN THE PLANS REQUIRING TRAFFIC RESTRICTIONS SHALL ALSO BE REPORTED TO THE PROJECT ENGINEER USING THE NOTICE TO OFFICE OF COMMUNICATIONS TIME TABLE.

CALCULATED BFR
CHECKED CNC

MAINTENANCE OF TRAFFIC GENERAL NOTES

STA-21-4.46
STA-172-4.20

i:\ProjectData\STA\95369_172-420\Design\Roadway\Sheets\95369_MN001.dgn Sheet 4/10/2017 3:05:56 PM brossi

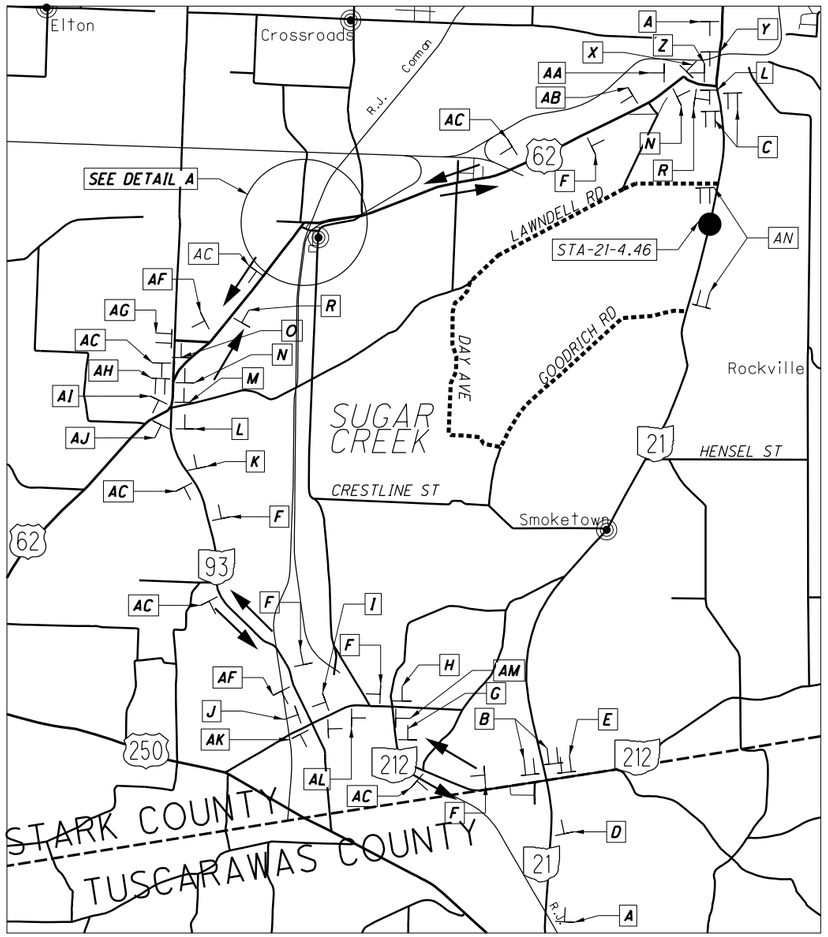

DETOUR ROUTE FOR: STA-21-4.46

DETOUR ROUTE: SR 212 / SR 93 / US 62

CLOSED AS PER SCD MT-101.60

LOCAL DETOUR ROUTE: LAWNDELL RD / DAY AVE / GOODRICH RD

REFER TO THE OHIO MANUAL OF UNIFORM TRAFFIC CONTROL DEVICES, FIGURE 6H-8 (TYPICAL APPLICATION 8), FOR SIGN SPACING.

ON TYPE III BARRICADE WITH TYPE B FLASHERS MOUNTED PER SCD MT-101.60

NOT TO SCALE

A — DETOUR 1500 FT — W20-2-36

B # — ROAD CLOSED MILES AHEAD LOCAL TRAFFIC ONLY — R11-3A-60; DETOUR — M4-10L-48

C # — ROAD CLOSED MILES AHEAD LOCAL TRAFFIC ONLY — R11-3A-60; DETOUR — M4-10R-48

D — JCT 212; DETOUR M4-8-24; 21 M1-5-24-2; M5-1-21

E — DETOUR M4-8-24; 212; 21 M1-5-24-2; M6-1-21; ENTER STARK CO LEAVE TUSCARAWAS CO

F — DETOUR M4-8-24; NORTH M3-1-24; 21 M1-5-24-2

G — 212; DETOUR M4-8-24; 21 M1-5-24-2; M5-1-21

H — DETOUR M4-8-24; 212; 21 M1-5-24-2; M6-1-21

I — JCT 93; DETOUR M4-8-24; 21 M1-5-24-2; M5-1-21

J — 93; DETOUR M4-8-24; 21 M1-5-24-2; M6-1-21

K — JCT 62; DETOUR M4-8-24; 21 M1-5-24-2; M6-3-21

L — DETOUR M4-8-24; 21 M1-5-24-2; M6-1-21

M — EAST 62; NORTH 93; DETOUR M4-8-24; NORTH M3-1-24; 21 M1-5-24-2

N — 62; DETOUR M4-8-24; 21 M1-5-24-2; M5-1-21

DETAIL A

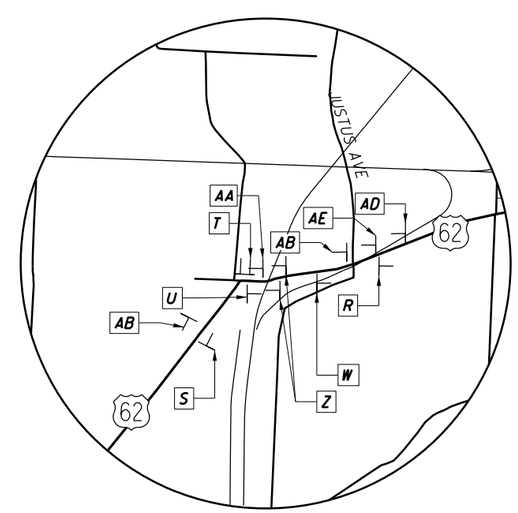

CALCULATED CNC
CHECKED CNC

STA-21-4.46 DETOUR PLAN

STA-21-4.46
STA-172-4.20

0
0

i:\ProjectData\STA\95369_172-420\Design\Roadway\Sheets\95369_MD001.dgn Sheet 4/10/2017 3:05:57 PM brossi

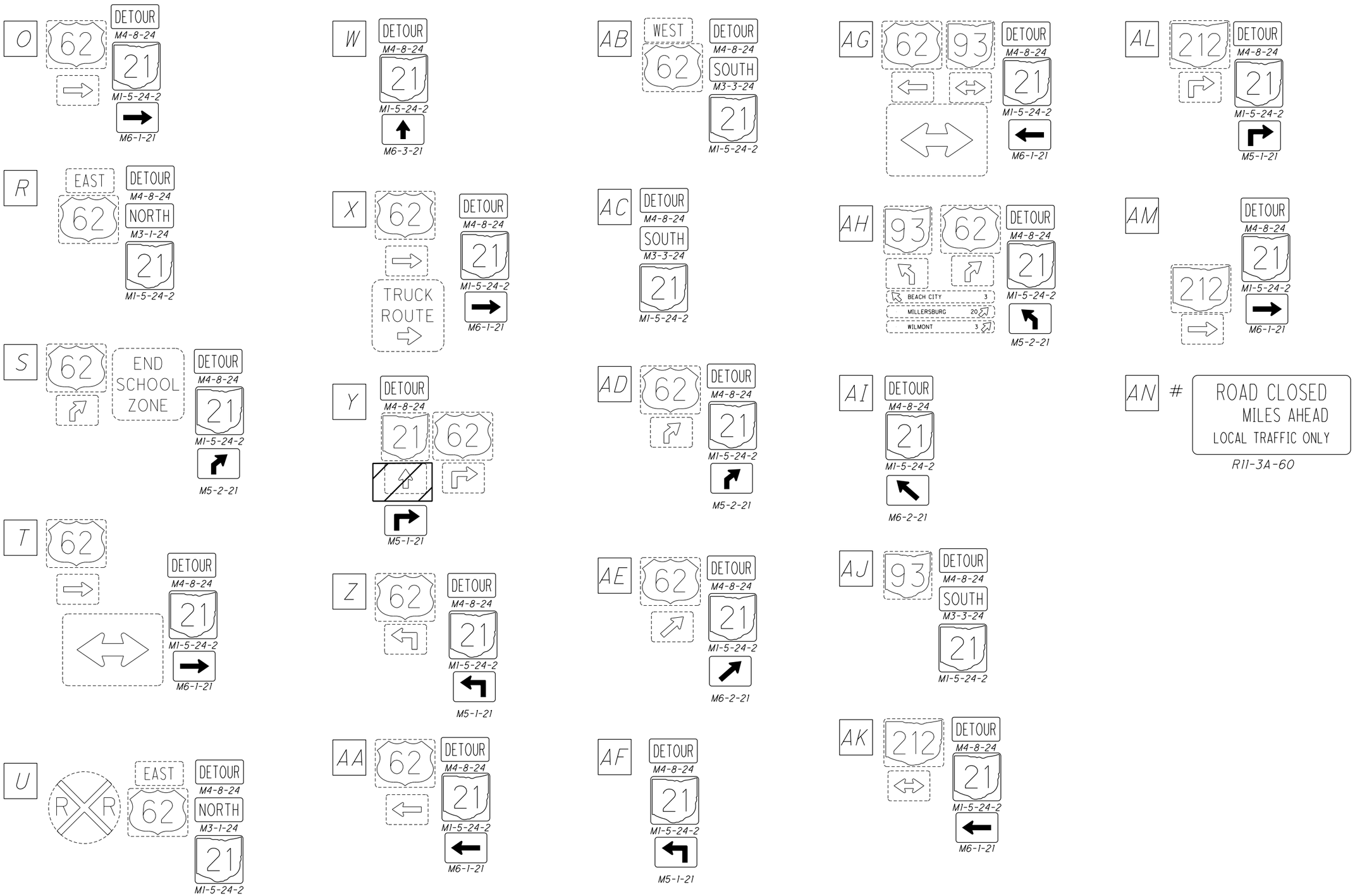

CALCULATED CNC
CHECKED CNC

STA-21-4.46 DETOUR PLAN

STA-21-4.46
STA-172-4.20

0
0

I:\ProjectData\STA\95369_I72-420\Design\Roadway\Sheets\95369_MD001.dgn Sheet 2 4/10/2017 3:05:57 PM brossi

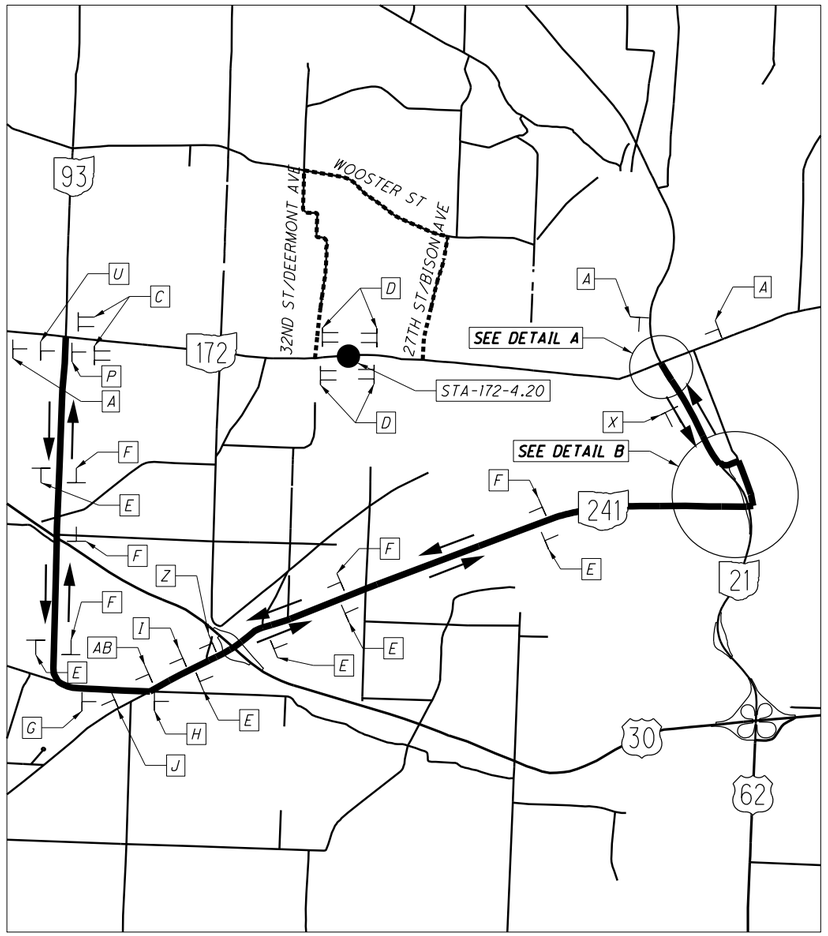

DETOUR ROUTE FOR: STA-172-4.20

NOT TO SCALE

DETOUR ROUTE: SR 93 / SR 241 / SR 21

CLOSED AS PER SCD MT-101.60

LOCAL DETOUR ROUTE: 32ND ST/DEERMONT AVE/WOOSTER ST/BISON AVE/27TH ST

REFER TO THE OHIO MANUAL OF UNIFORM TRAFFIC CONTROL DEVICES, FIGURE 6H-8 (TYPICAL APPLICATION 8), FOR SIGN SPACING.

ON TYPE III BARRICADE WITH TYPE B FLASHERS MOUNTED PER SCD MT-101.60

A — DETOUR 1500 FT — W20-2-36

B # — ROAD CLOSED MILES AHEAD LOCAL TRAFFIC ONLY — R11-3A-60; DETOUR — M4-10L-48

C # — ROAD CLOSED MILES AHEAD LOCAL TRAFFIC ONLY — R11-3A-60; DETOUR — M4-10R-48

D # — ROAD CLOSED MILES AHEAD LOCAL TRAFFIC ONLY — R11-3A-60

E — DETOUR M4-8-24; EAST M3-2-24; 172 M1-5-30-3

F — DETOUR M4-8-24; WEST M3-4-24; 172 M1-5-30-3

G — DETOUR M4-8-24; 172 M1-5-30-3; 93; M5-1-21

H — TO 241 30; DETOUR M4-8-24; 172 M1-5-30-3; M6-1-21

I — CANAL FULTON 9; DETOUR M4-8-24; 172 M1-5-30-3; M5-2-21

DETAIL A

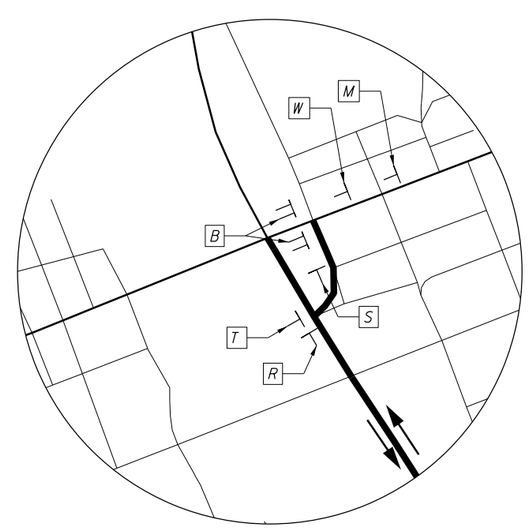

DETAIL B

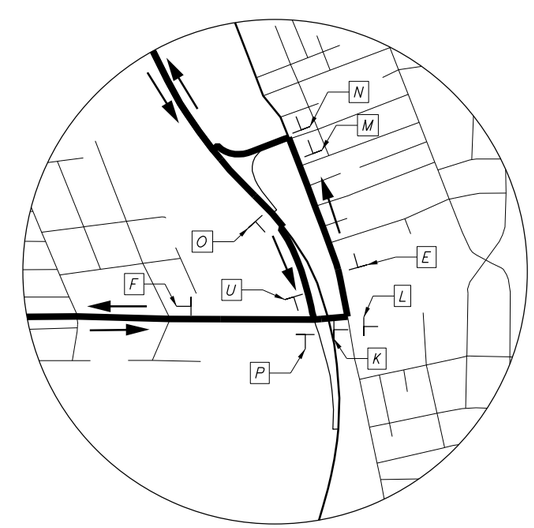

CALCULATED BFR
CHECKED CNC

STA-172-4.20 DETOUR PLAN

STA-21-4.46
STA-172-4.20

0
0

I:\ProjectData\STA\95369_172-420\Design\Roadway\Sheets\95369_MD002.dgn Sheet 4/10/2017 3:05:58 PM brossi

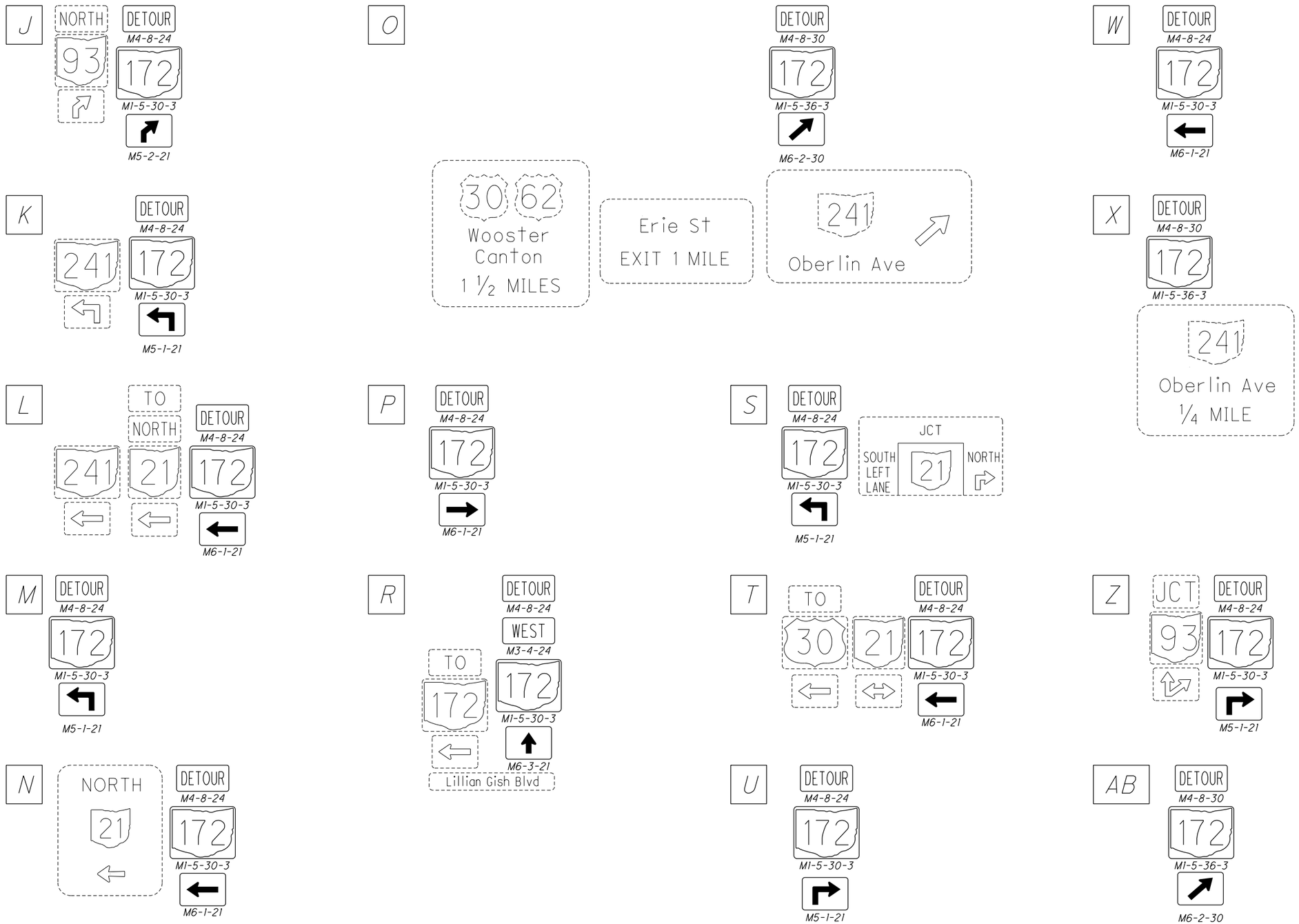

CALCULATED BFR
CHECKED CNC

STA-172-4.20 DETOUR PLAN

STA-21-4.46
STA-172-4.20

0
0

I:\ProjectData\STA\95369_I72-420\Design\Roadway\Sheets\95369_MD002.dgn Sheet2 4/10/2017 3:05:58 PM brossi

SHEET NUM.											PART.			ITEM	ITEM EXT	GRAND TOTAL	UNIT	DESCRIPTION	SEE SHEET NO.
		4	5	6	7	15	19	20	25	31	01/NHS/BR	02/NHS/BR	03/NHS/OT						
																		ROADWAY	
			LS								LS			201	11000	LS		CLEARING AND GRUBBING	
				611				23			424	210		202	23000	634	SY	PAVEMENT REMOVED	
								571			571			202	30000	571	SF	WALK REMOVED	
								79			79			202	32000	79	FT	CURB REMOVED	
								19			19			202	32800	19	SY	CONCRETE SLOPE PROTECTION REMOVED	
								397		174	571			202	35100	571	FT	PIPE REMOVED, 24" AND UNDER	
						325						325		202	38000	325	FT	GUARDRAIL REMOVED	
								2			2			202	58000	2	EACH	MANHOLE REMOVED	
								4			4			202	58100	4	EACH	CATCH BASIN REMOVED	
								1			1			202	98100	1	EACH	REMOVAL MISC.: SANITARY LIFT STATION	
							87		126		126	87		203	10000	213	CY	EXCAVATION	
							25		13		13	25		203	20000	38	CY	EMBANKMENT	
				450							301	149		204	10000	450	SY	SUBGRADE COMPACTION	
						400						400		606	15050	400	FT	GUARDRAIL, TYPE MGS	
						100						100		606	17350	100	FT	GUARDRAIL, TYPE MGS, 25' LONG-SPAN	
						3						3		606	26150	3	EACH	ANCHOR ASSEMBLY, MGS TYPE E	
						1						1		606	26550	1	EACH	ANCHOR ASSEMBLY, MGS TYPE T	
					100							100		607	30001	100	FT	FENCE, SNOW, AS PER PLAN	7
								941			941			608	10000	941	SF	4" CONCRETE WALK	
																		EROSION CONTROL	
						67		124			124	67		601	32100	191	CY	ROCK CHANNEL PROTECTION, TYPE B WITH FILTER	
			3								1	2		601	32200	3	CY	ROCK CHANNEL PROTECTION, TYPE C WITH FILTER	
			4								2	2		659	00100	4	EACH	SOIL ANALYSIS TEST	
			156								49	107		659	00300	156	CY	TOPSOIL	
							961		439		439	961		659	10000	1,400	SY	SEEDING AND MULCHING	
			70								22	48		659	14000	70	SY	REPAIR SEEDING AND MULCHING	
			0.19								0.06	0.13		659	20000	0.19	TON	COMMERCIAL FERTILIZER	
			0.29								0.09	0.2		659	31000	0.29	ACRE	LIME	
			7								2	5		659	35000	7	MGAL	WATER	
											21,000			832	30000	21,000	EACH	EROSION CONTROL	
																		DRAINAGE	
			100								50	50		611	00900	100	FT	6" CONDUIT, TYPE B	
			100								50	50		611	01400	100	FT	6" CONDUIT, TYPE E	
			100								50	50		611	01500	100	FT	6" CONDUIT, TYPE F	
								85			85			611	05900	85	FT	15" CONDUIT, TYPE B	
								15			15			611	06100	15	FT	15" CONDUIT, TYPE C	
								24			24			611	07600	24	FT	18" CONDUIT, TYPE C	
								4			4			611	98150	4	EACH	CATCH BASIN, NO. 3	
								2			2			611	99574	2	EACH	MANHOLE, NO. 3	
																		PAVEMENT	
				801							448	353		254	01000	801	SY	PAVEMENT PLANING, ASPHALT CONCRETE	
				153							100	53		301	46000	153	CY	ASPHALT CONCRETE BASE, PG64-22	
				91							50	41		304	20001	91	CY	AGGREGATE BASE, AS PER PLAN	5
				102							60	42		407	10000	102	GAL	TACK COAT	
		11										11		408	10001	11	GAL	PRIME COAT, AS PER PLAN	5
								8			8			411	10000	8	CY	STABILIZED CRUSHED AGGREGATE	
		1		79							49	31		441	50101	80	CY	ASPHALT CONCRETE SURFACE COURSE, TYPE 1, (448), AS PER PLAN, PG64-22	5
								14			14			452	10010	14	SY	6" NON-REINFORCED CONCRETE PAVEMENT, CLASS QC1	
								138			138			609	26000	138	FT	CURB, TYPE 6	
		2										2		617	10101	2	CY	COMPACTED AGGREGATE, AS PER PLAN	5

CALCULATED MGM
CHECKED
TWG

GENERAL SUMMARY

STA-21-4.46
STA-172-4.20

P:\ODT\04\0009_04-7_STA-21.172-4.46_4.20\95369_STA-21.172-4.46\Design\Roadway\Sheets\95369_GG001.dgn Sheet 8/11/2017 9:35:47 AM CMT008

SHEET NUM.											PART.			ITEM	ITEM EXT	GRAND TOTAL	UNIT	DESCRIPTION	SEE SHEET NO.
						7	8	15	20	31	01/NHS/BR	02/NHS/BR	03/NHS/OT						
																		WATER WORK	
										4			4	SPECIAL	63820168	4	FT	12" WATER MAIN DIP CLASS 52 MECHANICAL JOINTS AND FITTINGS (AQUA)	28
										184			184	SPECIAL	63820174	184	FT	12" WATER MAIN DIP CLASS 52 PUSH ON JOINTS AND FITTINGS (AQUA)	28
										2			2	SPECIAL	63820712	2	EACH	12" X 12" TAPPING SLEEVE, VALVE AND VALVE BOX (AQUA)	28
										2			2	SPECIAL	63820786	2	FT	RETAP AND RECONNECT WATER SERVICE CONNECTION (AQUA)	28
										10			10	SPECIAL	63820884	10	EACH	CUT AND PLUG EXISTING 12" WATER LINE (AQUA)	28
																		SANITARY SEWER	
						20					20			611	00900	20	FT	6" CONDUIT, TYPE B, 707.45	
						20			45		65			611	01100	65	FT	6" CONDUIT, TYPE C, 707.45	
									69		69			611	01800	69	FT	8" CONDUIT, TYPE B, 707.45	
									74		74			611	02000	74	FT	8" CONDUIT, TYPE C, 707.45	
									125		125			611	04600	125	FT	12" CONDUIT, TYPE C, 707.45	
									14		14			611	06100	14	FT	15" CONDUIT, TYPE C, 707.45	
									38		38			611	10601	38	FT	24" CONDUIT, TYPE C, AS PER PLAN, 707.70	26
									5		5			611	99550	5	EACH	MANHOLE, NO. 1	
									1		1			611	99690	1	EACH	MANHOLE, MISC.: CLEANOUT	26
																		TRAFFIC CONTROL	
						2						2		621	00100	2	EACH	RPM	
						2						2		621	54000	2	EACH	RAISED PAVEMENT MARKER REMOVED	
								10				10		626	00110	10	EACH	BARRIER REFLECTOR, TYPE 2, BIDIRECTIONAL	
						15		7.5			15	7.5		630	02100	22.5	FT	GROUND MOUNTED SUPPORT, NO. 2 POST	
								10.5				10.5		630	03100	10.5	FT	GROUND MOUNTED SUPPORT, NO. 3 POST	
						2		2			2	2		630	80100	4	SF	SIGN, FLAT SHEET, 730.20	
						1		2			1	2		630	84900	3	EACH	REMOVAL OF GROUND MOUNTED SIGN AND DISPOSAL	
								1				1		630	85100	1	EACH	REMOVAL OF GROUND MOUNTED SIGN AND REERECTION	
						1		2			1	2		630	86002	3	EACH	REMOVAL OF GROUND MOUNTED POST SUPPORT AND DISPOSAL	
						0.06						0.06		642	00094	0.06	MILE	EDGE LINE, 6"	
						0.07					0.07			642	00194	0.07	MILE	LANE LINE, 6"	
						0.07					0.04	0.03		642	00290	0.07	MILE	CENTER LINE	
																		STRUCTURE 20 FOOT SPAN AND UNDER (STA-21-0446)	
																		FOR STA-21-0446 ESTIMATED QUANTITIES	33
																		STRUCTURE OVER 20 FOOT SPAN (STA-172-0420)	
																		FOR STA-172-0420 ESTIMATED QUANTITIES	39
																		MAINTENANCE OF TRAFFIC	
							LS				LS	LS		614	12420	LS		DETOUR SIGNING	
							10				5	5		614	13000	10	CY	ASPHALT CONCRETE FOR MAINTAINING TRAFFIC	
							3				2	1		616	10000	3	MGAL	WATER	
																		INCIDENTALS	
											LS	LS		614	11000	LS		MAINTAINING TRAFFIC	
											LS	LS		623	10000	LS		CONSTRUCTION LAYOUT STAKES AND SURVEYING	
											LS	LS		624	10000	LS		MOBILIZATION	

CALCULATED MGM
CHECKED TWG

GENERAL SUMMARY

STA-21-4.46
STA-172-4.20

P:\ODT\04\0009_04-7_STA-21.172-4.46-4.20\95369_STA-21.172-4.46\Design\Roadway\Sheets\95369_GG002.dgn Sheet 8/11/2017 9:35:48 AM CMT008

REF. NO.	SHEET NO.	LOCATION	STATION FROM	STATION TO	SIDE	202 GUARDRAIL REMOVED (FT)	601 ROCK CHANNEL PROTECTION, TYPE B WITH FILTER (CY)	606 GUARDRAIL, TYPE MGS (FT)	606 GUARDRAIL, TYPE MGS, 25' LONG-SPAN (FT)	606 ANCHOR ASSEMBLY, MGS TYPE E (EACH)	606 ANCHOR ASSEMBLY, MGS TYPE T (EACH)	626 BARRIER REFLECTOR, TYPE 2, BI-DIRECTIONAL (EACH)	630 GROUND MOUNTED SUPPORT, NO.2 POST (FT)	630 GROUND MOUNTED SUPPORT, NO.3 POST (FT)	630 SIGN, FLAT SHEET, 730.20 (SF)	630 REMOVAL OF GROUND MOUNTED SIGN AND DISPOSAL (EACH)	630 REMOVAL OF GROUND MOUNTED SIGN AND REERECTION (EACH)	630 REMOVAL OF GROUND MOUNTED POST SUPPORT AND DISPOSAL (EACH)
R-1	16	S.R. 21	259+94.80	261+96.57	LT.	175												
R-2	16	S.R. 21	260+37.03	261+56.16	RT.	150												
E-1	16	S.R. 21	260+78.49	261+17.51	RT.		47											
E-2	16	S.R. 21	260+79.90	260+88.92	LT.		7											
E-3	16	S.R. 21	261+04.27	261+16.19	LT.		13											
GR-1	16	S.R. 21	258+84.50	261+58.98	RT.			175	50	1	1	5						
GR-2	16	S.R. 21	259+48.00	263+23.00	LT.			225	50	2		5						
S-1	16	S.R. 21	260+85.00		RT.									10.5	1	1	1	1
S-2	16	S.R. 21	260+97.00		LT.											1		1
S-3	16	S.R. 21	261+09		LT.								7.5		1			
TOTALS CARRIED TO GENERAL SUMMARY						325	67	400	100	3	1	10	7.5	10.5	2	2	1	2

CALCULATED MGM
CHECKED TWG

ROADWAY SUBSUMMARY

STA-21-4.46

STA-21-4.46
STA-172-4.20

P:\ODT\04\0009_04-7_STA-21.172-4.46-4.20\95369_STA-21.172-4.46\Design\Roadway\Sheets\95369_GS021.dgn Sheet 8/11/2017 9:35:49 AM CMT008

BENCHMARKS:

BM #1: ELEV. = 961.47
#5 REBAR SET W/ ODOT CAP @ STA. 252+31.0, 19.3' LT.

BM #2: ELEV. = 941.57
#5 REBAR SET W/ ODOT CAP @ STA. 260+48.9, 22.7' RT.

BM #3: ELEV. = 941.77
CHISLED SQUARE ON N.E. CORNER OF WEST HEADWALL @ STA. 260+92.0, 16.3' LT.

BM #4: ELEV. = 978.99
#5 REBAR SET W/ ODOT CAP @ STA. 273+18.9, 31.1' RT.

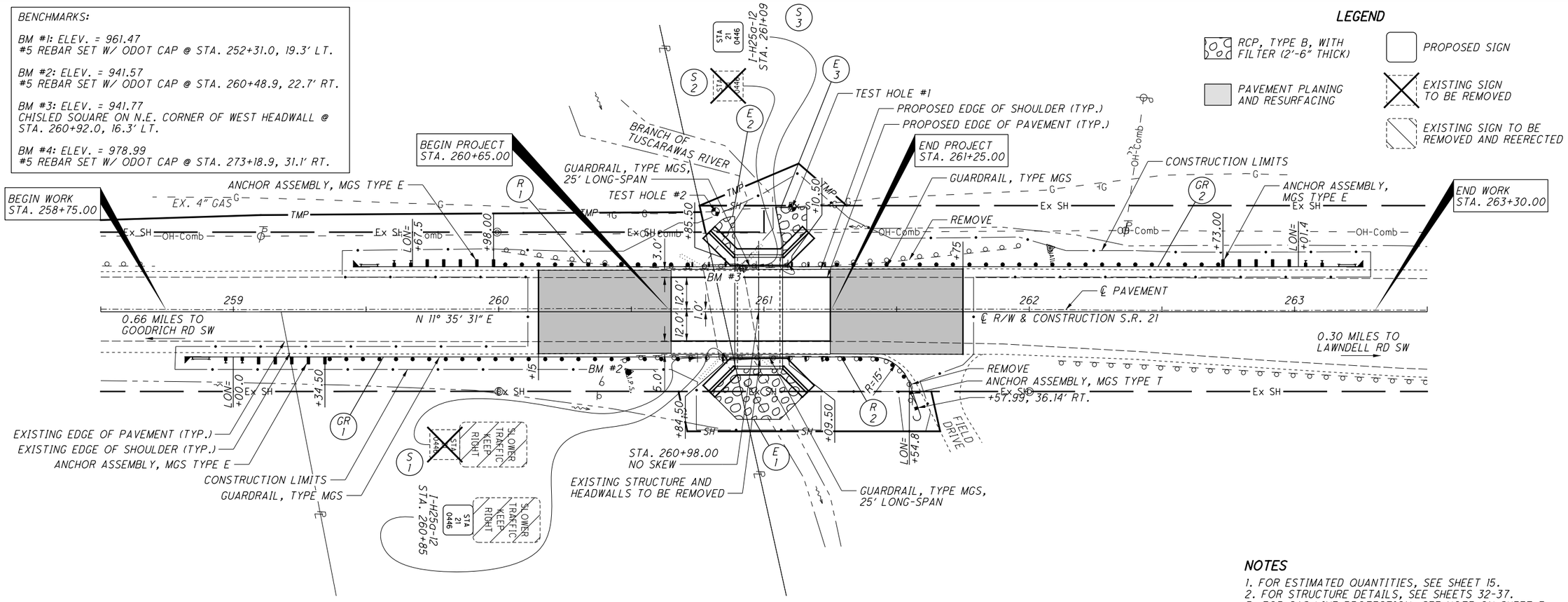

NOTES

1. FOR ESTIMATED QUANTITIES, SEE SHEET 15.
2. FOR STRUCTURE DETAILS, SEE SHEETS 32-37.
3. FOR GAS LINE PROTECTION, SEE NOTE ON SHEET 7.

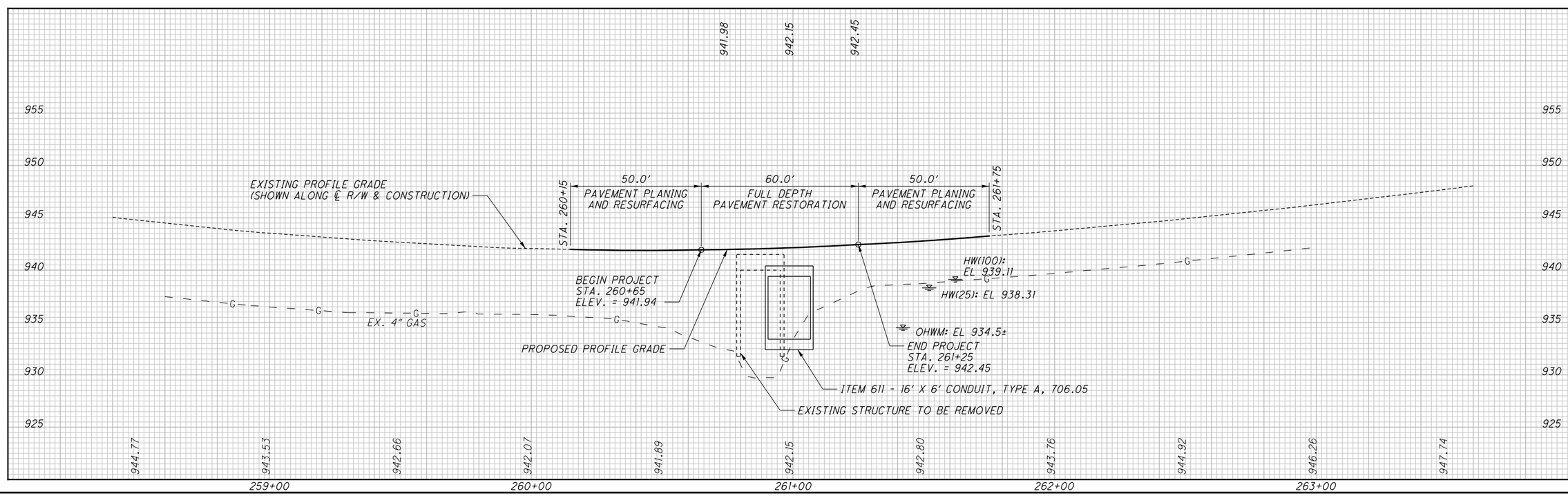

CALCULATED MGM
CHECKED TWG

PLAN AND PROFILE
STA-21-4.46

STA-21-4.46
STA-172-4.20

P:\ODT\04\0009_04-7_STA-21_172-4.46_4.20\95369_STA-21_172-4.46\Design\Roadway\Sheets\95369_GP021.dgn Sheet 8/11/2017 9:35:49 AM CMT008

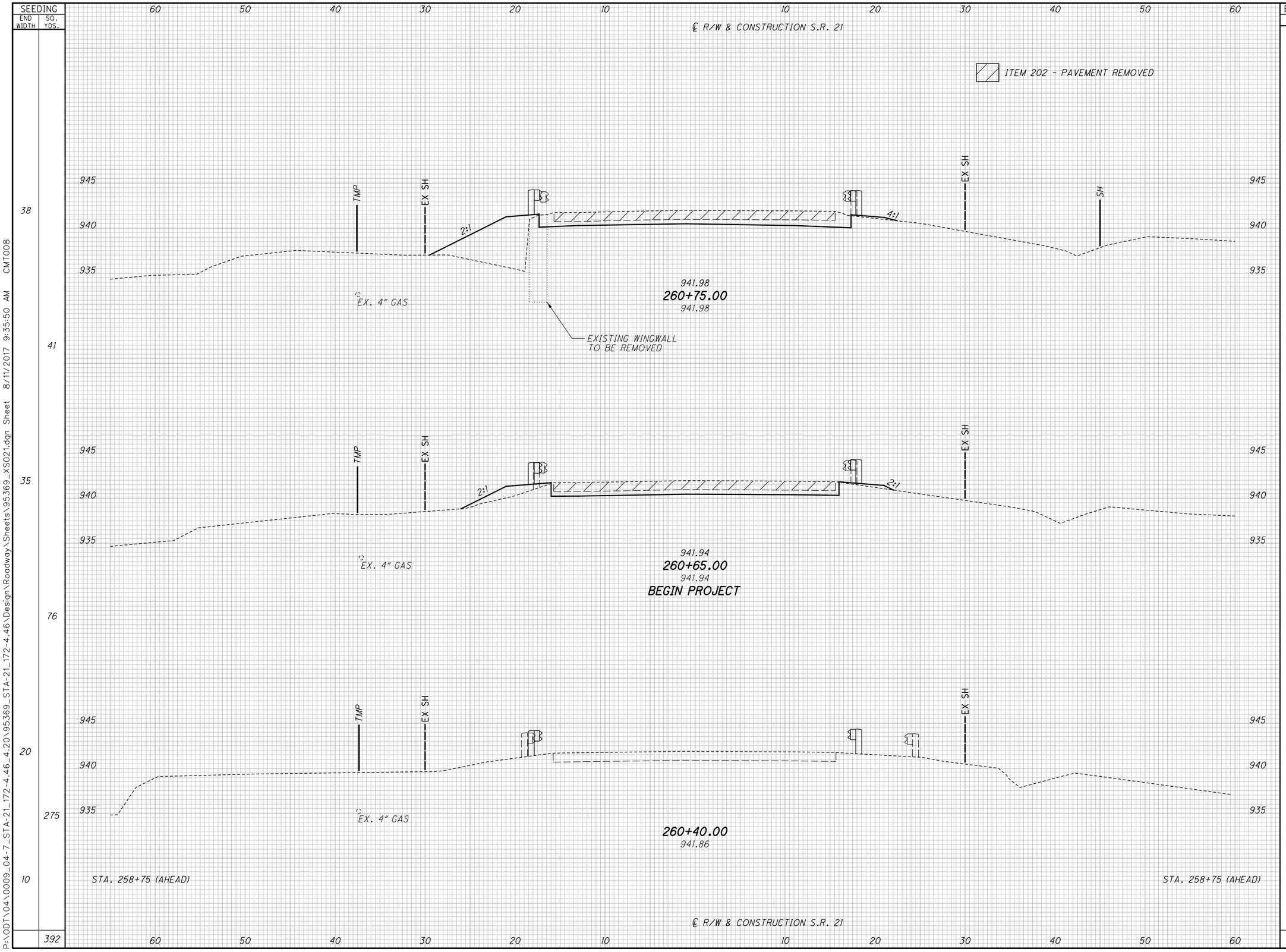

CALCULATED MGM
CHECKED TWG

CROSS SECTIONS - STA-21-4.46
STA. 260+40.00 TO STA. 260+75.00

STA-21-4.46
STA-172-4.20

P:\ODT\04\0009_04-7_STA-21_172-4.46_4.20\95369_STA-21_172-4.46\Design\Roadway\Sheets\95369_XS021.dgn Sheet 8/11/2017 9:35:50 AM CMT008

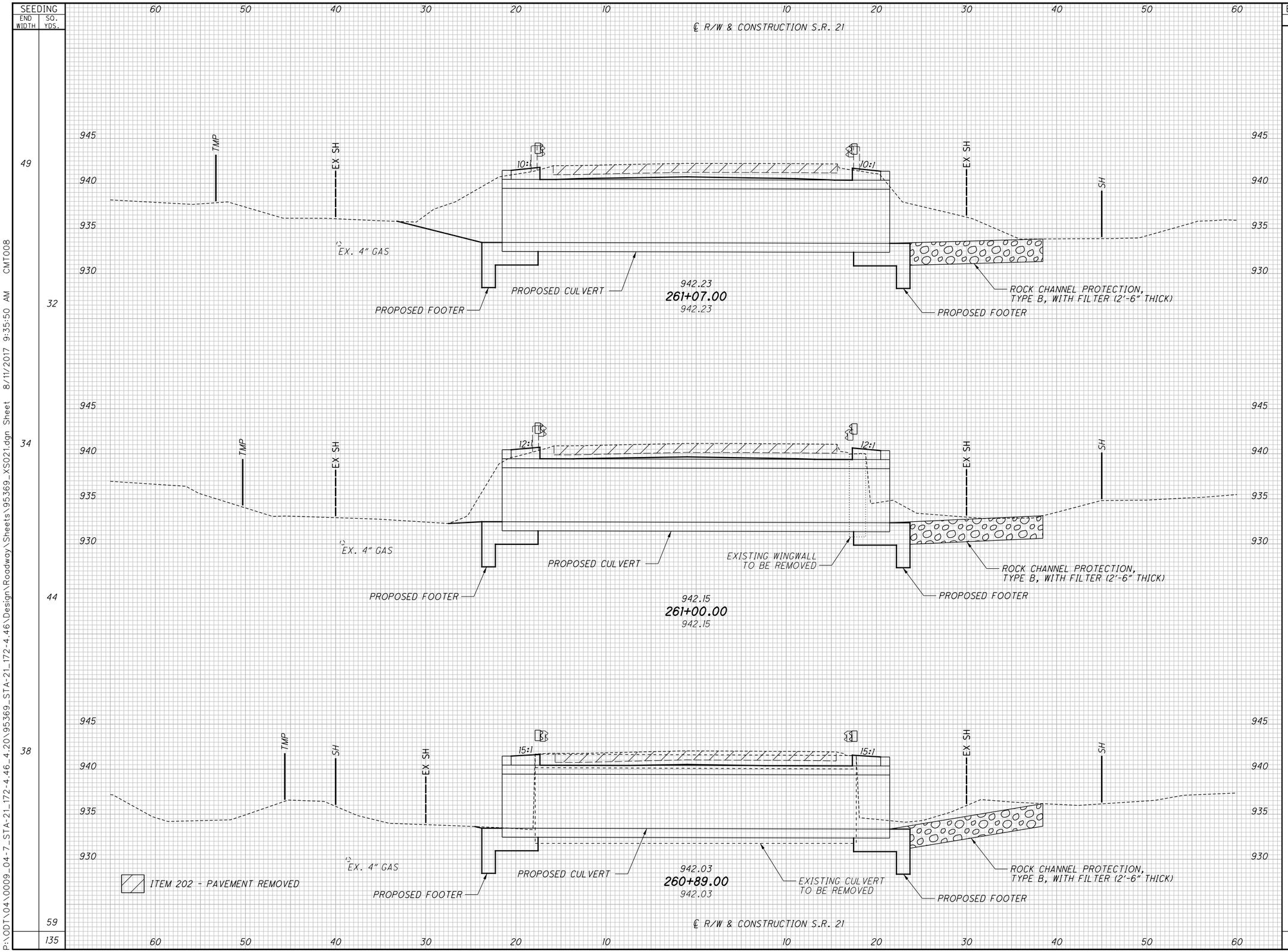

SEEDING END WIDTH	SEEDING SQ. YDS.	END AREA CUT	END AREA FILL	VOLUME CUT	VOLUME FILL
49	32	104	2	19	1
34	44	45	5	12	2
38	59	13	6	9	12
	135			40	15

CALCULATED MGM
CHECKED TWG

CROSS SECTIONS - STA-21-4.46
STA. 260+89.00 TO STA. 261+07.00

STA-21-4.46
STA-172-4.20

P:\ODT\04\0009_04-7_STA-21_172-4.46_4.20\95369_STA-21_172-4.46\Design\Roadway\Sheets\95369_XS021.dgn Sheet 8/11/2017 9:35:50 AM CMT008

SEEDING END WIDTH	SEEDING SQ. YDS.	END AREA CUT	END AREA FILL	VOLUME CUT	VOLUME FILL
10	300	0	0		
20	61	0	0		
24	73	16	0		
	434			40	1
				40	1

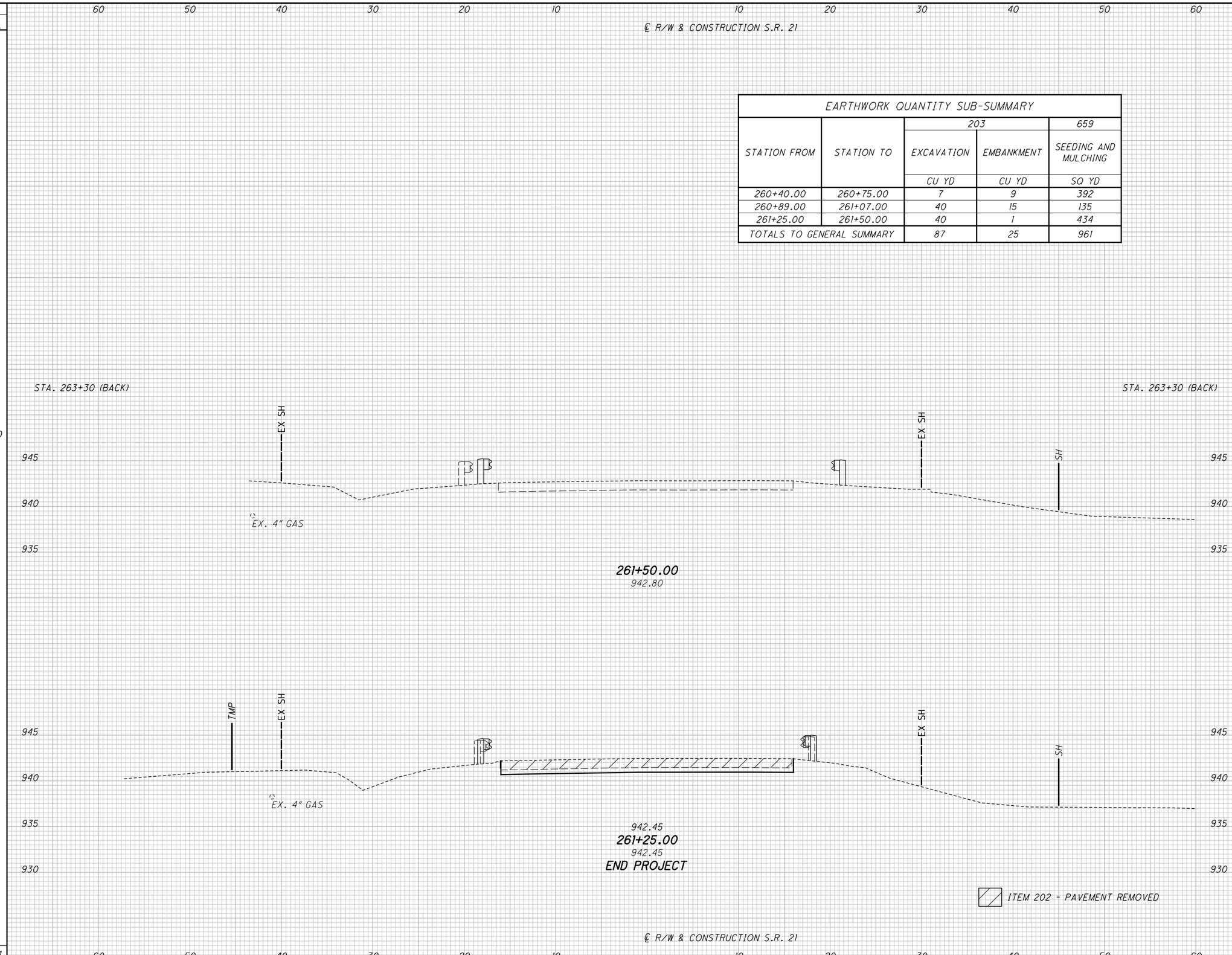

EARTHWORK QUANTITY SUB-SUMMARY

STATION FROM	STATION TO	203 EXCAVATION	203 EMBANKMENT	659 SEEDING AND MULCHING
		CU YD	CU YD	SQ YD
260+40.00	260+75.00	7	9	392
260+89.00	261+07.00	40	15	135
261+25.00	261+50.00	40	1	434
TOTALS TO GENERAL SUMMARY		87	25	961

CALCULATED MGM
CHECKED TWG

CROSS SECTIONS - STA-21-4.46 STA. 261+25.00 TO STA. 261+50.00

STA-21-4.46
STA-172-4.20

P:\ODT\04\0009_04-7_STA-21_172-4.46-4.20\95369_STA-21_172-4.46\Design\Roadway\Sheets\95369_XS021.dgn Sheet 8/11/2017 9:35:51 AM CMT008

REF. NO.	SHEET NO.	LOCATION	STATION FROM	STATION TO	SIDE	202 PAVEMENT REMOVED (SY)	202 WALK REMOVED (SF)	202 CURB REMOVED (FT)	202 PIPE REMOVED, 24" AND UNDER (FT)	202 MANHOLE REMOVED (EACH)	202 CATCH BASIN REMOVED (EACH)	202 CONCRETE SLOPE PROTECTION REMOVED (SY)	202 REMOVAL MISC.: SANITARY LIFT STATION REMOVAL (EACH)	411 STABILIZED CRUSHED AGGREGATE (CY)	452 6" NON-REINFORCED CONCRETE PAVEMENT (SY)	601 ROCK CHANNEL PROTECTION, TYPE B WITH FILTER (CY)	608 4" CONCRETE WALK (SF)	609 CURB, TYPE 6 (FT)	611 6" CONDUIT, TYPE C, 707.45 (FT)	611 8" CONDUIT, TYPE B, 707.45 (FT)	611 8" CONDUIT, TYPE C, 707.45 (FT)	611 12" CONDUIT, TYPE C, 707.45 (FT)	611 15" CONDUIT, TYPE B (FT)	611 15" CONDUIT, TYPE C (FT)	611 15" CONDUIT, TYPE C, 707.45 (FT)	611 18" CONDUIT, TYPE C (FT)	611 24" CONDUIT, TYPE C, AS PER PLAN, 707.70 (FT)	611 CATCH BASIN NO. 3 (EACH)	611 MANHOLE, NO. 1 (EACH)	611 MANHOLE, NO. 3 (EACH)	611 MANHOLE, MISC.: CLEANOUT (EACH)
R-1	21	S.R. 172	220+57.00	220+65.00	LT./RT.				37		1																				
R-2	21	S.R. 172	220+65.00	220+82.00	LT.				16		1																				
R-3	21	S.R. 172	221+04.15	221+22.19	LT.																										
R-4	21	S.R. 172	221+14.00	221+16.00	RT.				8		1																				
R-5	21	S.R. 172	220+97.00	221+25.00	RT.				28	1																					
R-6	21	S.R. 172	221+16.00	221+21.00	LT./RT.				30		1																				
R-7	27	S.R. 172	220+40.50	220+45.50	LT.				34	1																					
R-8	27	S.R. 172	220+47.00		LT.								1																		
R-9	27	S.R. 172	220+47.00	221+38.25	LT.				97																						
R-10	27	S.R. 172	220+47.50	221+88.50	RT.				147																						
C-1	21	S.R. 172	220+50.00	220+81.55	LT.			17										32													
C-2	21	S.R. 172	220+50.00	220+74.41	RT.			10										24													
C-3	21	S.R. 172	220+96.66	221+42.50	RT.			31										46													
C-4	21	S.R. 172	221+03.80	221+40.00	LT.			21										36													
DR-1	21	S.R. 172	221+33.50		RT.	23								8	14																
E-1	21	S.R. 172	260+78.49	261+17.51	RT.											20															
E-2	21	S.R. 172	260+79.90	260+88.92	LT.							19				75															
E-3	21	S.R. 172	261+04.27	261+16.19	RT.											29															
W-1	21	S.R. 172	220+42.00	220+73.53	RT.		75										155.5														
W-2	21	S.R. 172	220+50.00	220+83.23	LT.		87										163.9														
W-3	21	S.R. 172	220+95.00	221+27.50	RT.		73										160.4														
W-4	21	S.R. 172	221+04.68	221+46.82	LT.		127										208.5														
W-5	21	S.R. 172	221+39.50	221+90.00	RT.		209										252.5														
D-1	21	S.R. 172	220+58.00	220+65.00	LT./RT.																	38					1				
D-2	21	S.R. 172	220+65.00	220+78.00	LT.																				13		1				
D-3	21	S.R. 172	220+78.00	220+81.00	LT.																				11					1	
D-4	21	S.R. 172	221+08.00	221+09.00	LT.																		15				1				
D-5	21	S.R. 172	221+14.00	221+16.00	RT.																	9					1				
D-6	21	S.R. 172	221+08.00	221+25.00	LT./RT.																	38								1	
SS-1	27	S.R. 172	220+45.50	220+49.25	LT.																			6				1			
SS-2	27	S.R. 172	220+49.25	221+25.00	LT.																10			8				1			
SS-3	27	S.R. 172	221+25.00	221+38.25	LT.																76					38		1			
SS-4	27	S.R. 172	221+38.25	221+82.48	LT./RT.														6		6	21						1			
SS-5	27	S.R. 172	221+20.50	221+82.48	RT.														39		62										1
SS-6	27	S.R. 172	221+82.48	221+88.48	RT.															69	6							1			
SS-7	27	S.R. 172	220+40.06	221+25.00	LT.																	18									
TOTALS CARRIED TO GENERAL SUMMARY						23	571	79	397	2	4	19	1	8	14	124	941	138	45	69	74	125	85	15	14	24	38	4	5	2	1

CALCULATED MGM
CHECKED TWG

ROADWAY SUBSUMMARY
STA-172-4.20

STA-21-4.46
STA-172-4.20

P:\ODT\04\0009_04-7_STA-21.172-4.46-4.20\95369_STA-21.172-4.46\Design\Roadway\Sheets\95369_GS172.dgn Sheet 8/11/2017 9:35:51 AM CMT008

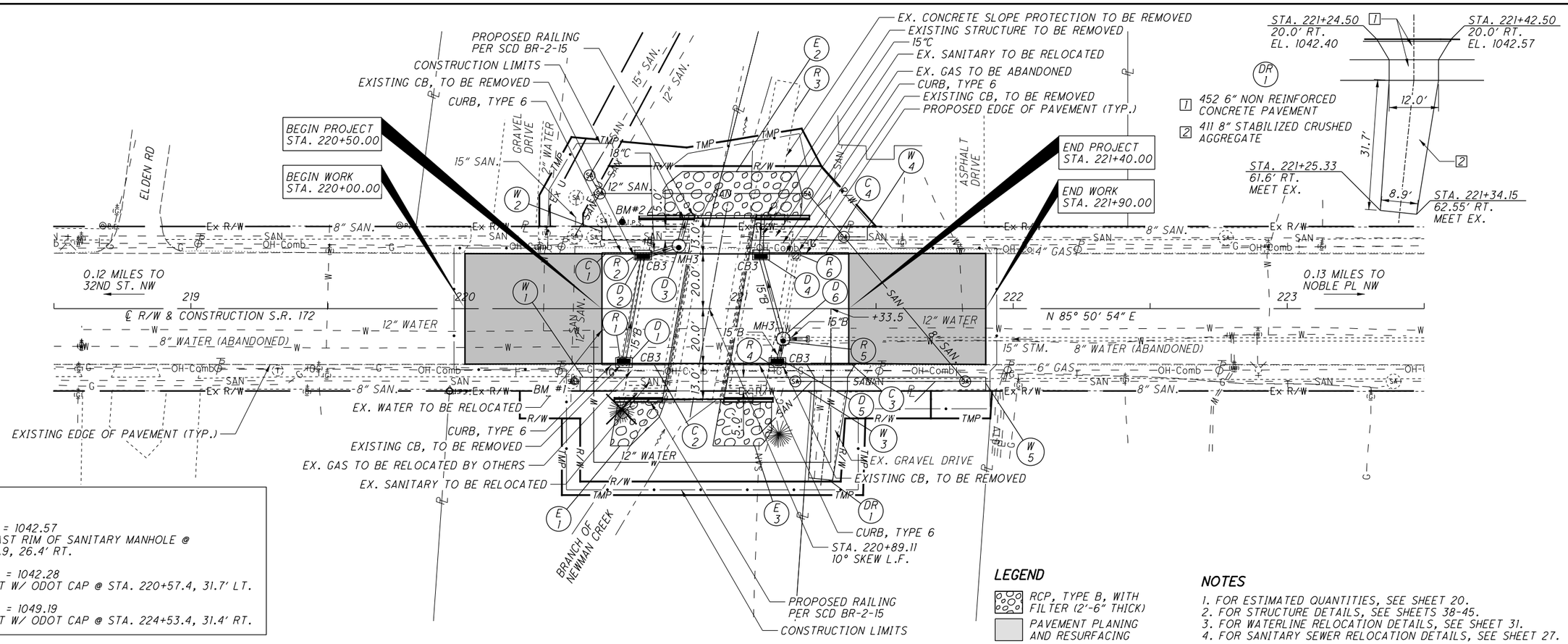

BENCHMARKS:

BM #1: ELEV. = 1042.57
"X" CUT IN EAST RIM OF SANITARY MANHOLE @ STA. 220+39.9, 26.4' RT.

BM #2: ELEV. = 1042.28
#5 REBAR SET W/ ODOT CAP @ STA. 220+57.4, 31.7' LT.

BM #3: ELEV. = 1049.19
#5 REBAR SET W/ ODOT CAP @ STA. 224+53.4, 31.4' RT.

LEGEND

- RCP, TYPE B, WITH FILTER (2'-6" THICK)
- PAVEMENT PLANING AND RESURFACING

NOTES

1. FOR ESTIMATED QUANTITIES, SEE SHEET 20.
2. FOR STRUCTURE DETAILS, SEE SHEETS 38-45.
3. FOR WATERLINE RELOCATION DETAILS, SEE SHEET 31.
4. FOR SANITARY SEWER RELOCATION DETAILS, SEE SHEET 27.

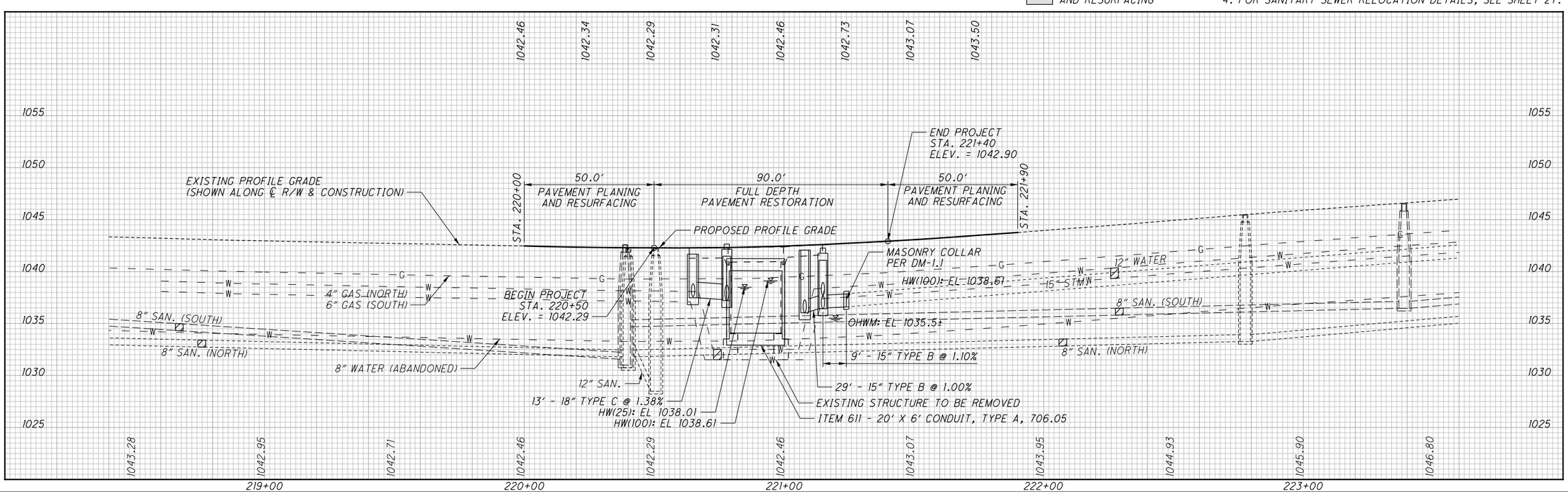

HORIZONTAL SCALE IN FEET 0 10 20 40

CALCULATED MGM
CHECKED TWG

PLAN AND PROFILE
STA-172-4.20

STA-21-4.46
STA-172-4.20

P:\ODT\04\0009_04-7_STA-21.172-4.46_4.20\95369_STA-21.172-4.46\Design\Roadway\Sheets\95369_GP172.dgn Sheet 8/11/2017 9:35:52 AM CMT008

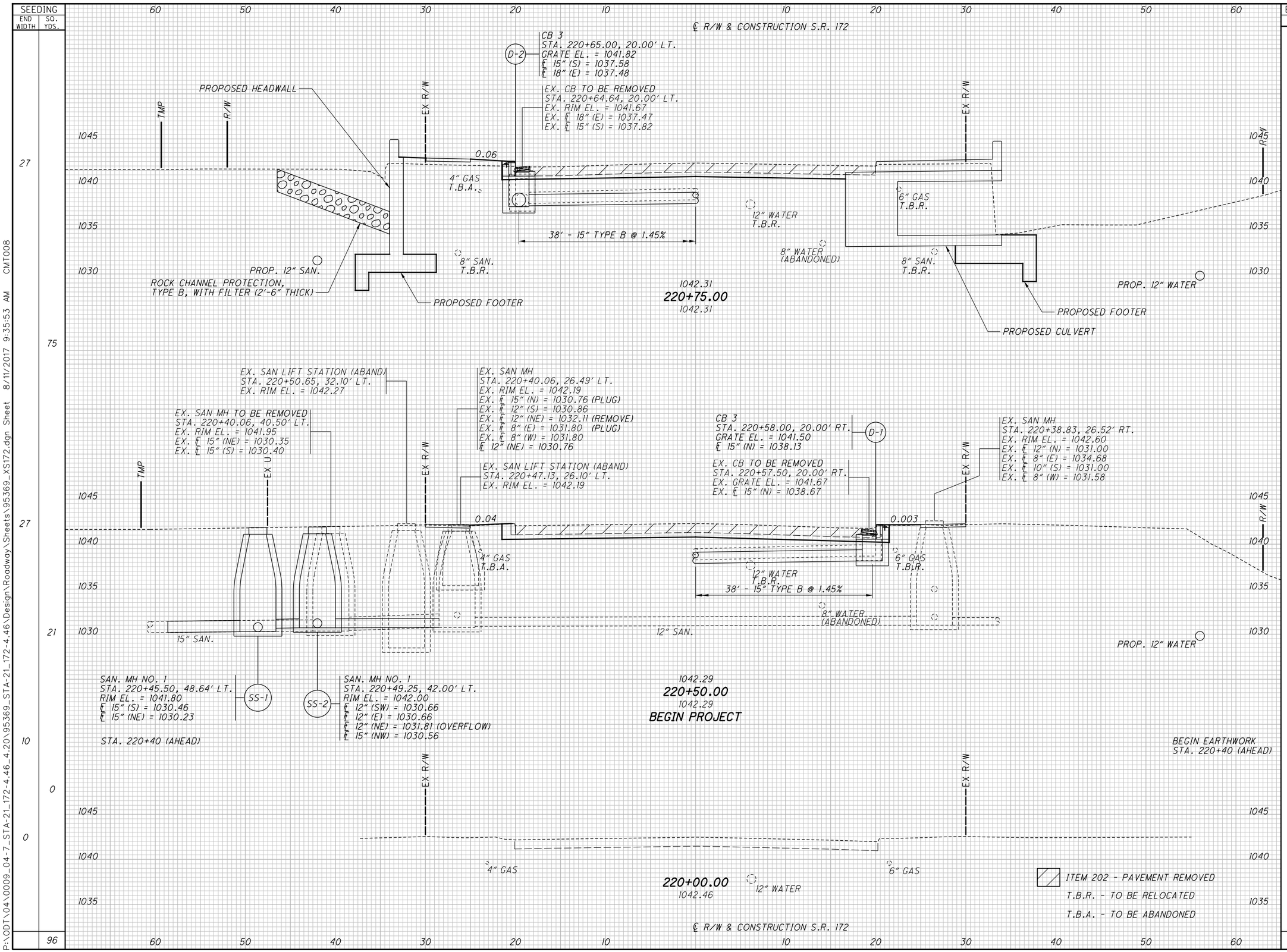

SEEDING END WIDTH	SEEDING SQ. YDS.	END AREA CUT	END AREA FILL	VOLUME CUT	VOLUME FILL
27		50	6		
	75			35	3
27		25	1		
21				5	0
10	0	0	0	0	0
0		0	0		
	96			40	3

CALCULATED MGM
CHECKED TWG

CROSS SECTIONS - STA-172-4.20
STA. 220+00.00 TO STA. 220+75.00

STA-21-4.46
STA-172-4.20

P:\ODT\04\0009_04-7_STA-21_172-4.46_4.20\95369_STA-21_172-4.46\Design\Roadway\Sheets\95369_XS172.dgn Sheet 8/11/2017 9:35:53 AM CMT008

SEEDING END WIDTH	SEEDING SQ. YDS.	END AREA CUT	END AREA FILL	VOLUME CUT	VOLUME FILL
32	3	76	5	1	0
27	57	28	0	16	0
23	11	14	0	5	1
71				22	1

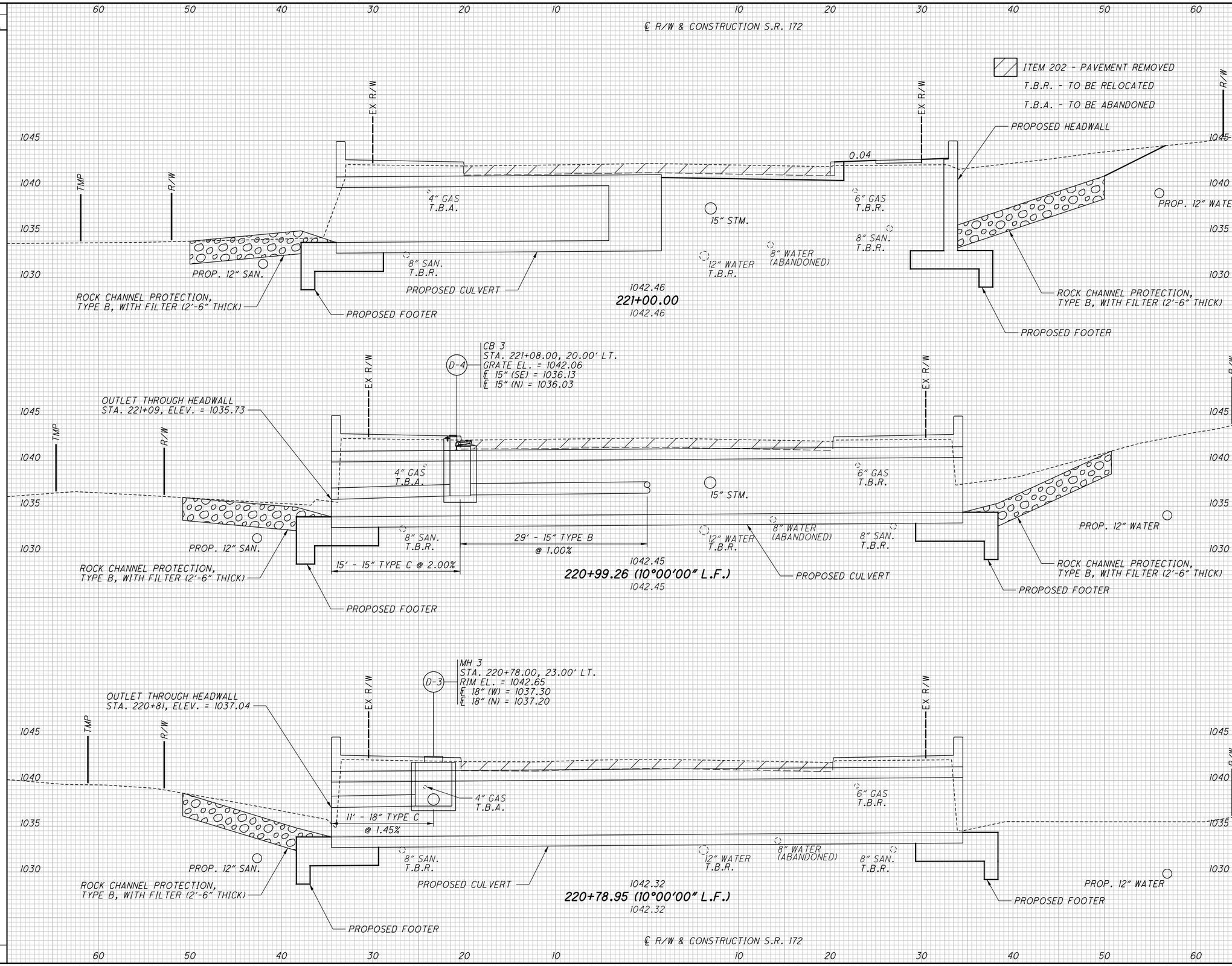

CALCULATED MGM
CHECKED TWG

CROSS SECTIONS - STA-172-4.20
STA. 220+78.95 TO STA. 221+00.00

STA-21-4.46
STA-172-4.20

23
51

P:\ODT\04\0009_04-7_STA-21_172-4.46_4.20\95369_STA-21_172-4.46\Design\Roadway\Sheets\95369_XS172.dgn Sheet 8/11/2017 9:35:53 AM CMT008

SEEDING END WIDTH	SEEDING SQ. YDS.	END AREA CUT	END AREA FILL	VOLUME CUT	VOLUME FILL
25		0	1		
	32			5	1
33		24	4		
	64			13	3
44		22	7		
106				46	5
202				64	9

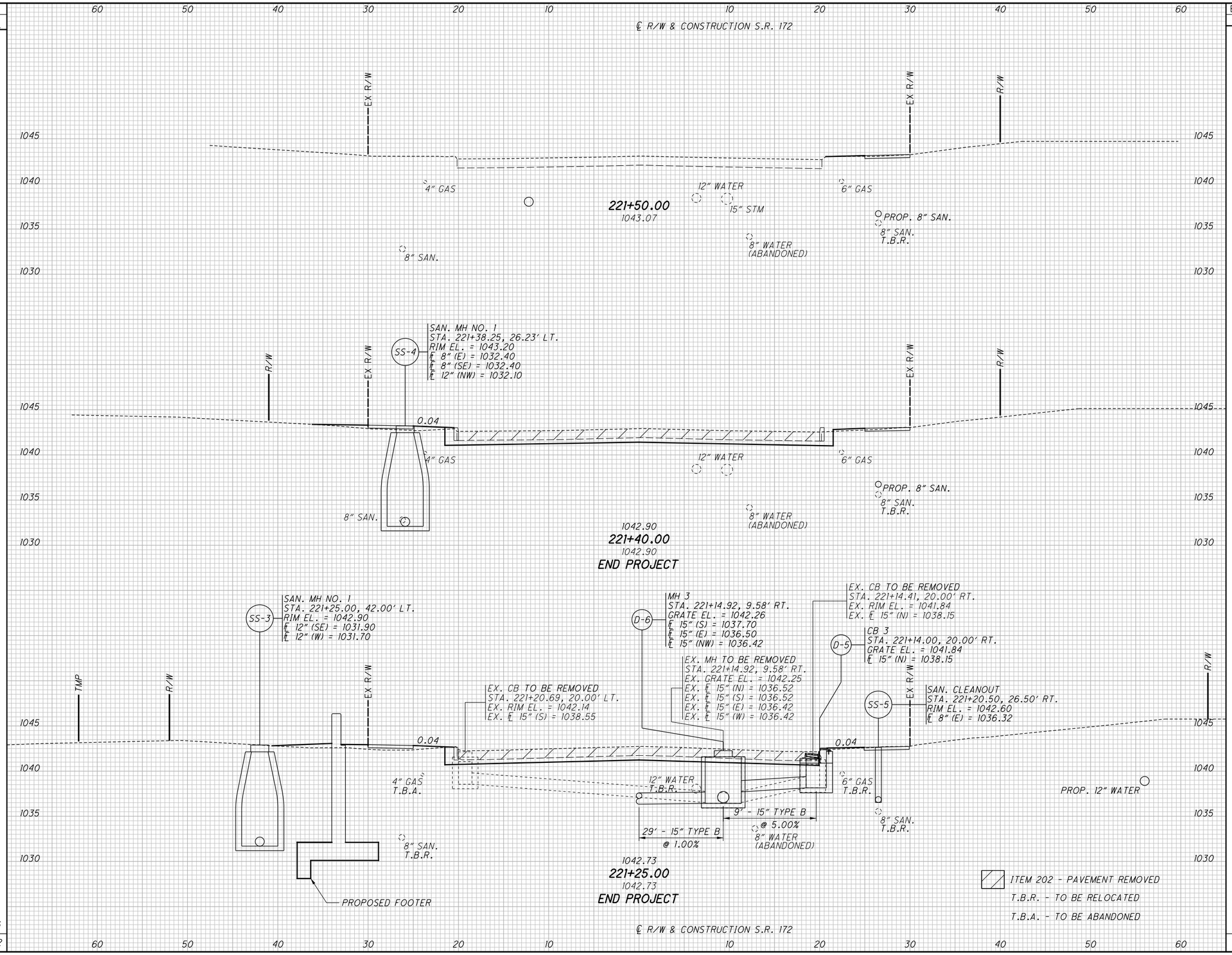

CALCULATED MGM
CHECKED TWG

CROSS SECTIONS - STA-172-4.20
STA. 221+25.00 TO STA. 221+50.00

STA-21-4.46
STA-172-4.20

P:\ODT\04\0009_04-7_STA-21_172-4.46_4.20\95369_STA-21_172-4.46\Design\Roadway\Sheets\95369_XS172.dgn Sheet 8/11/2017 9:35:54 AM CMT008

SEEDING	
END WIDTH	SQ. YDS.
0	
70	

END AREA		VOLUME	
CUT	FILL	CUT	FILL
0	0		
		0	0
		0	0

60 50 40 30 20 10 10 20 30 40 50 60

℄ R/W & CONSTRUCTION S.R. 172

EARTHWORK QUANTITY SUB-SUMMARY

STATION FROM	STATION TO	203 EXCAVATION	203 EMBANKMENT	659 SEEDING AND MULCHING
		CU YD	CU YD	SQ YD
220+00.00	220+75.00	40	3	96
220+78.995	221+00.00	22	1	71
221+25.00	221+50.00	64	9	202
222+00.00	222+00.00	0	0	70
TOTALS TO GENERAL SUMMARY		126	13	439

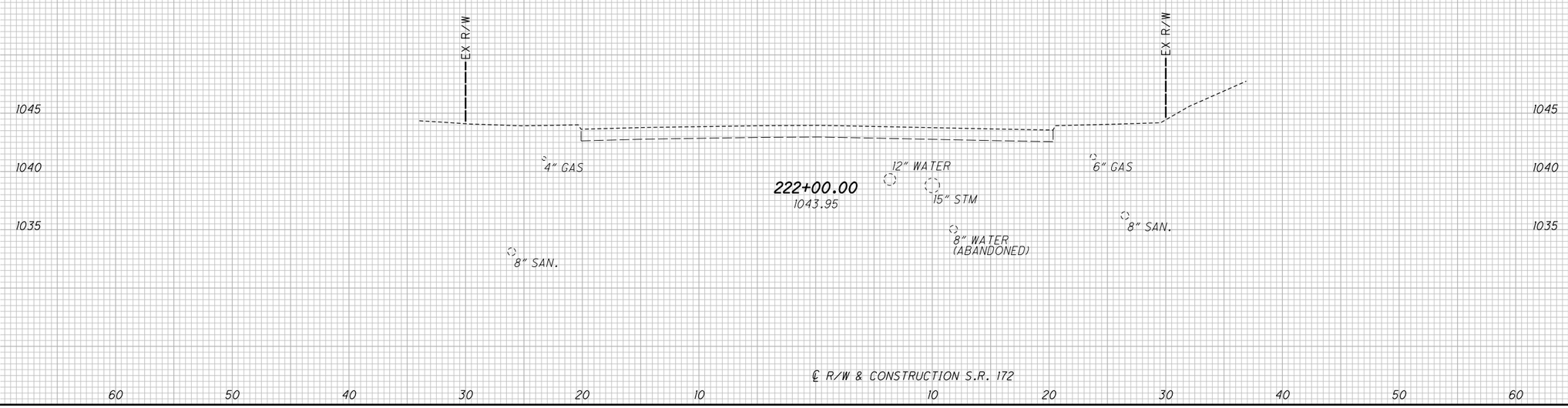

CALCULATED MGM
CHECKED TWG

CROSS SECTIONS - STA-172-4.20
STA. 222+00.00

STA-21-4.46
STA-172-4.20

P:\ODT\04\0009_04-7_STA-21_172-4.46_4.20\95369_STA-21_172-4.46\Design\Roadway\Sheets\95369_XS172.dgn Sheet 8/11/2017 9:35:54 AM CMT008

SANITARY SEWER SPECIFICATIONS

SANITARY SEWER CONSTRUCTION PROPOSED FOR THIS PROJECT SHALL CONFORM TO THE LATEST CITY OF MASSILLON STANDARDS AND CONSTRUCTION AND MATERIALS SPECIFICATIONS, TEN STATE STANDARDS, AND THE LATEST EDITION OF ODOT C&MS, OR MODIFIED BY THE CONTRACT DRAWINGS. IF A CONFLICT ARISES BETWEEN SAID STANDARDS IT SHALL BE AT THE DISCRETION OF THE CITY OF MASSILLON ENGINEER AS TO WHICH STANDARD SHALL GOVERN. THE PROJECT CONTRACT DRAWINGS SHALL GOVERN UNLESS NOTED OTHERWISE.

SANITARY GRAVITY SEWER PIPE AND FITTINGS SHALL BE PVC SDR 35 CONFORMING TO ASTM D-3034 UNLESS OTHERWISE NOTED. PVC COMPOUNDS SHALL CONFORM TO ASTM D-1784. PVC PIPE AND FITTINGS SHALL HAVE BELL AND SPIGOT TYPE JOINTS CONFORMING TO ASTM D-3212 AND GASKETS CONFORMING TO ASTM F-477.

BACKFILL IN SEWER TRENCHES SHALL CONFORM TO ODOT ITEM 611.06 AND PLACED IN LAYERS SUFFICIENT TO MEET THE COMPACTION REQUIREMENT OF 100% OF MAXIMUM LABORATORY DRY DENSITY PER ASTM D-698 AND THOROUGHLY COMPACTED WITH MACHINE MOUNDED COMPACTION EQUIPMENT. THE PLACING OF BACKFILL MATERIAL SHALL BE CONTINUED UNTIL THE TRENCH IS ENTIRELY FILLED AND COMPACTED WITH THE APPROVED GRANULAR MATERIAL TO THE GRADE CALLED FOR ON THE CONTRACT DRAWINGS. EXCAVATED MATERIAL CONFORMING TO ODOT ITEM 203 SHALL BE USED FOR BACKFILLING EXISTING STRUCTURES (AFTER REMOVAL) ONLY. CRUSHED GRAVEL CONFORMING TO GRADATION REQUIREMENTS OF ODOT ITEM 304 OR APPROVED EQUAL AS SHOWN IN ODOT TABLE 703-1 SHALL BE USED FOR BACKFILLING ALL SEWER TRENCH AREAS SHOWN ON THE PLANS AND AS DIRECTED BY THE CITY OF MASSILLON ENGINEER. FLOODING, JETTING, OR PUDDLING OF BACKFILL MATERIAL WILL NOT BE PERMITTED UNLESS APPROVED BY THE CITY OF MASSILLON ENGINEER. COMPACTION TESTING OF THE BACKFILL BY A GEOTECHNICAL ENGINEER MAY BE REQUIRED BY THE OWNER AT THE EXPENSE OF THE CONTRACTOR.

SANITARY SEWERS SHALL BE AIR TESTED FOR LEAKAGE AND MANDREL TESTED FOR DEFLECTION. THE MAXIMUM ALLOWABLE PIPE DEFLECTION SHALL BE 5%.

PRIOR TO FINAL PAYMENT FOR AND ACCEPTANCE OF SANITARY SEWER INSTALLATION THE RESULTS OF THE AIR PRESSURE TESTS, TELEVISION TESTS AND MANDREL TESTS SHALL BE FORWARDED TO THE CITY OF MASSILLON ENGINEER.

REVIEW OF SANITARY AND DRAINAGE FACILITIES

AN INSPECTION OF ALL EXISTING SEWERS WHICH ARE TO REMAIN IN SERVICE AND WHICH MAY BE AFFECTED BY THE WORK SHALL BE COMPLETED BEFORE AND AFTER WORK HAS COMMENCED. FINAL ACCEPTANCE BY THE CITY OF MASSILLON WILL NOT OCCUR UNTIL AFTER SAID INSPECTION. THE CONDITION OF THE EXISTING CONDUITS AND THEIR APPURTENANCES SHALL BE DETERMINED FROM FIELD OBSERVATIONS. RECORDS OF THE OBSERVATIONS SHALL BE PROVIDED IN WRITING BY THE CONRACTOR TO THE CITY OF MASSILLON.

ALL NEW CONDUITS, INLETS, CATCH BASINS, AND MANHOLES CONSTRUCTED AS A PART OF THE PROJECT SHALL BE FREE OF ALL FOREIGN MATTER AND IN A CLEAN CONDITION BEFORE THE PROJECT WILL BE ACCEPTED BY THE CITY OF MASSILLON.

ALL EXISTING SEWERS INSPECTED INITIALLY BY THE ABOVE MENTIONED PARTIES SHALL BE MAINTAINED AND LEFT IN A CONDITION REASONABLY COMPARABLE TO THAT DETERMINED BY THE ORIGINAL INSPECTION. ANY CHANGE IN THE CONDITION RESULTING FROM THE CONTRACTOR'S OPERATIONS SHALL BE CORRECTED BY THE CONTRACTOR TO THE SATISFACTION OF THE ENGINEER.

PAVEMENT FOR ALL OPERATIONS DESCRIBED ABOVE SHALL BE INCLUDED IN THE CONTRACT PRICE FOR THE PERTINENT 611 CONDUIT ITEMS.

DEFLECTION TESTING

MAXIMUM ALLOWABLE PIPE DEFLECTION (REDUCTION IN VERTICAL INSIDE DIAMETER) SHALL BE 5%. DEFLECTION TESTS OF PIPE SHALL BE PERFORMED NOT SOONER THAN 30 DAYS AFTER THE BACKFILL HAS BEEN PROPERLY PLACED AND BEFORE FINAL ACCEPTANCE. LOCATIONS WITH EXCESS DEFLECTIONS SHALL BE EXCAVATED AND REPAIRED BY RE-BEDDING OR REPLACEMENT OF THE PIPE AT THE CONTRACTOR'S EXPENSE. DEVICES FOR TESTING INCLUDE A DEFLECOMETER METER, OR APPROPRIATELY SIZED (60, NO-GO) MANDREL OR SEWER BALL. THE DEFLECTION TESTING MUST BE CONCLUDED WITHOUT MECHANICAL PULLING DEVICES. FOR THE PURPOSE OF DEFLECTION MEASUREMENTS, THE BASE INSIDE PIPE DIAMETERS WITHOUT DEFLECTION ARE PROVIDED IN TABLE A. THE MAXIMUM ALLOWABLE DEFLECTION SHALL BE APPLIED TO THE BASE INSIDE DIAMETER IN DETERMINING THE MINIMUM PERMISSIBLE DIAMETER. IT MUST BE EMPHASIZED TO ENSURE ACCURATE TESTING, THE LINES MUST BE THOROUGHLY CLEANED.

TABLE A
INSIDE DIAMETERS FOR DEFLECTION MEASUREMENTS
OF ASTM D 3034 SDR 35 / SDR 21 PVC SEWER PIPE

SIZE	SDR	AVG. O.D.	BASE I.D.	DEFLECTION MANDREL
6"	35	6.275	5.742	5.54
8"	35	8.400	7.665	7.28
10"	35	10.500	9.563	9.08
12"	35	12.500	11.361	10.79

TELEVISION TESTING

ALL SANITARY SEWERS, 8-INCH DIAMETER AND LARGER, MUST PASS AN INTERNAL TELEVISION INSPECTION, THE CONTRACTOR SHALL PROVIDE A COMPLETE INTERNAL INSPECTION DVD TO THE CITY OF MASSILLON ENGINEERING DEPARTMENT. THE RECORDING PROCEDURE SHALL BE IN ACCORDANCE WITH CITY OF MASSILLON ENGINEERING DEPARTMENT STANDARDS.

LEAKAGE TESTS

LEAKAGE TESTS SHALL BE PERFORMED WHICH MAY INCLUDE APPROPRIATE WATER OR LOW PRESSURE AIR TESTING. THE METHODS SELECTED SHOULD TAKE INTO CONSIDERATION THE RANGE IN GROUNDWATER ELEVATIONS DURING THE TEST AND ANTICIPATED DURING THE DESIGN LIFE OF THE SEWER COMPLETED AND ACCEPTED.

WATER (HYDROSTATIC) TEST

THE LEAKAGE EXFILTRATION OR INFILTRATION SHALL NOT EXCEED 100 GALLONS PER INCH OF PIPE DIAMETER PER MILE PER DAY [9L/(MM OF PIPE DIAMETER KM D)] FOR ANY SECTION OF THE SYSTEM. AN EXFILTRATION OR INFILTRATION TEST SHALL BE PERFORMED WITH A MINIMUM POSITIVE HEAD OF 2 FEET (0.6 M).

ITEM 611 - 24" CONDUIT, TYPE C, 707.70, AS PER PLAN

THIS WORK SHALL CONSIST PROVIDING A STEEL PIPE ENCASEMENT OF THE SANITARY SEWER LINE. THE WORK ALSO INCUDES FILLING THE VOID BETWEEN THE STEEL PIPE AND THE SANITARY SEWER LINE WITH CONCRETE.

THIS ITEM SHALL BE PAID FOR AT THE UNIT PRICE BID FOOT FOR ITEM 611 - 24" CONDUIT, TYPE C, 707.70, AS PER PLAN. THIS PRICE SHALL INCLUDE THE COST FOR MATERIAL, EQUIPMENT, LABOR, AND ALL INCIDENTALS REQUIRED TO COMPLETE THE WORK.

CLEAN WATER STATEMENT

ROOF DRAINS, FOUNDATION DRAINS, AND OTHER CLEAN WATER CONNECTIONS TO THE SANITARY SEWER ARE PROHIBITED.

COMMENCING, AFTER THE FINAL INVOICE IS SUBMITTED THE SITE SHALL BE VIDEOED AGAIN BY THE CONTRACTOR. ANY DISCREPANCIES WILL BE RESOLVED PRIOR TO FINAL PAYMENT. AS BUILT DRAWINGS SHALL BE CREATED BY THE CONTRACTOR AND SUBMITTED TO THE CITY OF MASSILLON ENGINEER IN A CLEAR AND LEGIBLE MANNER PRIOR TO FINAL INVOICE.

COST OF THIS WORK SHALL BE INCLUDED IN ITEM 623 CONSTRUCTION STAKING.

RELATION TO WATER MAINS

SEWERS SHALL BE LAID AT LEAST 10 FEET HORIZONTALLY FROM AN EXISTING OR PROPOSED WATER MAIN. THE DISTANCE SHALL BE MEASURED EDGE TO EDGE.

SEWERS CROSSING WATER MAINS SHALL BE LAID TO PROVIDE A MINIMUM VERTICAL DISTANCE OF 18 INCHES BETWEEN THE OUTSIDE OF THE WATER MAIN AND THE OUTSIDE OF THE SEWER.

ITEM 611 - MANHOLE, MISC.: CLEANOUT

THIS WORK SHALL CONSIST OF CONSTRUCTING A SANITARY SEWER CLEANOUT AS DETAILED BELOW.

THIS ITEM SHALL BE PAID FOR AT THE UNIT PRICE BID EACH FOR ITEM 611 - MANHOLE, MISC.: CLEANOUT. THIS PRICE SHALL INCLUDE THE COST FOR MATERIAL, EQUIPMENT, LABOR, AND ALL INCIDENTALS REQUIRED TO COMPLETE THE WORK.

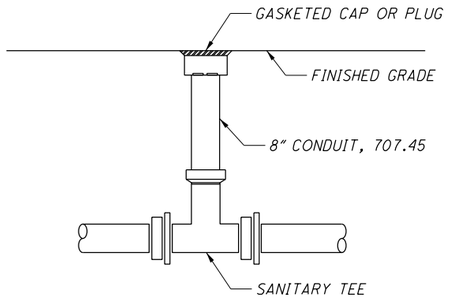

TYPICAL SANITARY SEWER CLEANOUT

CALCULATED TWG
CHECKED MDW

SANITARY SEWER GENERAL NOTES

STA-21-4.46
STA-172-4.20

P:\ODT\04\0009.04-7_STA-21.172-4.46_4.20\95369_STA-21.172-4.46\Design\Utilities\Sheets\95369_UN001.dgn Sheet 8/11/2017 9:35:55 AM CMT008

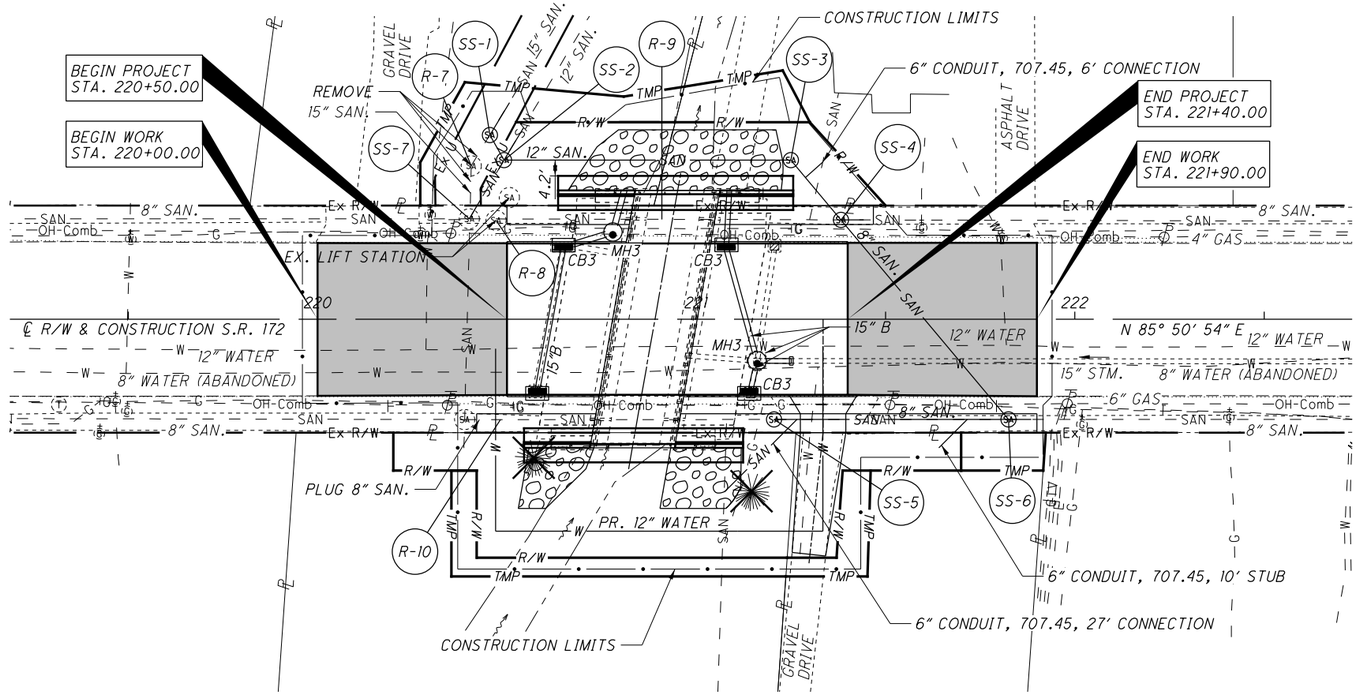

LEGEND

- RCP, TYPE B, 2'-6" THICK WITH FILTER.
- PAVEMENT PLANING AND RESURFACING

NOTES

1. FOR ESTIMATED QUANTITIES, SEE SHEET 20.
2. FOR STRUCTURE DETAILS, SEE SHEETS 38-45.
3. FOR WATERLINE RELOCATION DETAILS, SEE SHEET 31.

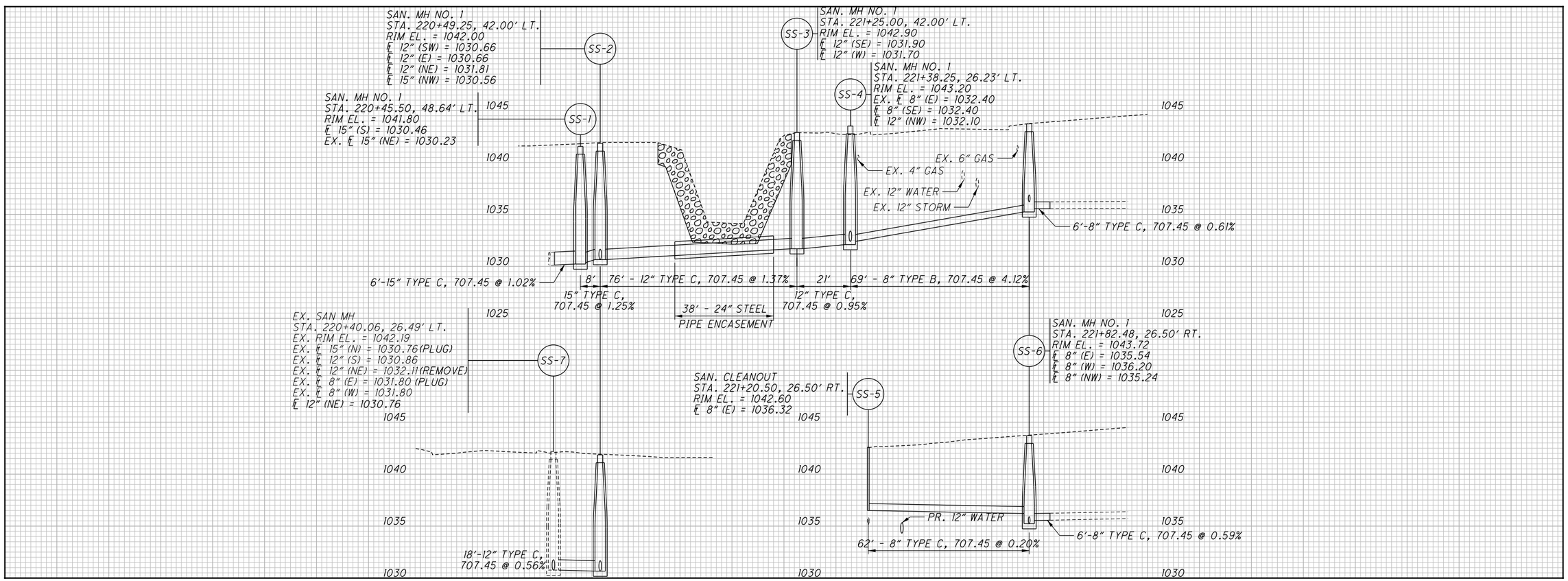

HORIZONTAL SCALE IN FEET 0 10 20 40

CALCULATED TWG
CHECKED MDW

SANITARY SEWER PLAN AND PROFILE
STA-172-4.20

STA-21-4.46
STA-172-4.20

P:\ODOT\04\0009_04-7_STA-21.172-4.46.4.20\95369_STA-21.172-4.46\Design\Utilities\Sheets\95369_UP001.dgn Sheet 8/11/2017 9:35:56 AM CMT008

GENERAL WATERLINE INSTALLATION NOTES

1. CONTRACTOR TO PROVIDE LINE AND GRADE STAKES AT 100' INTERVALS FOR WATER MAIN AND FOR EACH FITTING AND APPURTENANCE. A COPY OF CUT SHEET SHALL BE PROVIDED TO FIELD INSPECTOR PRIOR TO INSTALLATION.

2. WATER WORK SHALL NOT BEGIN UNTIL AREAS OF WATERLINE CONSTRUCTION ARE ROUGH GRADED (WITHIN 1 FT. OF FINISHED GRADE AND FILL AREAS ARE COMPLETED AND COMPACTED.)

3. A MINIMUM OF 5 FEET HORIZONTAL SEPARATION SHALL BE MAINTAINED BETWEEN UTILITY CONDUIT CROSSOVERS AND WATERLINE APPURTENANCES, I.E. HYDRANTS, VALVES, TEES, ETC.

4. WATERLINE MATERIAL AND INSTALLATION PROCEDURES SHALL BE IN ACCORDANCE WITH AQUA OHIO SPECIFICATIONS. CLASS 52 DUCTILE IRON WATER MAIN POLYWRAPPED, FITTINGS CLASS 53 CEMENT LINED POLYWRAPPED AND HDPE TUBING WITH COMPRESSION FITTINGS FOR DOMESTIC SERVICES OR 2" HDPE SDR 9 POLYETHYLENE 3408 PIPE AROUND CUL-DE-SAC. IF POLYETHYLENE IS USED, A 12 GAUGE WIRE AND METALLIC CAUTION TAPE MUST BE USED.

5. ALL PIPE AND APPURTENANCES INSTALLED ON A DEPRESSURIZED WATER MAIN ARE TO BE WIPED CLEAN AND ALL INTERIOR SURFACES SATURATED WITH A MINIMUM 1% CHLORINE SOLUTION.

6. ALL MECHANICAL JOINTS ARE TO BE RESTRAINED USING MEGALUG OR "FORD" EQUIVALENT. FIRE LINE RISERS TO INCLUDE (2) 5/8" ALL THREAD RODS EXTENDING FROM LOWER BEND TO RISER FLANGE.

7. A RESTRAINT GASKET (FIELD-LOK OR APPROVED EQUAL) SHALL BE UTILIZED ON PUSH-ON JOINTS AS REQUIRED BY AQUA OHIO STANDARDS.

8. ALL DUCTILE IRON PIPE AND FITTINGS TO BE POLYWRAPPED AND TAPED AS PER DUCTILE IRON PIPE RESEARCH ASSOCIATION RECOMMENDATIONS.

9. DUCTILE IRON IN CASING SHALL BE CLASS 52, POLYWRAPPED AND ALL PUSH-ON JOINTS SHALL BE EQUIPPED WITH RESTRAINT GASKETS (FIELD-LOK OR APPROVED EQUAL) AND STAINLESS STEEL CASING SPACERS ARE REQUIRED IN STARK.

10. ALL THRUST BLOCKING WILL BE SOLID CONCRETE BLOCKS WITH OAK WEDGES OR POURED CONCRETE, PER AQUA STANDARDS DRAWING.

11. ALL MAIN LINE VALVES ARE OPEN RIGHT AND ALL MAIN LINE VALVES ARE TO BE PLACED ON A MINIMUM OF ONE 4" SOLID CONCRETE BLOCK. ALL VALVES TO HAVE #57 LIMESTONE UP TO OPERATING NUT OF VALVE.

12. ALL FIRE HYDRANTS TO HAVE A MINIMUM OF ½ CUBIC YARD OF #57 LIMESTONE 6" ABOVE DRAIN HOLE OR EQUIVALENT SIZE BANK RUN GRAVEL. PLASTIC SHALL BE PLACED OVER STONE PRIOR TO BACKFILL. ALL HYDRANTS TO BE TURNED WITH 4-1/2" NOZZLE FACING STREET AND MEETING FIRE DEPARTMENT SPECIFICATIONS.

13. ALL VALVE BOX COVERS ARE TO BE PAINTED BLUE. CONTRACTOR IS RESPONSIBLE FOR ADJUSTMENTS TO VALVE BOXES, CURB BOXES, AND FIRE HYDRANTS WITH RESPECT TO FINAL GRADING. ALL VALVES BOXES IN NEW OR PROPOSED PAVEMENT SHALL BE SCREW TYPE.

14. WATERLINE WILL NOT BE ACCEPTED OR PLACED IN SERVICE UNTIL CONTRACTOR CONDUCTS AND OBTAINS SATISFACTORY RESULTS OF PRESSURE AND CHLORINE TESTS. BACTERIA TEST WILL THEN BE CONDUCTED BY AQUA OHIO. ALL VALVES, HYDRANTS, AND CURB BOXES TO BE TO PROPER GRADE PRIOR TO ACCEPTANCE.

15. THE CONTRACTOR SHALL TAKE PRECAUTIONARY MEASURES TO ENSURE SAFETY OF THE PUBLIC ON AND SURROUNDING THE SITE DURING CONSTRUCTION.

16. THE LOCATION OF EXISTING UTILITIES AND STRUCTURES, BOTH ABOVE GROUND AND UNDERGROUND, ARE SHOWN ON THE PLANS FROM DATA AVAILABLE AT THE TIME OF THE SURVEY AND ARE NOT NECESSARILY COMPLETE AND/OR CORRECT. THE EXACT LOCATION AND PROTECTION OF EXISTING UTILITIES AND STRUCTURES IS THE RESPONSIBILITY OF THE CONTRACTOR. DURING CONSTRUCTION, THE CONTRACTOR SHALL USE DUE DILIGENCE IN PROTECTING FROM DAMAGE ALL EXISTING UTILITIES AND STRUCTURES WHETHER SHOWN ON PLANS OR NOT. IF DAMAGE IS CAUSED, THE CONTRACTOR SHALL BE RESPONSIBLE FOR REPAIR OR RESTORATION OF SAME IN ACCORDANCE WITH THE DIRECTIONS OF THE OWNER. THE CONTRACTOR SHALL CONTACT OHIO UTILITIES PROTECTION SERVICE, AT 1-800-362-2764, TWO WORKING DAYS PRIOR TO START OF CONSTRUCTION AS REQUIRED BY OHIO LAW.

17. THE WATERLINE SHALL BE INSTALLED AT 4' -0" OF COVER FROM PROPOSED GRADE TO TOP OF THE WATERLINE. THIS 4' SHALL BE MAINTAINED UNLESS OTHERWISE NOTED.

18. A MINIMUM 10' -0" HORIZONTAL SEPARATION MUST BE MAINTAINED BETWEEN ALL STORM AND SANITARY SEWERS AND WATERLINE, OUT TO OUT.

19. A MINIMUM 18" VERTICAL SEPARATION MUST BE MAINTAINED BETWEEN ALL STORM AND SANITARY SEWERS AND WATERLINE, OUT TO OUT.

20. THE CONTRACTOR MAY DEFLECT THE WATERLINE AS PER MANUFACTURER'S SPECS WITH PERMISSION FROM AQUA AS NEEDED TO MAINTAIN MINIMUM HORIZONTAL AND VERTICAL SEPARATION DISTANCES.

21. WATER SERVICE LINE CONNECTIONS ARE NOT TO BE INSTALLED UNTIL PRESSURE TEST AND BACTERIA TESTS HAVE BEEN APPROVED.

22. THE NORMAL WORKING PRESSURE IN WATER LINES SHALL NOT BE LESS THAN 35 PSI.

NOTE: THIS LIST DOES NOT SUPERCEDE CONTRACT SPECIFICATIONS AND IS INTENDED ONLY AS A GUIDELINE TO INSTALLING WATERLINES WITHIN THE AQUA OHIO SERVICE AREA. ANY QUESTIONS SPECIFIC TO YOUR PROJECT, SHOULD BE DISCUSSED WITH THE ONSITE INSPECTOR.

CALCULATED TWG
CHECKED MDW

WATERLINE GENERAL NOTES

STA-21-4.46
STA-172-4.20

P:\ODT\04\0009_04-7_STA-21.172-4.46_4.20\95369_STA-21.172-4.46\Design\Utilities\Sheets\95369_UN002.dgn Sheet 8/11/2017 9:35:56 AM CMT008

METER PIT PLACEMENT

R/W

EX. SERVICE LINE

1. PLACE PIT NEAREST INTERSECTING AXIS OF R/W AND EX. SERVICE LINE.
2. ANY VARIATION MUST BE APPROVED BY AQUA PRIOR TO INSTALLATION.

ITEM	DESCRIPTION	REQ'D
A	3/4" LOCKWING ANGLE STOP - H14278	2
B	1" x 3/4" BELL REDUCER	2
C	18" SHELL SUB-ASSEMBLY	1
D	PVC STABILIZING BRACKET	2
E	1" BRASS RISER	2
G	HAND WHEEL	1
H	1" JAM NUT	4
J	3/4" CLOSED NIPPLE	2
K	IRON METER BAR - H5020	1
L	TOUCH READ LID - 780113	1
M	FRAME - 700098-1	1
N	TOUCH READ PLUG - 311952	1

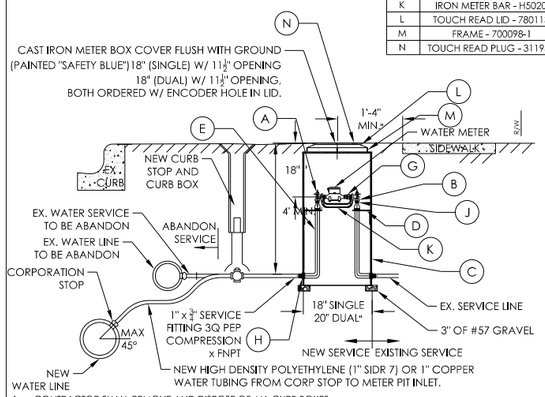

1. CONTRACTOR SHALL REMOVE AND DISPOSE OF ALL CURB BOXES .
2. ANY WATER METER SYSTEMS (INCLUDING LIDS) DAMAGED BY THE CONTRACTOR SHALL BE REPLACED BY THE CONTRACTOR AT NO ADDITIONAL COST TO THE OWNER.
3. NEW METER BOXES TO BE LOCATED IN GRASSY AREA WITH THE CENTER OF THE METER PIT A MINIMUM OF 1'-0" OUTSIDE OF SIDEWALKS, PAVED AREAS AND DRIVEWAYS. METER BOXES MUST BE LOCATED INSIDE OF THE EXISTING RIGHT-OF-WAY AND SET VERTICALLY AT FINAL GRADE.
4. CUSTOMER SHALL BE NOTIFIED BY CONTRACTOR OF TEMPORARY DISCONNECTION AT LEAST 72 HOURS BEFORE DISCONNECTION CAN BE MADE.
5. UNDER NO CIRCUMSTANCES ARE EXISTING METER PITS TO BE REUSED UNLESS OTHERWISE APPROVED BY AQUA.
6. NO MODIFICATIONS SHALL BE MADE TO THE METER PIT WITHOUT PRIOR APPROVAL ***IN WRITING*** BY AQUA.

TYPICAL WATER SERVICE TAP

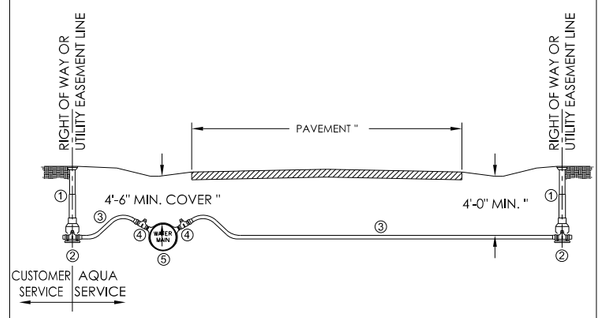

FITTINGS AND TYPE OF MATERIALS REQUIRED BY AQUA OHIO, INC.

1. CURB BOX
2. 1" BRASS CURB STOP
3. SERVICE LINE
4. 1" BRASS CORPORATION STOP 4
5. MAXIMUM DIRECT TAP SHALL BE 1" FOR 8" AND 12" DIA. D.I.P. AND 2" FOR 16" DIA. D.I.P. BRASS SERVICE SADDLE WITH STAINLESS STEEL STRAP TO BE USED OTHERWISE

*** RESIDENTS TO BE NOTIFIED BEFORE SHUT OFF**

AQUA OHIO, INC. TYPICAL SERVICE LINE INSTALLATION

- FIELD-LOK GASKETS OR OTHER APPROVED PIPE RESTRAINT SYSTEMS WILL BE USED TO RESTRAIN PIPE, OR WITH PRIOR APPROVAL BY AQUA FOR THE FOLLOWING SITUATIONS:
  1. FOR VERTICAL BENDS IN LIEU OF DEAD-MAN CONCRETE RESTRAINT
  2. FOR VERTICAL AND HORIZONTAL BENDS INSTALLED IN POOR SOIL CONDITIONS
  3. FOR HYDRANTS OR BENDS WITH SLOPING GROUND BEHIND THE POINT OF THRUST

NOTE: MEG-A-LUGS OR APPROVED EQUAL SHALL BE USED TO RESTRAIN FITTINGS AND VALVES

- THRUST BLOCKS WILL NORMALLY BE USED FOR ALL HORIZONTAL BENDS. THE CONTRACTOR WILL GET WRITTEN PRIOR APPROVAL FROM AQUA TO SUBSTITUTE A RESTRAINT SYSTEM IN LIEU OF THRUST BLOCKING FOR HORIZONTAL BENDS.
- CONTRACTOR WILL SUPPLY ALL FIELD-LOK GASKETS

LINEAR FEET OF MECHANICAL PIPE RESTRAINT REQUIRED (EITHER SIDE OF FITTING)

PIPE DIA. (IN.)	DEAD END	90°	45°	22.5°	11.25°	VERT. UP	VERT. DOWN	TEE BRANCH
4	36	16	8	0	0	4	16	18
6	60	28	13	0	0	10	24	35
8	108	54	18	0	0	18	36	90
12	162	90	36	18	0	36	72	144
16	214	118	49	23	12	12	21	200
24	304	165	68	33	16	16	30	289

CONSTRUCTION CRITERIA:

1. FOR WORKING AND/OR TEST PRESSURES< 150 PSI.
2. TYPE 2 TRENCH WITH MINIMUM OF 4.0 FT. OF COVER
3. POLYWRAPPED PIPE
4. 18 FT. PIPE LENGTHS
5. FITTINGS RESTRAINED WITH MEG-A-LUGS OR APPROVED EQUAL

NOTE: IF FIELD CONDITIONS DO NOT CONFORM TO THE NOTED CONSTRUCTION CRITERIA, THE CONTRACTOR SHALL GET WRITTEN APPROVAL FROM AQUA FOR THE NUMBER OF RESTRAINED JOINTS.

THRUST RESTRAINT WITH FIELD-LOK GASKETS

~PIPE CROSSING DATA SHEET~

PIPE DATA	CARRIER PIPE	CASING PIPE
MATERIAL	DUCTILE IRON	STEEL
PROCESS OF MANUFACTURE	SPIN CAST	ELECTRIC
WELD SPECIFICATION	ANSI.A21.51	ASTM A53
GRADE OF CLASS	SEE SPEC	GRADE B TEST
PRESSURE	SEE SPEC	35,000 PSI, YIELD
TYPE OF JOINT	PUSH ON FIELD LOK RUBBER GASKET	WELDED
TYPE OF COATING	ASPHALTIC PRIMER	NONE
CATHODIC PROTECTION	NONE	NONE
SEAL AT END OF CASING	N/A	MOLDED SYN. RUBBER END SEAL
METHOD OF INSTALLATION	PUSH ON SKIDS	JACK AND BORE

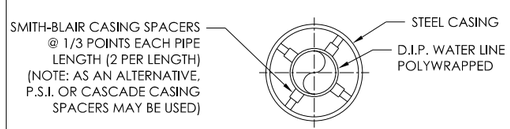

FILL CASING PIPE WITH SAND AFTER CARRIER PIPE IS IN PLACE. ENDS TO BE CLOSED OFF SUFFICIENTLY TO RETAIN THE SAND. FIELD-LOK GASKETS TO BE USED AT ALL PIPE JOINTS WITHIN CASING PIPE.

CASING PIPE DETAIL

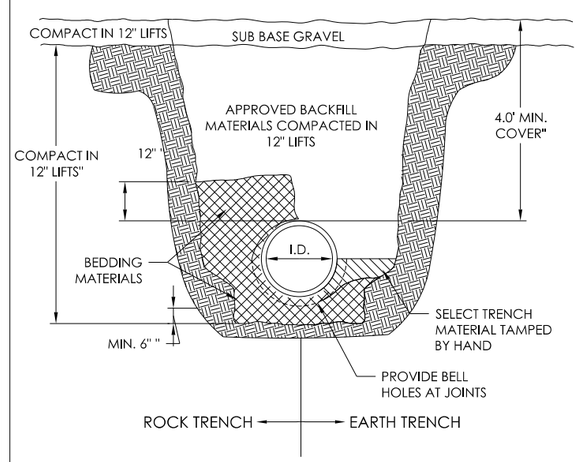

TYPICAL TRENCH DETAIL OUTSIDE OF PAVEMENT

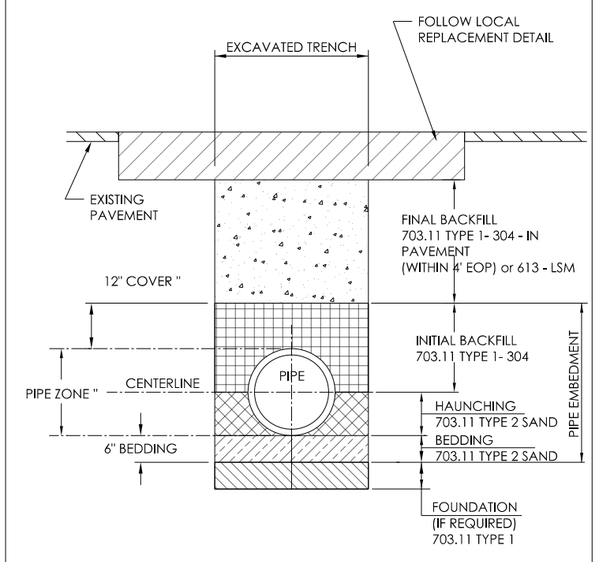

TYPICAL TRENCH DETAIL INSIDE OF PAVEMENT

CALCULATED TWG
CHECKED MDW

WATERLINE DETAILS

STA-21-4.46
STA-172-4.20

P:\ODT\04\0009_04-7_STA-21.172-4.46.4.20\95369_STA-21.172-4.46\Design\Utilities\Sheets\95369_UN003.dgn Sheet 8/11/2017 9:35:57 AM CMT008

- FIELD-LOK GASKETS OR OTHER APPROVED PIPE RESTRAINT SYSTEMS WILL BE USED TO RESTRAIN PIPE, OR WITH PRIOR APPROVAL BY AQUA FOR THE FOLLOWING SITUATIONS:
  1. FOR VERTICAL BENDS IN LIEU OF DEAD-MAN CONCRETE RESTRAINT
  2. FOR VERTICAL AND HORIZONTAL BENDS INSTALLED IN POOR SOIL CONDITIONS
  3. FOR HYDRANTS OR BENDS WITH SLOPING GROUND BEHIND THE POINT OF THRUST

NOTE: MEG-A-LUGS OR APPROVED EQUAL SHALL BE USED TO RESTRAIN FITTINGS AND VALVES

- THRUST BLOCKS WILL NORMALLY BE USED FOR ALL HORIZONTAL BENDS. THE CONTRACTOR WILL GET WRITTEN PRIOR APPROVAL FROM AQUA TO SUBSTITUTE A RESTRAINT SYSTEM IN LIEU OF THRUST BLOCKING FOR HORIZONTAL BENDS.

- CONTRACTOR WILL SUPPLY ALL FIELD-LOK GASKETS

LINEAR FEET OF MECHANICAL PIPE RESTRAINT REQUIRED (EITHER SIDE OF FITTING)

PIPE DIA. (IN.)	DEAD END	90°	45°	22.5°	11.25°	VERT. UP	VERT. DOWN	TEE BRANCH
4	36	16	8	0	0	4	16	18
6	60	28	13	0	0	10	24	35
8	108	54	18	0	0	18	36	90
12	162	90	36	18	0	36	72	144
16	214	118	49	23	12	12	21	200
24	304	165	68	33	16	16	30	289

CONSTRUCTION CRITERIA:
1. FOR WORKING AND/OR TEST PRESSURES< 150 PSI.
2. TYPE 2 TRENCH WITH MINIMUM OF 4.0 FT. OF COVER
3. POLYWRAPPED PIPE
4. 18 FT. PIPE LENGTHS
5. FITTINGS RESTRAINED WITH MEG-A-LUGS OR APPROVED EQUAL

NOTE: IF FIELD CONDITIONS DO NOT CONFORM TO THE NOTED CONSTRUCTION CRITERIA, THE CONTRACTOR SHALL GET WRITTEN APPROVAL FROM AQUA FOR THE NUMBER OF RESTRAINED JOINTS.

THRUST RESTRAINT WITH FIELD-LOK GASKETS

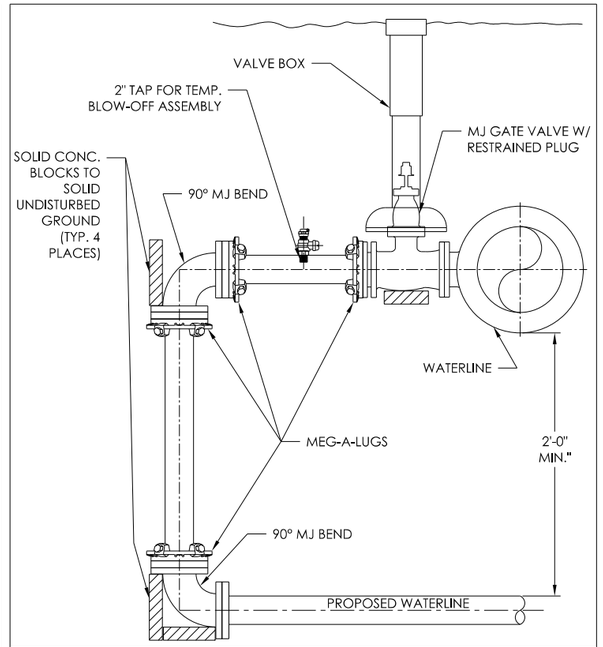

BACKSIDE TAP DETAIL

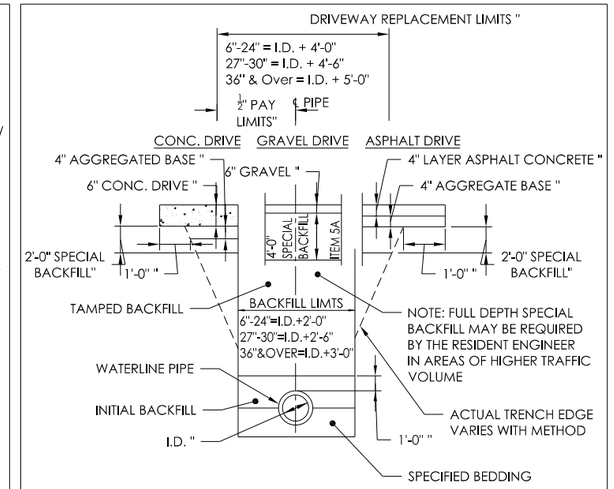

DRIVEWAY RESTORATIONS SHALL BE AS FOLLOWS: CONCRETE DRIVEWAYS WILL BE REPLACED FROM THE NEAREST EXISTING JOINT TO THE STREET, FULL SLAB REPLACEMENT. ASPHALT DRIVEWAYS WILL BE REPLACED FROM THE FARTHEST TRENCH CUT LINE TO THE STREET. REPAIRING ONLY THE TRENCH WIDTH CUT ACROSS A DRIVEWAY IS NOT ACCEPTABLE.

NOTE: THE CONTRACTOR SHALL MAINTAIN ALL DRIVEWAYS PRIOR TO DRIVEWAY REPLACEMENT.

DRIVEWAY ~ PRIVATE DRIVE RESTORATION

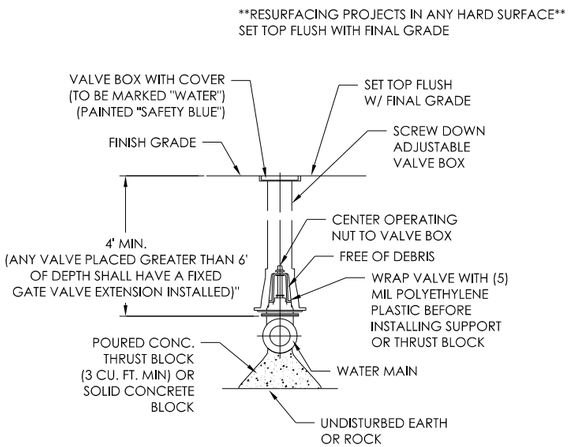

GATE VALVE INSTALLATION DETAIL

1. ALL VALVE BOXES MUST BE KEPT FREE OF DEBRIS DURING CONSTRUCTION.

GATE VALVE INSTALLATION DETAIL

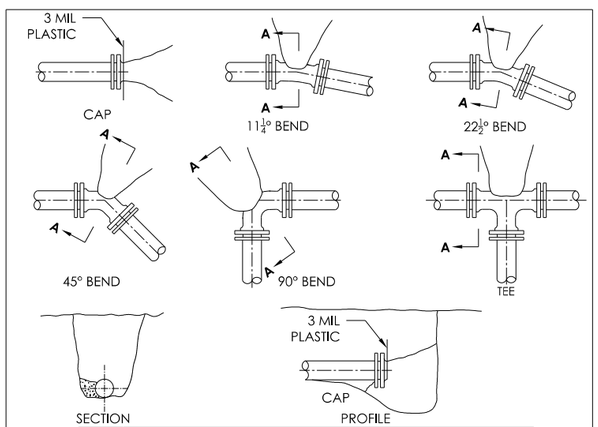

FITTINGS SIZES	BEARING AREA OF BLOCK ON UNDISTURBED SOIL FOR HORIZONTAL BENDS (S.F.) *				
	TEES & ENDS	90° BEND	45° BEND	22½° BEND	11¼° BEND
4	1.5	2	1.5	1.5	1.5
6	3	4	2	1.5	1.5
8	4.5	7	3.5	2	1.5
10	7.5	10.5	5	3	1.5
12	10.5	15	8	4	2.5

* AND VERTICAL BENDS UP

NOTES:
1). ALL BLOCKING SHALL BE POURED AGAINST FIRM, UNDISTURBED SOIL.
2). BEARING AREA AT FITTINGS NOT GIVEN IN BEARING TABLE SHALL BE AS DIRECTED BY THE ENGINEER.
3). WHEN POURING AGAINST PLUGS AND BLIND FLANGES SET A PIECE OF 3 MIL PLASTIC AGAINST FITTING, TO KEEP CONCRETE OFF BOLTS.
4). LAYOUT TO BE APPROVED BY ENGINEER PRIOR TO CONCRETE POUR.
5). BASED ON 150 PSI STATIC PRESSURE PLUS 50 PSI WATER HAMMER AND 2000 PSF SOIL BEARING.
6). PIPE JOINTS AND BOLTS MUST BE ACCESSIBLE AFTER CONCRETE IS POURED.
7). THRUST BLOCK DETAILS ARE SHOWN AS MINIMUM AND MAY REQUIRE ADDITIONAL BLOCKING.
8). CONCRETE CINDER BLOCKS MAY BE USED IN PLACE OF POURED CONCRETE FOR WATER MAINS 12" AND SMALLER.

CONCRETE THRUST BLOCKING DETAILS

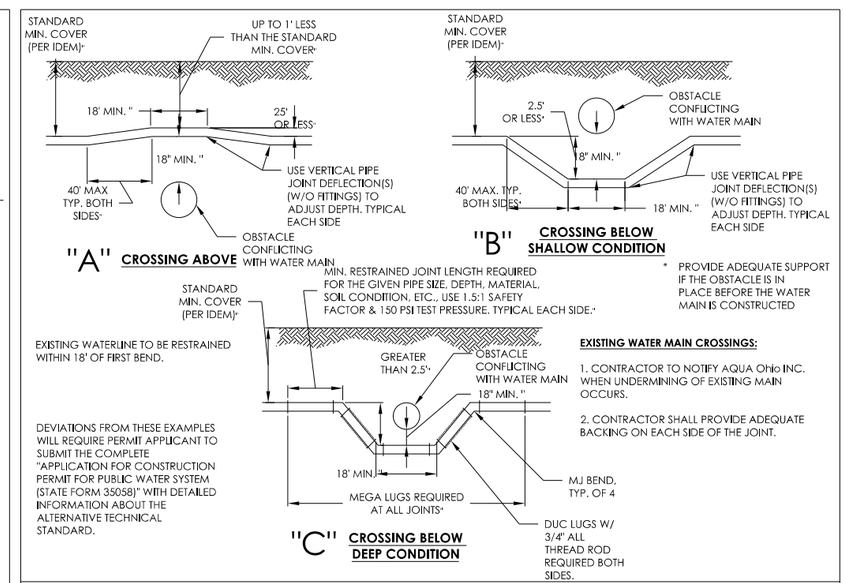

DEVIATIONS FROM THESE EXAMPLES WILL REQUIRE PERMIT APPLICANT TO SUBMIT THE COMPLETE "APPLICATION FOR CONSTRUCTION PERMIT FOR PUBLIC WATER SYSTEM (STATE FORM 35058)" WITH DETAILED INFORMATION ABOUT THE ALTERNATIVE TECHNICAL STANDARD.

EXISTING WATER MAIN CROSSINGS:

1. CONTRACTOR TO NOTIFY AQUA Ohio INC. WHEN UNDERMINING OF EXISTING MAIN OCCURS.
2. CONTRACTOR SHALL PROVIDE ADEQUATE BACKING ON EACH SIDE OF THE JOINT.

DESIGN CRITERIA FOR UTILITY CONFLICTS/CROSSINGS

CALCULATED TWG
CHECKED MDW

WATERLINE DETAILS

STA-21-4.46
STA-172-4.20

P:\ODOT\04\0009_04-7_STA-21.172-4.46.4.20\95369_STA-21.172-4.46\Design\Utilities\Sheets\95369_UN004.dgn Sheet 8/11/2017 9:35:58 AM CMT008

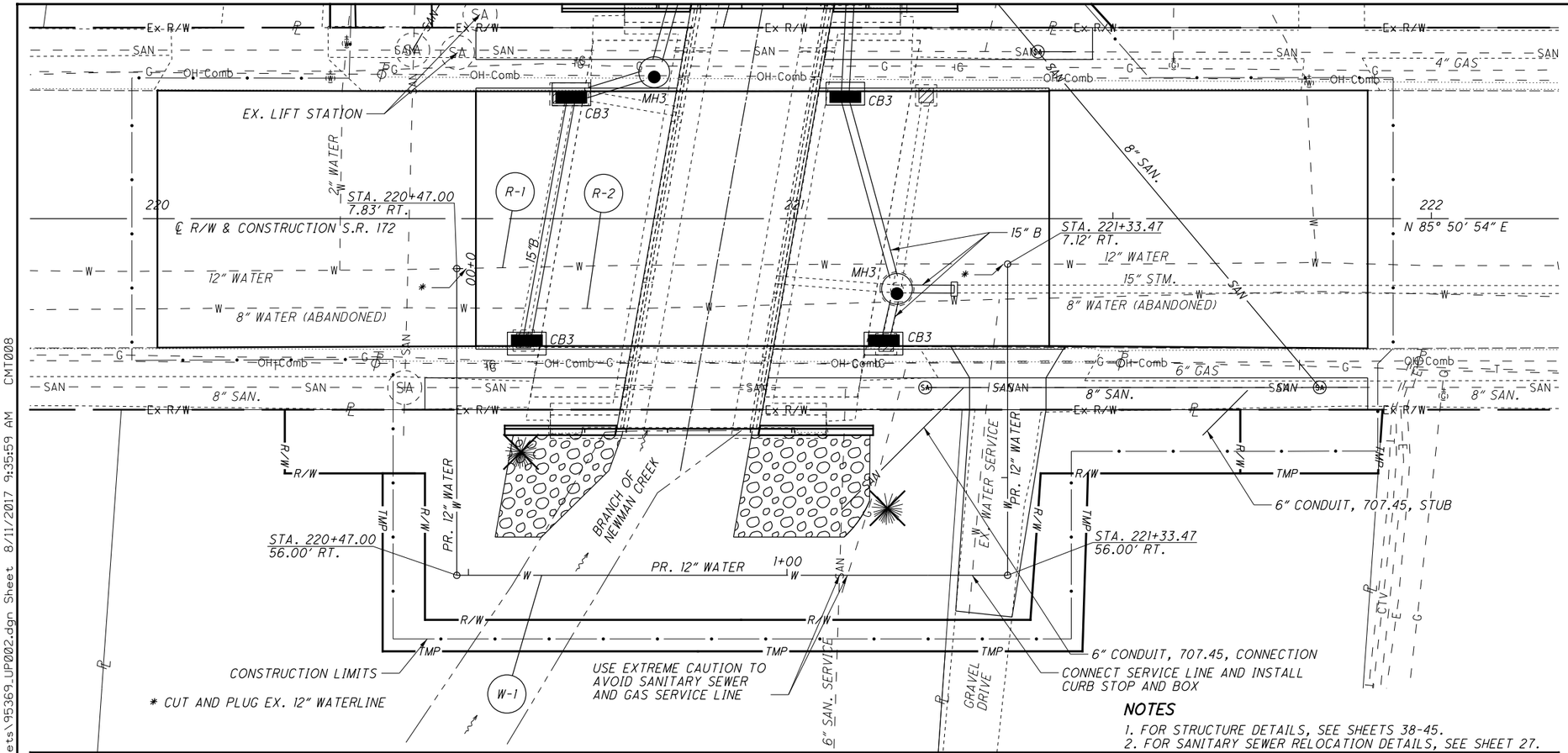

NOTES

1. FOR STRUCTURE DETAILS, SEE SHEETS 38-45.
2. FOR SANITARY SEWER RELOCATION DETAILS, SEE SHEET 27.

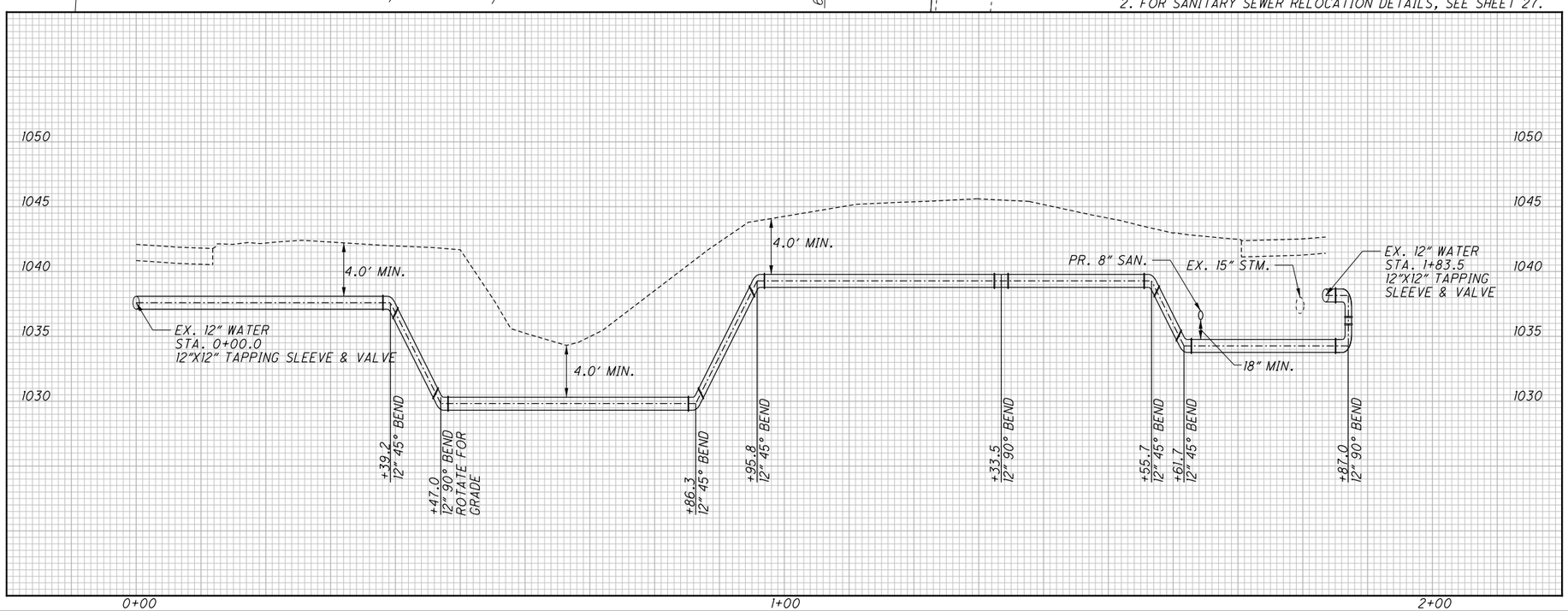

REF NO.	STATION FROM	STATION TO	SIDE	202 PIPE REMOVED, 24" AND UNDER FT	SPECIAL 12" WATER MAIN DIP CLASS 52 PUSHON JOINTS AND FITTINGS (AQUA) FT	SPECIAL 12" WATER MAIN DIP CLASS 52 MECHANICAL JOINTS AND FITTINGS (AQUA) FT	SPECIAL 12" X 12" TAPPING SLEEVE, VALVE AND VALVE BOX (AQUA) EACH	SPECIAL CUT AND PLUG EXISTING 12" WATER LINE EACH	SPECIAL RETAP AND RECONNECT WATER SERVICE CONNECTION FT
R-1	220+47.00	221+33.47	RT	87				2	
R-2	220+47.00	221+33.47	RT	87	184	4	2		10
W-1	220+47.00	221+33.47	RT						
TOTALS CARRIED TO GENERAL SUMMARY				174	184	4	2	2	10

HORIZONTAL SCALE IN FEET 0 5 10 20

CALCULATED TWG
CHECKED MDW

WATERLINE PLAN AND PROFILE
STA-172-4.20

STA-21-4.46
STA-172-4.20

P:\ODT\04\0009_04-7_STA-21_172-4.46_4.20\95369_STA-21_172-4.46\Design\Utilities\Sheets\95369_UP002.dgn Sheet 8/11/2017 9:35:59 AM CMT008

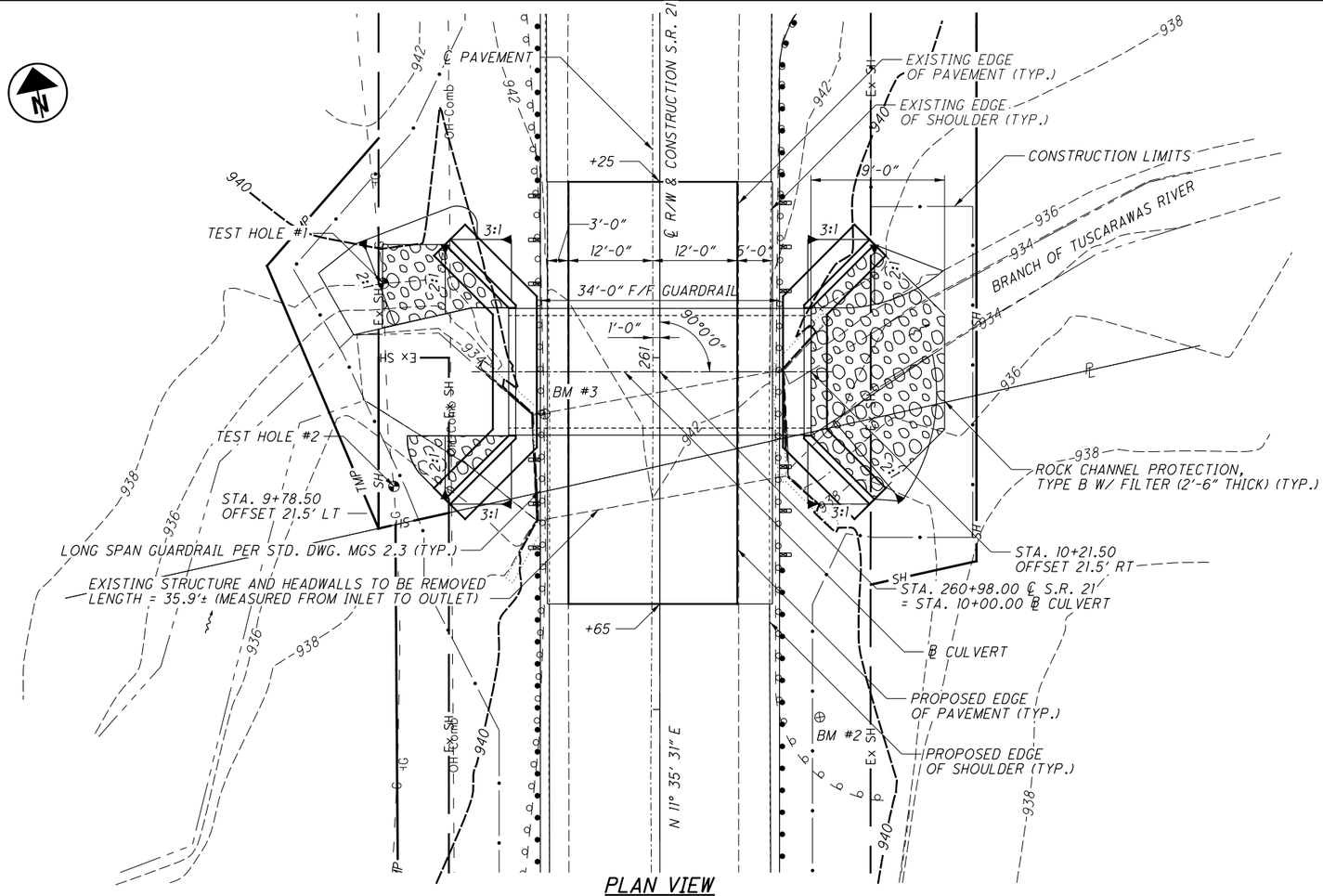

PLAN VIEW

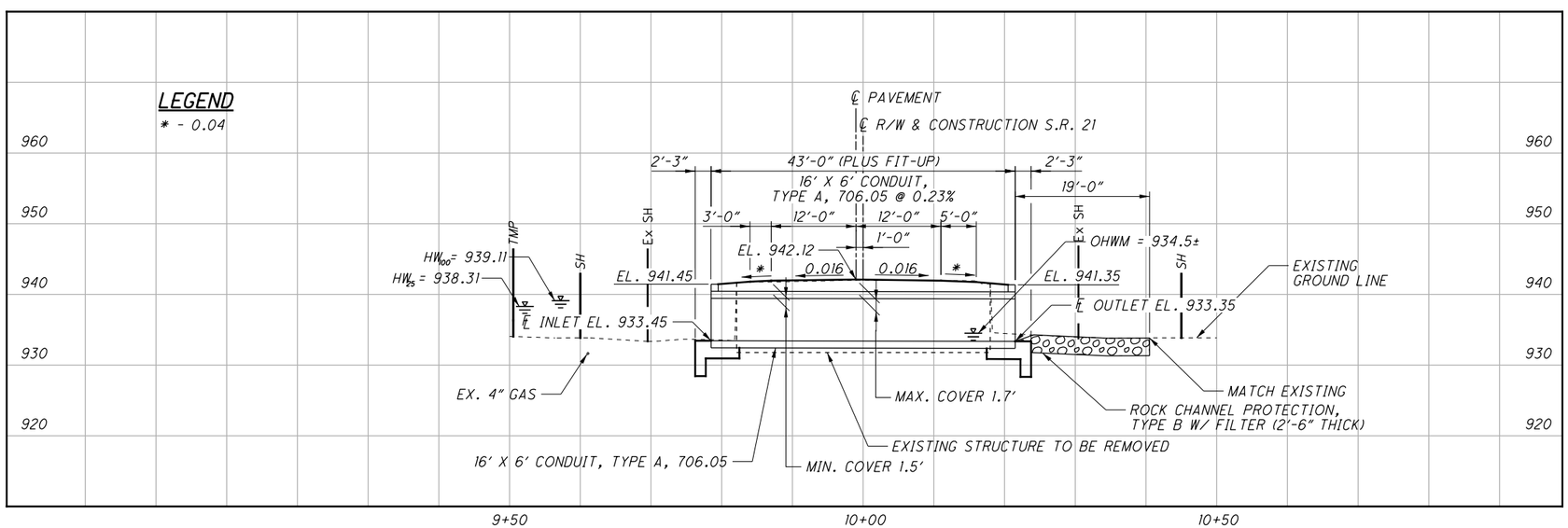

PROFILE ALONG ℄ CULVERT

BENCHMARK DATA

BM #2 STA. 260+48.9, EL. 941.57, OFFSET 22.7' RT.
BM #3 STA. 260+92.0, EL. 941.77, OFFSET 16.3' LT.

FOR ADDITIONAL BENCHMARK INFORMATION, SEE ROADWAY PLAN SHEET 16/51

NOTES

EARTHWORK LIMITS SHOWN ARE APPROXIMATE. ACTUAL SLOPES SHALL CONFORM TO PLAN CROSS SECTIONS.

DESIGN TRAFFIC:

2018 ADT = 5400	2018 ADTT = 432
2038 ADT = 5900	2038 ADTT = 472

DIRECTIONAL DISTRIBUTION = 0.55

LEGEND

⊕ BENCHMARK LOCATION

ROCK CHANNEL PROTECTION, TYPE B W/ FILTER (2'-6" THICK)

HYDRAULIC DATA

DRAINAGE AREA = 4.56 SQ. MILES

Q (25) = 447 CFS	V (25) = 8.84 FT/S
Q (100) = 562 CFS	V (100) = 9.93 FT/S
HW_{25} = 938.31	HW_{100} = 939.11
pH = 6.8	DESIGN SERVICE LIFE = 75 YEARS
ABRASIVE = YES	OHWM = 934.5±

STRUCTURE CLEARS THE 25 YEAR DESIGN HW BY 1.04 FEET.

EXISTING STRUCTURE

TYPE: SINGLE SPAN CONCRETE SLAB ON CONCRETE WALL ABUTMENTS

SPAN: 15'-0"± F/F WALLS

ROADWAY: 32'-9"± F/F GUARDRAIL

LOADING: UNKNOWN

SKEW: 10°± R.F.

ALIGNMENT: TANGENT

CROWN: 0.016±

STRUCTURAL FILE NUMBER: 7600062

DATE BUILT: 1930

DISPOSITION: TO BE REMOVED AND REPLACED

PROPOSED STRUCTURE

TYPE: 16' X 6' PRECAST REINFORCED CONCRETE BOX CULVERT, TYPE A, 706.05

LENGTH: 43'-0"

ROADWAY: 34'-0" F/F GUARDRAIL

LOADING: HL93 WITH FUTURE WEARING SURFACE (FWS) OF 0.060 KIPS/SQ. FT.

SKEW: NONE

WEARING SURFACE: ASPHALT CONCRETE

HEADWALLS: FULL-HEIGHT

ALIGNMENT: TANGENT

CROWN: 0.016 FT/FT

STRUCTURAL FILE NUMBER: 7600063

COORDINATES: LATITUDE 40°42'17.47" N
LONGITUDE 81°31'26.67" W

DESIGN AGENCY
CARPENTER MARTY transportation
6812 SHIERLE PIKE DR. COLUMBUS, OH 43229
614.540.6363 - CONTACT@CMT.COM

DESIGNED	DRAWN	REVIEWED	DATE
STK	STK	GDJ	7-17-17
CHECKED	REVISED	STRUCTURE FILE NUMBER	
AMR		7600063	

STRUCTURE SITE PLAN

BRIDGE NO. STA-21-0446
OVER BRANCH OF TUSCARAWAS RIVER

STA-21-4.46
STA-172-4.20
PID No. 95369

P:\ODT\04\0009_04-7_STA-21_172-4.46_4.20\95369_STA-21_172-4.46\Design\Structures\STA021_0446C\Sheets\021_0446C_SP001.dgn Sheet 8/11/2017 9:35:59 AM CMT008

REFER TO THE FOLLOWING SUPPLEMENTAL SPECIFICATION:

940 DATED 4-17-15

DESIGN SPECIFICATIONS:

THIS STRUCTURE CONFORMS TO THE "LRFD BRIDGE DESIGN SPECIFICATIONS" ADOPTED BY THE AMERICAN ASSOCIATION OF STATE HIGHWAY AND TRANSPORTATION OFFICIALS, 2014, INCLUDING THE 2015 AND 2016 INTERIM SPECIFICATIONS AND THE ODOT BRIDGE DESIGN MANUAL, 2007.

DESIGN DATA: THE FOLLOWING DESIGN DATA IS ASSUMED:

INTERNAL ANGLE OF FRICTION OF BACKFILL SOIL, ϕ_{bf} = 30°
TOTAL UNIT WEIGHT OF BACKFILL SOIL = 120 PCF
INTERNAL ANGLE OF FRICTION (DRAINED), FOUNDATION SOIL, ϕ_f = 28°
UNDRAINED SHEAR STRENGTH (COHESIVE), FOUNDATION SOIL, S_{uf} = 1500 PSF
UNIT WEIGHT OF CONCRETE = 150 PCF
SLOPE OF BACKFILL = 2:1

CONCRETE CLASS QC1 - COMPRESSIVE STRENGTH 4000 PSI (FOOTING, WINGWALL AND FORESLOPE WALL)

REINFORCING STEEL - ASTM A615, A616, OR A617 GRADE 60 MINIMUM YIELD STRENGTH 60,000 PSI (EPOXY COATED)

FORESLOPE WALL ANCHOR DOWELS:

ANCHOR PER CMS 510 WITH NONSHRINK, NONMETALLIC GROUT CONFORMING TO CMS 705.20 AND TO A DEPTH OF 9". PAYMENT FOR DOWEL HOLES, GROUT AND INSTALLATION SHALL BE INCLUDED WITH ITEM 511.

THREADED INSERTS OR NON-PROTRUDING MECHANICAL CONNECTORS CAPABLE OF DEVELOPING AT LEAST 125 PERCENT OF THE SPECIFIED YIELD STRENGTH OF THE REINFORCEMENT SHOWN ARE AN ACCEPTABLE ALTERNATIVE TO RESIN BONDING. MAINTAIN A MINIMUM COVER OF 3 INCHES AT THE BOTTOM OF THE CULVERT SLAB. MECHANICAL CONNECTORS SHALL HAVE AN "L-SHAPED" BAR INSIDE THE CULVERT WITH A MINIMUM HORIZONTAL LENGTH OF 12 INCHES. THE DEPARTMENT WILL CONSIDER PAYMENT FOR INSERTS OR MECHANICAL CONNECTORS AS INCIDENTAL TO ITEM 611, 16' X 6' CONDUIT, TYPE A, 706.05, AS PER PLAN.

PREFORMED EXPANSION JOINT FILLER:

PREFORMED EXPANSION JOINT FILLER (PEJF) CONFORMING TO CMS 705.03, 1 INCH THICK, SHALL BE PLACED ABOVE THE FOOTING BETWEEN THE SIDES OF THE BOX CULVERT AND THE ENDS OF THE WINGWALLS. PAYMENT FOR MATERIALS AND INSTALLATION SHALL BE INCLUDED WITH ITEM 516, 1" PREFORMED EXPANSION JOINT FILLER.

SEALING OF FORESLOPE WALL AND WINGWALLS:

ALL EXPOSED FORESLOPE WALL AND WINGWALL CONCRETE SHALL BE SEALED WITH EPOXY-URETHANE SEALER. THE LIMITS SHALL BE AS SHOWN IN THE DIAGRAMS BELOW. PAYMENT FOR THE EPOXY-URETHANE SEALER SHALL BE PER ITEM 512, SEALING OF CONCRETE SURFACES (EPOXY-URETHANE).

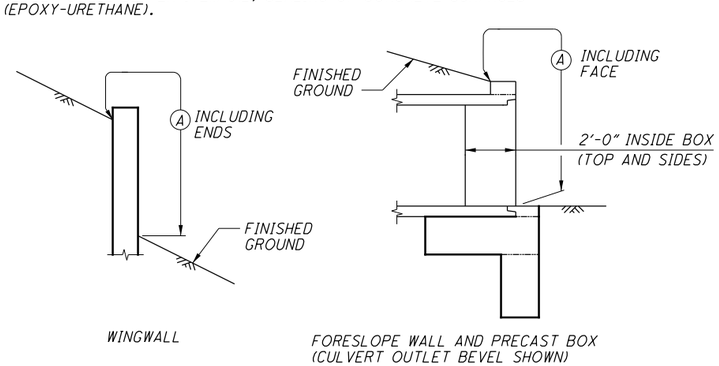

(A) - SEAL ENTIRE CONCRETE SURFACE AREA

ITEM 511 WINGWALLS OR HEADWALLS FOR 611 ITEMS

FOR ITEM 706.05 WITH A CAST-IN-PLACE WINGWALL OR HEADWALL A PRECAST ALTERNATIVE MAY BE FURNISHED PER 602.03. THE PRECAST ALTERNATIVE WILL MEET THE CAST-IN-PLACE STRUCTURAL DESIGN LOADINGS, DESIGN HEIGHT, AND DESIGN LENGTH DIMENSIONS.

FULL COMPENSATION FOR THE PRECAST WINGWALL OR HEADWALL IS THE NUMBER OF CUBIC YARDS OF ITEM 511 AND POUNDS OF ITEM 509 FOR THE CORRESPONDING CAST-IN-PLACE STRUCTURE.

WATERPROOFING:

TYPE 2 WATERPROOFING, PER CMS 512.08 AND 711.25, SHALL EXTEND VERTICALLY DOWN THE ENTIRE SIDES OF THE PRECAST CULVERT SECTION FOR ALL PORTIONS OF THE CULVERT WHICH SHALL BE IN CONTACT WITH THE BACKFILL. PAYMENT FOR THE MEMBRANE WATERPROOFING SHALL BE AT THE CONTRACT PRICE BID PER SQUARE YARD FOR ITEM 512, TYPE 2 WATERPROOFING.

TYPE 2 WATERPROOFING, PER CMS 512.08 AND 711.25 SHALL BE APPLIED TO THE ENTIRE TOP SURFACE OF THE PRECAST CULVERT SECTIONS AND SHALL EXTEND ONE FOOT VERTICALLY DOWN THE SIDES FOR ALL PORTIONS OF THE CULVERT WHICH SHALL BE IN CONTACT WITH THE BACKFILL. PAYMENT FOR THE MEMBRANE WATERPROOFING SHALL BE AT THE CONTRACT PRICE BID PER SQUARE YARD FOR ITEM 512, TYPE 2 WATERPROOFING.

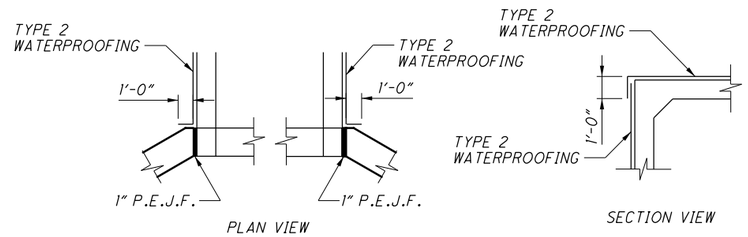

POROUS BACKFILL:

POROUS BACKFILL WITH GEOTEXTILE FABRIC 2'-0" THICK SHALL BE PLACED BEHIND THE WINGWALLS ONLY AND SHALL EXTEND TO 12" BELOW THE EMBANKMENT SURFACE. GEOTEXTILE FABRIC SHALL BE PLACED BETWEEN THE POROUS BACKFILL AND REPLACED EXCAVATION ADJACENT TO THE STRUCTURE. IT SHALL TURN UNDER THE BOTTOM OF THE POROUS BACKFILL AND RETURN 6" ABOVE THE TOP ELEVATION OF THE WEEPHOLE. WEEPHOLES SHALL BE PLACED 6" TO 12" ABOVE THE NORMAL WATER ELEVATION OR GROUND LINE AND SHALL HAVE A MAXIMUM SPACING OF 10'-0". A MINIMUM OF ONE WEEPHOLE SHALL BE PROVIDED PER WINGWALL.

ASBESTOS NOTIFICATION:

AN ASBESTOS SURVEY OF BRIDGE STRUCTURE NO. STA-21-0446 (SFN 7600062) SCHEDULED FOR REPLACEMENT WAS CONDUCTED BY A CERTIFIED ASBESTOS HAZARD EVALUATION SPECIALIST. THE SURVEY DETERMINED THAT NO ASBESTOS IS PRESENT ON THE BRIDGE STRUCTURE.

A COPY OF THE ASBESTOS INSPECTION REPORT WILL BE PROVIDED TO THE SUCCESSFUL BIDDER. THE CONTRACTOR SHALL COMPLETE AND SIGN AN OHIO ENVIRONMENTAL PROTECTION AGENCY (OEPA) NOTIFICATION OF DEMOLITION AND RENOVATION FORM (FORM REVISED APRIL 2015) FOR THE BRIDGE AND SUBMIT IT TO:

TERRI DZIENIS, ADMINISTRATOR
DIVISION OF AIR POLLUTION CONTROL
420 MARKET AVENUE N.
CANTON, OH 44702-1544
ATTN: JACLYN HUPP
(330) 489-3385

AT LEAST TEN (10) WORKING DAYS PRIOR TO THE START OF ANY DEMOLITION AND/OR REHABILITATION.

SUBMISSION OF AN INCORRECT VERSION OF THE OEPA FORM MAY BE REJECTED BY THE DIVISION OF AIR POLLUTION CONTROL. SEE:
http://epa.ohio.gov/Portals/27/atu/asbestos/DemolitionNotificationForm.pdf
FOR THE MOST CURRENT VERSION OF THE OEPA FORM.

THE CONTRACTOR SHALL PROVIDE A COPY OF THE COMPLETED AND SIGNED FORM TO THE ENGINEER. INFORMATION REQUIRED ON THE FORM WILL INCLUDE: 1) THE CONTRACTORS NAME AND ADDRESS, 2) THE SCHEDULED DATES FOR THE START AND COMPLETION OF THE BRIDGE REMOVAL AND 3) A DESCRIPTION OF THE PLANNED DEMOLITION WORK AND THE METHOD(S) TO BE USED. A COPY OF THE ASBESTOS INSPECTION REPORT IS AVAILABLE FOR INSPECTION AT THE ODOT DISTRICT 4 OFFICE, 2088 SOUTH ARLINGTON, AKRON, OHIO 44306.

BASIS FOR PAYMENT - THE CONTRACTOR SHALL FURNISH ALL FEES, LABOR, AND MATERIAL NECESSARY TO COMPLETE AND SUBMIT THE OEPA NOTIFICATION OF DEMOLITION AND RENOVATION FORM. PAYMENT FOR THIS WORK SHALL BE INCLUDED IN ITEM 202, STRUCTURE REMOVED, AS PER PLAN.

UNSUITABLE SOILS

THE FOLLOWING ITEMS ARE TO BE USED AS DIRECTED BY THE ENGINEER TO ADDRESS UNSUITABLE SOILS ENCOUNTERED IN THE AREA UNDER THE PROPOSED BOX CULVERT.
ITEM 203 - EXCAVATION 45 CU YD
ITEM 203 - GRANULAR MATERIAL, TYPE C (703.16), 45 CU YD
ITEM 204 - GEOTEXTILE FABRIC, TYPE D, 90 SQ YD

ESTIMATED QUANTITIES — DESIGNED: STK DATE: 6-27-17 — CHECKED: AMR DATE: 6-27-17

ITEM	EXTENSION	TOTAL 02/NHS/BR	UNIT	DESCRIPTION	SEE SHEET
202	11001	-	LS	STRUCTURE REMOVED, AS PER PLAN	2
203	10000	45	CY	EXCAVATION	
203	35120	45	CY	GRANULAR MATERIAL, TYPE C	
204	50000	90	SY	GEOTEXTILE FABRIC	
503	11100	-	LS	COFFERDAMS AND EXCAVATION BRACING	
503	21300	-	LS	UNCLASSIFIED EXCAVATION	
509	10000	5303	LB	EPOXY COATED REINFORCING STEEL	
511	46010	16	CY	CLASS QC1 CONCRETE, RETAINING/WINGWALL NOT INCLUDING FOOTING	
511	46510	47	CY	CLASS QC1 CONCRETE, FOOTING	
511	46610	2	CY	CLASS QC1 CONCRETE, HEADWALL	
512	10100	62	SY	SEALING OF CONCRETE SURFACES (EPOXY-URETHANE)	
512	33000	168	SY	TYPE 2 WATERPROOFING	
516	13600	36	SF	1" PREFORMED EXPANSION JOINT FILLER	
518	21200	13	CY	POROUS BACKFILL WITH GEOTEXTILE FABRIC	
611	96441	43	FT	16' X 6' CONDUIT, TYPE A, 706.05, AS PER PLAN (DESIGN COVER <= 2')	6

DESIGN AGENCY
CARPENTER MARTY transportation
6612 SINGLETREE DR. COLUMBUS, OH 43229
614.885.7970 • 800.362.2567

DESIGNED	DRAWN	REVIEWED	DATE
STK	STK	GDJ	7-17-17
CHECKED	REVISED	STRUCTURE FILE NUMBER	
AMR		7600063	

GENERAL NOTES & ESTIMATED QUANTITIES
BRIDGE NO. STA-21-0446
OVER BRANCH OF TUSCARAWAS RIVER

STA-21-4.46
STA-172-4.20
PID No. 95369

P:\ODT\04\0009_04-7_STA-21.172-4.46_4.20\95369_STA-21.172-4.46\Design\Structures\STA021_0446C\Sheets\021_0446C_SN001.dgn Sheet 8/11/2017 9:36:00 AM CMT008

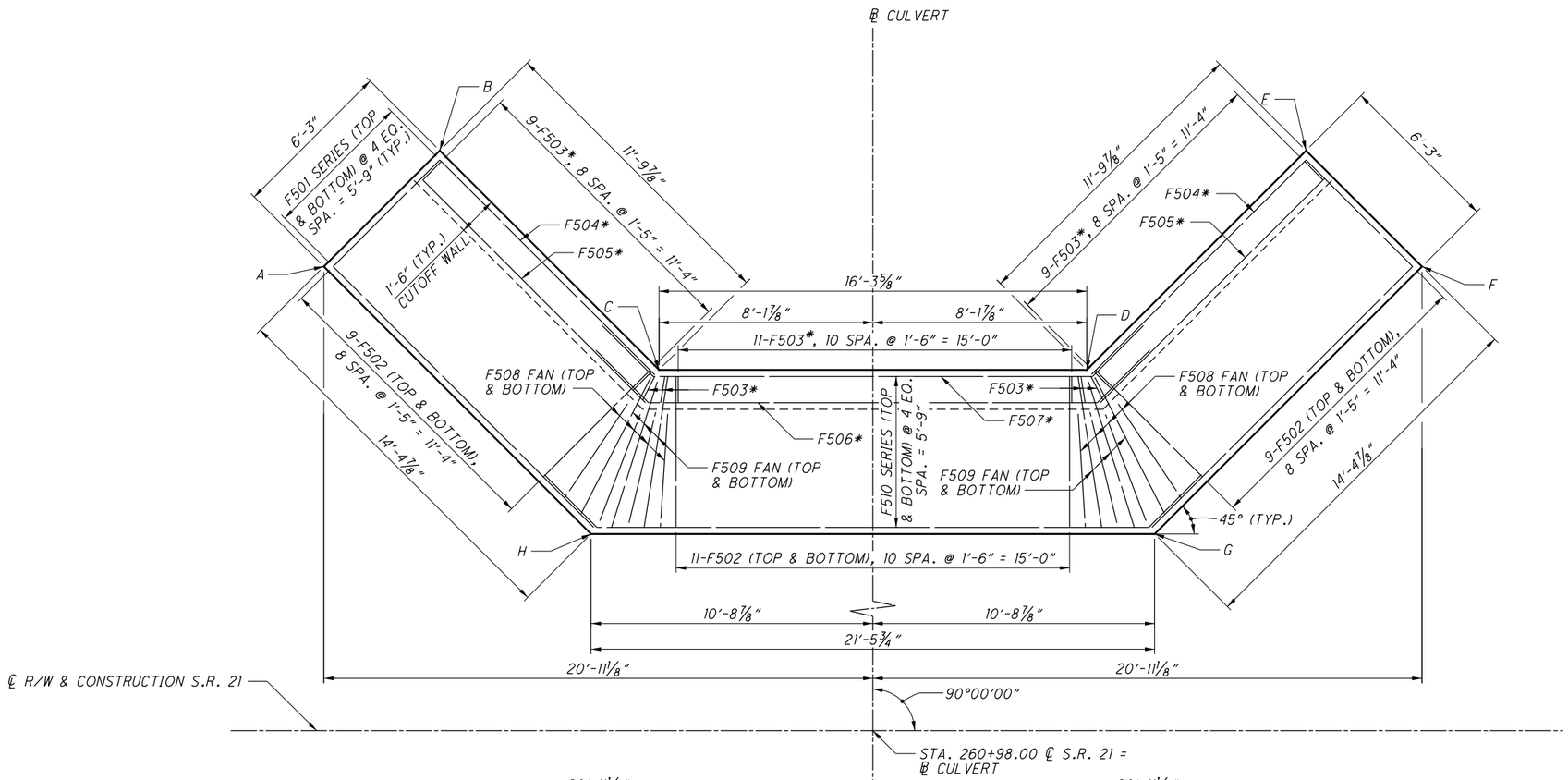

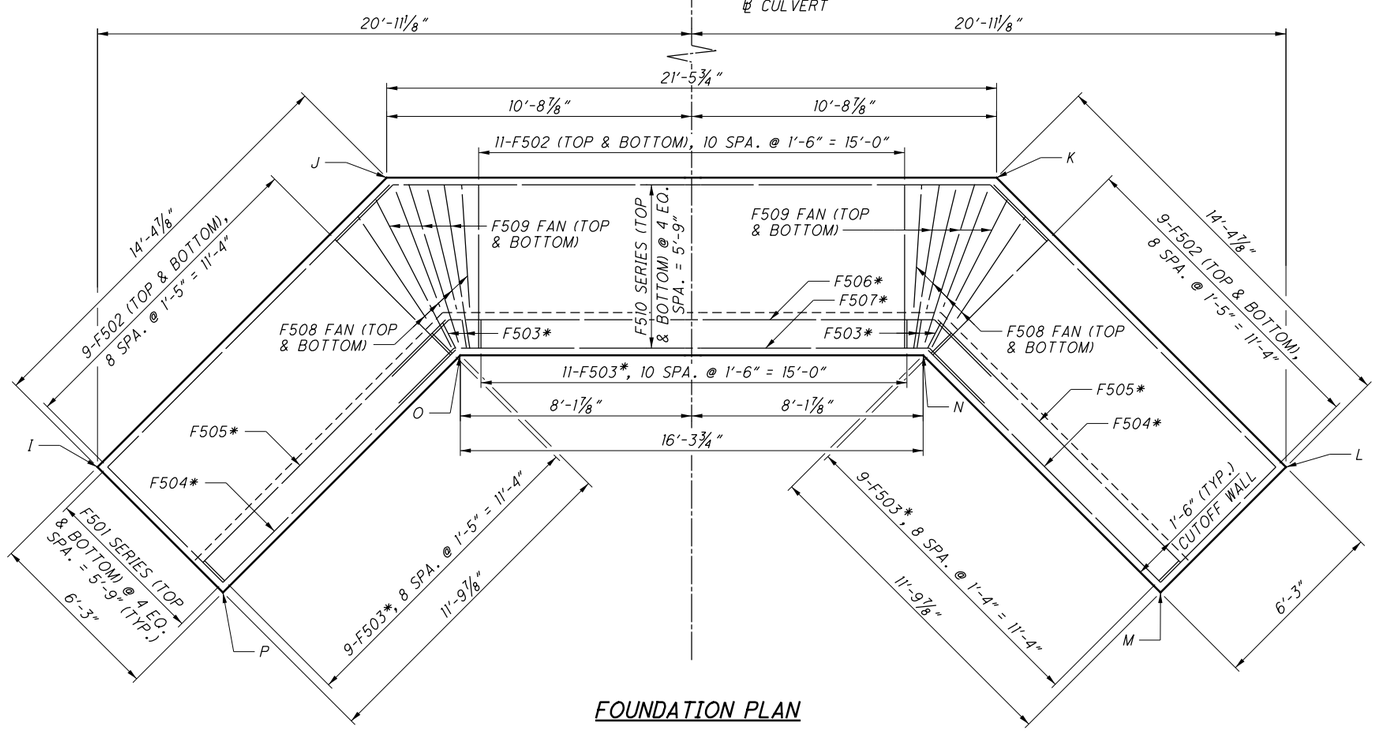

FOUNDATION PLAN

INLET		
POINT	STATION	OFFSET FROM ℄ S.R. 21
A	260+77.07	27.69' LT
B	260+81.49	32.11' LT
C	260+89.85	23.75' LT
D	261+06.15	23.75' LT
E	261+14.51	32.11' LT
F	261+18.93	27.69' LT
G	261+08.74	17.50' LT
H	260+87.26	17.50' LT

OUTLET		
POINT	STATION	OFFSET FROM ℄ S.R. 21
I	260+77.07	27.69' RT
J	260+87.26	17.50' RT
K	261+08.74	17.50' RT
L	261+18.93	27.69' RT
M	261+14.51	32.11' RT
N	261+06.15	23.75' RT
O	260+89.85	23.75' RT
P	260+81.49	32.11' RT

LEGEND

* - PLACED IN CUTOFF WALL

NOTES

1. SEE SHEET 5/6 FOR ADDITIONAL FOOTING DETAILS.
2. MINIMUM LAP SPLICE LENGTH: #5 BAR = 33 INCHES

DESIGN AGENCY
CARPENTER MARTY transportation
6612 SINGLETREE DR. COLUMBUS, OH 43229
ENGINEERS · CONTRACTORS

DESIGNED	DRAWN	REVIEWED	DATE
STK	STK	GDJ	7-17-17
CHECKED	REVISED	STRUCTURE FILE NUMBER	
AMR		7600063	

FOUNDATION PLAN
BRIDGE NO. STA-21-0446
OVER BRANCH OF TUSCARAWAS RIVER

STA-21-4.46
STA-172-4.20
PID No. 95369

P:\ODT\04\0009_04-7_STA-21.172-4.46_4.20\95369_STA-21.172-4.46\Design\Structures\STA021.0446C\Sheets\021.0446C_S0001.dgn Sheet 8/11/2017 9:36:01 AM CMT008

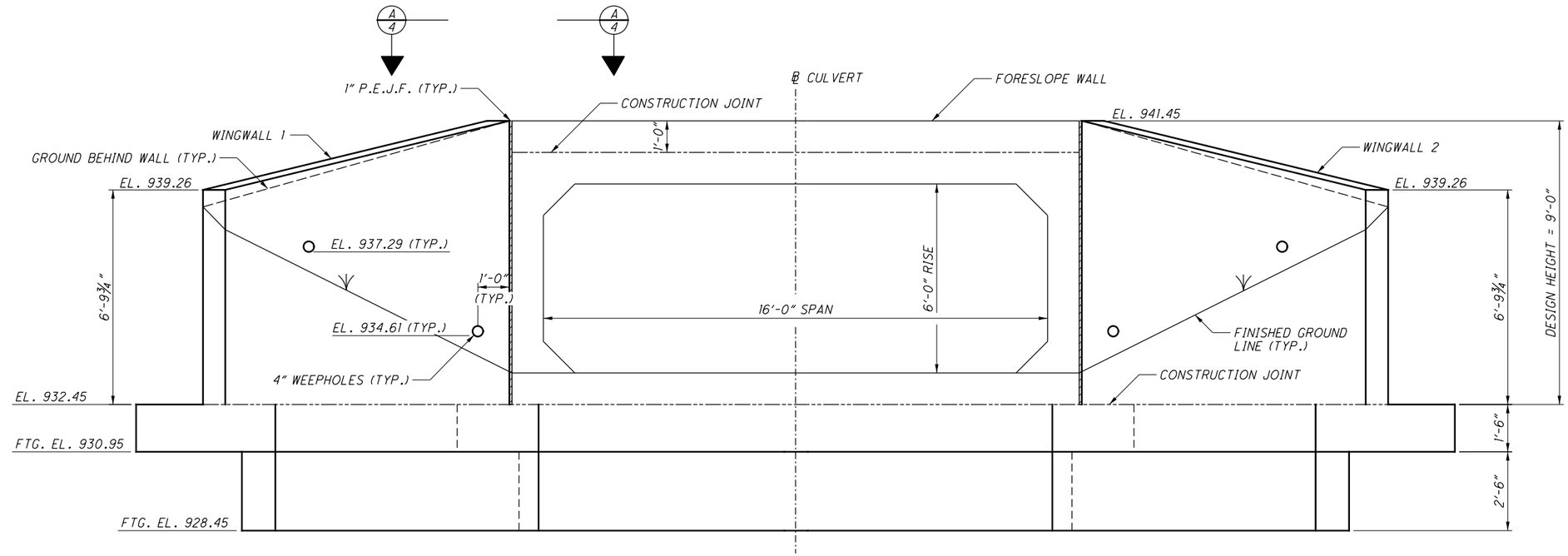

ELEVATION - INLET

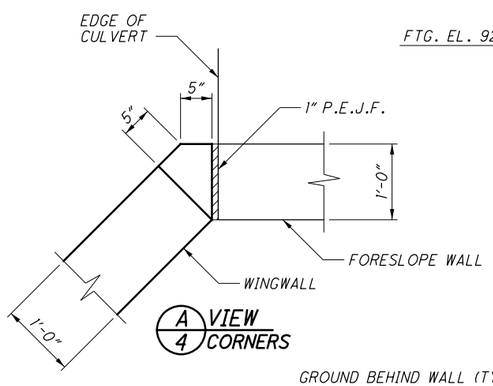

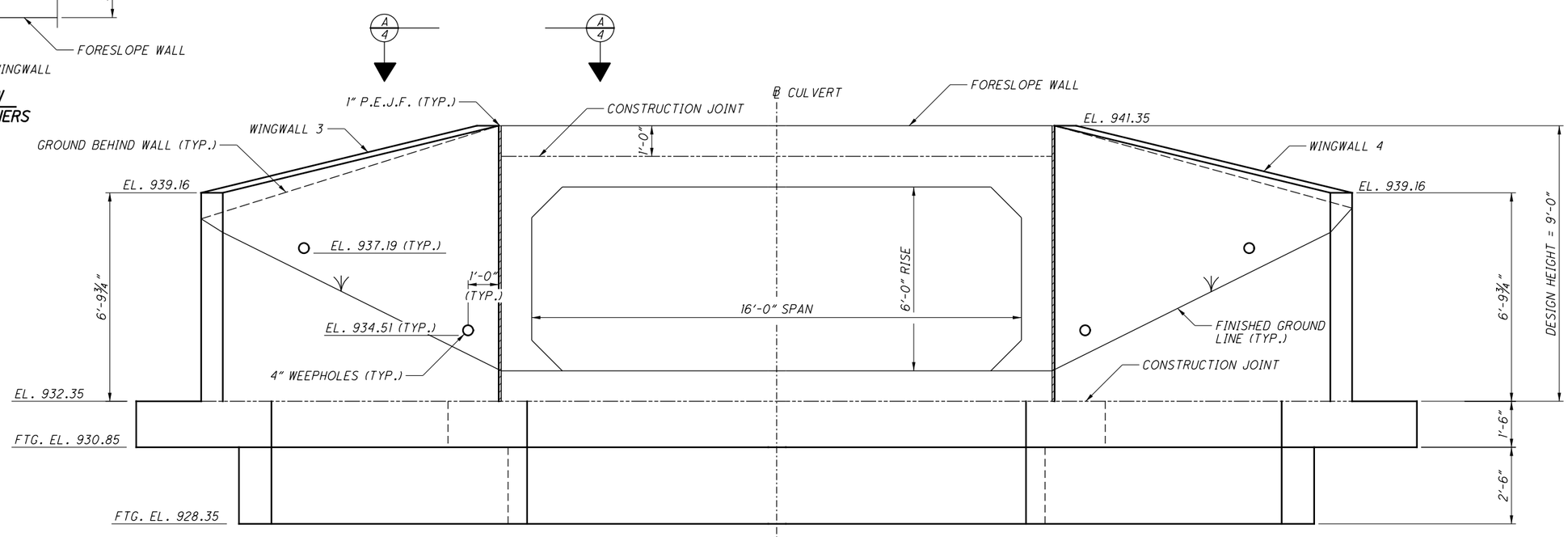

ELEVATION - OUTLET

DESIGN AGENCY
CARPENTER MARTY transportation
6812 SINGLETREE DR. COLUMBUS, OH 43229
ENGINEERS CONTRACTORS

DESIGNED	DRAWN	REVIEWED	DATE
STK	STK	GDJ	7-17-17
CHECKED	REVISED	STRUCTURE FILE NUMBER	
AMR		7600063	

CULVERT ELEVATIONS
BRIDGE NO. STA-21-0446
OVER BRANCH OF TUSCARAWAS RIVER

STA-21-4.46
STA-172-4.20
PID No. 95369

P:\ODT\04\0009_04-7_STA-21.172-4.46.4.20\95369_STA-21.172-4.46\Design\Structures\STA021.0446C\Sheets\021.0446C_ST001.dgn Sheet 8/11/2017 9:36:02 AM CMT008

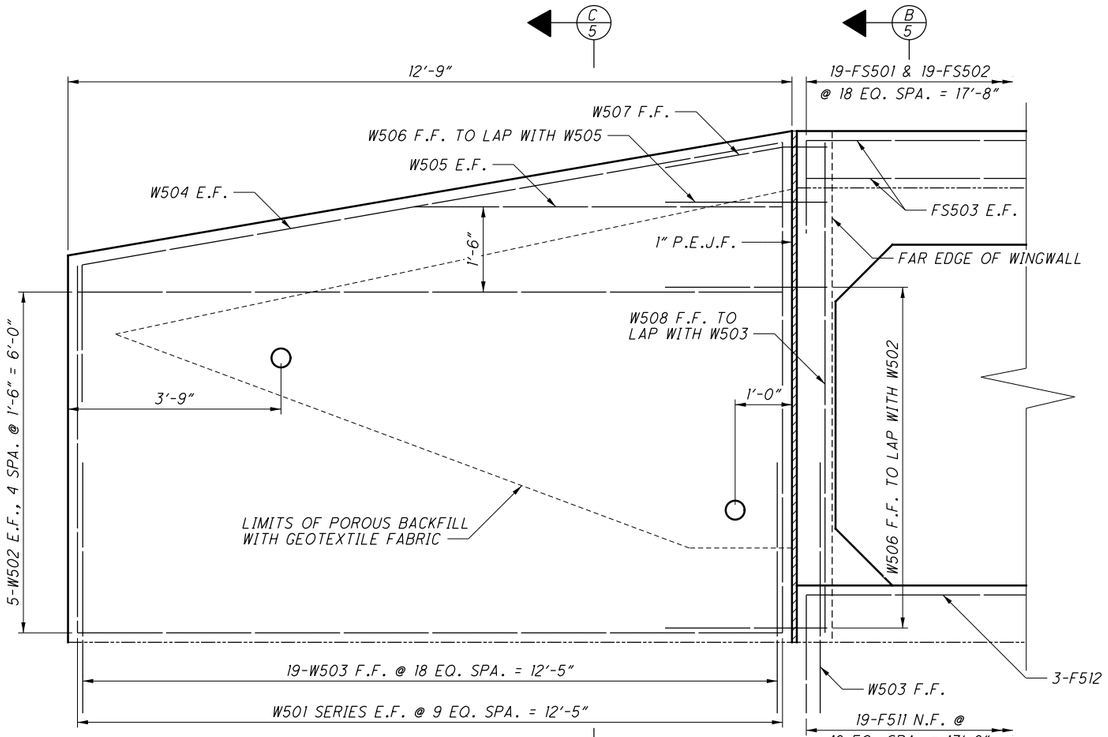

ELEVATION - WW1

WW2 SIMILAR

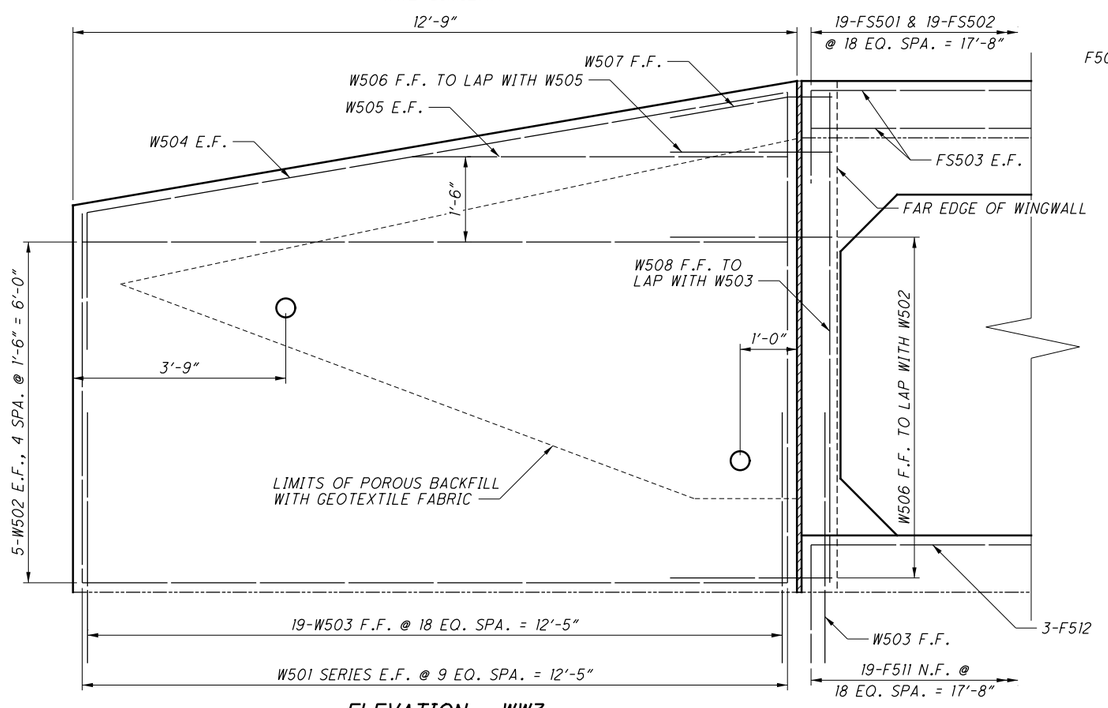

ELEVATION - WW3

WW4 SIMILAR

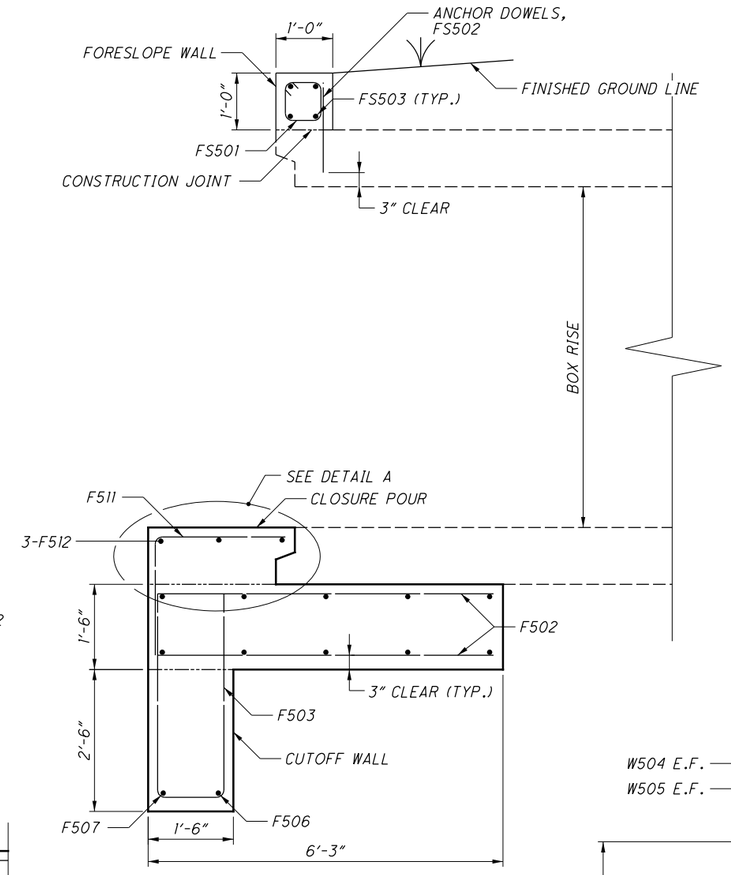

B/5 SECTION

BARS NOT LABELED ARE F510 SERIES

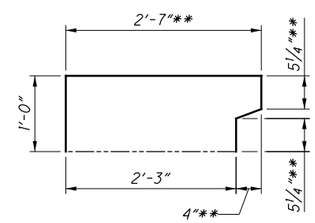

DETAIL A

INLET SHOWN,
OUTLET SIMILAR

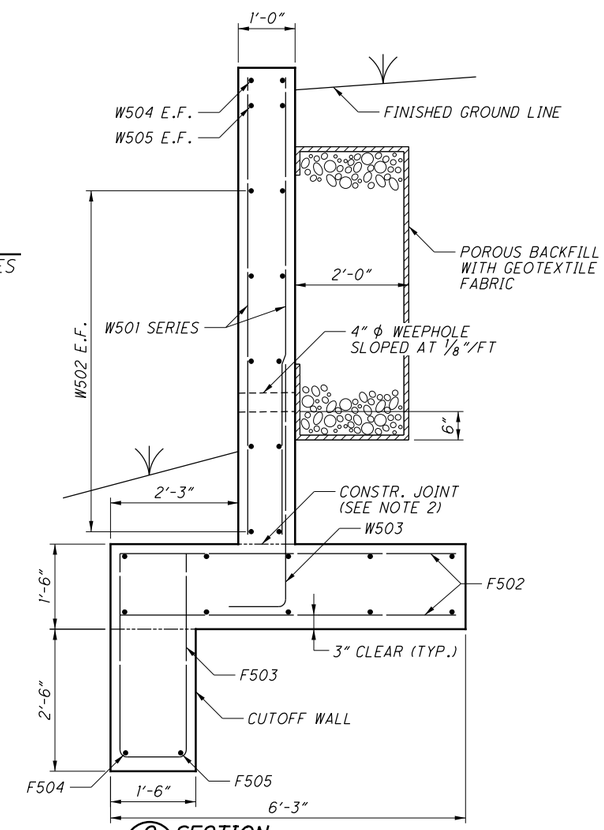

C/5 SECTION

BARS NOT LABELED ARE F501 SERIES

NOTES

1. ADJUST HORIZONTAL REINFORCEMENT TO AVOID INTERFERENCE WITH WEEPHOLES.
2. THE INTERFACE BETWEEN THE TOP OF FOOTING AND THE BASE OF THE WINGWALL STEM SHALL BE INTENTIONALLY ROUGHENED TO A FULL AMPLITUDE OF APPROXIMATELY 1/4" BY MEANS OF A SERRATED TROWEL.

LEGEND

E.F. - EACH FACE
F.F. - FAR FACE
N.F. - NEAR FACE
** - VERIFY WITH MANUFACTURER PRIOR TO CONSTRUCTION

DESIGN AGENCY
CARPENTER MARTY transportation
6612 SINGLETREE DR. COLUMBUS, OH 43229
ARCHITECT · ENGINEER

DESIGNED	DRAWN	REVIEWED	DATE
STK	STK	GDJ	7-17-17
CHECKED	REVISED	STRUCTURE FILE NUMBER	
AMR		7600063	

WINGWALL DETAILS
BRIDGE NO. STA-21-0446
OVER BRANCH OF TUSCARAWAS RIVER

STA-21-4.46
STA-172-4.20
PID No. 95369

P:\ODT\04\0009_04-7_STA-21.172-4.46-4.20\95369_STA-21.172-4.46\Design\Structures\STA021_0446C\Sheets\021_0446C_SM001.dgn Sheet 8/11/2017 9:36:03 AM CMT008

MARK	NUMBER	LENGTH	WEIGHT	TYPE	DIMENSIONS			
					A	B	C	INC
WINGWALLS								
W501	8 SERIES OF 10	6'-5" TO 8'-7"	626	STR				3" (-)
W502	40	12'-5"	519	STR				
W503	80	5'-3"	439	1	1'-0"	4'-5"		
W504	8	14'-11"	125	19	12'-7"	5"	2'-5"	
W505	8	6'-6"	55	STR				
W506	24	2'-6"	63	19	2'-5"	1"	1"	
W507	4	2'-6"	11	19	2'-0"	6"	1"	
W508	4	8'-7"	36	STR				
SUB-TOTAL			1874					

MARK	NUMBER	LENGTH	WEIGHT	TYPE	DIMENSIONS					
					A	B	C	D	E	INC
FOOTINGS AND CUTOFF WALLS										
F501	8 SERIES OF 5	11'-7" TO 14'-0"	534	STR						7 1/4"
F502	116	5'-11"	716	STR						
F503	66	8'-1"	557	2	3'-7"	1'-2"	3'-7"			
F504	4	11'-7"	49	STR						
F505	4	12'-1"	51	STR						
F506	2	22'-11"	48	20	2'-0"	2'-0"	17'-4"	2'-0"	2'-0"	
F507	2	22'-1"	47	20	2'-0"	2'-0"	16'-6"	2'-0"	2'-0"	
F508	32	4'-4"	145	STR						
F509	24	5'-10"	147	STR						
F510	4 SERIES OF 5	22'-1" TO 26'-10"	511	20	2'-0"	2'-0"	16'-6" TO 21'-3"	2'-0"	2'-0"	1'-2 1/4"
F511	38	4'-3"	169	1	2'-3"	2'-2"				
F512	6	17'-8"	111	STR						
SUB-TOTAL			3085							

MARK	NUMBER	LENGTH	WEIGHT	TYPE	DIMENSIONS	
					A	B
FORESLOPE WALLS						
FS501	38	3'-4"	133	3	8"	8"
FS502#	38	1'-7"	63	STR		
FS503	8	17'-8"	148	STR		
SUB-TOTAL			344			

NOTES

1. THE BAR SIZE NUMBER IS SPECIFIED ON THE PLANS IN THE BAR MARK COLUMN. THE FIRST DIGIT WHERE THREE DIGITS ARE USED, AND THE FIRST TWO DIGITS WHERE FOUR DIGITS ARE USED, INDICATES THE BAR SIZE NUMBER. FOR EXAMPLE, F501 IS A NO. 5 BAR. BAR DIMENSIONS ARE OUT TO OUT UNLESS OTHERWISE INDICATED.
2. ALL REINFORCING STEEL TO BE EPOXY COATED.
3. BELOW ARE THE AREAS REQUIRED FOR THE REINFORCEMENT IN THE CULVERT:

As1 = 0.80 IN^2/FT
As2 = 0.83 IN^2/FT
As3 = 0.71 IN^2/FT
As4 = 0.29 IN^2/FT
As5 = 0.29 IN^2/FT
As6 = 0.29 IN^2/FT
As7 = 0.29 IN^2/FT
As8 = 0.29 IN^2/FT

LEGEND

- LENGTH ACCOUNTS FOR 9" EMBEDMENT INTO CULVERT

BENDING DIAGRAM

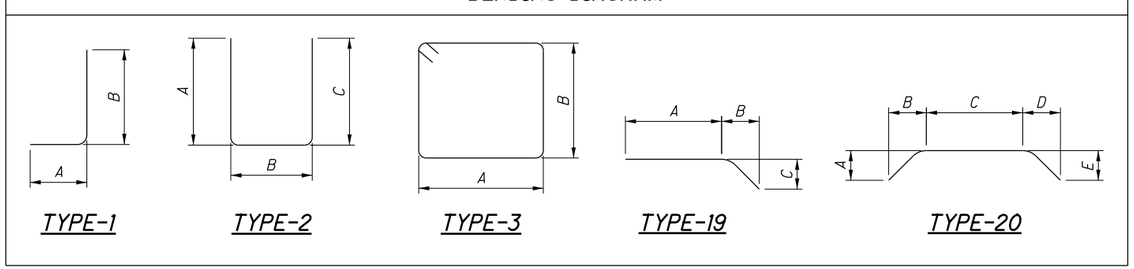

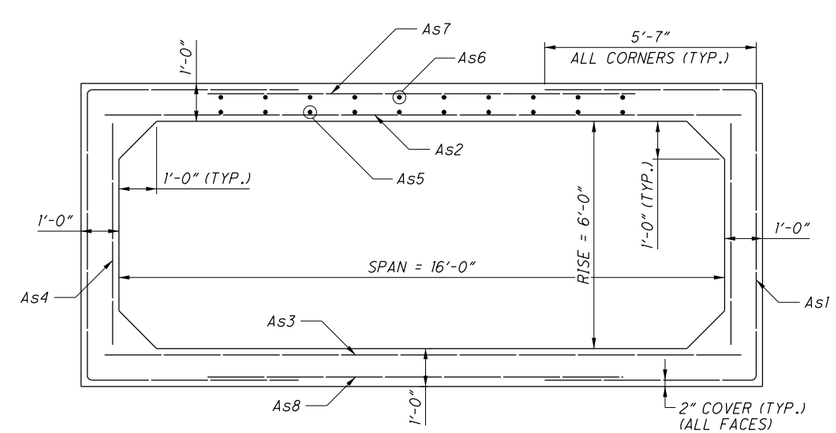

TYPICAL BOX CULVERT SECTION

DESIGN AGENCY
CARPENTER MARTY transportation
6612 SINGLETREE DR. COLUMBUS, OH 43229
ARCHITECT · ENGINEERS

DESIGNED	DRAWN	REVIEWED	DATE
STK	STK	GDJ	7-17-17
CHECKED	REVISED	STRUCTURE FILE NUMBER	
AMR		7600063	

REINFORCING STEEL LIST
BRIDGE NO. STA-21-0446
OVER BRANCH OF TUSCARAWAS RIVER

STA-21-4.46
STA-172-4.20
PID No. 95369

P:\ODT\04\0009_04-7_STA-21.172-4.46_4.20\95369_STA-21.172-4.46\Design\Structures\STA021.0446C\Sheets\021.0446C_SL001.dgn Sheet 8/11/2017 9:36:03 AM CMT008

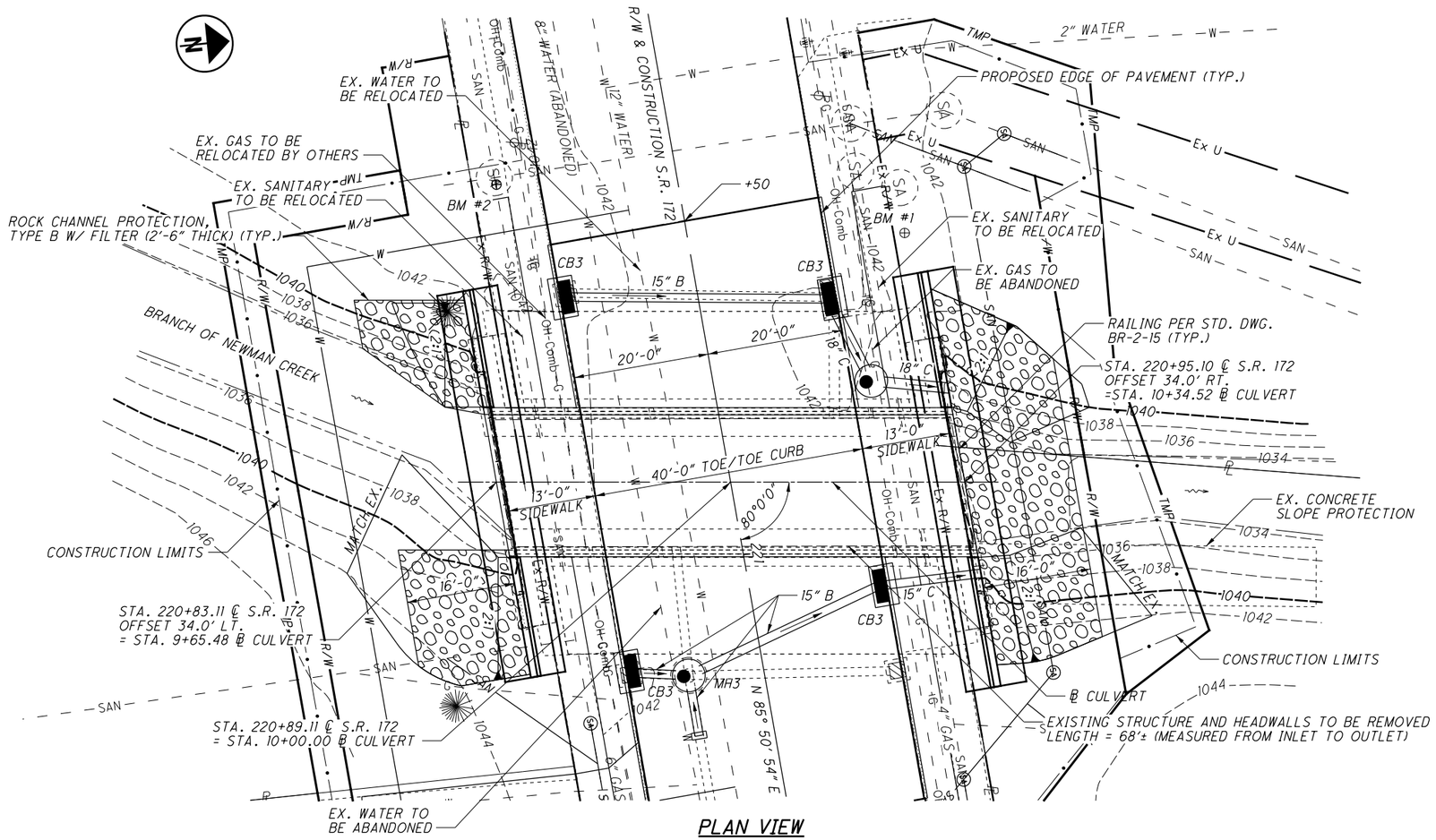

PLAN VIEW

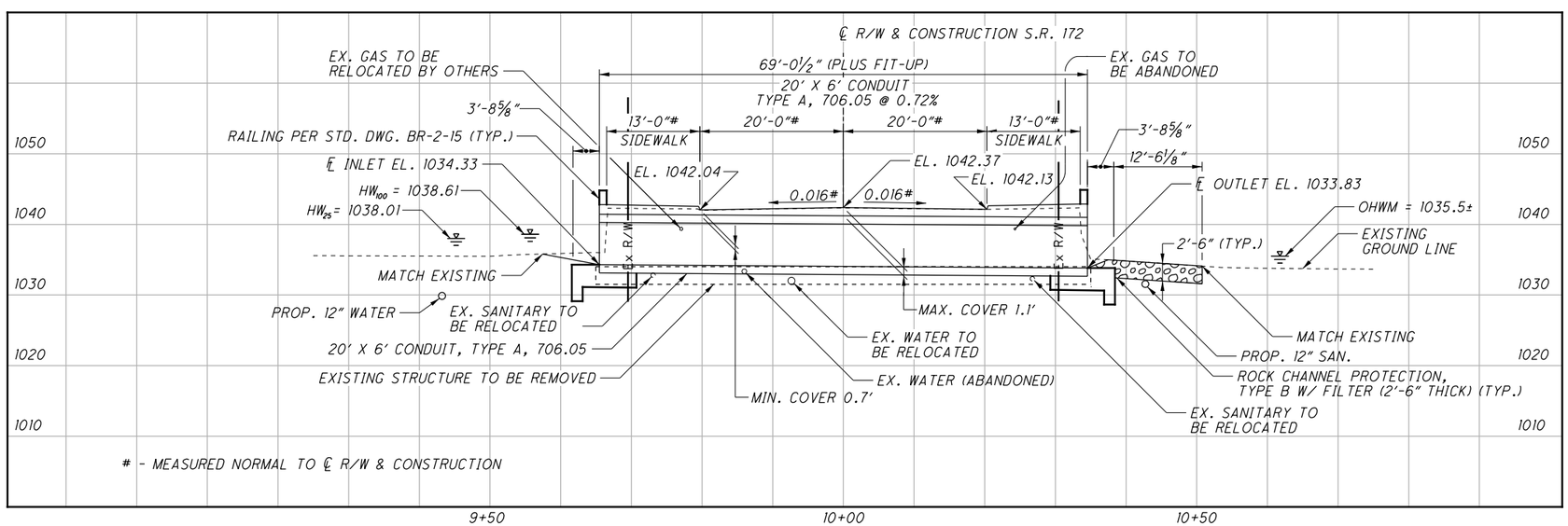

PROFILE ALONG ⅊ CULVERT

BENCHMARK DATA

BM #1 STA. 220+39.9, EL. 1042.57, OFFSET 26.4' RT.
BM #2 STA. 220+57.4, EL. 1042.28, OFFSET 31.7' LT.

FOR ADDITIONAL BENCHMARK INFORMATION. SEE ROADWAY PLAN SHEET 21/51

NOTES

EARTHWORK LIMITS SHOWN ARE APPROXIMATE. ACTUAL SLOPES SHALL CONFORM TO PLAN CROSS SECTIONS.

DESIGN TRAFFIC:
2018 ADT = 11000 2018 ADTT = 990
2038 ADT = 12000 2038 ADTT = 1080
DIRECTIONAL DISTRIBUTION = 0.51

LEGEND

⊕ BENCHMARK LOCATION

ROCK CHANNEL PROTECTION, TYPE B W/ FILTER (2'-6" THICK)

HYDRAULIC DATA

DRAINAGE AREA = 1.27 SQ. MILES
Q (25) = 284 CFS V (25) = 6.46 FT/S
Q (100) = 376 CFS V (100) = 7.41 FT/S
HW_{25} = 1038.01 HW_{100} = 1038.61
pH = 6.8 DESIGN SERVICE LIFE = 75 YEARS
ABRASIVE = YES OHWM = 1035.5±
STRUCTURE CLEARS THE 25 YEAR DESIGN HW BY 1.82 FEET.

EXISTING STRUCTURE

TYPE: SINGLE SPAN CONCRETE SLAB ON CONCRETE WALL ABUTMENTS
SPAN: 19'-6"± F/F WALLS
ROADWAY: 40'-0"± TOE/TOE CURB
LOADING: UNKNOWN
SKEW: 10°± L.F.
APPROACH SLABS: 15'±
ALIGNMENT: TANGENT
CROWN: 0.016±
STRUCTURAL FILE NUMBER: 7600720
DATE BUILT: 1950
DISPOSITION: TO BE REMOVED AND REPLACED

PROPOSED STRUCTURE

TYPE: 20' X 6' PRECAST REINFORCED CONCRETE BOX CULVERT TYPE A, 706.05
LENGTH: 69'-0½"
ROADWAY: 40'-0" TOE/TOE CURB
LOADING: HL-93 WITH FUTURE WEARING SURFACE (FWS) OF 0.060 KIPS/SQ. FT.
SKEW: 10°00'00" L.F.
WEARING SURFACE: ASPHALT CONCRETE
ALIGNMENT: TANGENT
CROWN: 0.016 FT/FT
STRUCTURAL FILE NUMBER: 7600721
COORDINATES: LATITUDE 40°47'46.15" N
LONGITUDE 81°34'07.66" W

DESIGN AGENCY
CARPENTER MARTY transportation
6612 SINGLETREE DR. COLUMBUS, OH 43229
ENGINEERS • CONSULTANTS

DESIGNED	DRAWN	REVIEWED	DATE
AMR	AMR	GDJ	7-18-17
CHECKED	REVISED	STRUCTURE FILE NUMBER	
STK		7600721	

STRUCTURE SITE PLAN
BRIDGE NO. STA-172-0420
OVER BRANCH OF NEWMAN CREEK

STA-21-4.46
STA-172-4.20
PID No. 95369

P:\ODT\04\0009_04-7_STA-21_172-4.46_4.20\95369_STA-21_172-4.46\Design\Structures\STA172_0420C\Sheets\172_0420C_SP001.dgn Sheet 8/11/2017 9:36:04 AM CMT008

REFER TO THE FOLLOWING STANDARD BRIDGE DRAWING:

BR-2-15 DATED 7-17-15

AND TO THE FOLLOWING SUPPLEMENTAL SPECIFICATION:

940 DATED 4-17-15

DESIGN SPECIFICATIONS:

THIS STRUCTURE CONFORMS TO THE "LRFD BRIDGE DESIGN SPECIFICATIONS" ADOPTED BY THE AMERICAN ASSOCIATION OF STATE HIGHWAY AND TRANSPORTATION OFFICIALS, 2014, INCLUDING THE 2015 AND 2016 INTERIM SPECIFICATIONS AND THE ODOT BRIDGE DESIGN MANUAL, 2007.

DESIGN DATA: THE FOLLOWING DESIGN DATA IS ASSUMED:

INTERNAL ANGLE OF FRICTION OF BACKFILL SOIL, ϕ_{bf} = 30°
TOTAL UNIT WEIGHT OF BACKFILL SOIL = 120 PCF
INTERNAL ANGLE OF FRICTION (DRAINED), FOUNDATION SOIL, ϕ_f = 28°
UNDRAINED SHEAR STRENGTH (COHESIVE), FOUNDATION SOIL, S_{uf} = 1500 PSF
UNIT WEIGHT OF CONCRETE = 150 PCF
SLOPE OF BACKFILL = 2:1

CONCRETE CLASS QC1 - COMPRESSIVE STRENGTH 4000 PSI (FOOTING, WINGWALL)

CONCRETE CLASS QC2 - COMPRESSIVE STRENGTH 4500 PSI (SIDEWALK, RAILING)

REINFORCING STEEL - ASTM A615, A616, OR A617 GRADE 60 MINIMUM YIELD STRENGTH 60,000 PSI (EPOXY COATED)

SIDEWALK ANCHOR DOWELS:

ANCHOR PER CMS 510 WITH NONSHRINK, NONMETALLIC GROUT CONFORMING TO CMS 705.20 AND TO A DEPTH OF 11". PAYMENT FOR DOWEL HOLES, GROUT AND INSTALLATION SHALL BE INCLUDED WITH ITEM 511.

THREADED INSERTS OR NON-PROTRUDING MECHANICAL CONNECTORS CAPABLE OF DEVELOPING AT LEAST 125 PERCENT OF THE SPECIFIED YIELD STRENGTH OF THE REINFORCEMENT SHOWN ARE AN ACCEPTABLE ALTERNATIVE TO RESIN BONDING. MAINTAIN A MINIMUM COVER OF 3 INCHES AT THE BOTTOM OF THE CULVERT SLAB. MECHANICAL CONNECTORS SHALL HAVE AN "L-SHAPED" BAR INSIDE THE CULVERT WITH A MINIMUM HORIZONTAL LENGTH OF 12 INCHES. THE DEPARTMENT WILL CONSIDER PAYMENT FOR INSERTS OR MECHANICAL CONNECTORS AS INCIDENTAL TO ITEM 611, 20' X 6' CONDUIT, TYPE A, 706.05, AS PER PLAN.

PREFORMED EXPANSION JOINT FILLER:

PREFORMED EXPANSION JOINT FILLER (PEJF) CONFORMING TO CMS 705.03, 1 INCH THICK, SHALL BE PLACED ABOVE THE FOOTING BETWEEN THE SIDES OF THE BOX CULVERT AND THE ENDS OF THE WINGWALLS. PAYMENT FOR MATERIALS AND INSTALLATION SHALL BE INCLUDED WITH ITEM 516, 1" PREFORMED EXPANSION JOINT FILLER.

SEALING OF CONCRETE SURFACES:

ALL EXPOSED RAILING AND WINGWALL CONCRETE SHALL BE SEALED WITH EPOXY-URETHANE SEALER. ALL EXPOSED SIDEWALK CONCRETE SHALL BE SEALED WITH NON-EPOXY SEALER. THE EPOXY URETHANE SEALER LIMITS SHALL BE AS SHOWN IN THE DIAGRAMS BELOW.

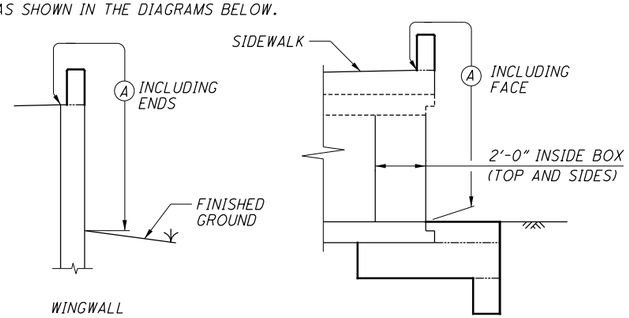

WINGWALL

RAILING, SIDEWALK AND PRECAST BOX (CULVERT OUTLET BEVEL SHOWN)

(A) - SEAL CONCRETE SURFACE AREA (EPOXY-URETHANE)

UNSUITABLE SOILS

THE FOLLOWING ITEMS ARE TO BE USED AS DIRECTED BY THE ENGINEER TO ADDRESS UNSUITABLE SOILS ENCOUNTERED IN THE AREA UNDER THE PROPOSED BOX CULVERT.
ITEM 203 - EXCAVATION 88 CU YD
ITEM 203 - GRANULAR MATERIAL, TYPE C (703.16), 88 CU YD
ITEM 204 - GEOTEXTILE FABRIC, TYPE D, 176 SQ YD

ITEM 511 WINGWALLS FOR 611 ITEMS:

FOR ITEM 706.05 WITH A CAST-IN-PLACE WINGWALL A PRECAST ALTERNATIVE MAY BE FURNISHED PER 602.03. THE PRECAST ALTERNATIVE WILL MEET THE CAST-IN-PLACE STRUCTURAL DESIGN LOADINGS, DESIGN HEIGHT, AND DESIGN LENGTH DIMENSIONS.

FULL COMPENSATION FOR THE PRECAST WINGWALL IS THE NUMBER OF CUBIC YARDS OF ITEM 511 AND POUNDS OF ITEM 509 FOR THE CORRESPONDING CAST-IN-PLACE STRUCTURE.

WATERPROOFING:

TYPE 2 WATERPROOFING, PER CMS 512.08 AND 711.25, SHALL EXTEND VERTICALLY DOWN THE ENTIRE SIDES OF THE PRECAST CULVERT SECTION FOR ALL PORTIONS OF THE CULVERT WHICH SHALL BE IN CONTACT WITH THE BACKFILL. PAYMENT FOR THE MEMBRANE WATERPROOFING SHALL BE AT THE CONTRACT PRICE BID PER SQUARE YARD FOR ITEM 512, TYPE 2 WATERPROOFING.

TYPE 3 WATERPROOFING, PER CMS 512.08 AND 711.29 SHALL BE APPLIED TO THE TOP SURFACE OF THE PRECAST CULVERT SECTIONS FROM TOE TO TOE OF THE CURBS, AND SHALL EXTEND ONE FOOT VERTICALLY DOWN THE SIDES FOR ALL PORTIONS OF THE CULVERT WHICH SHALL BE IN CONTACT WITH THE BACKFILL. PAYMENT FOR THE MEMBRANE WATERPROOFING SHALL BE AT THE CONTRACT PRICE BID PER SQUARE YARD FOR ITEM 512, TYPE 3 WATERPROOFING.

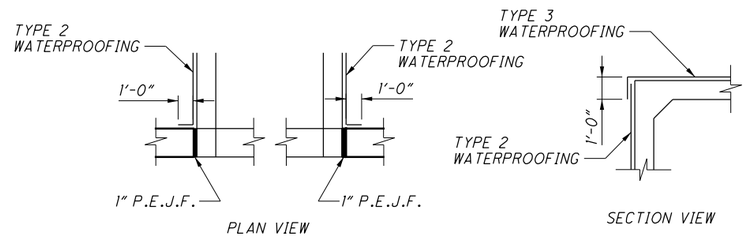

PLAN VIEW

SECTION VIEW

POROUS BACKFILL:

POROUS BACKFILL WITH GEOTEXTILE FABRIC 2'-0" THICK SHALL BE PLACED BEHIND THE WINGWALLS ONLY AND SHALL EXTEND TO 12" BELOW THE EMBANKMENT SURFACE. GEOTEXTILE FABRIC SHALL BE PLACED BETWEEN THE POROUS BACKFILL AND REPLACED EXCAVATION ADJACENT TO THE STRUCTURE. IT SHALL TURN UNDER THE BOTTOM OF THE POROUS BACKFILL AND RETURN 6" ABOVE THE TOP ELEVATION OF THE WEEPHOLE. WEEPHOLES SHALL BE PLACED 6" TO 12" ABOVE THE NORMAL WATER ELEVATION OR GROUND LINE AND SHALL HAVE A MAXIMUM SPACING OF 10'-0". A MINIMUM OF ONE WEEPHOLE SHALL BE PROVIDED PER WINGWALL.

ASBESTOS NOTIFICATION:

AN ASBESTOS SURVEY OF BRIDGE STRUCTURE NO. STA-172-0420 (SFN 7600720) SCHEDULED FOR REPLACEMENT WAS CONDUCTED BY A CERTIFIED ASBESTOS HAZARD EVALUATION SPECIALIST. THE SURVEY DETERMINED THAT NO ASBESTOS IS PRESENT ON THE BRIDGE STRUCTURE.

A COPY OF THE ASBESTOS INSPECTION REPORT WILL BE PROVIDED TO THE SUCCESSFUL BIDDER. THE CONTRACTOR SHALL COMPLETE AND SIGN AN OHIO ENVIRONMENTAL PROTECTION AGENCY (OEPA) NOTIFICATION OF DEMOLITION AND RENOVATION FORM (FORM REVISED APRIL 2015) FOR THE BRIDGE AND SUBMIT IT TO:

TERRI DZIENIS, ADMINISTRATOR
DIVISION OF AIR POLLUTION CONTROL
420 MARKET AVENUE N.
CANTON, OH 44702-1544
ATTN: JACLYN HUPP
(330) 489-3385

AT LEAST TEN (10) WORKING DAYS PRIOR TO THE START OF ANY DEMOLITION AND/OR REHABILITATION.

SUBMISSION OF AN INCORRECT VERSION OF THE OEPA FORM MAY BE REJECTED BY THE DIVISION OF AIR POLLUTION CONTROL. SEE:
http://epa.ohio.gov/Portals/27/atu/asbestos/DemolitionNotificationForm.pdf
FOR THE MOST CURRENT VERSION OF THE OEPA FORM.

THE CONTRACTOR SHALL PROVIDE A COPY OF THE COMPLETED AND SIGNED FORM TO THE ENGINEER. INFORMATION REQUIRED ON THE FORM WILL INCLUDE: 1) THE CONTRACTORS NAME AND ADDRESS, 2) THE SCHEDULED DATES FOR THE START AND COMPLETION OF THE BRIDGE REMOVAL AND 3) A DESCRIPTION OF THE PLANNED DEMOLITION WORK AND THE METHOD(S) TO BE USED. A COPY OF THE ASBESTOS INSPECTION REPORT IS AVAILABLE FOR INSPECTION AT THE ODOT DISTRICT 4 OFFICE, 2088 SOUTH ARLINGTON, AKRON, OHIO 44306.

BASIS FOR PAYMENT - THE CONTRACTOR SHALL FURNISH ALL FEES, LABOR, AND MATERIAL NECESSARY TO COMPLETE AND SUBMIT THE OEPA NOTIFICATION OF DEMOLITION AND RENOVATION FORM. PAYMENT FOR THIS WORK SHALL BE INCLUDED IN ITEM 202, STRUCTURE REMOVED, AS PER PLAN.

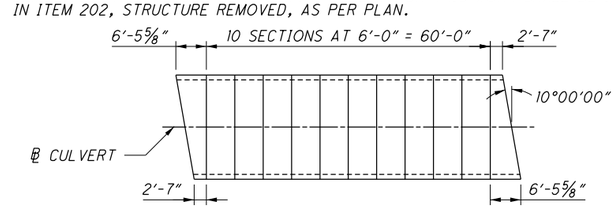

SUGGESTED CULVERT SEGMENT PLAN

ESTIMATED QUANTITIES — DESIGNED: AMR DATE: 7-11-17 — CHECKED: STK DATE: 7-11-17

ITEM	EXTENSION	TOTAL 01/NHS/BR	UNIT	DESCRIPTION	SEE SHEET
202	11001	-	LS	STRUCTURE REMOVED, AS PER PLAN	2
202	22900	187	SY	APPROACH SLAB REMOVED	
202	23500	229	SY	WEARING COURSE REMOVED	
203	10000	88	CY	EXCAVATION	
203	35120	88	CY	GRANULAR MATERIAL, TYPE C	
204	50000	176	SY	GEOTEXTILE FABRIC	
503	11100	-	LS	COFFERDAMS AND EXCAVATION BRACING	
503	21300	-	LS	UNCLASSIFIED EXCAVATION	
509	10000	14289	LB	EPOXY COATED REINFORCING STEEL	
511	46010	42	CY	CLASS QC1 CONCRETE, RETAINING/WINGWALL NOT INCLUDING FOOTING	
511	46510	102	CY	CLASS QC1 CONCRETE, FOOTING	
511	51510	36	CY	CLASS QC2 CONCRETE, SIDEWALK	
512	10050	67	SY	SEALING OF CONCRETE SURFACES (NON-EPOXY)	
512	10100	142	SY	SEALING OF CONCRETE SURFACES (EPOXY-URETHANE)	
512	33000	127	SY	TYPE 2 WATERPROOFING	
512	33010	109	SY	TYPE 3 WATERPROOFING	
516	13600	68	SF	1" PREFORMED EXPANSION JOINT FILLER	
517	75120	120	FT	RAILING (CONCRETE PARAPET WITH TWIN STEEL TUBE RAILING)	
518	21200	20	CY	POROUS BACKFILL WITH GEOTEXTILE FABRIC	
611	96497	70	FT	20' X 6' CONDUIT, TYPE A, 706.05, AS PER PLAN (DESIGN COVER <= 2')	8

DESIGN AGENCY
CARPENTER MARTY transportation
6612 SINGLETREE DR. COLUMBUS, OH 43229
614.885.4500 FAX - 885.4505

DESIGNED	DRAWN	REVIEWED	DATE
AMR	AMR	GDJ	7-18-17
CHECKED	REVISED	STRUCTURE FILE NUMBER	
STK		7600721	

GENERAL NOTES & ESTIMATED QUANTITIES
BRIDGE NO. STA-172-0420
OVER BRANCH OF NEWMAN CREEK

STA-21-4.46
STA-172-4.20
PID No. 95369

P:\ODOT\04\0009_04-7_STA-21.172-4.46_4.20\95369_STA-21.172-4.46\Design\Structures\STA172_0420\STA172_0420C_SN001.dgn Sheet 8/11/2017 9:36:05 AM CMT008

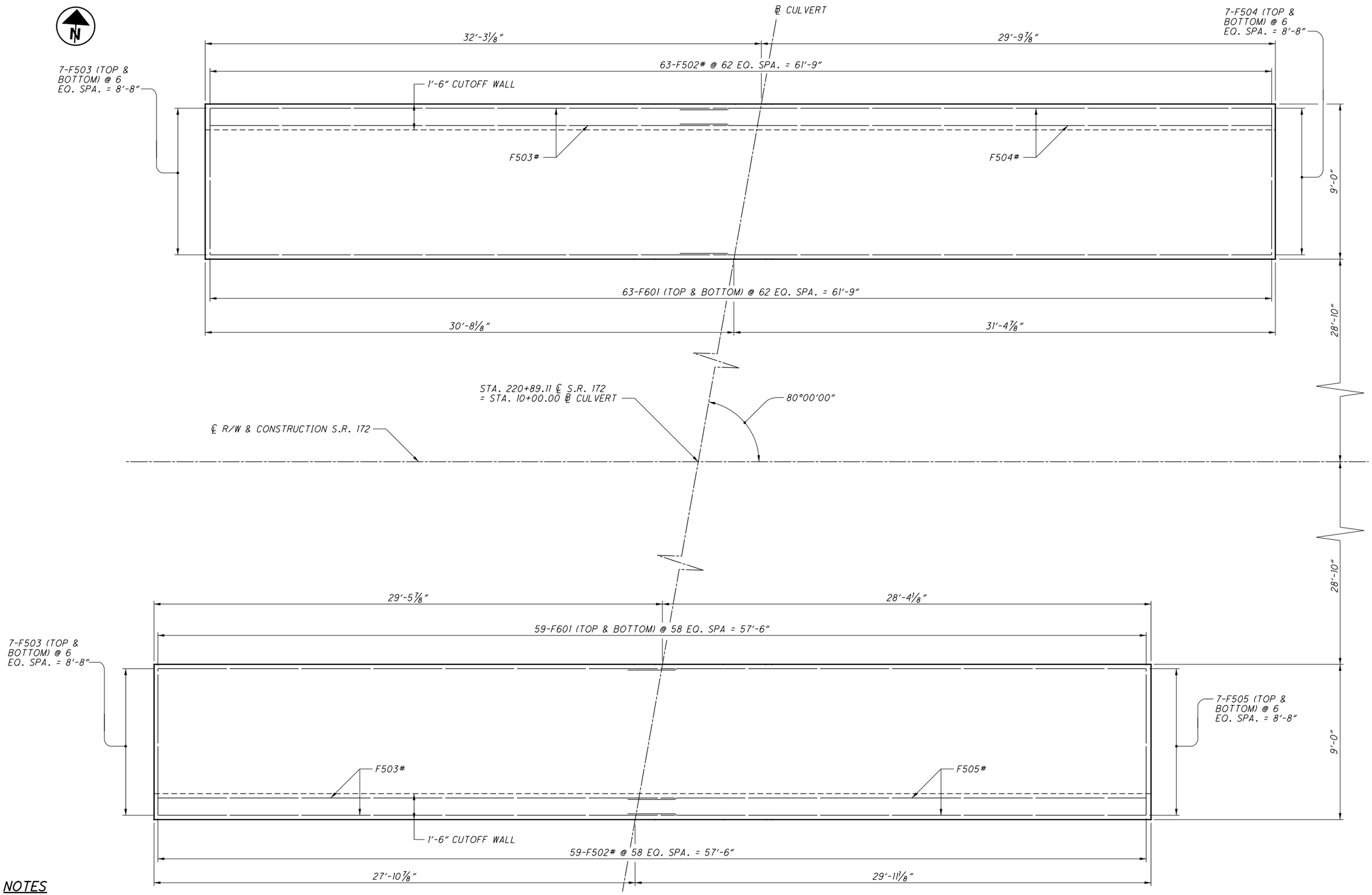

NOTES

1. SEE SHEET 5/8 FOR ADDITIONAL FOOTING DETAILS.
2. MINIMUM LAP SPLICE LENGTH:
   #5 BAR = 33 INCHES

FOUNDATION PLAN

LEGEND

- PLACED IN CUTOFF WALL

DESIGN AGENCY
CARPENTER MARTY transportation
6612 SINGLETREE DR. COLUMBUS, OH 43229
ARCHITECTS · ENGINEERS

DESIGNED AMR	DRAWN AMR	REVIEWED GDJ	DATE 7-18-17
CHECKED STK	REVISED	STRUCTURE FILE NUMBER 7600721	

FOUNDATION PLAN
BRIDGE NO. STA-172-0420
OVER BRANCH OF NEWMAN CREEK

STA-21-4.46
STA-172-4.20
PID No. 95369

P:\ODT\04\0009_04-7_STA-21_172-4.46_4.20\95369_STA-21_172-4.46\Design\Structures\STA172_0420C\Sheets\172_0420C_S0001.dgn Sheet 8/11/2017 9:36:05 AM CMT008

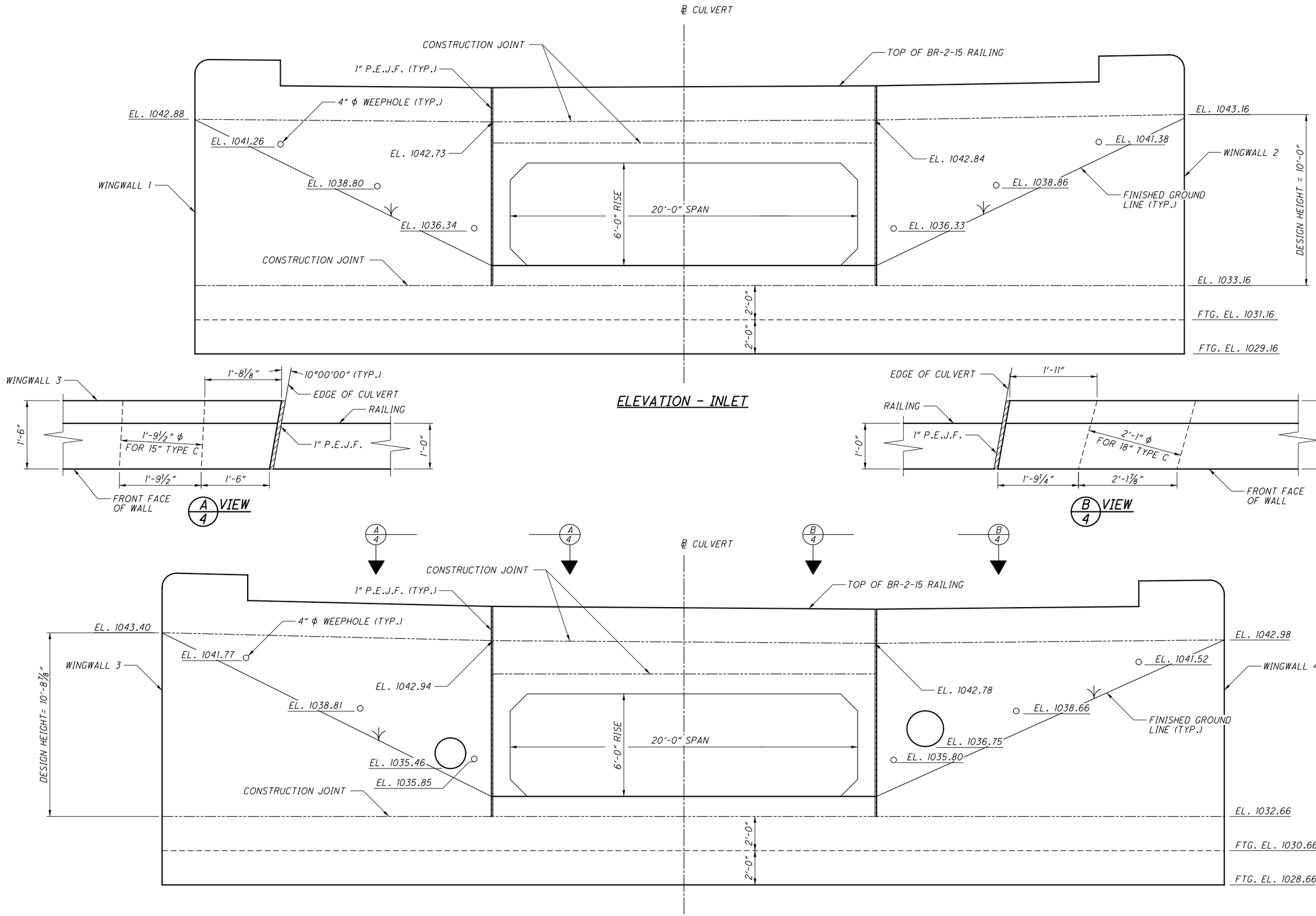

DESIGN AGENCY
CARPENTER MARTY transportation
6812 SHIER RINGS DR. COLUMBUS, OH 43229
ARCHITECTS · ENGINEERS

DESIGNED	DRAWN	REVIEWED	DATE
AMR	AMR	GDJ	7-18-17
CHECKED	REVISED	STRUCTURE FILE NUMBER	
STK		7600721	

CULVERT ELEVATIONS
BRIDGE NO. STA-172-0420
OVER BRANCH OF NEWMAN CREEK

STA-21-4.46
STA-172-4.20
PID No. 95369

P:\ODOT\04\0009_04-7_STA-21.172-4.46_4.20\95369_STA-21.172-4.46\Design\Structures\STA172_0420C\Sheets\172_0420C_SW001.dgn Sheet 8/11/2017 9:36:06 AM CMT008

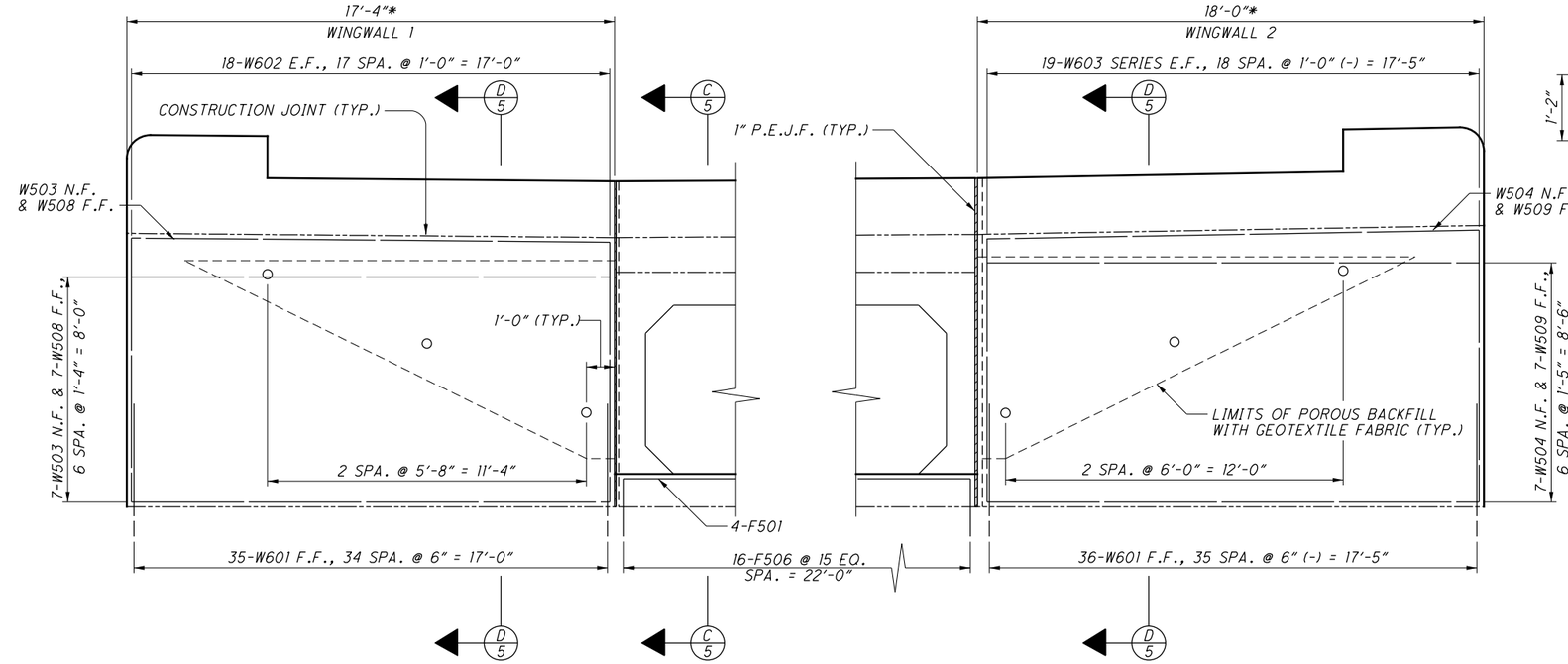

ELEVATION WW1 & WW2

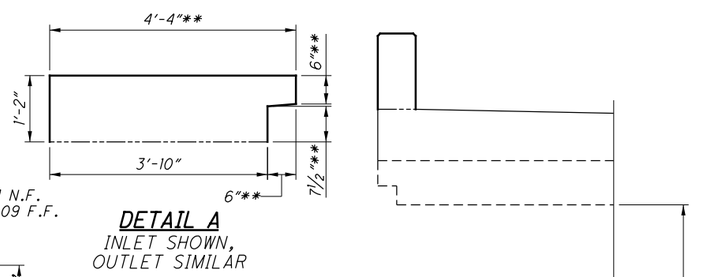

DETAIL A

INLET SHOWN,
OUTLET SIMILAR

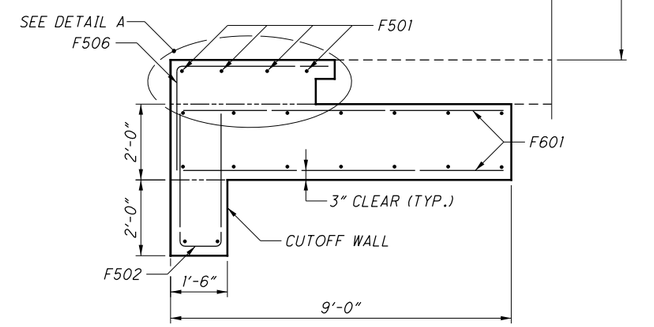

C/5 SECTION

BARS NOT LABELED ARE F503, F504 OR F505

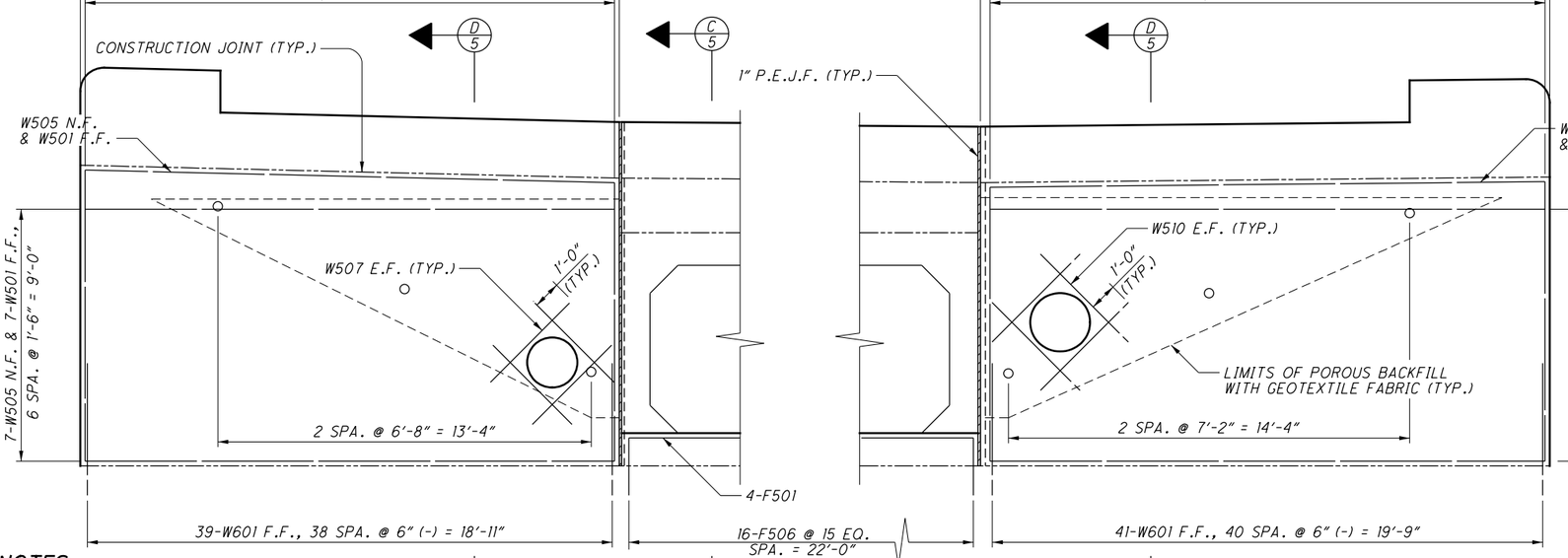

ELEVATION WW3 & WW4

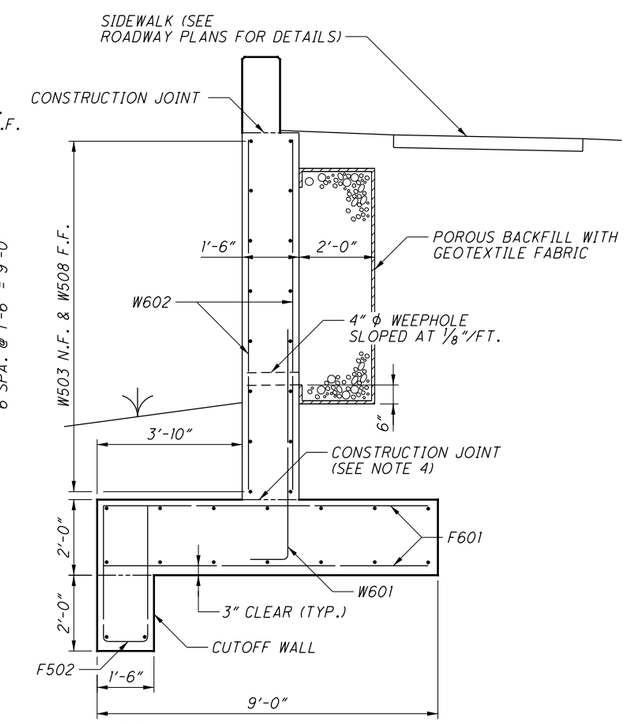

D/5 SECTION

WW1 SHOWN, OTHERS SIMILAR
BARS NOT LABELED ARE F503

NOTES

1. SEE SHEET 7/8 FOR RAILING DETAILS.
2. SEE SHEET 6/8 FOR SIDEWALK DETAILS.
3. ADJUST REINFORCEMENT AS NECESSARY TO AVOID INTERFERENCE WITH WEEPHOLES.
4. THE INTERFACE BETWEEN THE TOP OF THE FOOTING AND THE BASE OF THE WINGWALL STEM SHALL BE INTENTIONALLY ROUGHENED TO A FULL AMPLITUDE OF APPROXIMATELY ¼" BY MEANS OF A SERRATED TROWEL.
5. THE CONTRACTOR SHALL FIELD TRIM REINFORCING BARS AS NECESSARY AT PIPE OPENINGS IN WW3 AND WW4. COST SHALL BE INCLUDED WITH ITEM 509, EPOXY COATED REINFORCING STEEL.

LEGEND

E.F. - EACH FACE

F.F. - FAR FACE

N.F. - NEAR FACE

* - MEASURED ALONG OUTSIDE FACE OF WINGWALL

** - VERIFY WITH MANUFACTURER PRIOR TO CONSTRUCTION

DESIGN AGENCY
CARPENTER MARTY transportation
6612 SINGLETREE DR. COLUMBUS, OH 43229
ENGINEERS • CONTRACTORS

DESIGNED	DRAWN	REVIEWED	DATE
AMR	AMR	GDJ	7-18-17
CHECKED	REVISED	STRUCTURE FILE NUMBER	
STK		7600721	

WINGWALL DETAILS
BRIDGE NO. STA-172-0420
OVER BRANCH OF NEWMAN CREEK

STA-21-4.46
STA-172-4.20
PID No. 95369

P:\ODOT\04\0009_04-7_STA-21_172-4.46_4.20\95369_STA-21_172-4.46\Design\Structures\STA172_0420C\Sheets\172_0420C_SW002.dgn Sheet 8/11/2017 9:36:07 AM CMT008

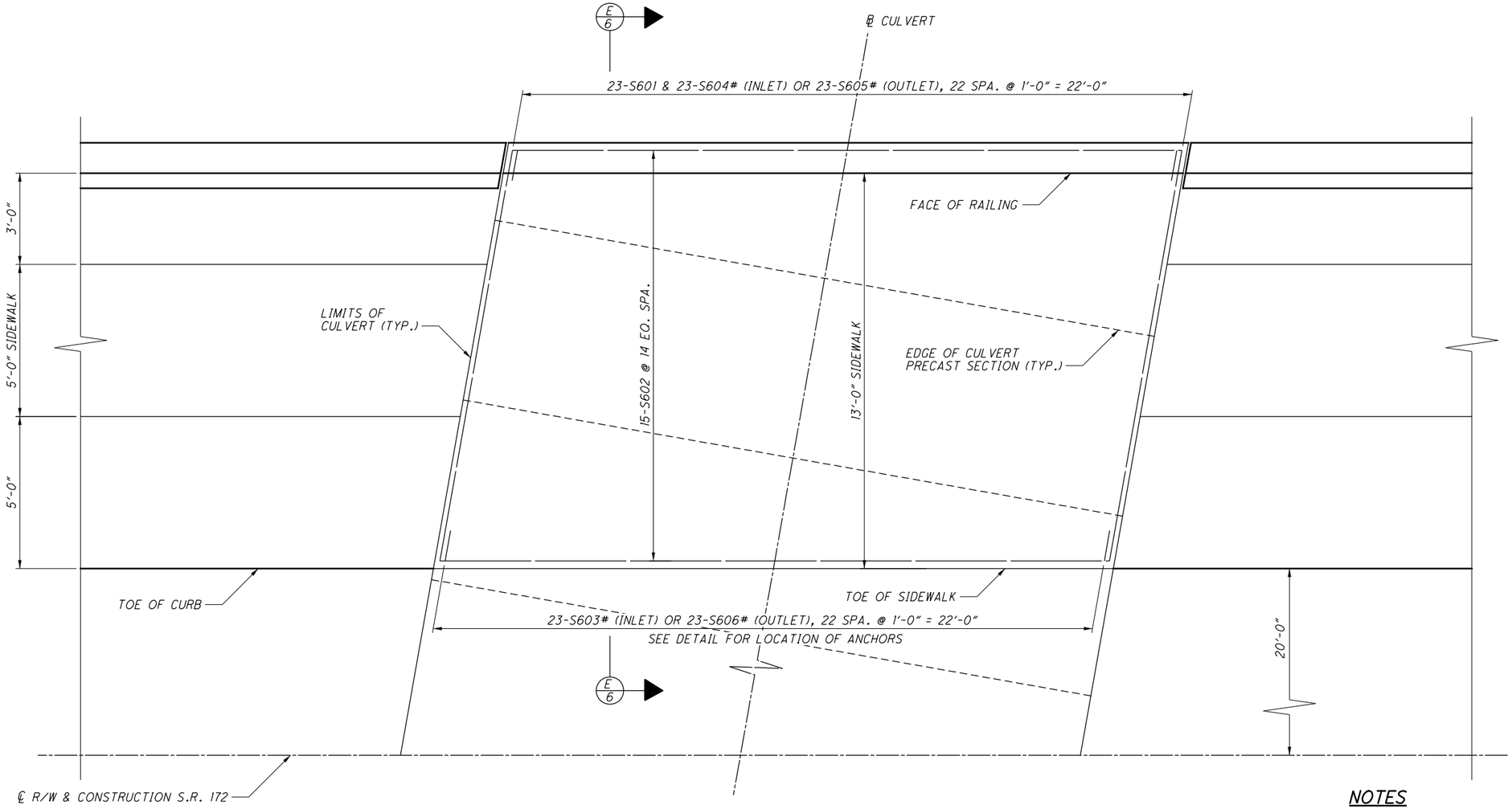

SIDEWALK REINFORCING PLAN

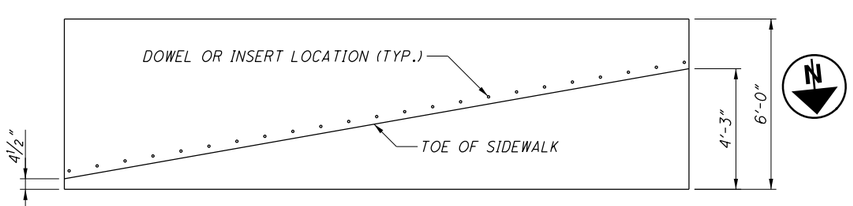

CULVERT SEGMENT (NEAR INLET SIDEWALK)

(SEE NOTE 3)

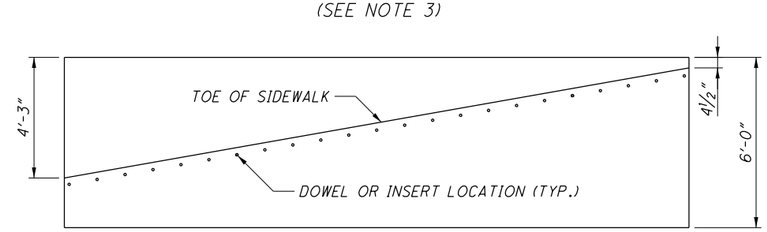

CULVERT SEGMENT (NEAR OUTLET SIDEWALK)

(SEE NOTE 3)

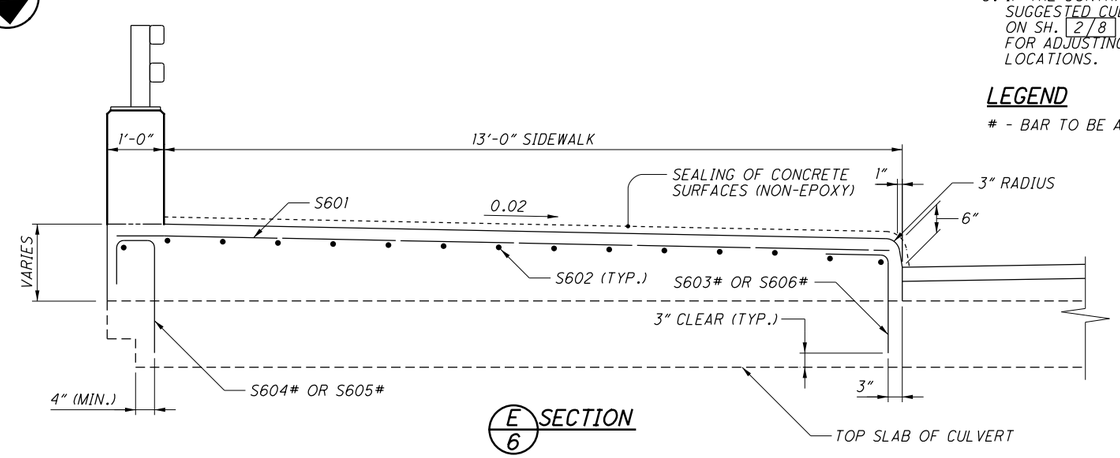

E/6 SECTION

NOTES

1. SEE SHEET 7/8 FOR RAILING DETAILS.
2. SEE ROADWAY PLANS FOR SIDEWALK DETAILS BEYOND CULVERT LIMITS.
3. IF THE CONTRACTOR CHOOSES TO MODIFY THE SUGGESTED CULVERT SEGMENT PLAN AS SHOWN ON SH. 2/8, THEY SHALL BE RESPONSIBLE FOR ADJUSTING THE SIDEWALK DOWEL OR INSERT LOCATIONS.

LEGEND

- BAR TO BE ANCHORED INTO TOP SLAB OF CULVERT

DESIGN AGENCY
CARPENTER MARTY transportation
6612 SINGLETREE DR. COLUMBUS, OH 43229
ARCHITECTS · ENGINEERS

DESIGNED	DRAWN	REVIEWED	DATE
AMR	AMR	GDJ	7-18-17
CHECKED	REVISED	STRUCTURE FILE NUMBER	
STK		7600721	

SIDEWALK DETAILS
BRIDGE NO. STA-172-0420
OVER BRANCH OF NEWMAN CREEK

STA-21-4.46
STA-172-4.20
PID No. 95369

P:\ODT\04\0009_04-7_STA-21.172-4.46_4.20\95369_STA-21.172-4.46\Design\Structures\STA172_0420C\Sheets\172_0420C_SM003.dgn Sheet 8/11/2017 9:36:08 AM CMT008

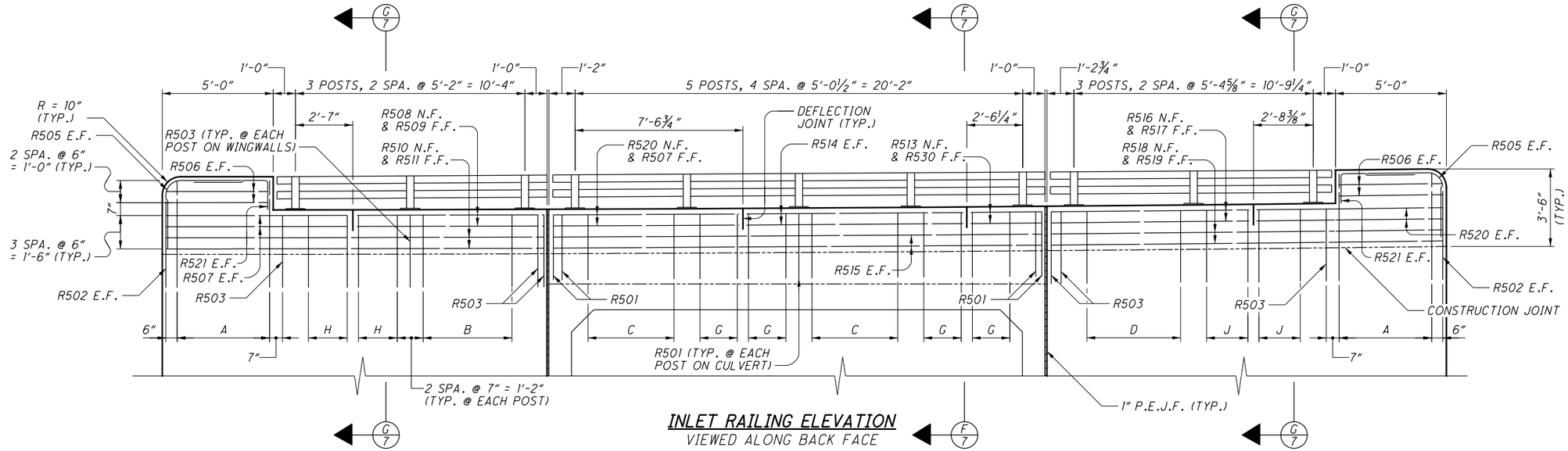

INLET RAILING ELEVATION

VIEWED ALONG BACK FACE

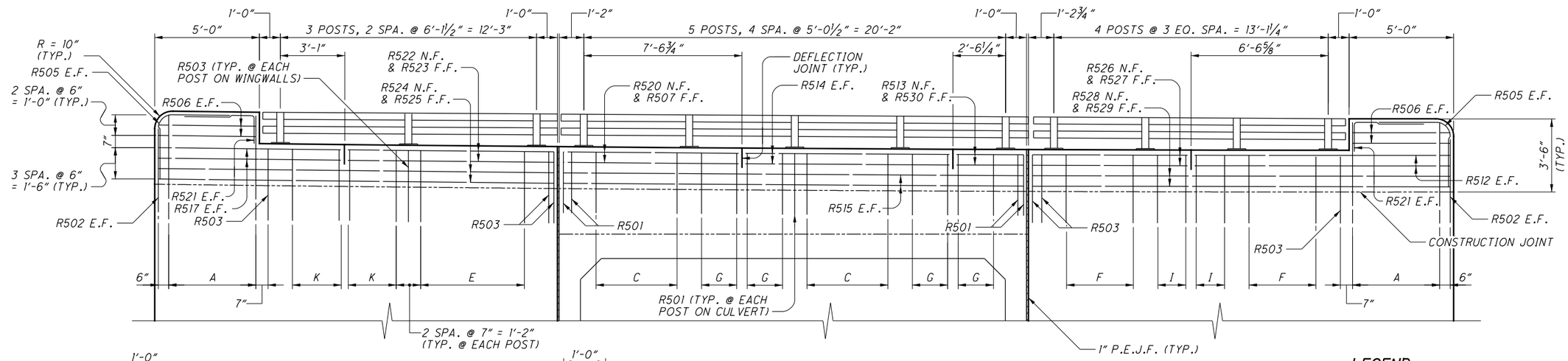

OUTLET RAILING ELEVATION

VIEWED ALONG BACK FACE

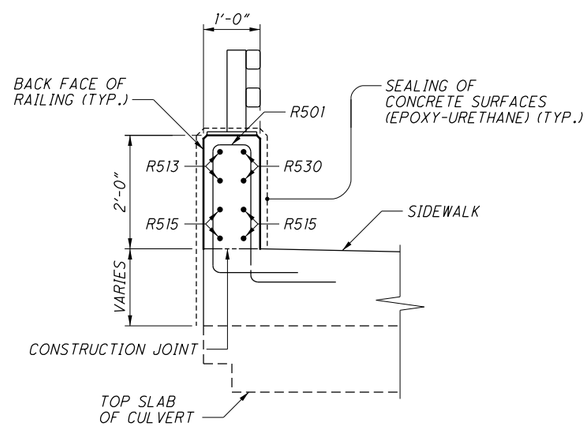

F/7 SECTION

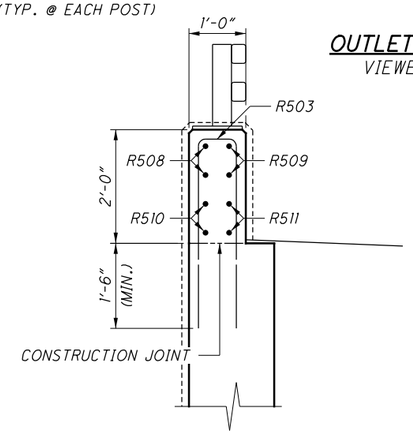

G/7 SECTION

WW1 SHOWN, OTHERS SIMILAR

NOTES

1. REFER TO STD. DWG. BR-2-15 FOR ADDITIONAL NOTES AND DETAILS.
2. PAYMENT FOR BR-2-15 REINFORCING STEEL TO BE INCLUDED WITH ITEM 517, RAILING (CONCRETE PARAPET WITH TWIN STEEL TUBE RAILING)

LEGEND

E.F. - EACH FACE

F.F. - FAR FACE

N.F. - NEAR FACE

A - 11-R504, 10 SPA. @ 5" = 4'-2"

B - 5-R503, 4 SPA. @ 1'-0" = 4'-0"

C - 5-R501 @ 4 EQ. SPA. = 3'-10½"

D - 6-R503 @ 5 EQ. SPA. = 4'-2⅝"

E - 6-R503 @ 5 EQ. SPA. = 4'-11½"

F - 5-R503 @ 4 EQ. SPA. = 3'-2¼"

G - 3-R501 @ 2 EQ. SPA. = 1'-8¼"

H - 3-R503 @ 2 EQ. SPA. = 1'-9"

I - 3-R503 @ 2 EQ. SPA. = 1'-4¼"

J - 3-R503 @ 2 EQ. SPA. = 1'-10⅜"

K - 3-R503 @ 3 EQ. SPA. = 2'-2¾"

DESIGN AGENCY
CARPENTER MARTY transportation
6612 SINGLETREE DR. COLUMBUS, OH 43229
ENGINEERS • CONTRACTORS

DESIGNED	REVIEWED	DATE
AMR	GDJ	7-18-17
DRAWN	REVISED	STRUCTURE FILE NUMBER
AMR		7600721
CHECKED		
STK		

RAILING DETAILS

BRIDGE NO. STA-172-0420

OVER BRANCH OF NEWMAN CREEK

STA-21-4.46
STA-172-4.20
PID No. 95369

P:\ODT\04\0009_04-7_STA-21.172-4.46_4.20\95369_STA-21.172-4.46\Design\Structures\STA172_0420C\Sheets\172_0420C_SA001.dgn Sheet 8/11/2017 9:36:09 AM CMT008

MARK	NUMBER	LENGTH	WEIGHT	TYPE	DIMENSIONS		
					A	B	C
FOOTINGS AND CUTOFF WALLS							
F501	8	22'-0"	184	STR			
F502	122	8'-1"	1029	2	3'-7"	1'-2"	3'-7"
F503	32	30'-0"	1002	STR			
F504	16	34'-6"	576	STR			
F505	16	30'-3"	505	STR			
F506	32	6'-5"	215	1	2'-9"	3'-10"	
F601	244	8'-8"	3177	STR			
SUB-TOTAL			6688				

MARK	NUMBER	LENGTH	WEIGHT	TYPE	DIMENSIONS		
					A	B	C
SIDEWALK							
S601	46	13'-9"	951	STR			
S602	30	22'-0"	992	STR			
S603#	23	2'-8"	93	1	1'-0"	1'-10"	
S604#	23	3'-5"	119	2	1'-0"	8"	2'-0"
S605#	23	4'-4"	150	2	1'-5"	8"	2'-6"
S606#	23	3'-1"	107	1	1'-0"	2'-3"	
SUB-TOTAL			2412				

LEGEND

- LENGTH ACCOUNTS FOR 11" EMBEDMENT INTO CULVERT

MARK	NUMBER	LENGTH	WEIGHT	TYPE	DIMENSIONS		
					A	B	INC
WINGWALLS							
W501	8	19'-1"	160	STR			
W502	8	19'-9"	165	STR			
W503	8	17'-0"	142	STR			
W504	8	17'-7"	147	STR			
W505	8	18'-11"	158	STR			
W506	8	19'-11"	167	STR			
W507	8	4'-2"	35	STR			
W508	8	17'-2"	144	STR			
W509	8	17'-5"	146	STR			
W510	8	4'-6"	38	STR			
W601	151	7'-1"	1607	1	1'-0"	6'-3"	
W602	36	9'-4"	505	STR			
W603	2 SERIES OF 19	9'-4" TO 9'-8"	543	STR			1/4" (-)
W604	2 SERIES OF 20	9'-11" TO 10'-5"	611	STR			3/8" (-)
W605	42	9'-10"	621	STR			
SUB-TOTAL			5189				

NOTES

1. THE BAR SIZE NUMBER IS SPECIFIED ON THE PLANS IN THE BAR MARK COLUMN. THE FIRST DIGIT WHERE THREE DIGITS ARE USED, AND THE FIRST TWO DIGITS WHERE FOUR DIGITS ARE USED, INDICATES THE BAR SIZE NUMBER. FOR EXAMPLE, F501 IS A NO. 5 BAR. BAR DIMENSIONS ARE OUT TO OUT UNLESS OTHERWISE INDICATED.
2. ALL REINFORCING STEEL TO BE EPOXY COATED.
3. BELOW ARE THE AREAS REQUIRED FOR THE REINFORCEMENT IN THE CULVERT:

As1 = 1.11 IN^2/FT
As2 = 1.06 IN^2/FT
As3 = 1.01 IN^2/FT
As4 = 0.29 IN^2/FT
As5 = 0.34 IN^2/FT
As6 = 0.34 IN^2/FT
As7 = 0.34 IN^2/FT
As8 = 0.29 IN^2/FT

MARK	NUMBER	LENGTH	WEIGHT	TYPE	DIMENSIONS			
					A	B	C	D
RAILING								
R501	62	7'-10"	507	30	1'-6"	8"	2'-5"	2'-3"
R502	8	3'-11"	33	STR				
R503	76	7'-1"	562	2	3'-4"	8"	3'-4"	
R504	44	10'-1"	463	2	4'-10"	8"	4'-10"	
R505	8	6'-1"	51	3	2'-11"	3'-5"		
R506	16	4'-8"	78	STR				
R507	8	8'-3"	69	STR				
R508	2	8'-5"	18	STR				
R509	2	8'-6"	18	STR				
R510	2	17'-0"	36	STR				
R511	2	17'-1"	36	STR				
R512	4	12'-2"	51	STR				
R513	4	3'-2"	14	STR				
R514	8	9'-9"	82	STR				
R515	8	22'-0"	184	STR				
R516	2	8'-10"	19	STR				
R517	6	8'-8"	55	STR				
R518	2	17'-7"	37	STR				
R519	2	17'-6"	37	STR				
R520	8	8'-4"	70	STR				
R521	8	4'-2"	35	1	10"	3'-5"		
R522	2	9'-10"	21	STR				
R523	2	9'-11"	21	STR				
R524	2	18'-11"	40	STR				
R525	2	19'-0"	40	STR				
R526	2	7'-5"	16	STR				
R527	2	7'-4"	16	STR				
R528	2	19'-11"	42	STR				
R529	2	19'-10"	42	STR				
R530	4	3'-3"	14	STR				
TOTAL			2707					

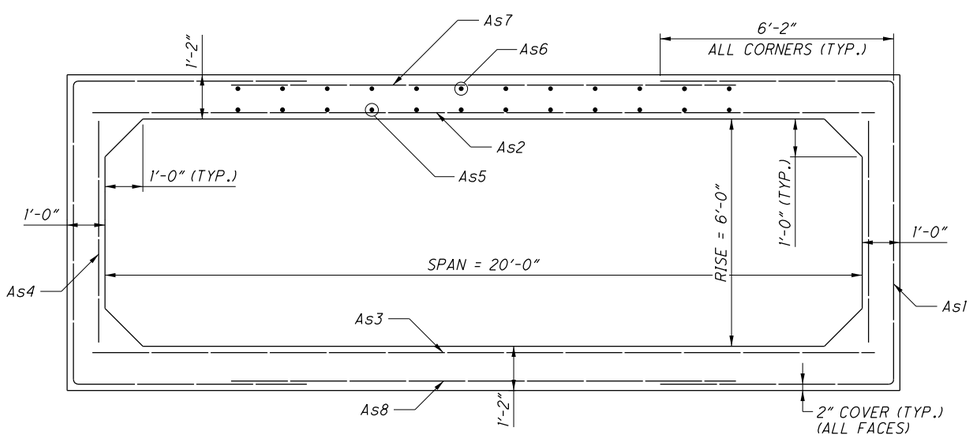

TYPICAL BOX CULVERT SECTION

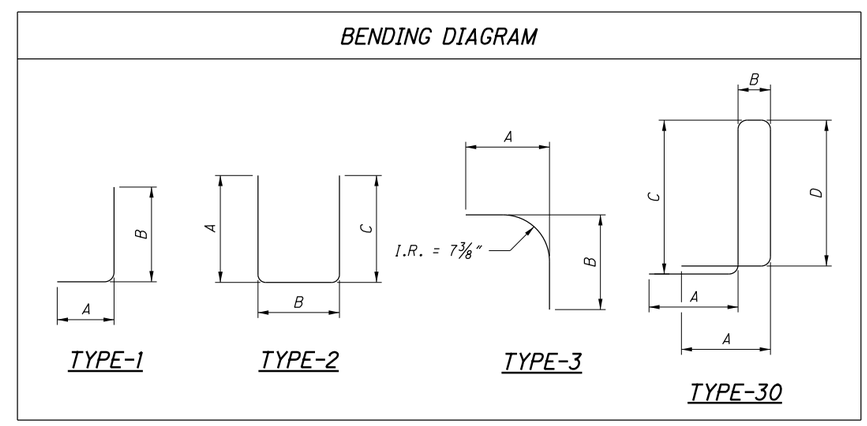

DESIGN AGENCY
CARPENTER MARTY transportation
6812 SHADY TREE DR. COLUMBUS, OH 43229
ARCHITECTS · CONSULTANTS

DESIGNED	DRAWN	REVIEWED	DATE
AMR	AMR	GDJ	7-18-17
CHECKED	REVISED	STRUCTURE FILE NUMBER	
STK		7600721	

REINFORCING STEEL LIST
BRIDGE NO. STA-172-0420
OVER BRANCH OF NEWMAN CREEK

STA-21-4.46
STA-172-4.20
PID No. 95369

P:\ODOT\04\0009_04-7_STA-21.172-4.46_4.20\95369_STA-21.172-4.46\Design\Structures\STA172_0420C\Sheets\172_0420C_SL001.dgn Sheet 8/11/2017 9:36:09 AM CMT008