APPROVED BY CITY OF MASSILLON OFFICIALS	
MAYOR	6-6-67 DATE
CITY ENGINEER	6-6-67 DATE

DESIGN DESIGNATION

CURRENT A.D.T. 9602 (1967)
DESIGN YEAR A.D.T. 14,220 (1980)
D.H.V. 2275
DIRECTIONAL DISTRIBUTION 60%
PERCENT B & C TRUCKS 15%
DESIGN SPEED 50 M.P.H.

MICROFILMED
APR 26 1974
REPRODUCTIO

STATE OF OHIO
DEPARTMENT OF HIGHWAYS
OBERLIN ROAD VIADUCT
STARK COUNTY ROAD 374

GRADE SEPARATION WITH THE
BALTIMORE AND OHIO RAILROAD COMPANY
NORFOLK AND WESTERN RAILWAY COMPANY

CITY OF MASSILLON, STARK COUNTY

SU-1509 (1)

FED. RD. DIVISION	STATE	PROJECT	
2	OHIO	SU-1509 (1)	

1/57

OBERLIN ROAD VIADUCT
STARK COUNTY ROAD 374

We, the Commissioners of Stark County, in formal session hereby approve these plans and certify that the necessary right-of-way is available. We agree to maintain the project in a manner satisfactory to the Director of Highways, State of Ohio, or his duly authorized representatives and will make ample provision each year for such maintenance.

Done under authority of Sections 5557.02-5591.02 & 723.01 et seq of the Revised Code of Ohio.

BOARD OF COMMISSIONERS STARK COUNTY

JUNE-6-67
DATE

CONVENTIONAL SIGNS

EXISTING RIGHT-OF-WAY
PROPOSED RIGHT-OF-WAY — R/W
PROPOSED LIMITED ACCESS R/W — L.A.
STATE LINE
COUNTY LINE
TOWNSHIP LINE
SECTION LINE
CORPORATION LINE
FENCE LINE
GUARD RAIL (EXISTING)
GUARD RAIL (PROPOSED)
RAILROAD
POWER POLES
TELEPHONE POLES
TREES OR STUMPS (EXISTING)
TREES OR STUMPS (TO BE REMOVED)

INDEX OF SHEETS

Title Sheet	1
Typical Sections	2
General Notes	3
General Summary	4
Plan & Profile Sheets	5-7
Cross Sections	8-10
GUARD RAIL DETAILS	10A & 10B
Pipe Culvert	11
Sanitary Sewer Profile	12
Traffic Control Devices, Signing and Striping	13-23
Lighting Plan	24
Retaining Wall Details	25-27
Approach Slab Details	28
Structures Over 20' Span	29-52
Right-of-Way Sheets	53-57

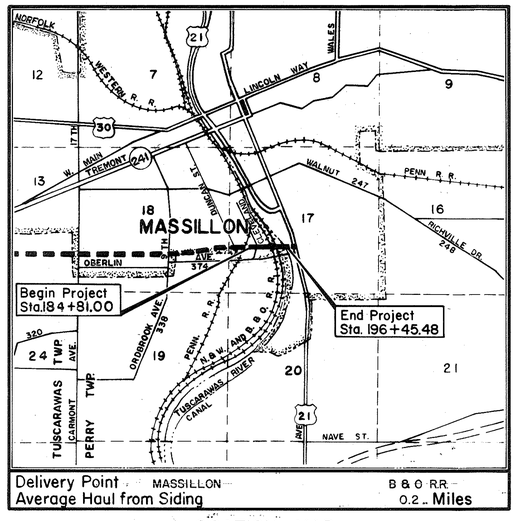

LOCATION MAP
SCALE OF MILES

Portion to be improved
State Routes
Other Roads
Future Construction

SCALES

Plan — Scale in Feet
Profile Horizontal — Scale in Feet
Vertical — Scale in Feet
Cross Sections — Scale in Feet

LINE DATA

BEGIN PROJECT - STA. 184+81.00
BEGIN WORK - STA 184+45.00
END PROJECT - STA 196+45.48
END WORK - STA 197+50.00
NET LENGTH PROJECT = 1164.48 Lin. Ft. or 0.220 Mi.
NET LENGTH WORK = 1305.00 Lin. Ft.
CLEVELAND ST.
BEGIN WORK - STA. 8+00
END WORK - STA. 12+00
NET LENGTH WORK = 400.00 Lin. Ft.
TOTAL NET LENGTH WORK = 1705.00 Lin. Ft. or 0.323 Mi.

MICROFILMED
APR 26 1974
REPRODU

1967 SPECIFICATIONS

The standard specifications of the State of Ohio, Department of Highways, including changes and supplemental specifications listed in the proposal shall govern this improvement.

The right-of-way for this improvement will be provided by the State of Ohio.

I hereby approve these plans and declare that the making of this improvement will not require the closing of the highway to traffic and that provisions for the maintenance and safety of traffic will be as set forth on the plans and estimates.

APPROVED Joseph A. Sturrett
DATE June 6, 1967 COUNTY ENGINEER

APPROVED Clifton M. Stanard
DATE 6-7-67 DIVISION DEPUTY DIRECTOR

APPROVED C. H. Altvater
DATE 9-5-67 ENGINEER OF BRIDGES

APPROVED R. E. Eatlin
DATE 9-21-67 ENGINEER OF LOCATION AND DESIGN

APPROVED R. E. Shultz
DATE 9-21-67 DEPUTY DIRECTOR OF DESIGN AND CONSTRUCTION

APPROVED
DATE DEPUTY DIRECTOR OF RIGHT-OF-WAY

APPROVED Thomas McMajor
DATE 10-3-67 DEPUTY DIRECTOR OF PLANNING AND PROGRAMMING

APPROVED E. W. Wilson
DATE 10-3-67 FIRST ASSISTANT DIRECTOR

APPROVED P. E. Masheter
DATE 10-3-67 DIRECTOR OF HIGHWAYS

Plans prepared by: E. S. PRESTON & ASSOCIATES, LIMITED
COLUMBUS, OHIO

R. J. Lehman
OHIO P.E. NO. 2500

SUPPLEMENTAL PRINTS OF STANDARD CONSTRUCTION DRAWINGS

BP-3	1-10-67	GR-1	1-1-67	MC-3	5-1-66	BR-1-65, SH. 2	11-24-65
BP-5	6-1-65	GR-2A	7-1-67	MC-4	6-1-65	RB-1-55	2-2-59
CB-3	6-1-65			MC-6	6-1-65	SD-1-65 (1 THRU 3)	11-8-65
F-1	6-1-65			MH-1	6-1-65		
				MH-1A	8-1-66	HL-4	1-1-66
FACI-1	9-15-67	HW-E	6-1-65	L-1	6-1-65		
FACI-2	6-1-65	MC-1	6-1-65	AS-1-54	8-10-65		

SUPPLEMENTAL SPECIFICATIONS

828	1-1-67
808	1-13-67
811	1-1-67
815	1-1-67
816	8-6-65
825	1-1-67
1001	3-21-66

FILE No	STARK COUNTY	CO RD. 374
	DATE OF LETTING	19
	CONTRACT NO.	

DEPARTMENT OF TRANSPORTATION
FEDERAL HIGHWAY ADMINISTRATION
BUREAU OF PUBLIC ROADS
APPROVED:

DIVISION ENGINEER DATE

FED. RD. DIVISION	STATE	PROJECT	
2	OHIO	SU-1509(1)	

2/57

OBERLIN ROAD VIADUCT
STARK COUNTY ROAD 374

CODE TYPE 6201

TYPICAL SECTIONS

TYPE 404 ON 304

Scale: 1/4" = 1'-0"

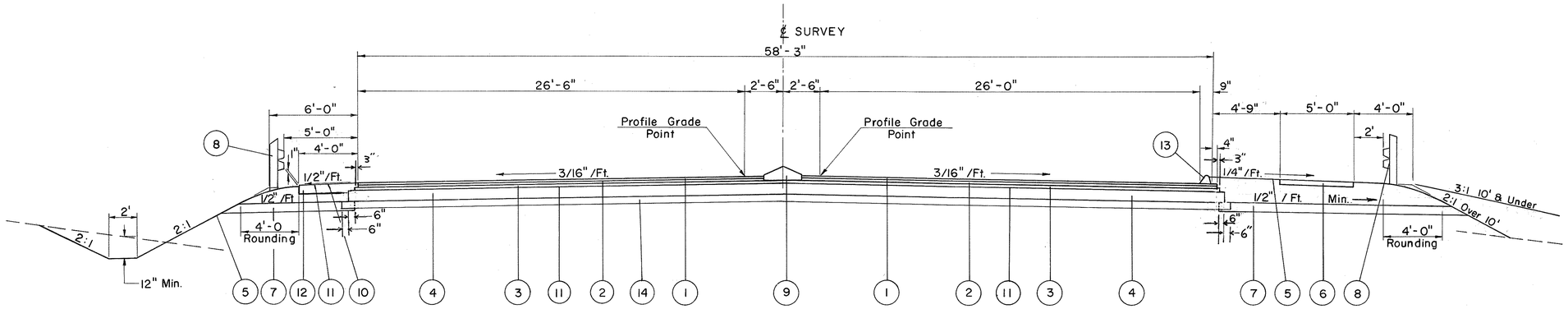

OBERLIN ROAD

LIMITING STATIONS
Sta. 184+81 to Sta. 188+89.87

1. Item 404 1 1/4" Asphalt Concrete (70-85)
2. Item 402 1 3/4" Asphalt Concrete (70-85)
3. Item 302 3" Asphalt Concrete (70-85)
4. Item 304 10" Aggregate Base
5. Item 659 Seeding and Mulching (See General Notes)
6. Item 608 4" Concrete Walk
7. Item 605 Aggregate Drains (See General Notes)
8. Item 606 Guard Rail, Type 4
9. Item 613 Standard Traffic Divider
10. Item 409 Seal Coat Cover Aggregate Using 0.008 C.Y. No. 8 per S.Y. & 0.30 Gal. Seal Coat Bituminous Material per S.Y. 702.09 RT-9 or RT-10 or 702.02 MC-800 or MC-3000
11. Item 408 Bituminous Prime Coat 702.09 RT-2 or RT-3 Applied at the Rate of 0.40 Gal. per S.Y.
12. Item 304 6" Aggregate Base
13. Item 609 Asphalt Concrete Curb (70-85) *Standard Type 1*
14. Item 310 6" Subbase

STARK COUNTY ROAD 374

GENERAL NOTES

AFFECTED UTILITIES

1. OHIO EDISON COMPANY
   48 FIRST STREET N.E.
   MASSILLON, OHIO

2. THE EAST OHIO GAS COMPANY
   1717 EAST NINTH STREET
   CLEVELAND, OHIO

3. THE OHIO BELL TELEPHONE COMPANY
   217 FOURTH STREET N.E.
   CANTON, OHIO

4. CITY OF MASSILLON (STORM & SANITARY)
   CITY HALL
   MASSILLON, OHIO

ROUNDING OF CORNERS SHOWN ON CROSS SECTIONS

THE ROUNDED CORNERS SHOWN ON STANDARD DRAWING MC-1, APPLY TO ALL CROSS SECTIONS, EVEN THOUGH OTHERWISE SHOWN ON THESE PLANS.

FIELD OFFICE

THE CONTRACTOR SHALL, IN ADDITION TO THE REQUIREMENTS OF 105.152, PROVIDE A SUITABLE FIELD OFFICE HAVING A MINIMUM OF 400 SQ. FT. OF FLOOR SPACE. THE CONTRACTOR SHALL HAVE A TELEPHONE INSTALLED AND MAINTAINED IN THIS FIELD OFFICE DURING THE CONSTRUCTION OF THIS PROJECT. THE CONTRACTOR SHALL ALSO PROVIDE AND MAINTAIN SANITARY PROVISIONS AS PER 107.06. ALL THE ABOVE IS INCLUDED IN THE LUMP SUM PRICE BID FOR FIELD OFFICE.

DESIGN SPEED

THE GEOMETRICS FOR THIS PROJECT HAVE BEEN PLANNED FOR A DESIGN SPEED OF 50 MILES PER HOUR

REMOVAL OF TREES AND STUMPS

ALL TREES AND STUMPS SPECIFICALLY MARKED FOR REMOVAL WITHIN THE CONSTRUCTION LIMITS OF THIS PROJECT SHALL BE REMOVED UNDER THE LUMP SUM PRICE BID FOR ITEM 201 CLEARING AND GRUBBING.

THE STATE OF OHIO RESERVES THE RIGHT TO ORDER THE REMOVAL OF ADDITIONAL TREES OR STUMPS OUTSIDE OF THE LIMITS OF CONSTRUCTION BUT WITHIN THE RIGHT-OF-WAY AND OR EASEMENT LINES. PAYMENT FOR THE REMOVAL OF THESE ADDITIONAL TREES OR STUMPS SHALL BE INCLUDED IN THE LUMP SUM PRICE BID FOR ITEM 201 CLEARING AND GRUBBING.

UNDERGROUND UTILITIES

THE LOCATION OF THE UNDERGROUND UTILITIES SHOWN ON THE PLANS HAVE BEEN OBTAINED BY DILIGENT FIELD CHECKS AND SEARCHES OF AVAILABLE RECORDS. IT IS BELIEVED THAT THEY ARE ESSENTIALLY CORRECT, BUT THE STATE OF OHIO DOES NOT GUARANTEE THEIR ACCURACY OR COMPLETENESS.

ESTIMATED QUANTITIES

SPECIFIC LOCATIONS AND USAGE OF ESTIMATED QUANTITIES SET UP ON THIS PLAN TO BE USED "AS DIRECTED BY THE ENGINEER" SHALL BE MADE A MATTER OF RECORD BY INCORPORATION INTO THE FINAL CHANGE ORDER GOVERNING COMPLETION OF THIS PROJECT.

CONSTRUCTION LAYOUT STAKES

SEE NOTE IN PROPOSAL DESCRIBING THE WORK INCLUDED IN THIS LUMP SUM PAY ITEM.

FEDERAL AID CONSTRUCTION IDENTIFICATION SIGN

THE CONTRACTOR SHALL FURNISH, ERECT, MAINTAIN AND SUBSEQUENTLY REMOVE FEDERAL AID CONSTRUCTION IDENTIFICATION SIGN AT THE FOLLOWING APPROXIMATE LOCATION :

1. STATION 185+00 RIGHT

SIGN DETAILS SHALL BE AS SPECIFIED ON STANDARD DRAWING FACI-1, "CODE N-54(0)-96(2),

The sign shall be erected in accordance with Standard Drawing FACI-2. Additional requirements shall be in accordance with notes in the proposal.

SEEDING

QUANTITIES FOR SEEDING ARE CALCULATED FOR THE SOIL AREAS BETWEEN LINES TEN (10) FEET OUTSIDE THE WORK LIMITS, AS SHOWN ON THE CROSS SECTIONS, OR TO THE RIGHT-OF-WAY LINE IF SUCH LINE IS LESS THAN TEN(10) FEET FROM THE WORK LIMITS.

CONNECTION TO EXISTING PIPE

AT PLACES WHERE THE PLANS PROVIDE FOR PROPOSED PIPE TO BE CONNECTED TO EXISTING PIPE, IT SHALL BE THE RESPONSIBILITY OF THE CONTRACTOR TO LOCATE THE EXISTING PIPE BOTH AS TO LINE AND GRADE BEFORE HE STARTS TO LAY THE PROPOSED PIPE. THE COST OF THIS OPERATION SHALL BE INCLUDED IN THE UNIT PRICE BID FOR THE PERTINENT 603 CONDUIT ITEM.

ITEM 605 AGGREGATE DRAINS

AGGREGATE DRAINS SHALL BE PLACED AT FIFTY (50) FOOT INTERVALS ON EACH SIDE OF NORMAL CROWNED SECTIONS

AN AGGREGATE DRAIN SHALL BE PLACED AT THE LOW POINT OF EACH SAG VERTICAL CURVE.

AGGREGATE DRAINS SHALL BE PLACED PRIOR TO SHOULDER CONSTRUCTION IN LIEU OF 605.05 OF THE SPECIFICATIONS.

MAINTENANCE OF SEWER FLOWS

THE CONTRACTOR SHALL CONDUCT HIS OPERATIONS SO AS TO MAINTAIN AT ALL TIMES SEWER FLOWS THROUGH EXISTING FACILITIES TO REMAIN IN PLACE AND THROUGH EXISTING FACILITIES TO BE REPLACED UNTIL NEW FACILITIES ARE COMPLETED AND PLACED INTO USE.

PAYMENT FOR ANY ADDITIONAL COSTS INVOLVED IN MAINTAINING THESE FLOWS BY PUMPING OR BY ANY OTHER MEANS APPROVED BY THE ENGINEER SHALL BE INCLUDED IN THE UNIT PRICES BID FOR THE RESPECTIVE ITEMS OF 603 CONDUIT.

SANITARY FLOW INTO HIGHWAY DRAINAGE SYSTEMS

THIS PLAN MAKES NO PROVISION FOR CONNECTING, NOR SHALL THE ENGINEER OR CONTRACTOR CONNECT, ANY EXISTING OR NEW DRAINAGE INTO THE HIGHWAY DRAINAGE SYSTEM WHEN SUCH DRAINS CARRY FLOW FROM ANY PLUMBING FIXTURES INCLUDING FLOOR DRAINS AND SINK DRAINS OR DRAINS FROM LIVESTOCK LOTS OR BARNS OR POLLUTED WATER OF ANY KIND.

EXISTING PIPE CARRYING FLOW WHICH COMES WITHIN THE CATEGORY OUTLINED ABOVE SHALL BE PLUGGED WITH CLASS E CONCRETE AT THE RIGHT-OF-WAY LINE. PAYMENT FOR SAID PLUGGING SHALL BE INCLUDED IN THE UNIT PRICE BID FOR ITEM 203 EXCAVATION.

CHAIN LINK FENCE

ITEM 607 FENCE TYPE CL-CHAIN LINK FENCE, AS PER PLAN, SHALL BE FOUR (4) FEET IN HEIGHT IN LIEU OF THE FIVE (5) FEET AS SHOWN ON STANDARD CONSTRUCTION DRAWING F-1.

ELEVATION DATUM

ALL ELEVATIONS ARE BASED ON THE U.S.G.S. DATUM.

SANITARY SEWER BY OTHERS

THE SANITARY SEWER LEFT OF STATION 196+30 DESIGNATED TO BE REMOVED BY OTHERS SHALL BE ACCOMPLISHED IN THE FOLLOWING MANNER. THE CONTRACTOR SHALL ADVISE THE DIRECTOR IN WRITING THAT THE 24" SANITARY SEWER OVERFLOW IS TO BE REMOVED BY OTHERS TWO WEEKS PRIOR TO THE TIME THAT THE CONTRACTOR IS READY TO DO THE NECESSARY WORK IN THIS AREA.

EQUIPMENT CONTROL

SELF-PROPELLED CRAWLER DRIVEN MACHINERY, EQUIPPED WITH CLEATS SHALL NOT BE OPERATED ON ANY EXISTING PAVEMENT WHICH IS NOT TO BE DISTURBED, UNLESS PADS ARE FASTENED TO TRACKS BETWEEN CLEATS IN SUCH A MANNER THAT CLEATS WILL BE PREVENTED FROM MAKING CONTACT WITH THE PAVEMENT. CRAWLER EQUIPMENT SHALL BE OPERATED IN SUCH A MANNER THAT DAMAGE TO THE EXISTING OR NEW SURFACES SHALL NOT OCCUR.

TRAFFIC MAINTENANCE

TWO WAY TRAFFIC SHALL BE MAINTAINED ON CLEVELAND STREET AT ALL TIMES.

SEE GENERAL NOTES IN BRIDGE PLAN IN REGARD TO PEDESTRIAN TRAFFIC ON EXISTING STRUCTURE.

REMOVAL OF EXISTING PIPE:

The removal of all existing pipe drains which would normally be removed in various excavation items shall be included for payment in the unit prices bid for the respective excavation items, unless otherwise itemized in the plans.

203 COMPACTION USING HEAVY PNEUMATIC TIRED ROLLER

6 hrs. of rolling time have been provided to cover the entire embankment area. See note in proposal.

BORROW USING GRANULAR MATERIAL, AS PER PLAN:

Although the cross sections indicate a uniform thickness of one foot of Borrow, using granular material, for the entire area on which embankments are to be placed it is intended that the one foot thickness be considered only as an average thickness over the entire area for estimating purposes. The actual amount of granular material placed shall be at the locations and depths as determined by the Engineer to insure a satisfactory foundation for the Superimposed earth embankments. The material furnished for this item shall be as defined in 203.02.

GUARD RAIL TYPE 4 MODIFIED AS PER PLAN:

Guard Rail shall on this project be erected using wood posts except on approach end assembly as detailed on sheet 10-A

The post spacing shall be at 6'-3" intervals with spacer blocks attached between the posts and rail element instead of 12'-6" spacing without spacer blocks as indicated on the plans.

Approach (entrance) ends of Type 4 guard rail shall be constructed with the new guard rail approach end assemblies as detailed on plan page No. 10A. Where either end is adjacent to proposed bridges, the new bridge connector assembly as detailed on plan page No. 10B will apply. The exit (trailing) ends of Type 4 guard rail shall be as detailed on Standard Drawing GR-2A.

Type 4 guard rail with post spacing of 6'-3", spacer blocks and new approach end assemblies will be paid for as 606 Guard Rail, Type 4, Modified As Per Plan, complete in place.

SUB - SUMMARY

LOCATION			ITEM 203 EARTHWORK			SEEDING
STATION	TO	STATION	CUT CU. YDS.	FILL CU. YDS.	BORROW USING GRANULAR MATERIAL CU. YDS.	SQ. YDS.
184+45	-	189+73	1279	29943	1895	6621
196+06	-	197+50		2051		1818
TOTALS			1279	31994	1895	8439 *

* Carried to Calculations below.

CALCULATIONS

ITEM 659 - SEEDING
Seeding - (Dumped Rock Channel Protection + Sodding + Riprap)
8439 - 262 = 8177 Sq. Yds.

ITEM 659 - AGRICULTURAL LIMING
Seeding = [8177 + 129 (Sodding) x 9 x 100 ÷ 1000] ÷ 2000 = 3.74 Tons

ITEM 659 - COMMERCIAL FERTILIZER (12-12-12)
Seeding = [8177 + 129 x 9 ÷ 1000] x 20 ÷ 2000 = 0.75 Tons

ITEM 203 - SUBGRADE PREPARATION
Pavement = 19684 + 5860 + 1450 (App. Slab) ÷ 9 = 3000 Sq. Yds.

ITEM 203 - COMPACTION USING HEAVY PNEUMATIC TIRED ROLLERS (See Note in Proposal)
5,903 Sq. Yds. ÷ 1000 Sq. Yds. Per Hour = 6 Hours

ITEM 404 - ASPHALT CONCRETE (70-85)
Pavement = (19684 + 5860) x 0.104 ÷ 27 = 99 Cu. Yds.

ITEM 402 - ASPHALT CONCRETE (70-85)
Pavement = (19684 + 5860) x 0.146 ÷ 27 = 139 Cu. Yds.

ITEM 302 - ASPHALT CONCRETE (70-85)
Pavement = (19852 + 6100) x 0.250 ÷ 27 = 241 Cu. Yds.

ITEM 304 - AGGREGATE BASE
Pavement = (20188 + 6100) x 0.833 = 21898 Cu. Ft.
Shoulder = 1.875 x 390 = 731 Cu. Ft.
22629 ÷ 27 = 838 Cu. Yds.

ITEM 310 - SUBBASE
Pavement = (20188 + 6100) x 0.50 ÷ 27 = 487 Cu. Yds.

ITEM 408 - BITUMINOUS PRIME COAT
Pavement = 19852 + 6100 = 25952 Sq. Ft. x 0.40 ÷ 9 = 1154 Gal.
Shoulder = 390 x 4 = 1560 Sq. Ft. x 0.40 ÷ 9 = 69 Gal.
Total = 1223 Gal.

ITEM 409 - SEAL COAT COVER AGGREGATE NO. 8
Shoulder = 1560 ÷ 9 x 0.008 = 2 Cu. Yds.

ITEM 409 - SEAL COAT BITUMINOUS MATERIAL
Shoulder = 1560 ÷ 9 x 0.30 = 52 Gal.

ITEM 611 - REIN. CONC. APPROACH SLAB (T=13")
58 x 25 ÷ 9 = 161 Sq. Yds.

GENERAL SUMMARY

OBERLIN RD. VIADUCT
STARK COUNTY RD. 374

FED. RD. DIVISION	STATE	PROJECT	
2	OHIO	SU-1509(I)	

TYPE CODE 6201 UNLESS OTHERWISE SHOWN

SHEET NUMBER 3		4	6				TOT.	6	12	TOTAL	GRAND TOTAL TOTAL	UNITS	ITEM	DESCRIPTION
							Norm Part.	100 % County		100 % County				
														ROADWAY
Lump							Lump				Lump	Lump Sum	201	Clearing and Grubbing
		3000					3000				3000	Sq. Yds	203	Subgrade Preparation
		1279	60				1339				1339	Cu. Yds.	203	Excavation Not Including Embankment Construction, As per plan
		31994					31994				31994	Cu. Yds.	203	Embankment
			25				25				25	Sq. Yds.	202	Existing Pavement Removed and Disposed of
			837.5				837.5				837.5	Lin. Ft.	606	Guard Rail Type 4, Modified as per plan
			2732				2732				2732	Sq. Ft.	608	4" Concrete Walk
		6					6				6	Hours	203	Compaction Using Heavy Pneumatic Tired Roller
		1895					1895				1895	Cu. Yds.	203	Borrow Using Granular Material, As per plan
			625				625				625	Sq. Ft.	202	Existing Sidewalk Removed and Disposed of
			180				180				180	Lin. Ft.	202	Existing Curb Removed and Disposed of
			Lump				Lump				Lump	Lump	202	Removal of 2 Story Frame Residence and One Frame Shed, Parcel No. 4
			Lump				Lump				Lump	Lump	202	Removal of 1½ Story Frame Residence, One Frame Shed and one frame garage Parcel No. 5
								442		442	442	Lin. Ft.	607	Fence Type CL Modified as per plan
														EROSION CONTROL TYPE CODE Y005
			129				129				129	Sq. Yds	660	Sodding
			59				59				59	Cu. Yds.	601	Dumped Rock Channel Protection
			15				15				15	Sq. Yds.	601	Riprap; Using 6" Rein. Concrete Slab, As Per Plan
		8177					8177				8177	Sq. Yds	659	Seeding and Mulching
		0.75					0.75				0.75	Ton	659	Commercial Fertilizer (12-12-12)
		3.74					3.74				3.74	Tons	659	Agricultural Liming
														DRAINAGE
			24				24				24	Lin. Ft.	603	15" Conduit, Type C With Class B Bedding
			248				248				248	Lin. Ft.	603	36" Conduit Type A Class B Bedding 707.05 10 Gage
			1				1				1	Each	604	Catch Basin, Std. No. 3
			1.5				1.5				1.5	Cu. Yds	602	Concrete Masonry
			207				207				207	Lin. Ft.	605	Aggregate Drains
														SANITARY SEWERS TYPE CODE Y060
								91	91	91	91	Lin. Ft.	603	8" Conduit Type A with Class B Bedding 706.02 Class V
														with Compression Joints
								185	185	185	185	Lin. Ft.	603	8" Conduit Type A with Class A Bedding 706.02 Class V
														with Compression Joints
								1	1	1	1	Each	604	Standard No. 1 Manhole
								1	1	1	1	Each	604	Standard No. 1A Manhole
								1	1	1	1	Each	604	Manhole Adjusted to Grade Using Heavy Duty Manhole Frame & Cover
														PAVEMENT
			241				241				241	Cu. Yds.	302	Asphalt Concrete (70-85)
			1223				1223				1223	Gal.	408	Bituminous Prime Coat, 702.09 RT-2 or RT-3
			2				2				2	Cu. Yds.	409	Seal Coat Cover Aggregate No. 8
			52				52				52	Gal.	409	Seal Coat Bituminous Material, 702.09 RT-9 or RT-10 or 702.02 MC-800 or MC-3000
			838				838				838	Cu. Yds.	304	Aggregate Base
			139				139				139	Cu. Yds.	402	Asphalt Concrete (70-85)
			99				99				99	Cu. Yds.	404	Asphalt Concrete (70-85)
			161				161				161	Sq. Yds.	611	Reinforced Concrete Approach Slab (T=13") Modified as per Plan
			31				31				31	Each	613	Standard Traffic Divider
			545				545				545	Lin. Ft.	609	Standard Type 1 Asphalt Concrete Curb (70-85)
			487				487				487	Cu. Yds.	310	Subbase
														RETAINING WALLS - FOR QUANTITIES See Sh. No. 27
														STRUCTURES OVER 20' SPAN
														Oberlin Road Viaduct - For Quantities See Sheet No. 32
														TRAFFIC CONTROL DEVICES
														For Quantities See Sheet Nos. 14 and 21
Lump							Lump				Lump	Lump	614	Maintaining Traffic
Lump							Lump				Lump	Lump		Construction Layout Stakes
Lump							Lump				Lump	Lump		Field Office

FED. RD. DIVISION	STATE	PROJECT	
2	OHIO	SU-1509 (1)	

5
57

OBERLIN ROAD VIADUCT
STARK COUNTY ROAD 374

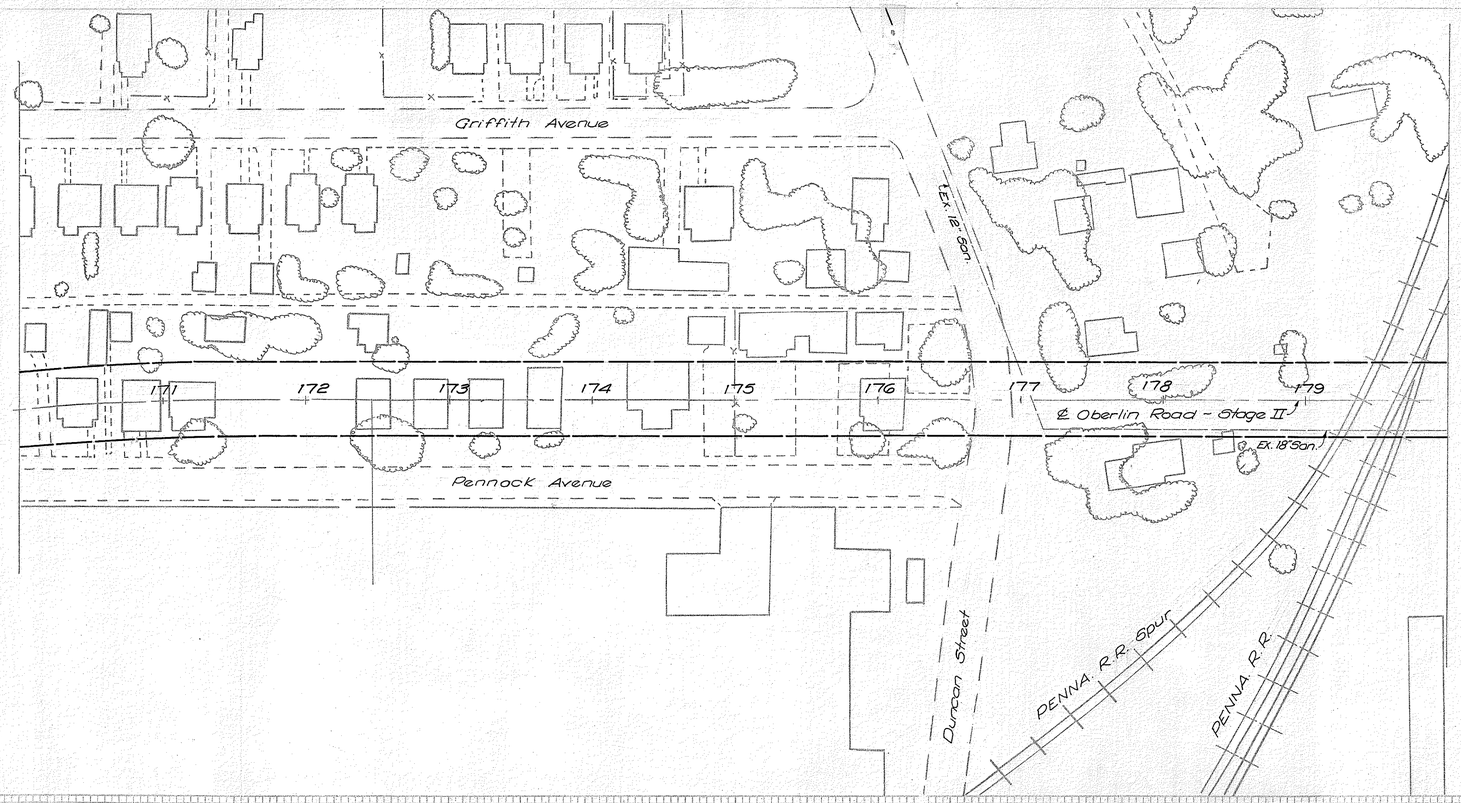

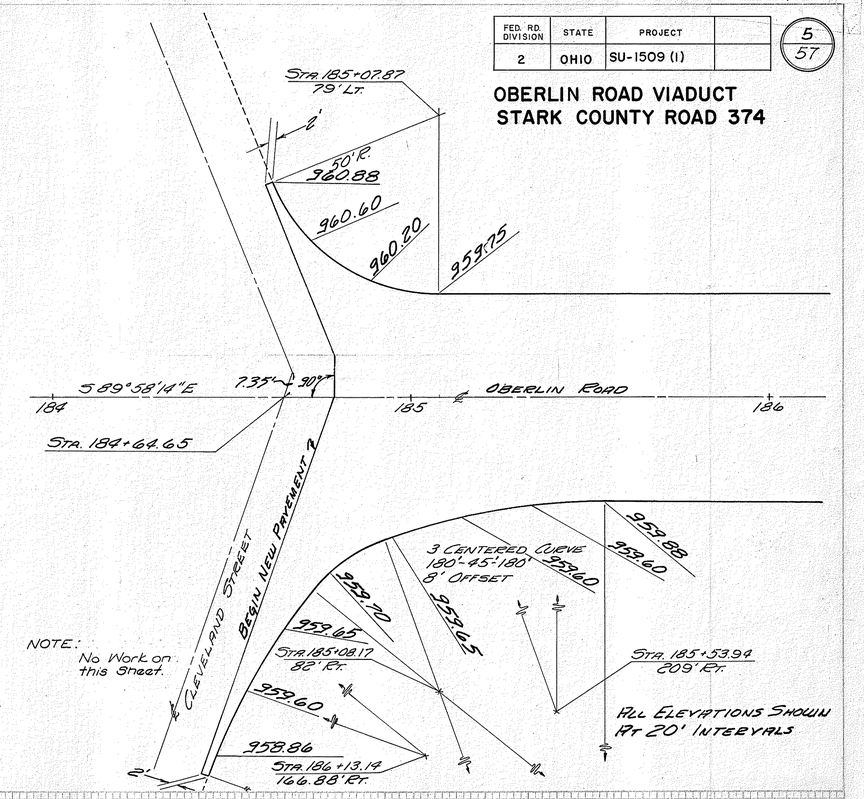

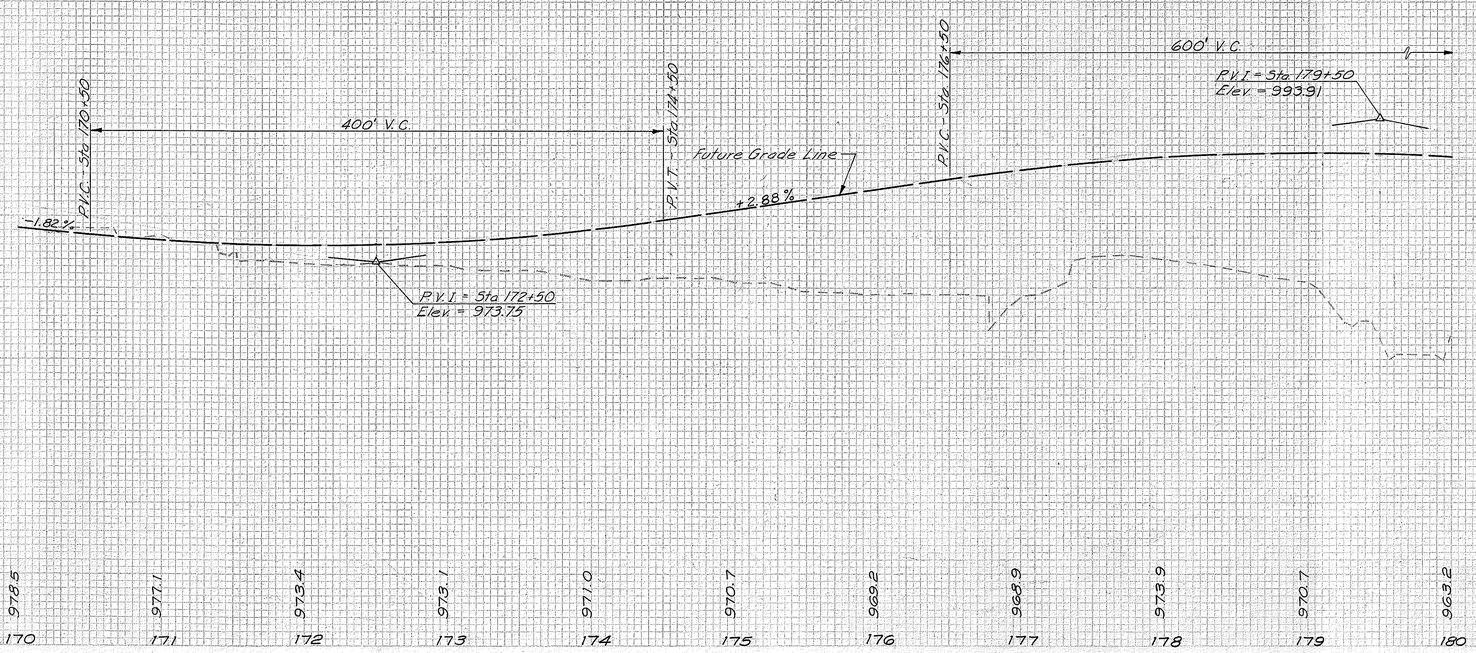

Sta. 170+00 to Sta. 180+00

OBERLIN ROAD VIADUCT
STARK COUNTY ROAD 374

FED. RD. DIVISION	STATE	PROJECT
2	OHIO	SU-1509 (1)

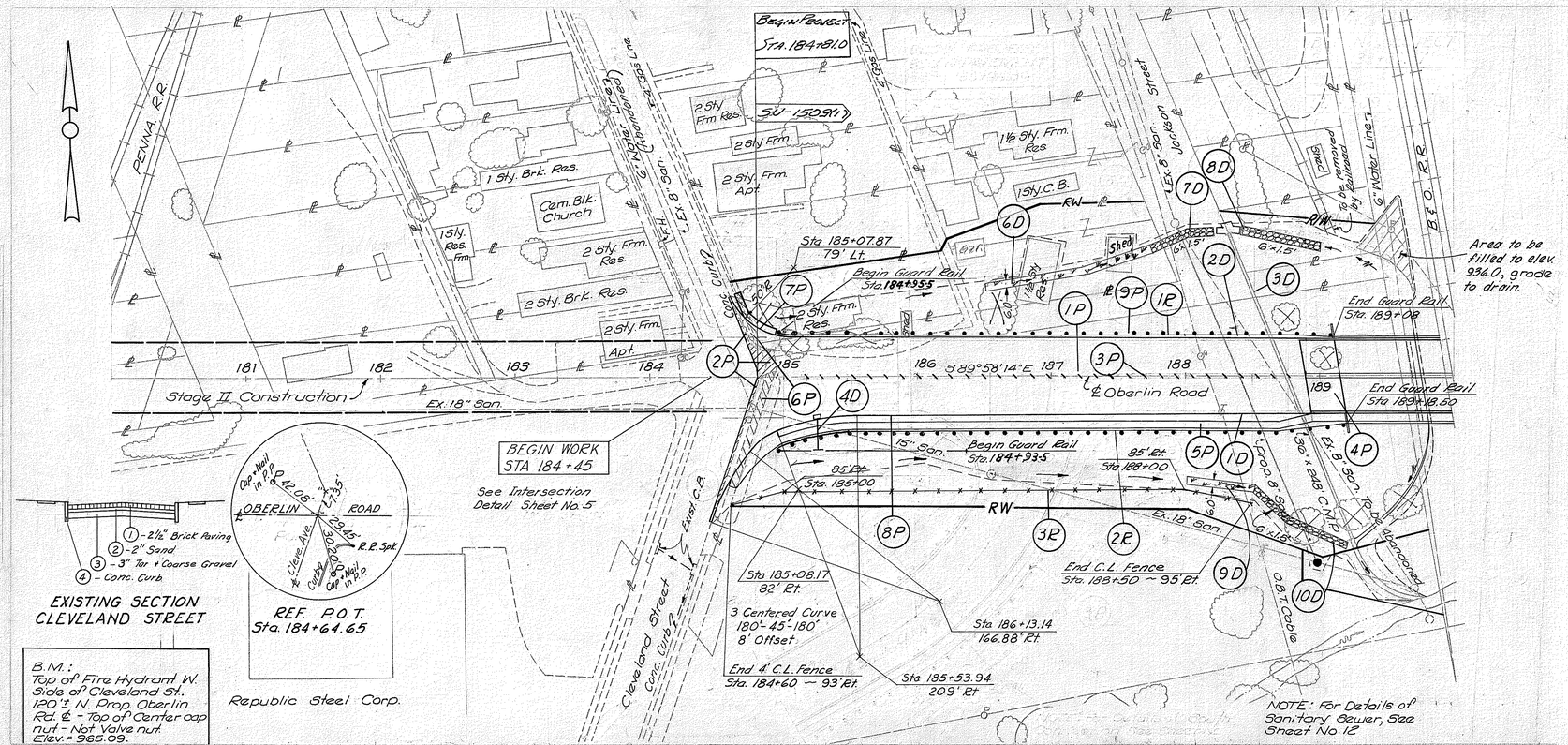

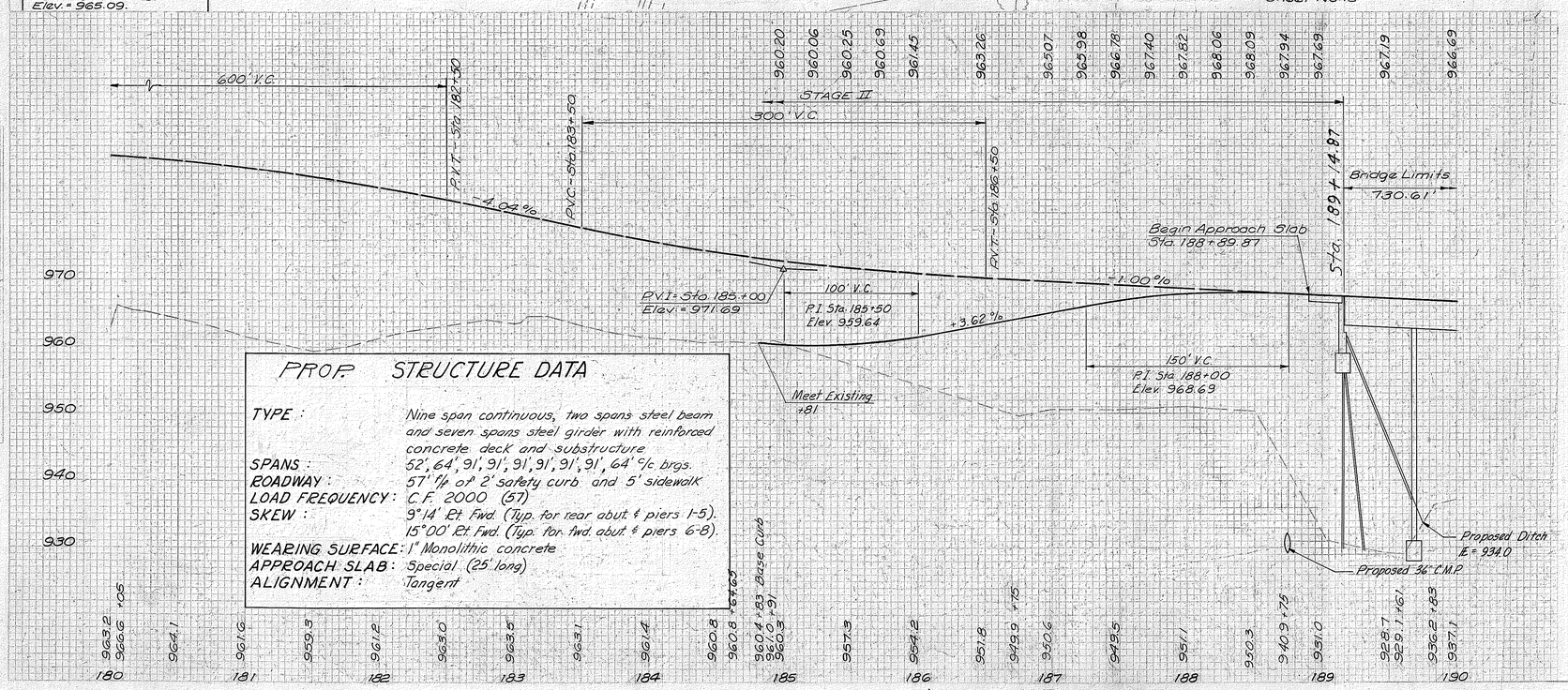

PROP. STRUCTURE DATA

TYPE:	Nine span continuous, two spans steel beam and seven spans steel girder with reinforced concrete deck and substructure
SPANS:	52', 64', 91', 91', 91', 91', 91', 91', 64' ℄ brgs.
ROADWAY:	57' f/p of 2' safety curb and 5' sidewalk
LOAD FREQUENCY:	C.F. 2000 (57)
SKEW:	9°14' Rt. Fwd. (Typ. for rear abut & piers 1-5). 15°00' Rt. Fwd. (Typ. for fwd. abut & piers 6-8).
WEARING SURFACE:	1" Monolithic concrete
APPROACH SLAB:	Special (25' long)
ALIGNMENT:	Tangent

ESTIMATED QUANTITIES

Ref. No.	Station to Station	Side	203 Excav. Not Including Embank. Const. Cu. Yd.	304 Aggregate Base Cu. Yd.	404 Asphalt Concrete (70-85) Cu. Yd.	402 Asphalt Concrete (70-85) Cu. Yd.	601 Dumped Rock Channel Protection Cu. Yd.	602 Concrete Masonry Cu. Yd.	603 36" Conduit Type "A" Sec. 701.06 Lin. Ft.	603 Conduit Type "A" Sec. 701.06 10 Gage Lin. Ft.	202 Exist. Curb Lin. Ft.	202 Exist. Sidewalk Sq. Yd.	202 Exist. Pavement Sq. Yd.	607 Exist. Chain Link Fence Lin. Ft.	605 Aggr. Std. Drains Type 4 Lin. Ft.	606 Std. Guard Rail Lin. Ft.	608 4" Conc. Walk Sq. Yd.	603 18" Conduit No. 3 Type C Lin. Ft.	604 Std. Catch Basin Each	611 13" Reinf. Conc. Apron Slab at Inlet Sq. Yd.	310 Subbase Cu. Yd.	660 Sadding Sq. Yd.	613 Standard Traffic Dividers Each	408 Bit. Prime Coat Gal.	409 Seal Coat Cover Agg. C. Y.	409 Seal Coat Bit. Material Gal.	601 Riprap 6" Reinf. Conc. Slab Sq. Yd.	609 Asphalt Concrete Curb (70-85) Lin. Ft.	302 Asphalt Concrete (70-85) Sq. Yd.	See Sheet No.
1-P	Sta. 184+45 to Sta. 188+89.87	℄																												
2-P	Sta. 184+45 to Sta. 184+93	Lt + Rt.																												
3-P	Sta. 185+18 to Sta. 189+78	℄																												
4-P	Sta. 189+89.87 to Sta. 189+14.87	℄																												
5-P	Sta. 184+60 to Sta. 189+19	Rt.																												
6-P	Sta. 184+60 to Sta. 184+86	Lt. + Rt.																												
7-P	Sta. 184+60 to Sta. 185+08	Lt.																												
8-P	Sta. 184+47 to Sta. 188+83	Rt.																												
9-P	Sta. 184+60 to Sta. 188+83	Lt.																												
1-D	Sta. 185+00 to Sta. 188+94.60	Rt.																												
2-D	Sta. 183+00 to Sta. 188+85.80	Lt.																												
3-D	Sta. 188+31 to Sta. 189+23	Lt. + Rt.	60																											
4-D	Sta. 185+25	Rt.																												
6-D	Sta. 184+50 to Sta. 187+75	Lt.																												
7-D	Sta. 187+75 to Sta. 188+29	Lt.																												
8-D	Sta. 188+40 to Sta. 189+00	Lt.																												
9-D	Sta. 188+00 to Sta. 188+50	Rt.																												
10-D	Sta. 188+50 to Sta. 189+10	Rt.																												
1-R	Sta. 184+95.5 to Sta. 189+08	Lt.														412.5														
2-R	Sta. 184+93.5 to Sta. 189+18.50	Rt.														425.0														
3-R	Sta. 186+60 to Sta. 188+50	Rt.																												
TOTALS			60	838	99	139	59	15	248	180	625	65	442	207	24	837.5	1	161	487	129	31	1223	52	2	15	545	241			

Sta. 180+00 to Sta. 190+00

OBERLIN ROAD VIADUCT
STARK COUNTY ROAD 374

FED. RD. DIVISION	STATE	PROJECT	
2	OHIO	SU-1509(1)	

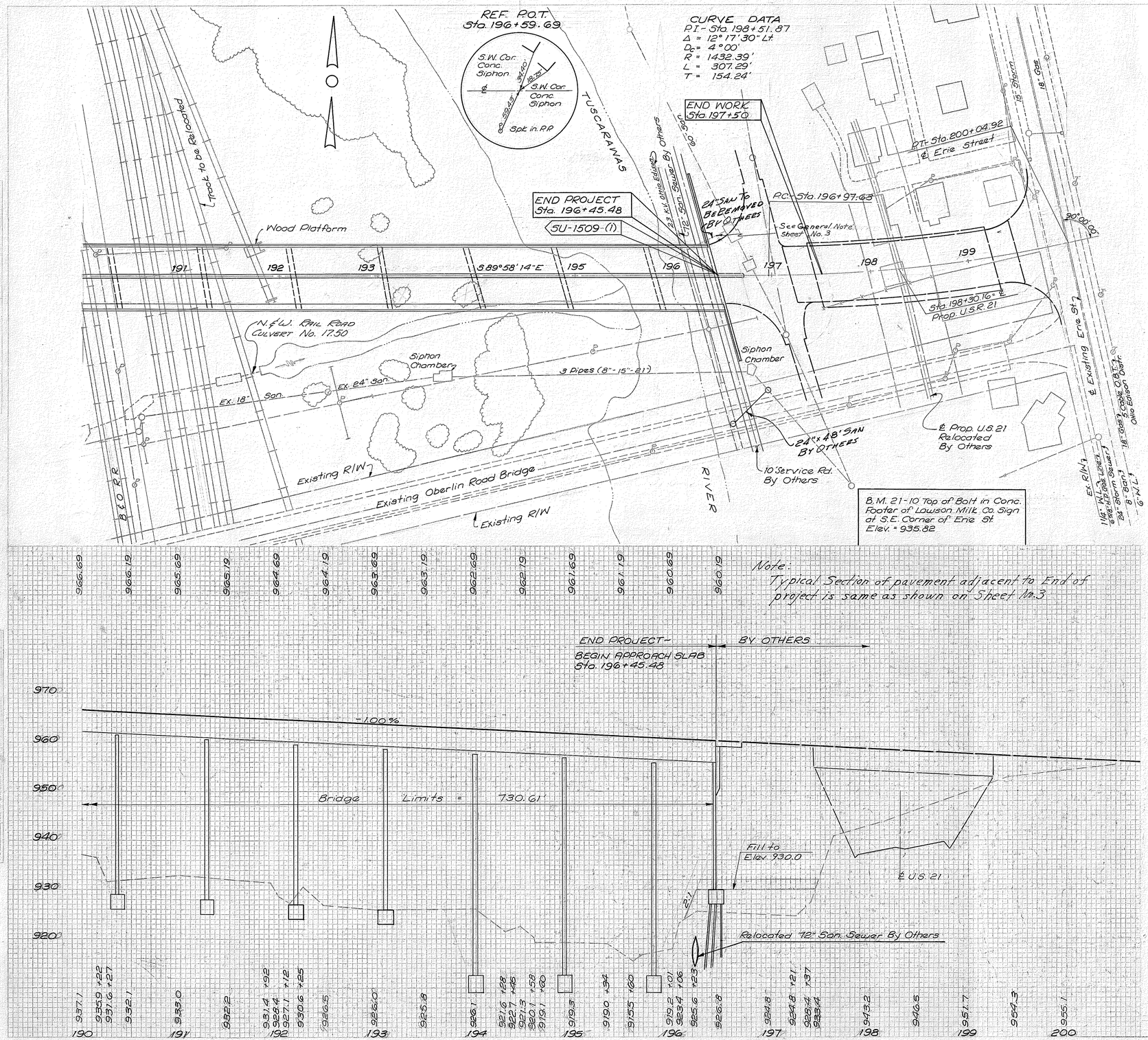

Sta. 190+00 to Sta. 200+00

FED. RD. DIVISION	STATE	PROJECT	
2	OHIO	SU-1509(1)	

OBERLIN ROAD VIADUCT
STARK COUNTY ROAD 374

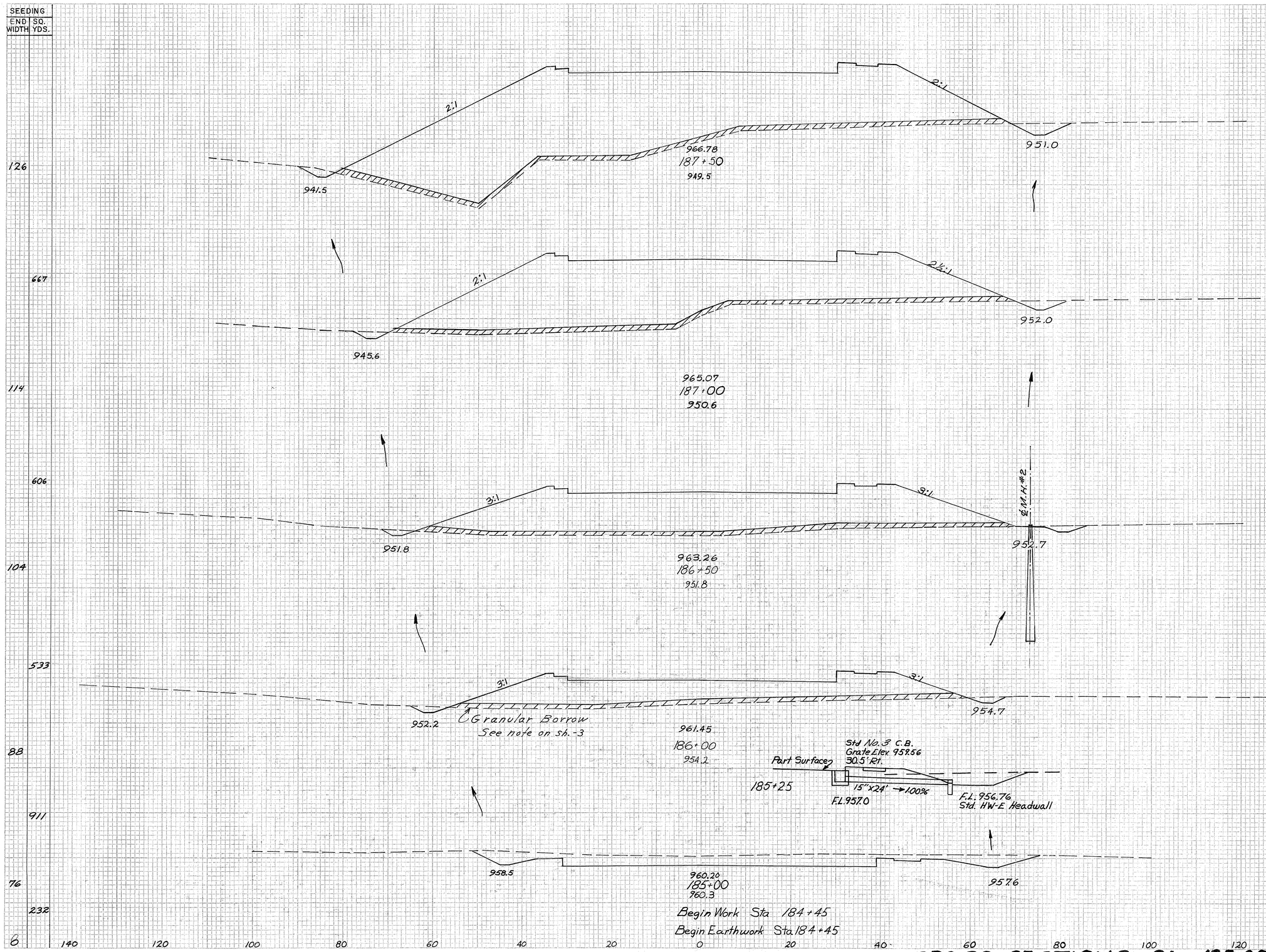

	BORROW		END AREA		VOLUME	
	E. A.	C.Y.	CUT	FILL	CUT	FILL
	147		30	1959		
		263			48	3048
	137		22	1333		
		247			39	2095
	130		20	930		
		223			37	1317
	111		20	493		
		206			472	913
	0		235	0		
		0			239	0
	0		0	0		

CROSS SECTIONS Sta. 185+00 - 187+50

FED. RD. DIVISION	STATE	PROJECT	
2	OHIO	SU-1509 (1)	

OBERLIN ROAD VIADUCT
STARK COUNTY ROAD 374

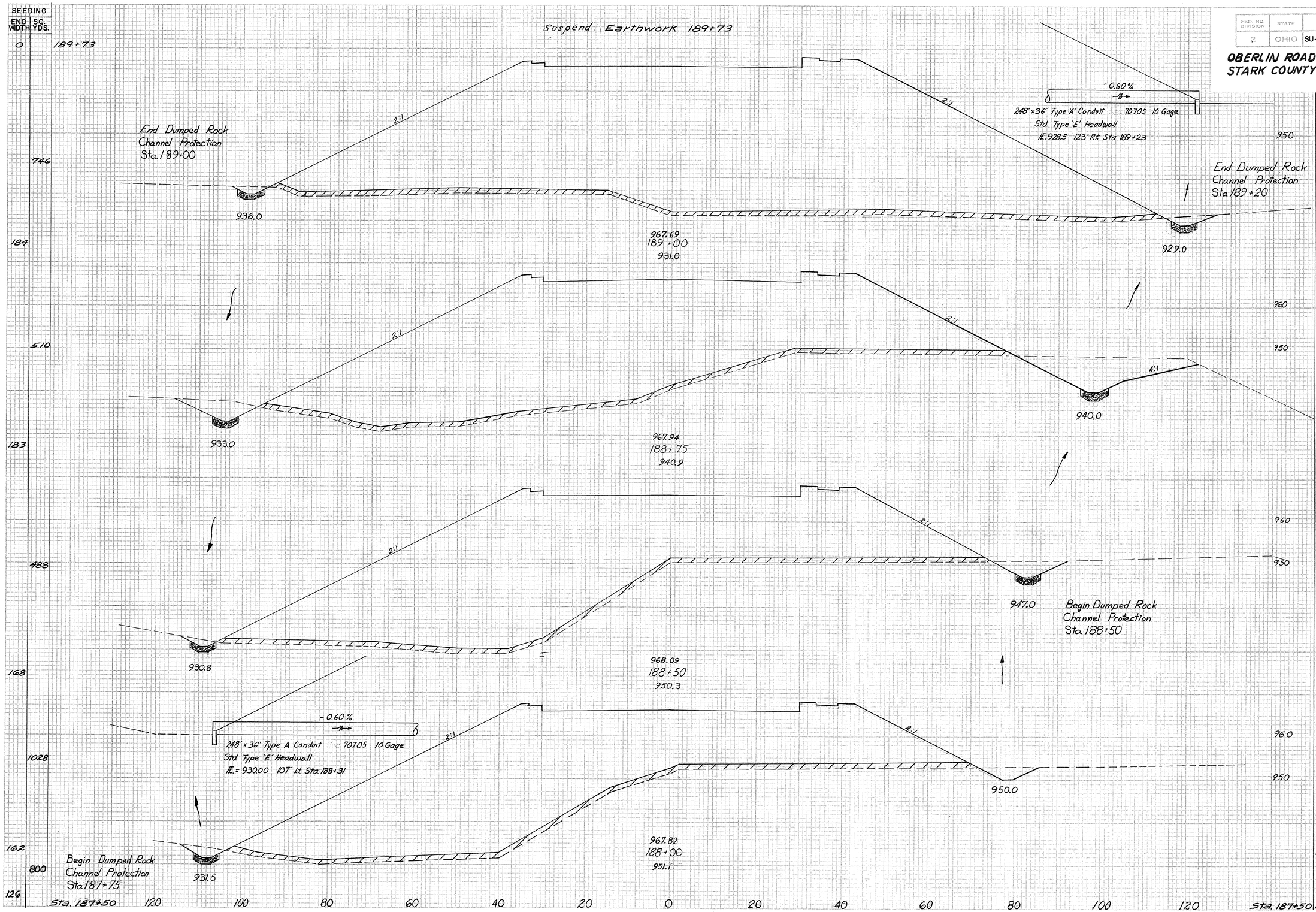

BORROW		END AREA		VOLUME	
E.A.	C.Y.	CUT	FILL	CUT	FILL
		0	0		
				81	6283
206		60	9648		
	175			65	3669
172		81	3266		
	162			75	2936
178		80	3071		
	324			135	5359
172		65	2717		
	295			88	4330
147		30	1959		

CROSS SECTIONS ~ Sta. 188+00 ~ 189+00

FED. RD. DIVISION	STATE	PROJECT	
2	OHIO	SU-1509 (1)	

10
57

OBERLIN ROAD VIADUCT
STARK COUNTY ROAD 374

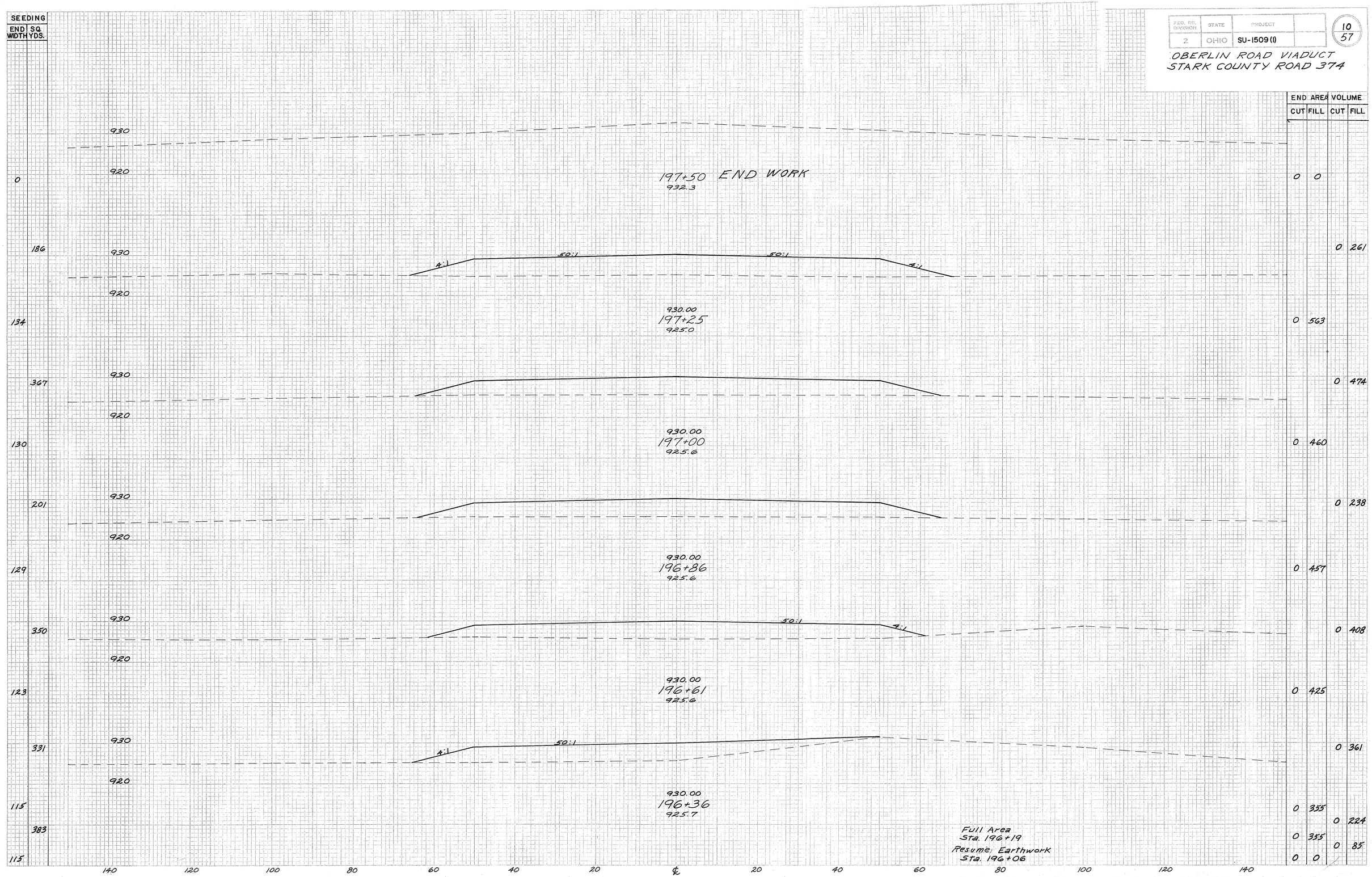

Cross-Section Sheet Sta. 196+36 to Sta. 197+50

FED. RD. DIVISION	STATE	PROJECT	
2	OHIO		

10A / 57

STARK COUNTY ROAD 374

NOTES

For details not shown, see Standard Drawings GR-1 and GR-2A.

All steel parts shall be galvanized in accordance with ASTM A123, A153 or A525, whichever may apply.

This drawing shall govern where a conflict arises.

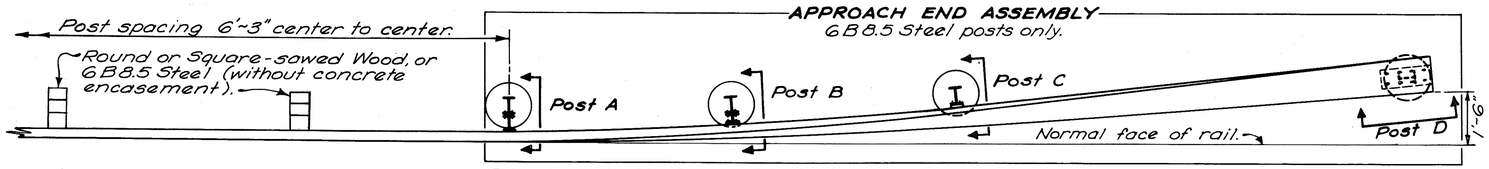

SINGLE RAIL ~ PLAN VIEW

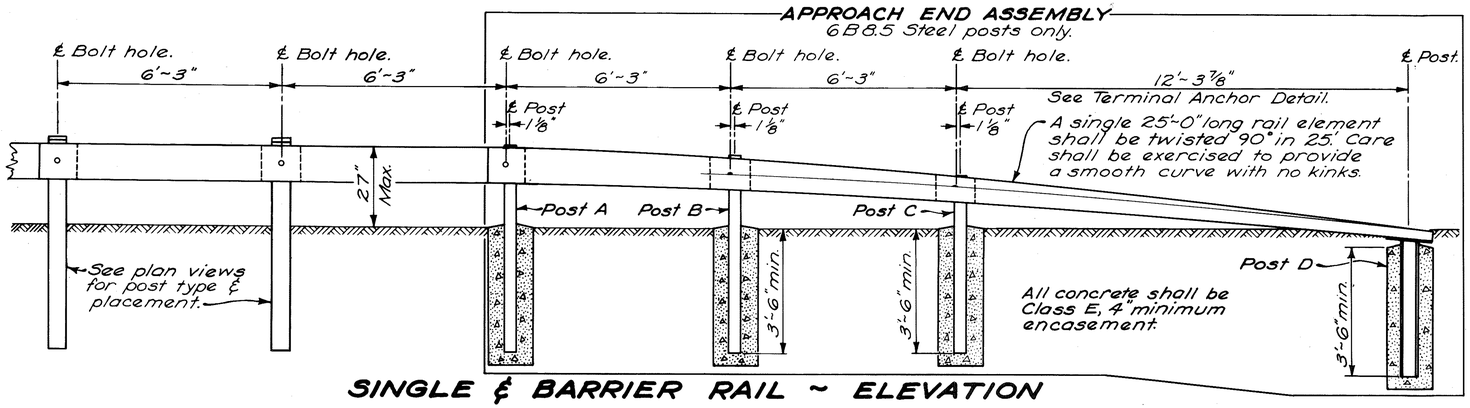

SINGLE & BARRIER RAIL ~ ELEVATION

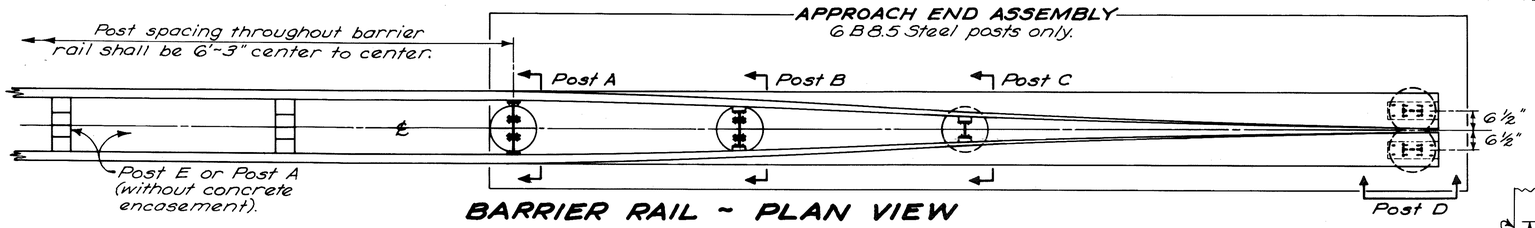

BARRIER RAIL ~ PLAN VIEW

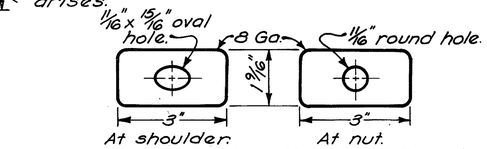

POST BOLT WASHERS

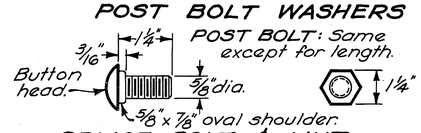

SPLICE BOLT & NUT

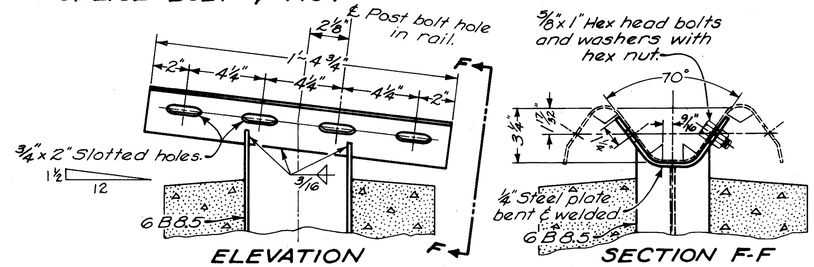

TERMINAL ANCHOR DETAIL

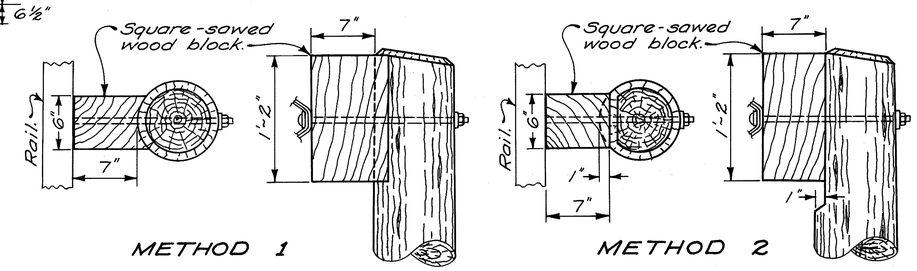

ROUND WOOD POSTS *

Alternate methods of placing the spacer blocks on the round posts may be submitted for consideration and approval by the Engineer.

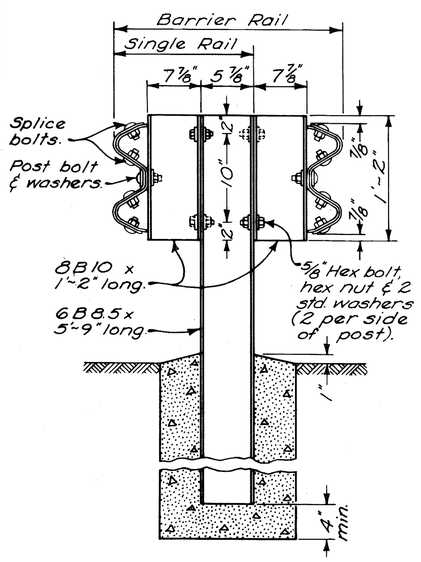

POST A

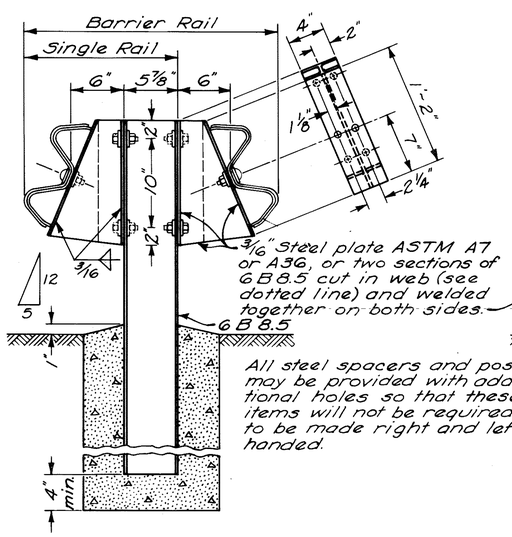

POST B

All steel spacers and posts may be provided with additional holes so that these items will not be required to be made right and left handed.

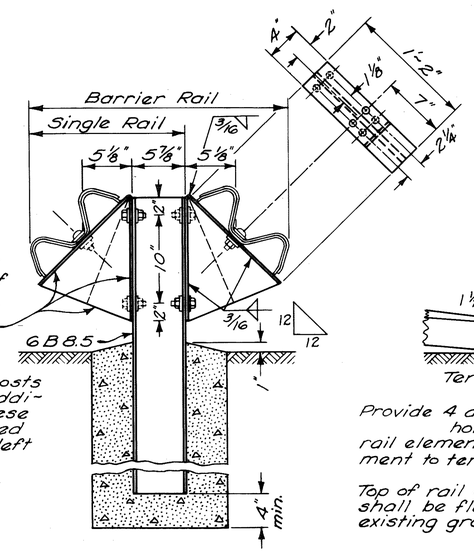

POST C

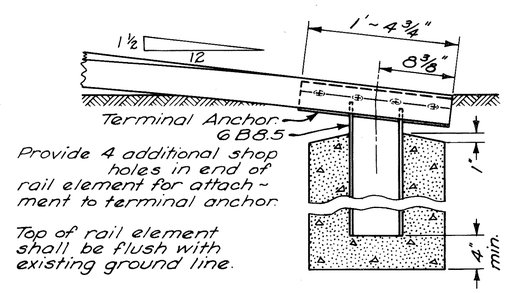

Provide 4 additional shop holes in end of rail element for attachment to terminal anchor.

Top of rail element shall be flush with existing ground line.

POST D

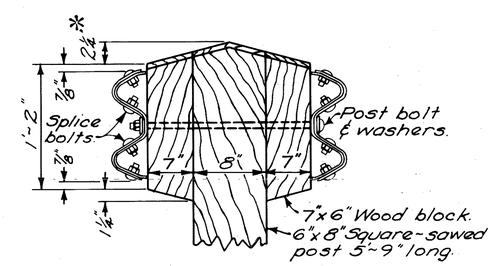

All wood posts and wood spacer blocks shall be pressure treated as per 710.14.

POST E

* Tops of driven posts need not be trimmed.

GUARD RAIL ~ APPROACH END ASSEMBLY

Rev. 8-28-67

FED. RD. DIVISION	STATE	PROJECT	
2	OHIO		

10B
57

STARK COUNTY ROAD 374

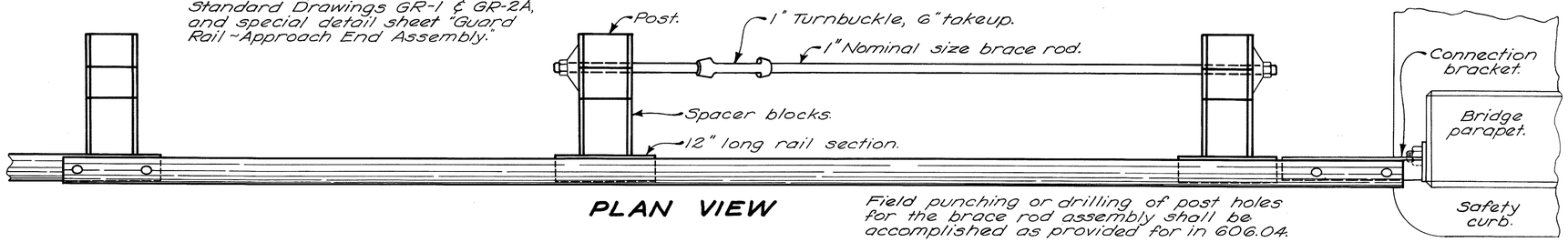

PLAN VIEW

Field punching or drilling of post holes for the brace rod assembly shall be accomplished as provided for in 606.04.

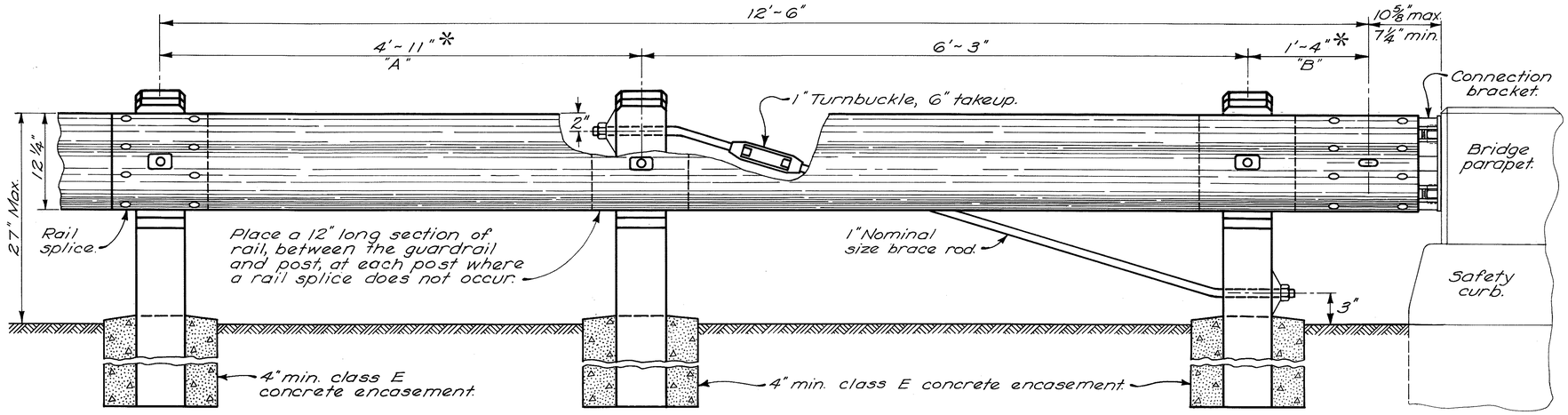

ELEVATION

GUARDRAIL TERMINAL AT BRIDGE

* Dimension "A" shall decrease as dimension "B" increases to accommodate interference by the bridge substructure.

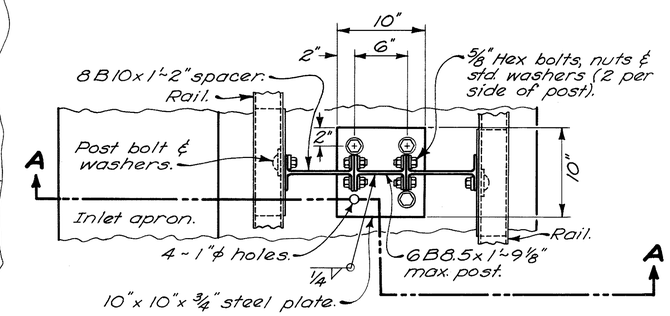

PLAN VIEW

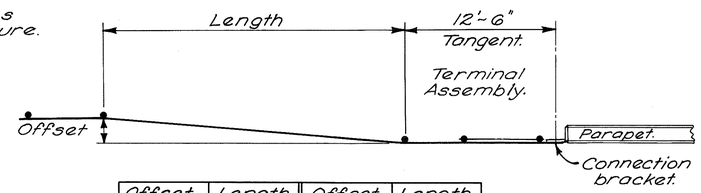

Offset	Length	Offset	Length
1'~0"	25.00'	5'~0"	100.00'
2'~0"	50.00'	6'~0"	100.00'
4'~0"	100.00'	7'~0"	100.00'

GUARDRAIL OFFSET DETAIL

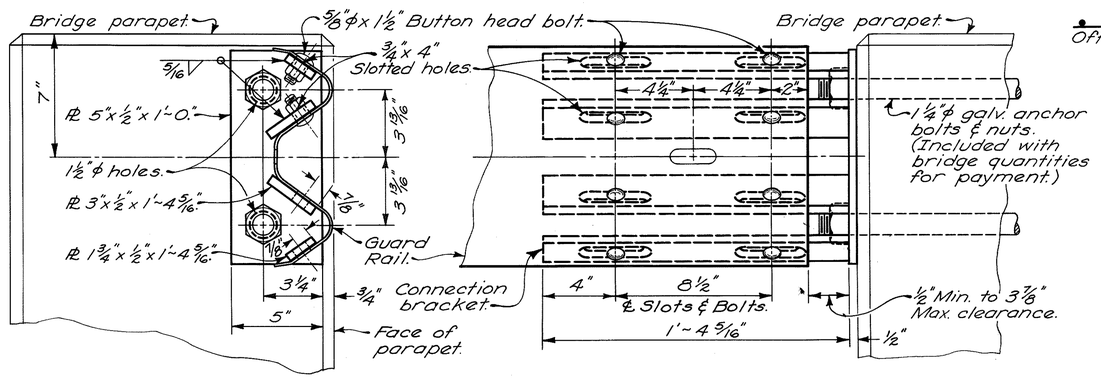

CONNECTION BRACKET DETAIL

GUARDRAIL ~ BRIDGE CONNECTION

The connection bracket shall be galvanized after welding and shall be included with guardrail for payment.

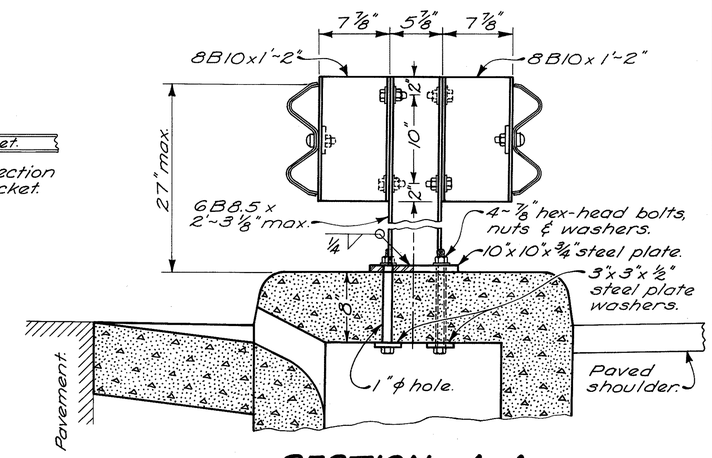

SECTION A-A

BARRIER RAIL MOUNTED ON MEDIAN INLET

This design shall be used for posts located over inlets regardless of the type of post used on the approaches.

BRIDGE TERMINAL ASSEMBLY

FED. RD. DIVISION	STATE	PROJECT	
2	OHIO	SU-1509 (1)	

OBERLIN ROAD VIADUCT
STARK COUNTY ROAD 374

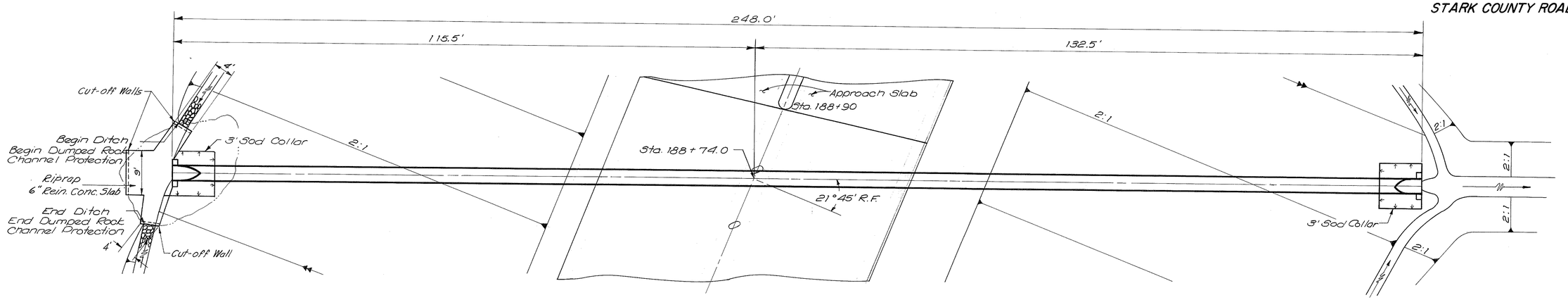

PLAN

Drainage Area = 20 acres
Q 25 = 42 c.f.s.

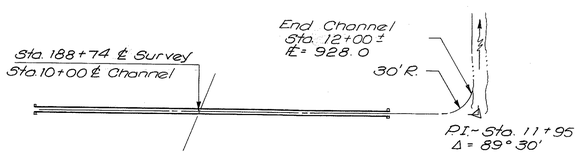

ESTIMATED QUANTITIES

203	Excavation not including Embankment Construction	60	Cu. Yds.
602	Masonry Concrete	1.2	Cu. Yds.
603	36" Conduit, Type "A", 707.05 Gage 10, with Class B Bedding	248	Lin. Ft.
660	Sodding	13	Sq. Yds.
601	Riprap, Using 6" Rein. Conc. Slab	15	Sq. Yds.

CROSS SECTIONS

Scale: 1" = 10'

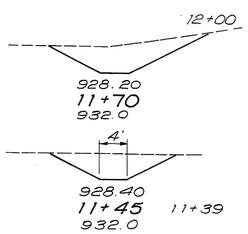

203	
END AREA	CU. YDS.
0	
	19
46	
	37
38	
	4
0	
Total = 60	

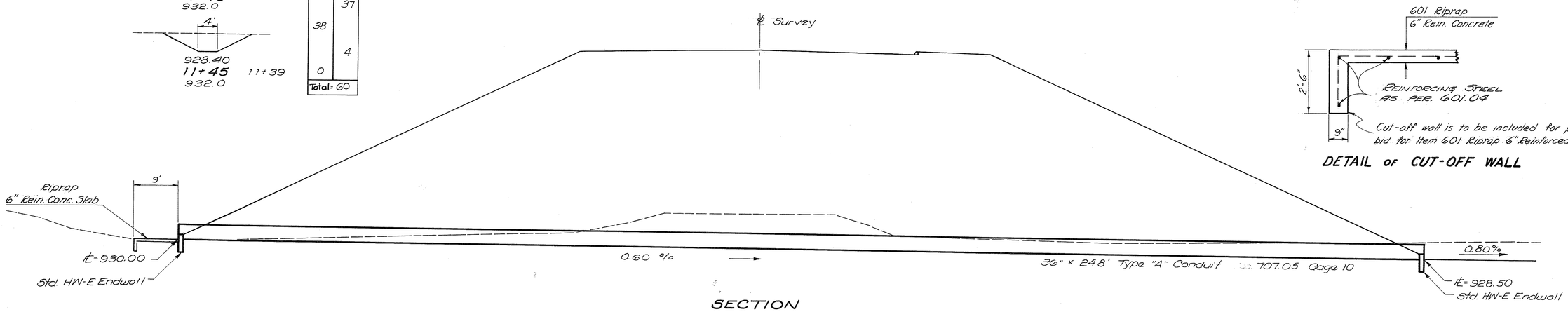

SECTION

Scale: 1" = 10'

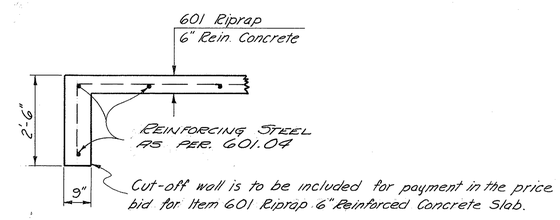

DETAIL OF CUT-OFF WALL

PIPE CULVERT - Sta. 188+74

FED. RD. DIVISION	STATE	PROJECT	
2	OHIO	SU-1509 (1)	

OBERLIN ROAD VIADUCT
STARK COUNTY ROAD 374

☆ Pipe Shall be plugged in a manner acceptable to the Engineer and included for payment in the price bid for the 8" Conduit item 603.

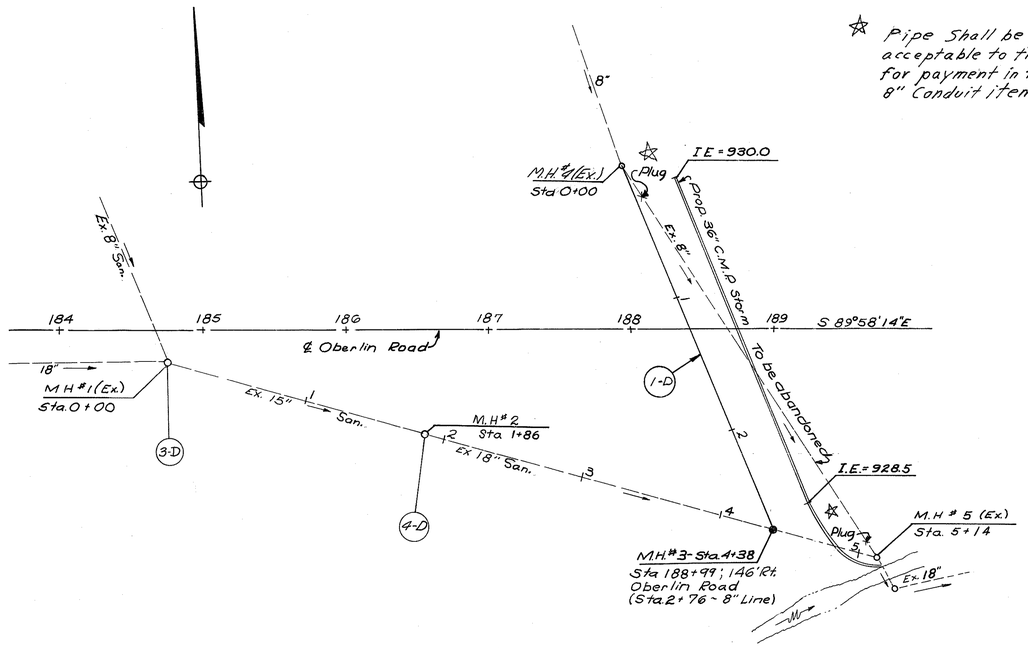

* This manhole shall be adjusted to grade using a heavy duty Manhole frame and cover as detailed on Std. Dwg. MH-1 in lieu of the salvaged frame and cover.

ESTIMATED QUANTITIES

REF. NO.	STATION to STATION	SIDE	603 TYPE A CONDUIT WITH COMP. JOINTS CLASS B BEDDING 706.02 CLASS V 8"	CLASS A BEDDING 706.02 CLASS V 8"	604 STD. NO. 1 M. H.		* 604 MANHOLE ADJUSTED TO GRADE	604 STD. NO. 1A M.H.
			Lin. Ft.	Lin. Ft.	Each		EACH	EACH
1-D	Sta 0+00 ~ Sta 2+76		91	185	1			
3-D	Sta. 0+00						1	
4-D	Sta. 1+86							1
	TOTALS		91	185	1		1	1

Note Item 4-D: Item 604 Standard No. 1-A Manhole to be finished 6" above existing ground.

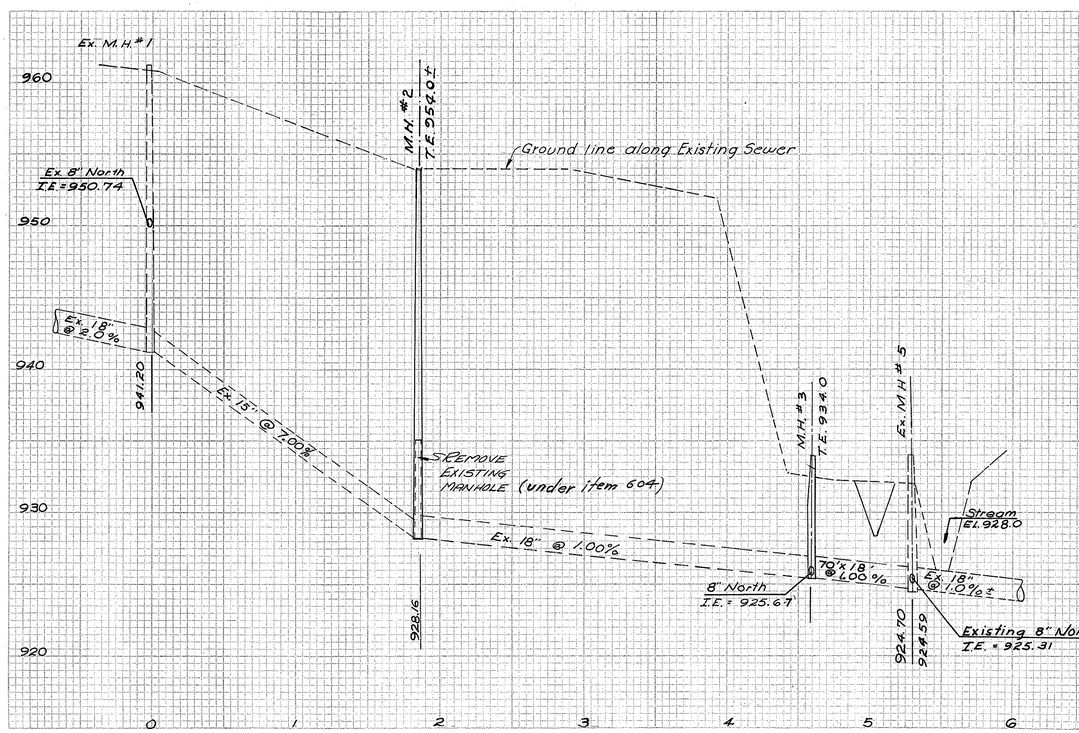

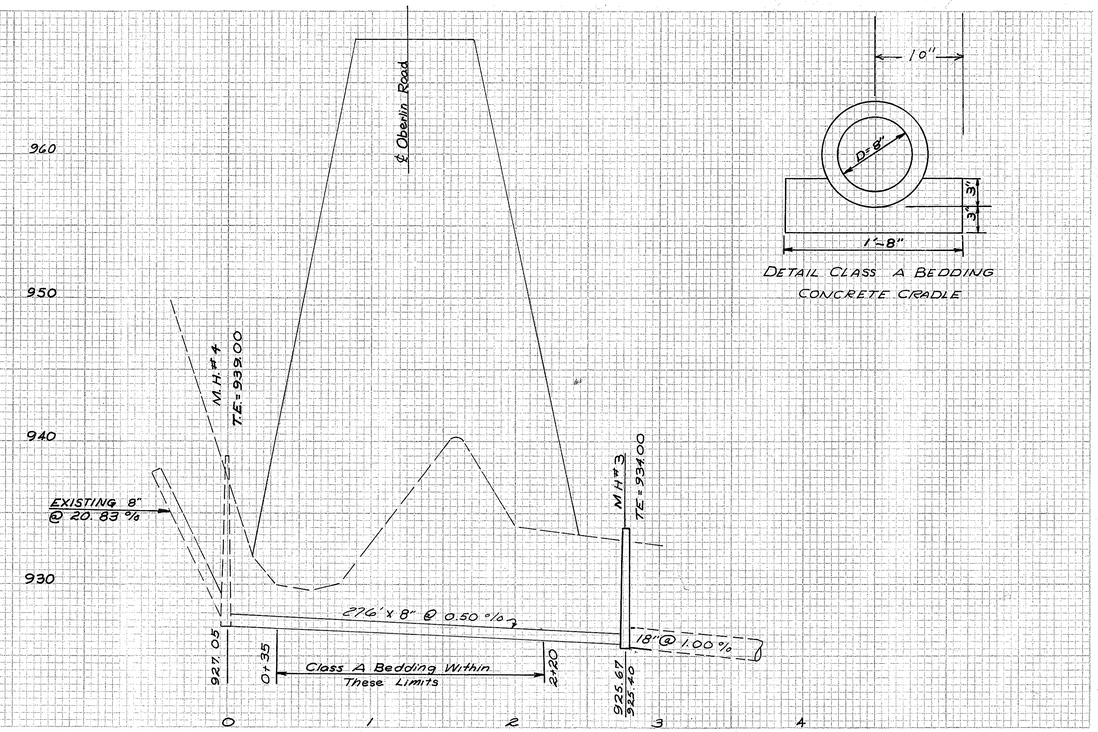

DETAIL CLASS A BEDDING
CONCRETE CRADLE

SANITARY SEWER PROFILES

GENERAL NOTES

SIGN SUPPORT SYMBOLS

⊥ SIGNS ON ONE SUPPORT.
•— SINGLE OVERHEAD STRUCTURE.

IDENTIFICATION OF TRAFFIC SIGNS

IDENTIFICATION OF ALL TRAFFIC SIGNS IS BY CODE NUMBER. NUMBERS REFER TO THE SIGN DESIGN BEARING THE SAME NUMBER.

ORIENTATION OF SIGN FACES

SIGNS SHALL BE ERECTED SO THAT THE FACE OF THE SIGN IS VERTICAL AND AT A RIGHT ANGLE TO THE CENTER OF THE LANE WHICH THE SIGN SERVES EXCEPT WHERE OTHERWISE NOTED. WHERE LANES DIVIDE AND ON SHARP HORIZONTAL CURVES, SIGN FACES SHALL BE PLACED PERPENDICULAR TO THE TANGENT POINT OF THE CURVE AT THE STATION LOCATION, SO AS TO BE MOST EFFECTIVE BOTH DAY AND NIGHT.

DIMENSIONS

DIMENSIONS OF SIGNS ARE INDICATED ON THE PLANS WITH THE HORIZONTAL WIDTH DIMENSION SHOWN FIRST, THEN THE VERTICAL DIMENSION.

GALVANIZED SUPPORTS

THE STRUCTURAL STEEL BEAM SUPPORTS INCLUDING THE 8# AND 4# BEAM, AND 4#, 2# DRIVE POST SHALL BE GALVANIZED (AFTER PUNCHING) IN ACCORDANCE WITH ASTM A123. ALL BOLTS, NUTS, PLAN AND LOCKWASHERS SHALL BE GALVANIZED IN ACCORDANCE WITH ASTM A153, EXCEPT WHERE ALUMINUM OR STAINLESS STEEL IS REQUIRED.

APPROVED DRAWINGS AND MATERIALS

THE CONTRACTOR SHALL SUBMIT THROUGH PROPER CHANNELS FOR REVIEW AND APPROVAL THE FOLLOWING DRAWINGS, INFORMATION, AND SAMPLES IN REGARD TO OVERHEAD SIGN SUPPORTS AND SIGN LIGHTING ITEMS.

A. SIX COPIES OF SHOP DRAWINGS AND MATERIAL LISTS FOR APPROVAL:

   1. OVERHEAD SIGN SUPPORTS.
   2. SIGN LIGHTING LAYOUT PLAN AND DETAILS FOR WIRING, CONDUIT SIZE AND PLACEMENT FROM SIGN DISCONNECT SWITCH TO FIXTURE.

B. 10 COPIES OF CATALOG CUTS DESCRIPTIONS OF SAMPLES OF FABRICATORS STANDARD ITEMS AS SHOWN IN THE PLANS OR THEIR EQUALS FOR APPROVAL OF THEIR USE.

C. CERTIFICATIONS AND/OR SAMPLES FOR ALL MATERIAL WHICH HAVE BEEN APPROVED UNDER "A" AND "B".

D. APPROVAL OF ITEMS UNDER "A" AND "B" SHALL BE IN THE HANDS OF THE CONTRACTOR PRIOR TO ANY PURCHASE OR INSTALLATION.

E. CERTIFICATIONS OF SAMPLES UNDER "C" MUST BE IN HAND AND APPROVED PRIOR TO CONTRACT COMPLETION.

816 CONCRETE FOR SIGN SUPPORT FOUNDATIONS, BY TYPE

FOUNDATIONS SHALL BE CONSTRUCTED IN THE MANNER CALLED FOR UNDER SUPPLEMENTAL SPECIFICATION 816. CONCRETE SHALL BE CLASS "C".

PAYMENT FOR THIS ITEM SHALL BE PER CUBIC YARD BASED ON APPROVED PLAN DIMENSIONS OR DIMENSIONS AS MODIFIED BY THE ENGINEER IN LIEU OF PLAN QUANTITIES AS SPECIFIED IN SUPPLEMENTAL SPECIFICATION 816.

816 OVERHEAD SIGN SUPPORT, BY TYPE

ALL COMPONENT PARTS OF THE OVERHEAD SIGN SUPPORTS SHALL BE STEEL. FOR SPECIFIC DETAILS AND MATERIALS, SEE SHEET NUMBER 19.

COST OF FURNISHING AND INSTALLING THE SIGN BRACKETS AND THE FIXTURE SUPPORT ARM, LENGTH "G", WITH MOUNTING HOLES AND HARDWARE SHALL BE INCLUDED IN THE CONTRACT UNIT PRICE BID FOR OVERHEAD SIGN SUPPORTS.

MODIFYING SUPPLEMENTAL SPECIFICATION 816 SWITCH ENCLOSURE MOUNTING BRACKETS INCLUDING MOUNTING BOLTS AND DRILLED HOLES SHALL BE FURNISHED AND INSTALLED UNDER PAYMENT FOR 816 OVERHEAD SIGN SUPPORT STRUCTURES AT THE CONTRACT PRICE PER OVERHEAD SIGN SUPPORT, BY TYPE.

PAYMENT FOR THIS ITEM SHALL BE MADE AT THE CONTRACT UNIT PRICE BID FOR EACH OVERHEAD SIGN SUPPORT, BY TYPE, INSTALLED IN PLACE AND ACCEPTED, WHICH PRICE SHALL BE FULL COMPENSATION FOR FURNISHING AND INSTALLING EACH OVERHEAD SIGN SUPPORT STRUCTURE SHOWN ON SHEET 14 INCLUDING FIXTURE SUPPORT ARMS, SWITCH ENCLOSURE MOUNTING BRACKET, SIGN BRACKETS AND ALL COMPONENT PARTS NECESSARY TO MAKE A COMPLETE WORKABLE INSTALLATION READY FOR SIGN ERECTION, INSTALLATION OF DISCONNECT SWITCH AND ENCLOSURE, GROUND CONNECTIONS AS PER STRUCTURE GROUNDING SYSTEM, AND SIGN WIRING.

ERECTION OF THESE SUPPORTS SHALL BE ACCOMPLISHED IN A MANNER MEETING THE REQUIREMENTS OF SUPPLEMENTAL SPECIFICATION 816.

815 SIGN ERECTION, BY TYPE

THE CONTRACTOR SHALL ERECT SIGN PANELS FURNISHED BY OTHERS AS NOTED ON THE SCHEMATIC SIGNING LAYOUT SHEET NUMBER 14. THE PANELS SHALL BE MOUNTED ON THE BRACKETS OR BEAM SUPPORTS PROVIDED IN THE PLANS.

A SCHEDULE FOR SIGN ERECTION SHALL BE SUBMITTED TO THE ENGINEER 60 CALENDAR DAYS PRIOR TO THE START OF ANY SCHEDULED ERECTION WORK. THE SCHEDULE SHALL INCLUDE PROPOSED DATES, TIME, SIGN NUMBERS AND DELIVERY POINT.

THE PRICE BID PER SQUARE FOOT FOR, "ITEM 815, SIGN ERECTION, BY TYPE", SHALL INCLUDE ALL NECESSARY EQUIPMENT, MANPOWER AND TOOLS TO ERECT THE SIGNS NOTED. ALL SIGN MATERIAL AND ACCESSORIES WILL BE FURNISHED AND TRANSPORTED TO A DESIGNATED DELIVERY POINT, ON OR NEAR THE SUBJECT PROJECT BY OTHERS.

THE CONTRACTOR SHALL BE RESPONSIBLE FOR THE HANDLING AND STORAGE OF THE SIGN PANELS AND ACCESSORIES FROM THE TIME OF ARRIVAL AT THE DELIVERY POINT.

ELECTRICAL - GENERAL

THIS ITEM SHALL CONSIST OF FURNISHING ALL NECESSARY MATERIAL, LABOR AND FACILITIES REQUIRED TO COMPLETE THE ELECTRICAL INSTALLATION IN ACCORDANCE WITH THE DESIGNS, DIMENSIONS AND DETAILS SHOWN IN THE PLANS AND DESCRIBED IN THE SPECIFICATIONS.

ALL MATERIAL, WORKMANSHIP AND CONSTRUCTION METHODS, EXCEPT AS MODIFIED HEREIN, SHALL CONFORM TO THE GENERAL REQUIREMENTS OF THE STATE OF OHIO, DEPARTMENT OF HIGHWAYS, CONSTRUCTION AND MATERIALS SPECIFICATIONS, JANUARY 1, 1967.

625 DISCONNECT SWITCH WITH TYPE "Y" OR "Z" ENCLOSURE

THIS ITEM SHALL INCLUDE FURNISHING OF A 30 AMP. 600 VOLT FUSED DISCONNECT SWITCH OF TYPE AND MAKE AS INDICATED ON SHEET 17 AND SHALL BE MOUNTED IN A NEMA 4 STAINLESS STEEL ENCLOSURE TYPE "Y" OR "Z" AND ATTACHED TO EACH SIGN SUPPORT BY MEANS OF A MOUNTING BRACKET AS DESCRIBED IN DETAIL ON THE ABOVE SHEET.

EACH SWITCH ENCLOSURE SHALL BE FURNISHED WITH ONE PADLOCK. PADLOCKS SHALL HAVE A BRASS BODY AND WROUGHT IRON SHACKLE EQUAL TO RUSSWIN NO. 2882 KA OR MASTER NO. 4 KA OR APPROVED EQUAL.

BASIS OF PAYMENT FOR THIS ITEM SHALL BE PER EACH AT CONTRACT UNIT PRICE, WHICH SHALL INCLUDE ALL LABOR, MATERIAL, AND EQUIPMENT TO COMPLETE THIS ITEM AT WORK.

625 TRANSFORMER, BY TYPE

THIS ITEM OF WORK SHALL CONSIST OF FURNISHING AND INSTALLING TRANSFORMERS AS DETAILED AND SPECIFIED ON SHEET 17.

BASIS OF PAYMENT FOR THIS ITEM SHALL BE AT CONTRACT UNIT PRICE PER EACH, WHICH SHALL INCLUDE ALL LABOR, MATERIAL AND EQUIPMENT REQUIRED FOR THIS COMPLETE ITEM OF WORK.

625 BALLAST, BY TYPE

BALLAST FOR FIXTURES SHALL BE WEATHER-PROOF OUTDOOR TYPE FOR A 120 VOLT 60 CYCLE SYSTEM AND SHALL PROVIDE LAMP STARTING AT AN AMBIENT TEMPERATURE OF -20 DEGREES F.

THIS ITEM OF WORK SHALL CONSIST OF FURNISHING ALL BALLAST TYPES A THROUGH D AS DETAILED AND SPECIFIED ON SHEET 15.

BASIS OF PAYMENT FOR THIS ITEM SHALL BE AT CONTRACT UNIT PRICE PER EACH, FURNISHED TO THE JOB FOR INSTALLATION UNDER ITEM 625 "SIGNS WIRED, COMPLETE".

625 LIGHT FIXTURE WITH LAMP, BY TYPE AND SIZE

THIS ITEM OF WORK SHALL CONSIST OF FURNISHING ALL LIGHT FIXTURES AND LAMPS, TYPES AND SIZES AS SPECIFIED ON SHEET 15.

BASIS OF PAYMENT FOR THIS ITEM SHALL BE AT CONTRACT UNIT PRICE PER EACH, FURNISHED TO THE JOB FOR INSTALLATION UNDER ITEM 625 SIGNS WIRED, COMPLETE.

GROUNDING SYSTEM

THIS WORK SHALL CONSIST OF FURNISHING AND INSTALLING THE GROUNDING SYSTEM AS PER SUPERSTRUCTURE DETAILS.

BASIS OF PAYMENT FOR THIS WORK SHALL BE INCLUDED IN THE LUMP SUM BID PRICE FOR STRUCTURE GROUNDING SYSTEM, WHICH SHALL INCLUDE ALL LABOR, MATERIALS, AND EQUIPMENT REQUIRED TO COMPLETE THIS WORK.

625 SIGNS WIRED, COMPLETE

THIS ITEM SHALL CONSIST OF THE COMPLETION OF THE ELECTRICAL SIGN LIGHTING SYSTEM FOR EACH ILLUMINATED SIGN.

WORK SHALL INCLUDE INSTALLATION OF LIGHT FIXTURES AND BALLASTS, AND FURNISHING AND INSTALLATION OF ALL RIGID AND FLEXIBLE CONDUIT, CONDULETS, JUNCTION BOXES, CABLE, FASTENERS, HARDWARE, AND ALL OTHER ITEMS REQUIRED TO ENERGIZE THE SIGN LIGHTING SYSTEM. SEE DETAILS ON SHEETS (EI-1 & 2, ES - 3A).

THE COST OF FURNISHING AND INSTALING CABLE, CABLE GRIPS, CABLE SPLICE UNITS, AND NECESSARY FASTENERS FROM THE DISCONNECT SWITCH TO THE SIGNS (OR BETWEEN SIGNS) WITHIN SIGN SUPPORT MEMBERS SHALL BE INCLUDED IN THIS ITEM OF WORK.

BASIS OF PAYMENT SHALL BE AT THE CONTRACT UNIT PRICE PER EACH SIGN WIRED WHICH PRICE SHALL INCLUDE ALL LABOR, MATERIALS, TOOLS, EQUIPMENT, AND OTHER INCIDENTALS TO PROVIDE A COMPLETE AND ACCEPTED ITEM OF WORK.

ILLUMINATED SIGNS REQUIRING TWO (2) BALLASTS SHALL BE CONSIDERED AS AN EQUIVALENT OF TWO (2) SEPARATE SIGNS FOR DETERMINATION OF PAYMENT QUANTITIES.

INSPECTION AND TESTING OF SIGN LIGHTING

UPON CONNECTION OF THE OVERHEAD POWER FEED BY OHIO EDISON COMPANY, TO THE CONDUIT AT THE WEATHERHEAD, THE CONTRACTOR SHALL TEST THE LIGHTING SYSTEM.

THE CONTRACTOR SHALL FURNISH ALL EQUIPMENT NECESSARY TO DEMONSTRATE TO THE ENGINEER THAT ALL CIRCUITS ARE FREE FROM SHORT CIRCUITS AND UNSPECIFIED GROUNDS, AND ARE PROPERLY CONNECTED AND OPERABLE BEFORE ACCEPTANCE. THIS DEMONSTRATION SHALL INCLUDE A MEGGARING TEST TO SHOW THAT ALL CONDUCTORS ARE CLEAR OF GROUNDS AND THAT THE RESISTANCE AT THE GROUND IS NOT MORE THAN 25 OHMS. VOLTAGE AND AMPERAGE TESTS SHALL BE MADE AT THE SIGN SUPPORT SWITCH.

PAYMENT FOR THESE TESTS SHALL BE CONSIDERED A SUBSIDIARY WORK ITEM, INCLUDED IN THE UNIT PRICE BID FOR THE RESPECTIVE ITEMS TESTED.

THE LIGHTING SYSTEM SHALL BE OPERATED CONTINUOUSLY EACH NIGHT UNTIL SEVEN (7) CONSECUTIVE DAYS ELAPSE WITHOUT FAILURE OR DEFECT. THE CONTRACTOR SHALL CORRECT ANY DEFECTS WHICH MAY DEVELOP AT NO EXTRA COST TO THE STATE.

DURING THE TEST PERIOD, ADJUSTMENTS TO FIXTURE AIMING ANGLES SHALL BE MADE AS DIRECTED BY THE ENGINEER TO OBTAIN MAXIMUM UNIFORMITY IN SIGN ILLUMINATION.

816 ALTERNATE DESIGNS FOR OVERHEAD SIGN SUPPORTS

IF THE CONTRACTOR DESIRES TO FURNISH AN ALTERNATE DESIGN FOR OVERHEAD SIGN SUPPORTS, THE ALTERNATE DESIGNS MUST BE SUBMITTED TO THE STATE AT LEAST 21 DAYS PRIOR TO OPENING OF BIDS. THE BIDDER WILL BE NOTIFIED AS TO ACCEPTANCE OR REJECTION OF ALTERNATE DESIGN AT LEAST 7 DAYS BEFORE BIDS ARE TO BE OPENED. ALTERNATE DESIGNS MUST UTILIZE TUBULAR STRUCTURAL MEMBERS. SUBMISSIONS SHALL BE MADE TO OHIO DEPARTMENT OF HIGHWAYS, BUREAU OF TRAFFIC, 450 EAST TOWN STREET, COLUMBUS, OHIO 43216.

625 SIGN SERVICE, COMPLETE AS PER PLAN

THIS ITEM SHALL CONSIST OF FURNISHING AND INSTALLING THE POWER SERVICE TO THE OVERHEAD SIGN AS SHOWN BY THE DETAIL ON SHEET NO. 23.

BASIS OF PAYMENT FOR THIS ITEM SHALL BE AT THE CONTRACT UNIT PRICE PER EACH FOR ITEM 625, SIGN SERVICES COMPLETE AS PER PLAN; WHICH SHALL INCLUDE ALL LABOR, MATERIALS, AND EQUIPMENT REQUIRED TO COMPLETE THIS ITEM.

FED. RD. DIVISION	STATE	PROJECT	
2	OHIO	SU-1509(1)	

OBERLIN ROAD VIADUCT

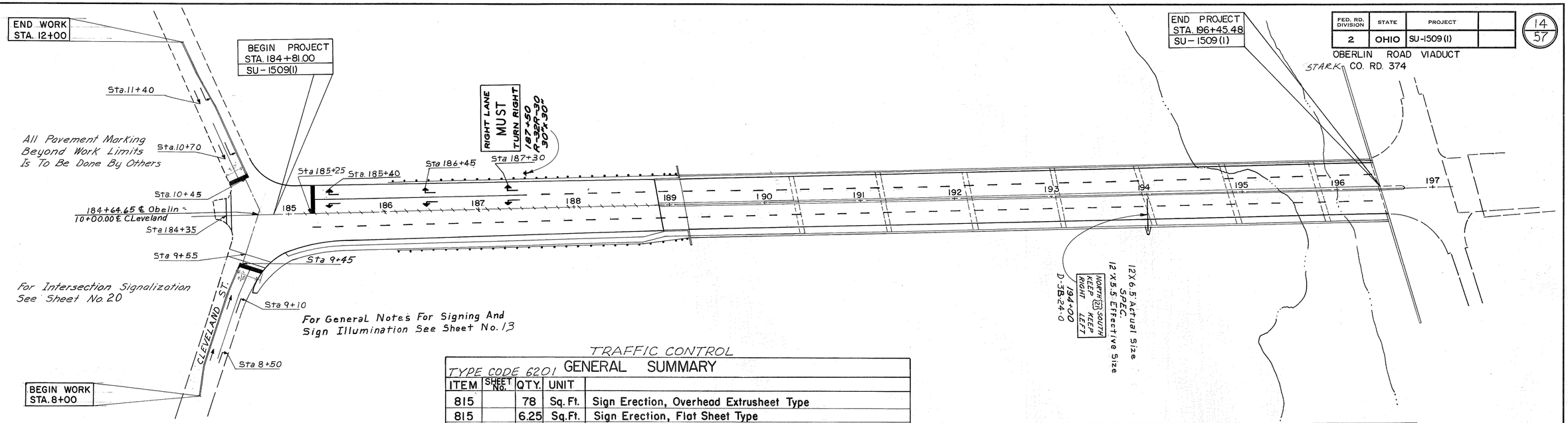

For Intersection Signalization See Sheet No. 20

For General Notes For Signing And Sign Illumination See Sheet No. 13

SIGN ILLUMINATION ITEMS

2-72" HO Fixture
1-B Ballast
1-Type II Transformer
1-"Y" Enclosure

TRAFFIC CONTROL

TYPE CODE 6201 GENERAL SUMMARY

ITEM	SHEET No.	QTY.	UNIT	
815		78	Sq. Ft.	Sign Erection, Overhead Extrusheet Type
815		6.25	Sq.Ft.	Sign Erection, Flat Sheet Type
816		16	Lin.Ft.	Steel Drive Post 4 Lbs. Per. Ft.
816		1	Each	Overhead Sign Support No.12.24 Design No.1 Modified 16'Arm
816		0.1	Cu.Yds.	Concrete For Sign Support Foundations
621		0.24	Mile	4" Lane Line
621		225	Lin.Ft.	8" Channelizing Line
621		600	Lin.Ft.	4" Double Yellow Barrier Line
621		135	Lin.Ft.	12" Crosswalk, As Per Plan
621		Lump	Lump	24" Stop Lines
621		14	Each	Pavement Arrows, As Per Plan
625		2	Each	72" Lighting Fixture With HO Lamps
625		1	Each	Sign Ballast Type B
625		1	Each	Transformer Type II
625		1	Each	30 Amp Fusible Disconnect Switch With Type "Y" Enclosure
625		1	Each	Sign Services Complete, as Per Plan
625		1	Each	Sign Wired Complete

SIGNING & STRIPING QUANTITIES

	STATION FROM	STATION TO	SIDE	815 SIGNS R-32 R-30 30"x30" FLAT SHEET	815 SIGNS ERRECTION SPEC. 6.5X12	816 SUPPORTS 4 Lb. POST	816 SUPPORTS 12.24 Des Mod. 16' Arms	816 SUPPORTS FOUNDATION CONC.	621 STRIPING 4" YELLOW BARRIER LINE	621 STRIPING 8" CHANNELIZING LINE	621 STRIPING 4" LANE LINE	621 STRIPING 12" CROSS-WALKS	621 STRIPING 24" STOP LINES	621 STRIPING PAVEMENT ARROWS *
				Eq. Ft.²	Eq. Ft.²	Lin. Ft.	Each	C.Y.	Lin. Ft.	Lin. Ft.	Mile	Lin. Ft.	Lump	Each
OBERLIN		187+50	Lt.	1/6.25		16.		0.1						
ROAD		194+00	Rt.		1/78		1							
CLEVELAND STREET	8+00	9+45	℄						290				Lump	4
"	10+45	12+00	℄						310				Lump	4
"	9+55											84		
OBERLIN RD.	185+25	187+50	Lt.							225			Lump	6
"	187+50	196+45	Lt.								0.11			
"	185+25	196+45	Rt.								0.13			
"	184+35											51		
TOTAL				1	1	16	1	0.1	600	225	0.24	135	Lump	14
TOTAL SQ. FT.				6.25	78									

* See Pavement Arrow Details on Sheet 21.

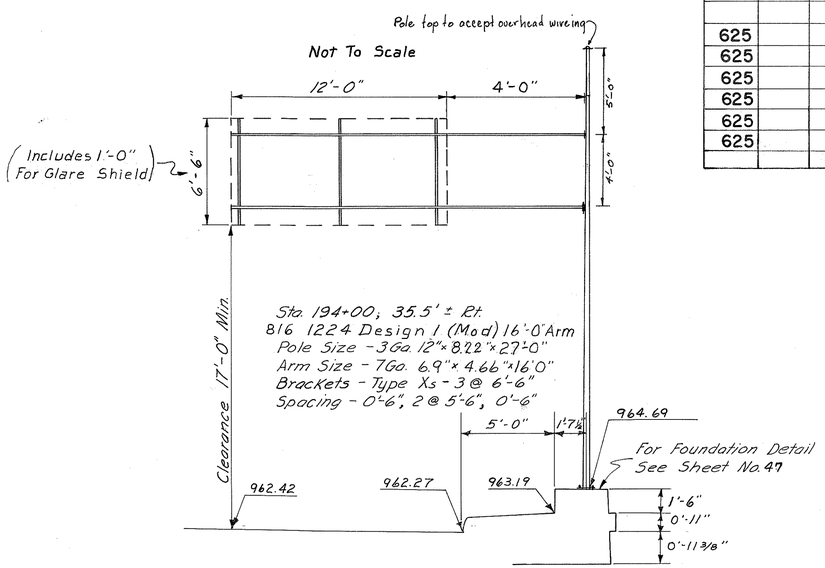

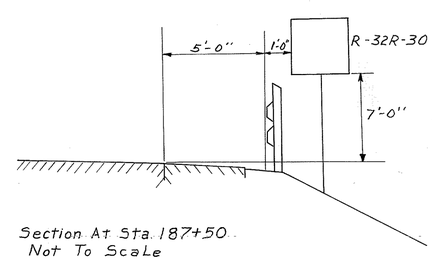

Section At Sta. 187+50
Not To Scale

PAVEMENT ARROWS

Pavement Arrows shall be solid white, beaded. They shall be located as shown on the plan. Paint and bead shall be applied in accordance with Item 621. Payment for this item of work shall be on the unit price bid per each.

12" Crosswalk

Crosswalk Lines shall be continuous white beaded stripes, 12" in width. They shall be located as shown in the plans. Paint and bead shall be applied in accordance with Item 621. Payment for this item of work shall be on the unit price bid per lin. foot.

FED. RD. DIVISION	STATE	PROJECT	
2	OHIO	SU-1509 (1)	

15/57

OBERLIN ROAD VIADUCT
STARK COUNTY ROAD 374

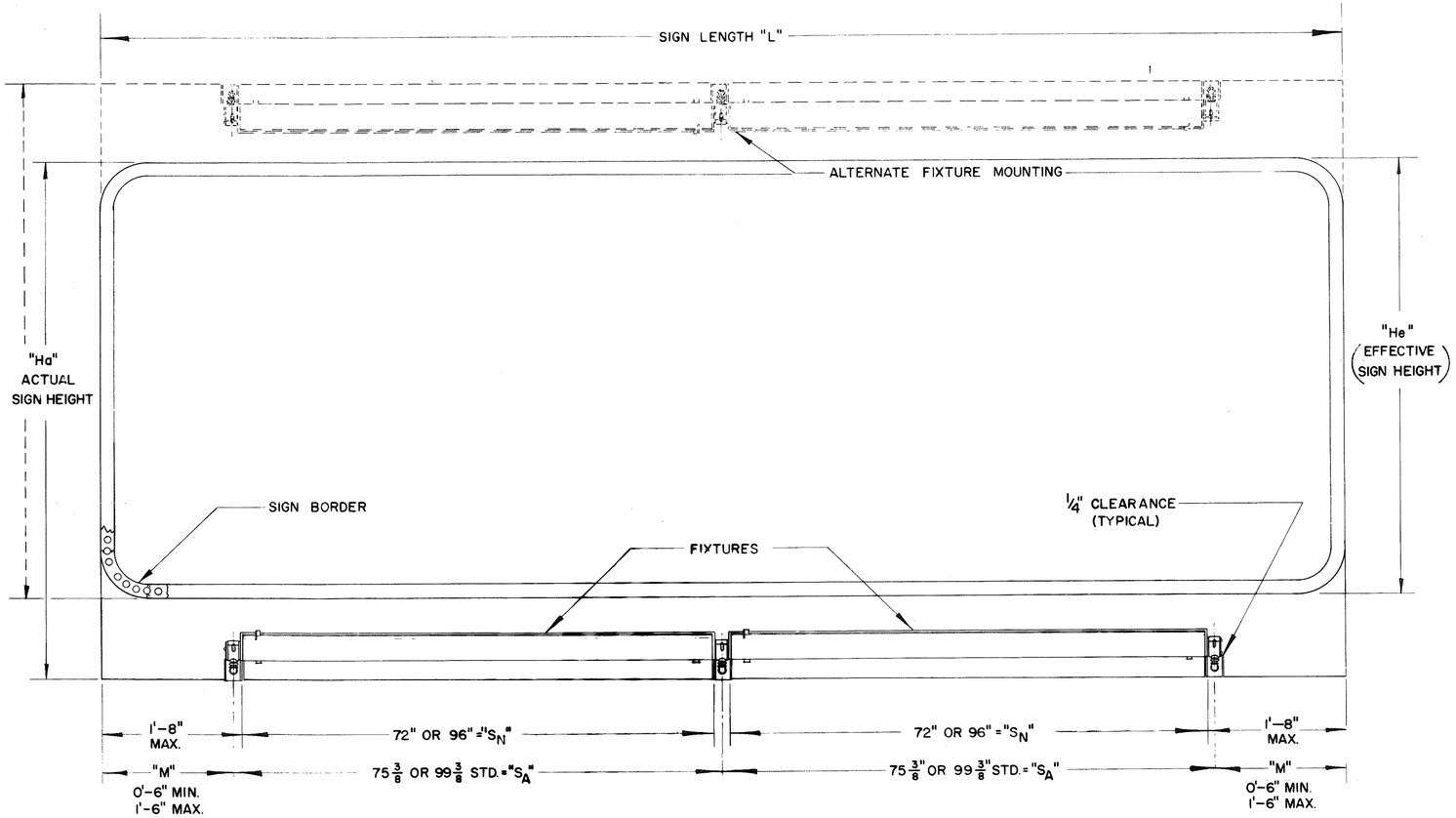

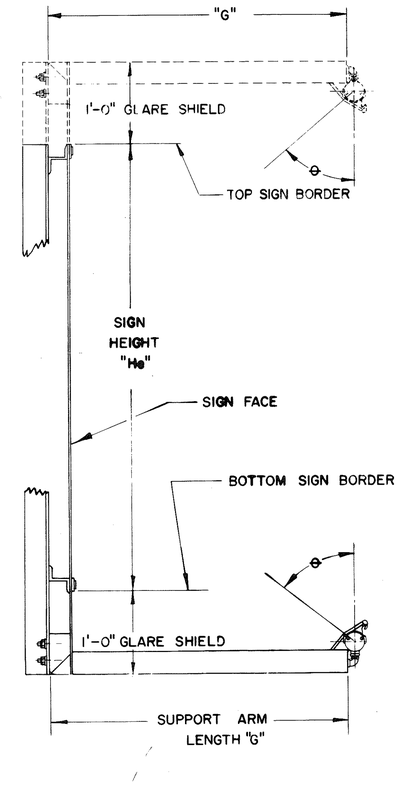

SIGN LIGHTING NOTES

SIGN ILLUMINATION

SIGN ILLUMINATION SHALL BE BY ATTACHED FLUORESCENT FIXTURES AS SHOWN ON ILLUMINATED SIGN DETAIL SHEETS.

LAMPS

LAMPS SHALL BE TYPE F72 OR F96-T12/CW/HO AS MANUFACTURED BY WESTINGHOUSE, GENERAL ELECTRIC OR APPROVED EQUAL FOR SIGNS TO A MAXIMUM HEIGHT OF 6'-6". LAMP TYPE SHALL BE F72 OR F96-T12/CW/SHO AS MANUFACTURED BY WESTINGHOUSE, SYLVANIA OR GENERAL ELECTRIC OR APPROVED EQUAL FOR SIGNS THAT ARE 7'-0" OR GREATER IN HEIGHT.

LAMP FIXTURES

LIGHTING FIXTURES SHALL BE CONSTRUCTED OF CORROSION RESISTANT MATERIALS OR WITH HIGH QUALITY CORROSION RESISTANT FINISH. ALL FIXTURES SHALL BE SPECIFICALLY DESIGNED FOR OUTDOOR SIGN LIGHTING SERVICE. MAJOR COMPONENTS SHALL INCLUDE WEATHERPROOF CAST ALUMINUM MOUNTING HUBS DESIGNED TO SECURELY LOCK THE FIXTURES AT ANY ANGLE THROUGH 360 DEGREES. INDICATORS IN 10 DEGREE INCREMENTS SHALL BE STAMPED OR CAST INTO THE HUB TO FACILITATE PROPER AIMING OF THE FIXTURE. FINAL ADJUSTMENT OF FIXTURE SHALL BE DONE AT NIGHT UNDER THE PROJECT ENGINEER'S DIRECTION.

THE BODY DESIGN OF THE FIXTURE SHALL PROVIDE AN ASYMMETRIC SPECULAR ALZAK REFLECTOR TO GIVE A HIGH LEVEL OF UNIFORM ILLUMINATION AND SHALL PROVIDE A WIREWAY FROM END TO END. WHEN ADJACENT FIXTURES ARE WIRED TOGETHER THROUGH THE WIREWAY, WIRE BETWEEN FIXTURES SHALL BE ENTIRELY ENCLOSED.

EXTERIOR FINISH OF THE FIXTURE BODY SHALL BE INTERSTATE GREEN COLOR, HEAT RESISTANT BAKED ENAMEL AS #8950 UNIVERSAL PAINT AND VARNISH INC. MIDWEST COLOR WORKS, OR APPROVED EQUAL. REFLECTOR, LAMP AND SOCKETS SHALL BE PROTECTED BY A HINGED DOOR OF CLEAR ACRYLIC PLASTIC WITH ALUMINUM OR STAINLESS STEEL FRAME AND NEOPRENE GASKETING.

BALLASTS

BALLASTS FOR FIXTURES SHALL BE WEATHER-PROOF OUTDOOR TYPE FOR A 120 VOLT 60 CYCLE SYSTEM AND SHALL PROVIDE LAMP STARTING AT AN AMBIENT TEMPERATURE OF -20°F. BALLASTS SHALL BE MOUNTED ON SIGN BRACKET ONLY. WIRING SHALL BE ACCOMPLISHED IN SUCH A MANNER THAT THE SIGN MAY BE REMOVED WITHOUT DISTURBING THE ELECTRICAL WIRING.

EFFECTIVE SIGN HEIGHT "H"	SUPPORT ARM LENGTH "G"	APPROX. AIMING ANGLE θ
3'-0" to 5'-0"	2'-9"	25°
5'-0" to 6'-6"	3'-3"	25°
7'-0" to 10'-0"	4'-3"	17°
10'-6" to 13'-0"	5'-9"	23°

"L" SIGN LENGTH	NO. OF FIXTURES			He=3'-0" to 6'-6" LAMP=T12/cw/ho			He=7'-0" to 13'-0" LAMP=T12/cw/sho		
	72	96		BALLAST NO.	BALLAST TYPE	WATTAGE PER SIGN	BALLAST NO.	BALLAST TYPE	WATTAGE PER SIGN
6'-0" to 7'-0"	1			1	A	190	1	C	250
8'-0" to 9'-0"	1			1	A	190	1	C	250
10'-0" to 11'-0"			1	1	A	190	1	C	250
12'-0" to 13'-0"	2			1	B	250	1	D	425
14'-0" to 15'-0"	2			1	B	250	1	D	425
16'-0" to 17'-0"	1	1		1	B	250	1	D	425
18'-0" to 19'-0"		2		1	B	250	1	D	425
20'-0" to 21'-0"	3			2	A & B	440	2	C & D	675
22'-0" to 23'-0"	2	1		2	A & B	440	2	C & D	675
24'-0" to 25'-0"	1	2		2	A & B	440	2	C & D	675
26'-0" to 27'-0"		3		2	A & B	440	2	C & D	675

BALLASTS

TYPE	MANUFACTURERS G.E.	MANUFACTURERS JEFFERSON	WATTAGE
A	6G 3583	257-321	190
B	6G 3535	257-331	250
C	6G 3585	257-361	250
D	6G 3588	257-371	425

BALLASTS SHALL BE GENERAL ELECTRIC, JEFFERSON AS SPECIFIED ABOVE OR EQUAL.

BUREAU OF TRAFFIC
OHIO DEPARTMENT OF HIGHWAYS

ELECTRICAL DETAILS FOR EXTERNALLY ILLUMINATED SIGNS

EI-2

DATE 10-31-63 5-6-64 10-29-64

APPROVED Fred C. Talbot
ENGINEER OF TRAFFIC

FED. RD. DIVISION	STATE	PROJECT	
2	OHIO	SU-1509(1)	

16/57

OBERLIN ROAD VIADUCT
STARK COUNTY ROAD 374

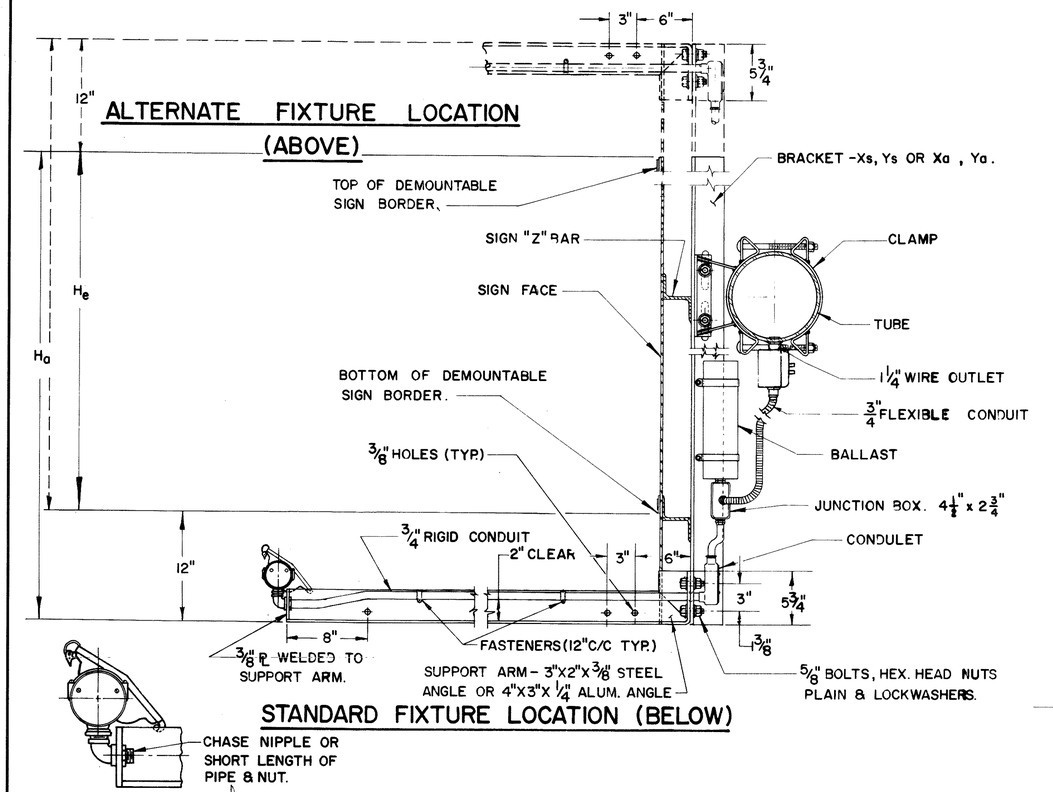

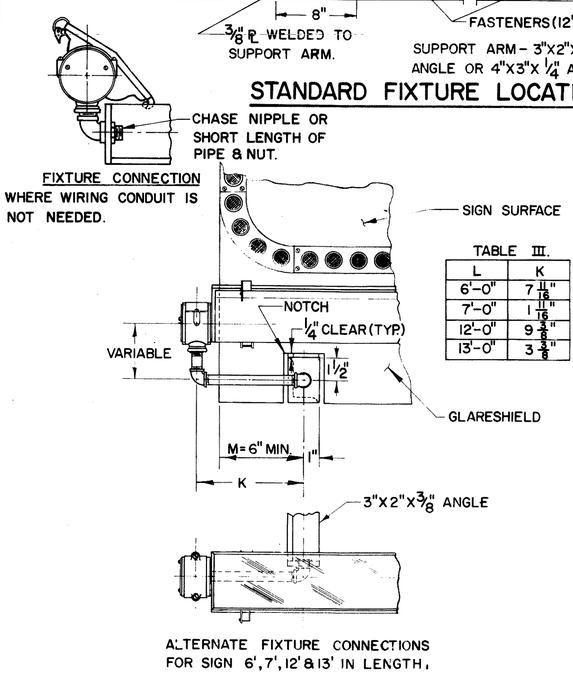

TABLE III.

L	K
6'-0"	7 11/16"
7'-0"	1 11/16"
12'-0"	9 3/8"
13'-0"	3 3/8"

DETAIL A.

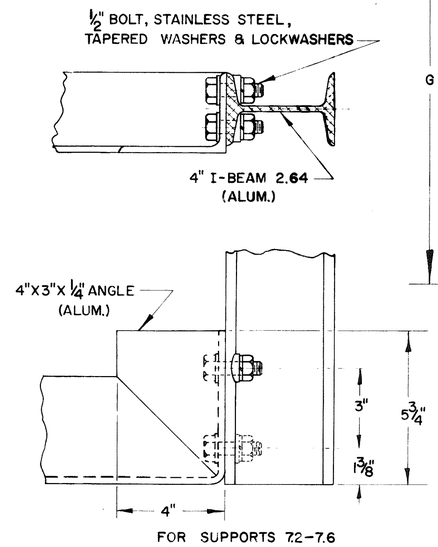

DETAIL B.

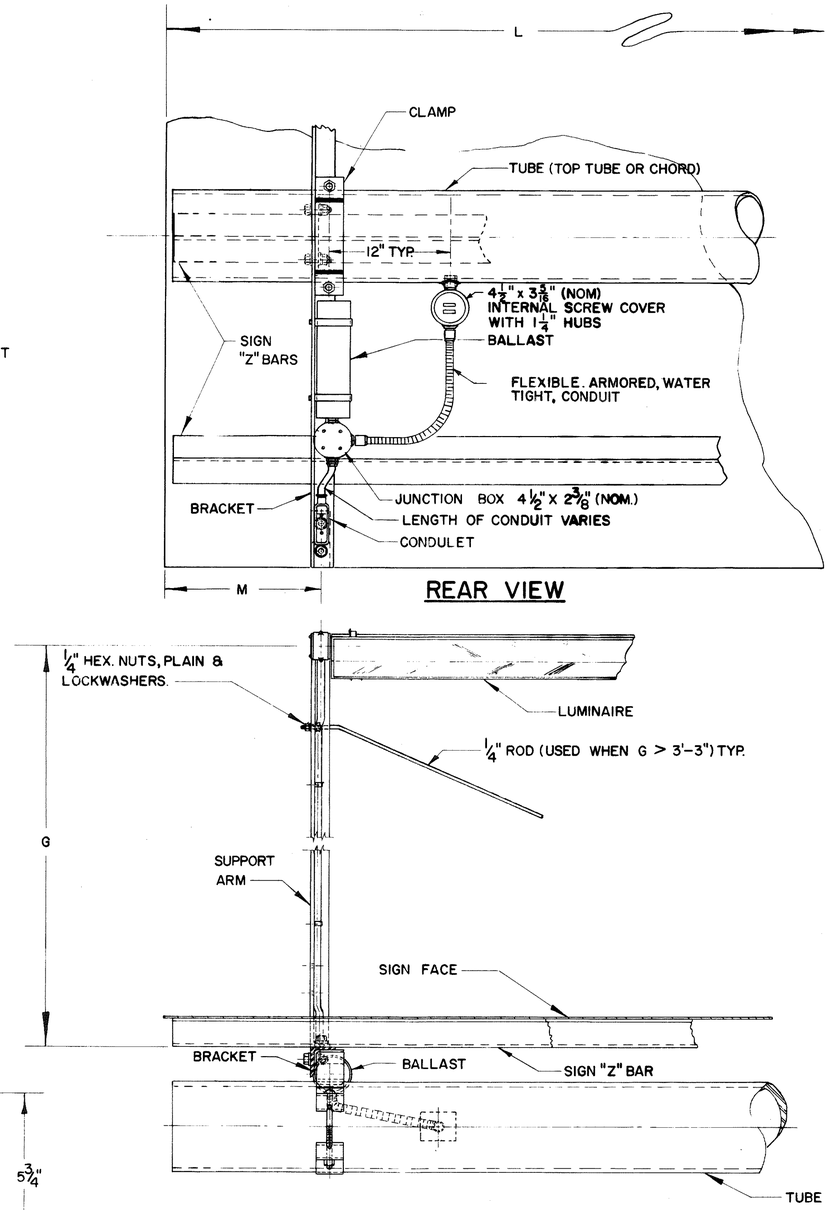

TABLE I.

"L" SIGN LENGTH A	"L" SIGN LENGTH B	NUMBER OF FIXTURES 75%	NUMBER OF FIXTURES 99%	"M" EDGE DISTANCE A LT.	"M" EDGE DISTANCE A RT.	"M" EDGE DISTANCE B LT.	"M" EDGE DISTANCE B RT.	NO. BALLAST
6'-0"	7'-0"	1		6"	6"	6"	6"	1
8'-0"	9'-0"	1		10 3/8"	10 1/4"	16 3/8"	16 1/4"	1
10'-0"	11'-0"		1	10 3/8"	10 1/4"	16 3/8"	16 1/4"	1
12'-0"	13'-0"	2		6"	6	6	6	1
14'-0"	15'-0"	2		8 5/8"	8 5/8"	14 5/8"	14 5/8"	1
16'-0"	17'-0"	1	1	8 5/8"	8 5/8"	14 5/8"	14 5/8"	1
18'-0"	19'-0"		2	8 5/8"	8 5/8"	14 5/8"	14 5/8"	1
20'-0"	21'-0"	3		7"	6 7/8"	13	12 7/8"	2
22'-0"	23'-0"	2	1	7"	6 7/8"	13	12 7/8"	2
24'-0"	25'-0"	1	2	7"	6 7/8"	13	12 7/8"	2
26'-0"	27'-0"		3	7"	6 7/8"	13	12 7/8"	2

Sn= Nominal Fixture Length, 72" & 96" respectively.
Sa= Actual Fixture Length, for mounting purposes, 75 5/8" and 99 5/8" respectively. (Slight variation for different manufacturers.)
M= Distance from edge of sign to ℄ of notch, min. 6". When the length of the sign minus 1'-0" is less than the sum of the actual fixture lengths, an offset "K" is used. For additional details see detail A and table III.

TABLE II

MAX. BRACKET SPACING FOR EXTERNALLY ILLUMINATED SIGNS

ACTUAL SIGN HEIGHT "Ha"	SUPPORT TYPES: 9.12, 11.08, 13.2, 7.2 — SINGLE TUBE DOUBLE TUBE LESS 36" C/C	9.24, 10.48, 12.24, 14.5, 15.8, 7.2 to 7.6 — DOUBLE TUBE C/C 36"-42"	C/C 48"-54"	C/C 60"-72"
	MAXIMUM BRACKET SPACING			
to 5'-0"	6'-4" with X 8'-4" with Y	8'-4" with X	8'-4" with X	8'-4" with X
5'-6" to 8'-0"	6'-4" with Y	4'-2" with X 6'-4" with Y	6'-4" with X 8'-4" with Y	8'-4" with X
8'-6" to 10'-0"	3'-2" with X 4'-2" with Y	6'-4" with Y	6'-4" with Y	8'-4" with Y
10'-6" to 12'-0"	———	4'-2" with Y	6'-4" with Y	6'-4" with Y
12'-6" to 14'-0"	———	3'-2" with Y	3'-2" with Y	4'-2" with Y

Ha= ACTUAL SIGN HEIGHT
He= EFFECTIVE SIGN HEIGHT
BRACKET SIZE: Xs = 3 1/2" X 2 1/2" X 5/16" — L @ 6.1 LB. STEEL; Ys = 4" X 3 1/16" X 1/4" — Z @ 8.2 LB. STEEL } 9.12, 10.48, 11.08, 12.24, 14.5 & 15.8
Xa = 3" X 2 1/16" X 1/4" — Z @ 2.33 LB. ALUM.; Ya = 4" X 2 3/32" X 3/16" — I @ 2.64 LB. ALUM. } 7.2 Thru 7.6

WHEN MAX. ALLOWABLE SPACING IS LESS THAN ACTUAL FIXTURE LENGTHS, Sa, ADDITIONAL STANDARD BRACKETS MUST BE FURNISHED, EQUAL IN HEIGHT TO "Ha".

SUPPORTS 7.2 THROUGH 7.6 SHALL HAVE AN ALUMINUM FIXTURE ARM, 4"x3"x1/4" ANGLE. SEE DETAIL B. BOLTS AND ACCESSORIES SHALL BE STAINLESS STEEL.

FABRICATION — ALL STRUCTURAL COMPONENTS SHOWN ON THIS SHEET SHALL CONFORM TO SUPPLEMENT SPECIFICATIONS 816 .

MATERIALS — THE MATERIALS USED IN THE COMPONENTS SHOWN ON THIS SHEET SHALL BE IN CONFORMANCE WITH THE MATERIALS USED IN THE SIGN SUPPORT.

BUREAU OF TRAFFIC
OHIO DEPARTMENT OF HIGHWAYS

STRUCTURAL DETAILS FOR EXTERNALLY ILLUMINATED SIGNS

EI-1

DATE 10-16-63 5-6-64 10-29-64

APPROVED Jack C. Parker
ENGINEER OF TRAFFIC

STRUCTURAL DETAILS FOR EXTERNALLY ILLUMINATED SIGNS

FED. RD. DIVISION	STATE	PROJECT	
2	OHIO	SU-1509(1)	

17/57

OBERLIN ROAD VIADUCT
STARK COUNTY ROAD 374

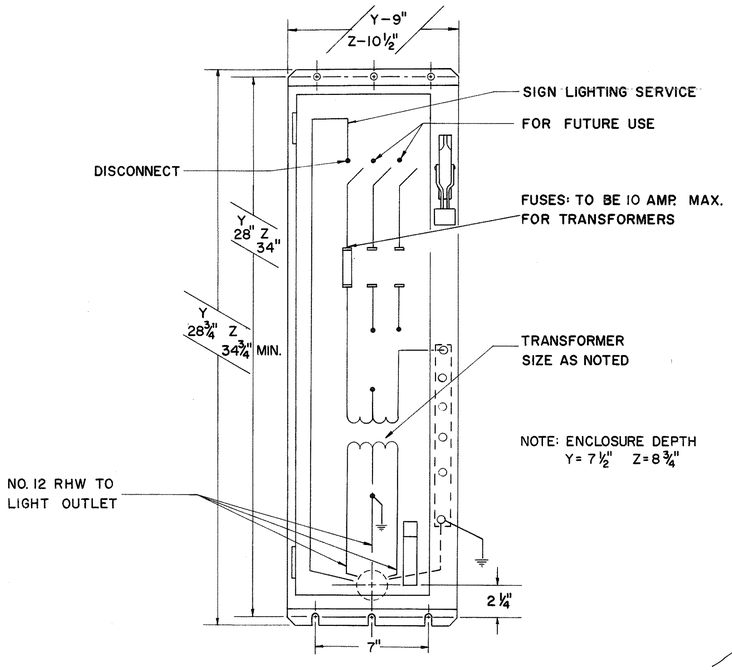

TYPICAL ENCLOSURE DETAIL

480 VOLT SIGN LIGHTING SERVICE

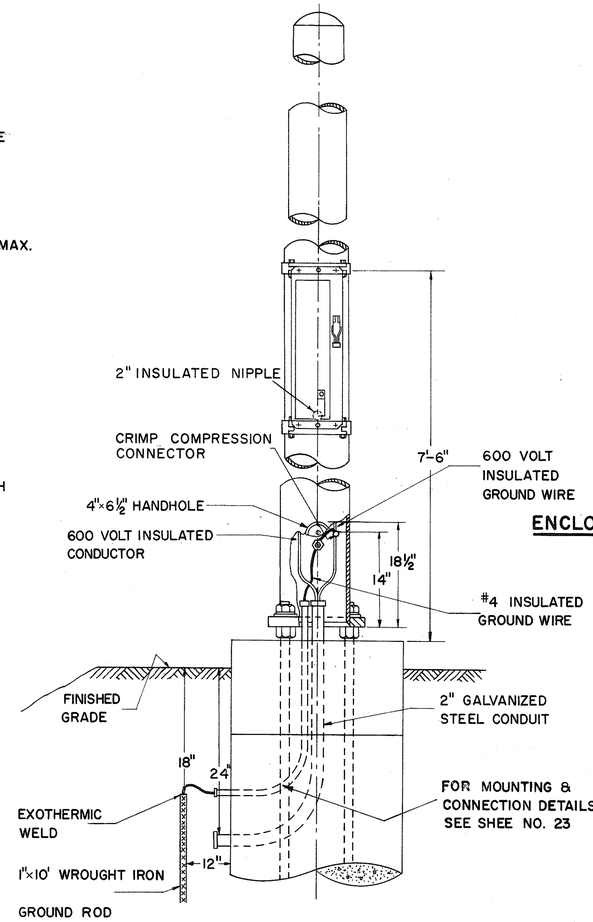

SIGN SUPPORT DETAIL FOR ILLUMINATED SIGNS

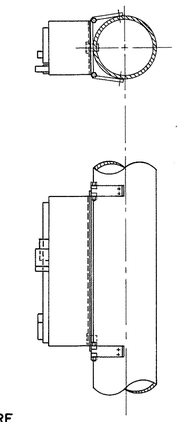

ENCLOSURE MOUNTING DETAIL

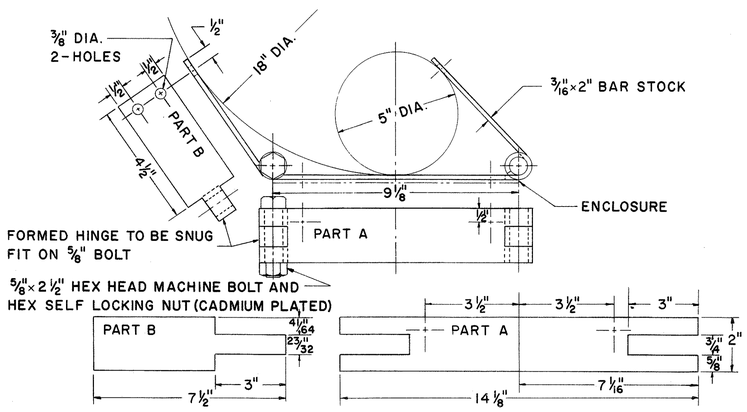

ENCLOSURE MOUNTING BRACKET

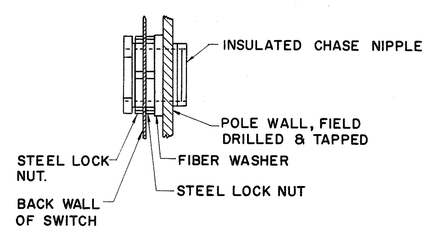

INSULATED CHASE NIPPLE ASSEMBLY

AS MANUFACTURED BY THOMAS BETTS, APPELTON, STEEL CITY OR EQUAL

NOTES

GENERAL

DETAILS OF THIS SHEET SHALL APPLY TO EACH OVERHEAD SIGN STRUCTURE TO SUPPORT EXTERNALLY ILLUMINATED SIGNS.

SERVICE

ELECTRIC SERVICE SHALL ENTER THROUGH A 2" GALVANIZED RIGID STEEL CONDUIT INSTALLED IN STRUCTURE FOUNDATION AS PER DETAIL. SIGN SERVICE OR CIRCUITRY SHALL BE CONTROLLED AS REQUIRED BY THE SYSTEM DESIGN AT THE PRIMARY SOURCE.

SERVICE CONDUCTORS SHALL BE THE SIZE AND TYPE AS SPECIFIED.

COMBINATION SWITCH AND TRANSFORMER

(TYPE Y OR Z ENCLOSURE REQUIRED AS PER SCHEDULE ON THIS SHEET)

THIS COMBINATION SHALL BE A 30 OR 60 AMPERE 600 VOLT SWITCH WITH A .25 TO 3.0 KVA TRANSFORMER. THE COMBINATION AND ENCLOSURE SHALL BE AS SQUARE D CLASS 9421, COLUMBUS ELECTRIC WORKS CLASS 101, PANALS INCORPORATED-CLASS 9400, OR APPROVED EQUAL.

TRANSFORMER

THE TRANSFORMER SHALL BE DRY TYPE SINGLE PHASE 240/480 VOLT PRIMARY 120/240 VOLT SECONDARY, THE TYPE AND CAPACITY AS SPECIFIED IN DETAILED SCHEDULE ON THIS SHEET.

ENCLOSURE

THE ENCLOSURE SHALL BE NEMA #4 WATER TIGHT .063 GAGE STAINLESS STEEL ASTA 302-303. A DISCONNECT HANDLE SHALL BE FLANGE MOUNTED AND CAPABLE OF BEING LOCKED IN EITHER POSITION. THE ENCLOSURE SHALL BE EQUIPPED WITH A DOOR LOCKING MECHANISM WITH A DEFEATER THAT NECESSITATES TWO HANDS TO OPERATE MECHANISM WITH THE SWITCH IN OFF POSITION. SPACE FOR A 2" INSULATED CHASE NIPPLE SHALL BE PROVIDED APPROXIMATELY 2¼" ABOVE THE CENTER LINE OF THE LOWER MOUNTING SLOT. THIS ENCLOSURE AND STRUCTURE SHALL BE FIELD DRILLED AND TAPPED FOR THE REQUIRED NIPPLE AS SHOWN ON THE DETAIL ON THIS SHEET.

THIS ENCLOSURE SHALL BE FLANGE MOUNTED ON BRACKETS WITH 5/16-18×¾" HEX HEAD CADMIUM PLATED MACHINE BOLTS. ENCLOSURES SHALL BE TYPE Y OR Z AS SPECIFIED AND DIMENSIONED ON THIS SHEET.

ENCLOSURE MOUNTING BRACKET

THE ENCLOSURE MOUNTING BRACKET SHALL BE FABRICATED THEN GALVANIZED BEFORE ASSEMBLY. THE BRACKET SHALL BE FIELD MOUNTED WITH 5/16" HEX HEAD SELF TAPPING CADMIUM PLATED SCREWS. THE SIGN SUPPORT SHALL BE FIELD DRILLED, AS PER DETAIL.

WIRE AND CABLE

ALL WIRE AND CABLE UP TO AND INCLUDING #4 SHALL COMPLY WITH FAA TYPE A SPECIFICATIONS. #2 OR LARGER WIRE OR CABLE SHALL BE G.E. 58006 OR ANACONDA AP-10711, OR EQUAL. ALL WIRE AND CABLE SHALL BE 600 VOLT.

GROUNDING

EACH SIGN SUPPORT OR STRUCTURE SHALL BE GROUNDED WITH A #4 RUBBER INSULATION AND NEOPRENE JACKETED CONDUCTOR. THE GROUNDING CONDUCTOR SHALL BE CONNECTED TO THE SWITCH THEN TO THE COMPRESSION CONNECTOR IN THE SIGN SUPPORT THEN TO A 1"×10' SOLID WROUGHT IRON GROUND ROD. GROUND CONDUCTOR SHALL BE EXOTHERMICALLY WELDED TO GROUND ROD AND THEN TAPED WITH PLASTIC ELECTRICAL TAPE AT EACH EXPOSED PORTION OF CONDUCTOR. THE WELDED CONNECTION AND TAPED PORTION SHALL BE PAINTED 2 COATS OF INSULATING ENAMEL.

TRANSFORMERS

TYPE	MANUFACTURERS G.E.	MANUFACTURERS JEFFERSON	OUTPUT K.V.A.	SWITCH TRANSFORMER ENCLOSURE
I	9T51Y7	220-241	.25	Y
II	9T51Y8	220-251	.50	Y
III	9T51Y9	220-261	.75	Y
IV	9T51Y10	220-071-100	1.00	Z
V	9T51Y11	220-081-100	1.50	Z
VI	9T51Y12	220-091-100	2.00	Z
VII	9T51Y13	221-102	3.00	Z

BUREAU OF TRAFFIC
OHIO DEPARTMENT OF HIGHWAYS

ELECTRICAL SIGN SERVICE DETAILS 480 VOLT SYSTEM

ES-3A

DATE 6-18-64
9-15

APPROVED _____
ENGINEER OF TRAFFIC

FED. RD. DIVISION	STATE	PROJECT	
2	OHIO	SU-1509(1)	

18/57

OBERLIN ROAD VIADUCT
STARK COUNTY ROAD 374

BEAM SIZE	ANCHOR BOLTS DIA.	ANCHOR BOLTS LENGTH	BASE PLATE	HOLE SIZE	DIM. M	DIM. N	DIM. P	WELD SIZE	DIM. H	DIM. W	CU. YDS. FOR 2 POST	MARK	TYPE	NO.	LENGTH	WEIGHT FOR 1 POST
10 B 11.5	3/4"	3'-0"	7/8"x6"x18"	7/8"	3 1/2"	14"	3 1/4"	1/4"	5.25'	2'-6"	1.9	401	101	6	7'-6"	45
												402	STR.	8	5'-0"	
10 B 17	1"	3'-6"	7/8"x6"x18"	1 1/8"	3 3/4"	14"	4 1/4"	1/4"	6.0'	2'-6"	2.2	401	101	7	7'-6"	52
												403	STR.	8	5'-9"	
12 B 22	1"	4'-0"	1"x9"x19"	1 1/8"	5 1/2"	15"	4 1/4"	1/4"	6.75'	2'-6"	2.5	401	101	8	7'-6"	61
												404	STR.	8	7'-0"	
12 WF 27	1 1/4"	4'-0"	1"x9"x19"	1 3/8"	5 1/2"	15"	5 1/4"	1/4"	8.0'	2'-6"	2.9	401	101	9	7'-6"	94
												501	STR.	8	8'-0"	
14 WF 30	1 1/4"	4'-0"	1"x11"x20"	1 3/8"	7 1/2"	16"	5 1/4"	5/16"	8.25'	2'-6"	3.0	401	101	10	7'-6"	101
												502	STR.	8	8'-6"	
14 WF 34	1 1/4"	4'-0"	1"x12"x22"	1 3/8"	9"	18"	5 1/4"	5/16"	9.0'	2'-6"	3.3	401	101	10	7'-6"	103
												503	STR.	8	8'-9"	
16 WF 36	1 1/2"	5'-0"	1 1/4"x14"x23"	1 5/8"	10"	19"	6"	5/16"	9.75'	2'-6"	3.5	401	101	11	7'-6"	145
												601	STR.	8	9'-3"	
16 WF 40	1 1/2"	5'-6"	1 1/4"x14"x24"	1 5/8"	10"	20"	6"	5/16"	10.0'	2'-6"	3.6	401	101	11	7'-6"	148
												602	STR.	8	9'-6"	
16 WF 45	1 1/2"	6'-0"	1 1/4"x14"x24"	1 5/8"	10"	20"	6"	5/16"	10.5'	2'-6"	3.8	401	101	11	7'-6"	155
												603	STR.	8	10'-0"	
18 WF 50	1 3/4"	7'-6"	1 1/2"x14"x26"	1 7/8"	10"	22"	6 3/4"	5/16"	11.5'	2'-6"	4.2	401	101	12	7'-6"	164
												604	STR.	8	10'-6"	

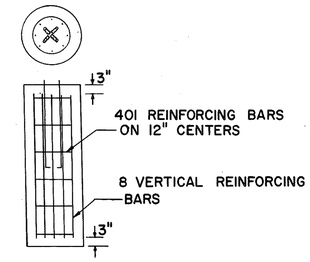

REINFORCING FOR ALTERNATE ANCHOR BASE

BEAM SIZE	DIM. W	DIM. H	CU. YDS. CONC. 2 POST
4# POST	1'-0"	4.0'	0.2
4# BEAM	1'-0"	4.0'	0.2
6# BEAM	1'-0"	4.0'	0.2
8# BEAM	1'-0"	4.0'	0.2
10 B 11.5	2'-6"	5.25'	1.9
10 B 17	2'-6"	6.0'	2.2
12 B 22	2'-6"	6.75'	2.5
12 WF 27	2'-6"	8.0'	2.9
14 WF 30	2'-6"	8.25'	3.0
14 WF 34	2'-6"	9.0'	3.3
16 WF 36	2'-6"	9.75'	3.5
16 WF 40	2'-6"	10.0'	3.6
16 WF 45	2'-6"	10.5'	3.8
18 WF 50	2'-6"	11.5'	4.2

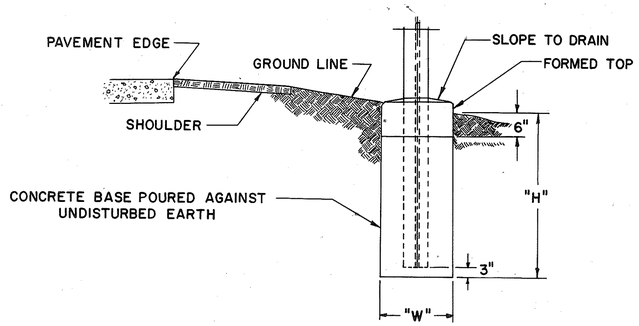

FOUNDATION DETAILS FOR EMBEDDED POSTS AND BEAMS

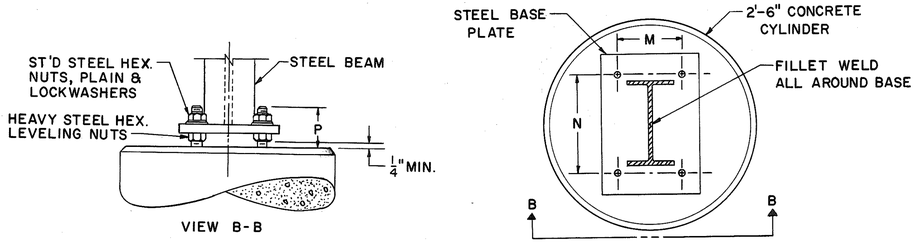

ALTERNATE ANCHOR BASE DETAILS

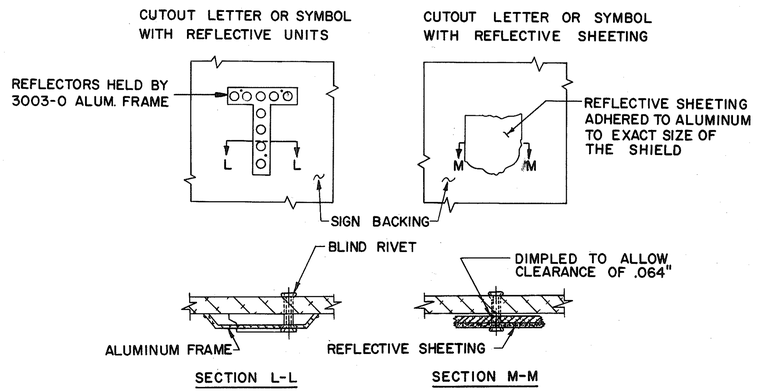

DEMOUNTABLE LETTERS & SYMBOLS

NOTES

PLAN QUANTITIES FOR POSTS AND STRUCTURAL SUPPORTS ARE BASED UPON THE "FOUNDATION DETAILS FOR EMBEDDED POSTS AND BEAMS".

IF THE CONTRACTOR ELECTS TO USE THE METHOD SHOWN FOR "ALTERNATE ANCHOR BASE DETAILS", THE PLAN QUANTITY OF EMBEDDED BEAM ONLY WILL BE ALLOWED IN EXCHANGE AND FULL PAYMENT FOR THE BASE PLATE, ANCHOR BOLTS AND REINFORCING STEEL.

WHERE ANCHOR BASES ARE USED, THE BEAM SIZE SHALL DETERMINE THE ANCHOR BOLT AND BASE PLATE SIZE.

DEMOUNTABLE UNITS SHALL BE ATTACHED TO THE ALUMINUM PANELS WITH ALUMINUM BLIND RIVETS. CARE SHALL BE TAKEN TO INSURE THAT ALL SEGMENTS OF EACH LETTER OR SYMBOL ARE SECURELY AFFIXED TO THE BACKING. LETTERS CONTAINING REFLECTIVE UNITS SHALL BE FASTENED IN ACCORDANCE WITH MANUFACTURERS SPECIFICATIONS.

DEMOUNTABLE SHEILDS SHALL BE AFFIXED TO THE BACKING UTILIZING 5/16" TRUSS HEAD BOLTS, PLAIN AND LOCKWASHERS FOR HOLE LOCATION DETAILS SEE SHEET NO. ____.

IN LIEU OF THE .040" THICK FRAME SPECIFIED IN SUPPLEMENTAL SPECIFICATION 815.08, THE FRAMES FOR THE REFLECTIVE UNITS IN THE SIGN OUTLINES ONLY, MAY BE .032" THICK ALUMINUM. (A.S.T.M. 8209GS11A-T6).

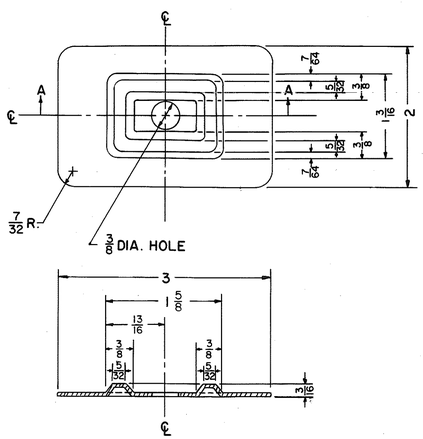

NOTE:
THE PLATE IS SYMMETRICAL ABOUT EITHER CENTERLINE.
METAL SHALL BE 16 GAUGE STEEL.
ALL DIMENSIONS ARE IN INCHES.

BEARING PLATE DETAIL

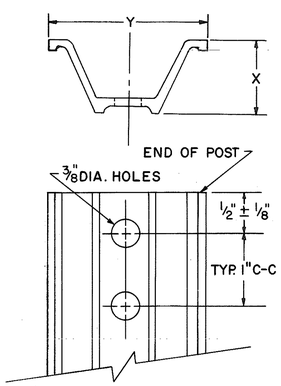

WEIGHT PER FOOT	X ± 3/32"	Y ± 1/8"
2.00 #	1 15/32"	3 1/16"
3.00 #	1 7/8"	3 1/2"
4.00 #	2"	3 5/8"

DRIVE POST DETAILS

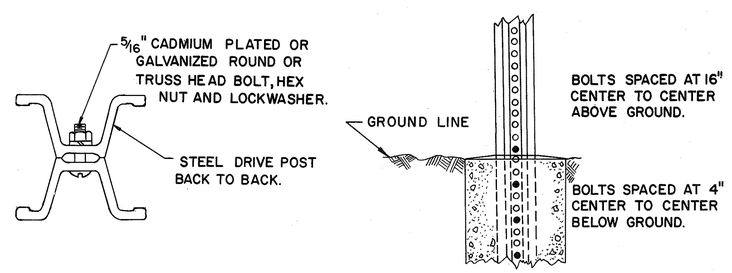

4#, 6# & 8# BEAM DETAILS

BUREAU OF TRAFFIC
OHIO DEPARTMENT OF HIGHWAYS

MISCELLANEOUS SIGNING ITEMS

MS I

DATE: 10-29-63, 8-19-64, 10-13-65

APPROVED Fred C. Tarbox
ENGINEER OF TRAFFIC

FED. RD. DIVISION	STATE	PROJECT	
2	OHIO	SU-1509(1)	

19/57

OBEBLIN ROAD VIADUCT
STARK COUNTY ROAD 374

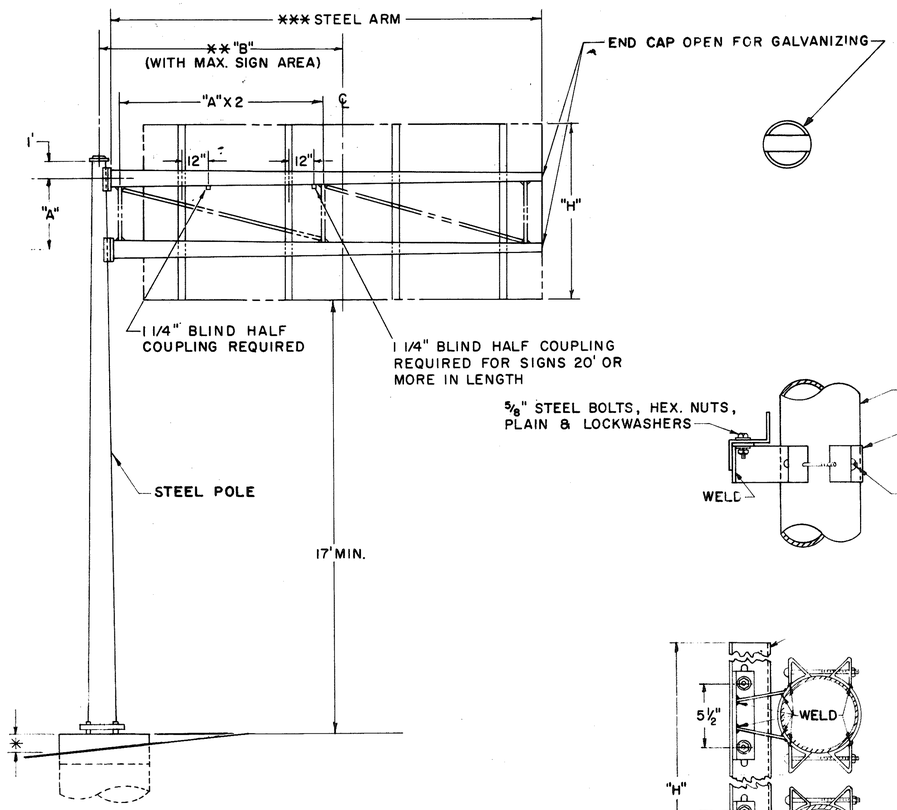

NOTE:
THE 12" DIMENSION SHOWN FOR BLIND HALF COUPLINGS MAY BE INCREASED OR DECREASED WHEN NECESSARY TO TO PREVENT INTERFERENCE WITH OTHER MEMBERS.

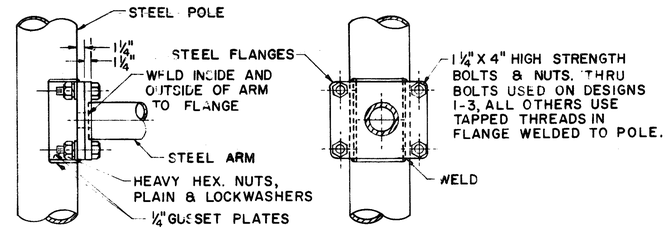

ARM ATTACHMENT

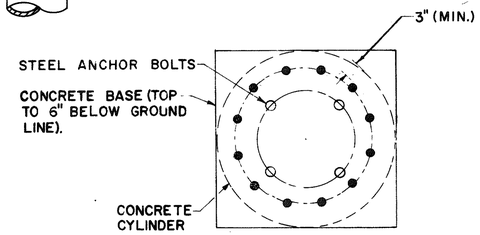

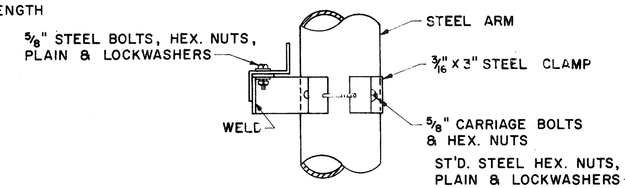

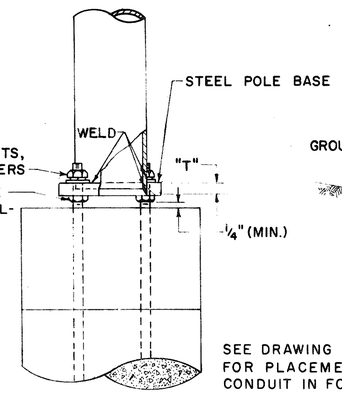

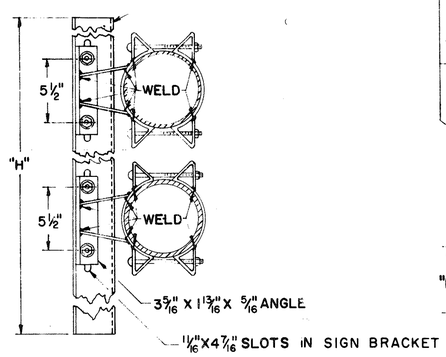

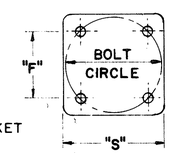

POLE BASE DETAIL

SIGN ATTACHMENT DETAIL

DESIGN NO.	POLE SIZE	*** ARM SIZE	DIM A	DIM ** B	DIM "D" MIN.	DIM E	DIM F	DIM P	DIM * S	DIM T	BOLT CIRCLE	ANCHOR BOLT SIZE	MAX SIGN AREA	REINF. BARS SIZE	REINF. BARS # REQ'D
1	3 Ga, 12" X 8.78" X 23'-0"	7Ga, 6.9" X 4.66" X 16'-0"	4'	12'	9'	3'-0"	11 5/16"	7 3/4"	17"	2"	16"	1 3/4" X 90"	80	3/4"	12
2	3 Ga, 12" X 8.78" X 23'-0"	7 Ga, 8" X 5.2" X 20'-0"	4'	16'	9'	3'-0"	11 5/16"	7 3/4"	17"	2"	16"	1 3/4" X 90"	80	3/4"	12
3	3 Ga, 15" X 11.5" X 25'-0"	7 Ga, 8.3" X 6.06" X 16'-0"	4'	12'	11'	3'-0"	15 1/2"	8 3/8"	23"	2"	22"	2" X 96"	120	1"	12
4	3 Ga, 16" X 12.5" X 25'-0"	3 Ga, 9.2" X 6.40" X 20'-0"	4'	16'	11'	3'-0"	16 5/16"	8 3/8"	24 1/2"	2"	23 1/2"	2" X 96"	120	1"	12
5	0 Ga, 18" X 14.36" X 26'-0"	7 Ga, 11" X 7.92" X 22'-0"	6'	14'	13'	3'-0"	18"	9 3/8"	26 1/2"	2 1/2"	25 1/2"	2 1/4" X 120"	180	1 1/8"	12
6	0 Ga, 18" X 14.36" X 26'-0"	7 Ga, 12.5" X 8.86" X 26'-0"	6'	18'	13'	3'-0"	18"	9 3/8"	26 1/2"	2 1/2"	25 1/2"	2 1/4" X 120"	180	1 1/8"	12
7	2 PLY 7 Ga, 18" X 14.36" X 26'-0"	7 Ga, 12.5" X 9.14" X 24'-0"	6'	14'	15'	3'-0"	18"	9 3/4"	26 1/2"	2 1/2"	25 1/2"	2 1/2" X 144"	240	1 1/4"	12
8	2 PLY 1/4", 18" X 14.36" X 26'-0"	3 Ga, 12.5" X 8.58" X 28'-0"	6'	18'	15'	3'-0"	18"	11 1/4"	26 1/2"	3"	25 1/2"	3" X 144"	240	1 1/4"	12

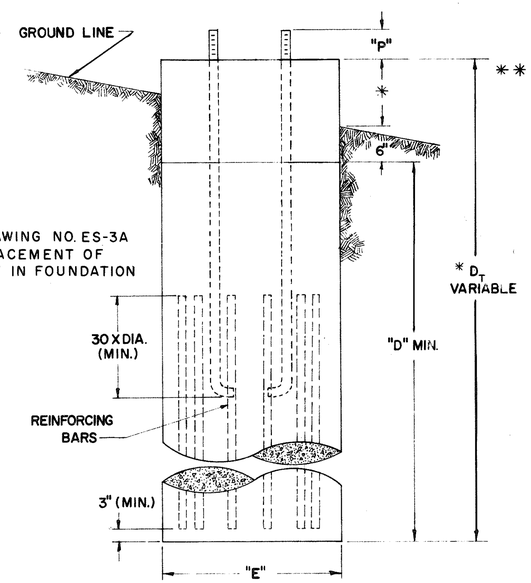

FOUNDATION DETAIL

NOTES

FABRICATION - ALL PORTIONS OF THE SIGN SUPPORT, INCLUDING SIGN ATTACHMENTS, SHALL BE HOT DIP GALVANIZED IN ACCORDANCE WITH THE REQUIREMENTS OF A.S.T.M. DESIGNATIONS A-123 AND A-153. THE CONDUIT SHALL BE GALVANIZED IN ACCORDANCE WITH SEC. 625.13 AND SHALL BE INCLUDED IN THE UNIT PRICE BID FOR OVERHEAD SIGN SUPPORTS FOR PAYMENT.

* FOUNDATION - THE TOP ELEVATION OF FOUNDATIONS SHALL BE VARIED SO AS TO MAINTAIN A MINIMUM CLEARANCE OF 17' BETWEEN THE BOTTOM OF THE SIGN AND THE HIGHWAY CROWN.

** ERECTION - VALUES OF "B" MAY BE EXCEEDED PROVIDED THE PRODUCT OF ACTUAL SIGN AREA TIMES THE DISTANCE FROM ℄ OF POLE TO ℄ OF SIGN DOES NOT EXCEED THE MAX. SIGN AREA TIMES "B".

*** ARMS 20' LONG OR LONGER ARE TO BE TRUSS TYPE WITH 3" X 3" X 3/8" ANGLES WELDED TO GUSSET PLATES.

MATERIAL - STEEL POLE BASES, FLANGES, AND END CAPS SHALL CONFORM TO THE REQUIREMENTS OF ASTM SPECIFICATION A 30 GRADE B.
HIGH STRENGTH STEEL BOLTS SHALL CONFORM TO ASTM SPECIFICATION A 193 GRADE B7 AFTER FABRICATION TAPERED POLES AND ARMS SHALL HAVE A MINIMUM YIELD STRENGTH OF 48,000 PSI.

SOILS - THE FOUNDATION DETAILS SHOWN ARE FOR AVERAGE SOIL CONDITIONS (MEDIUM CLAY, CEMENTED SAND AND GRAVEL, SANDY CLAY, OR STIFF CLAY).
FOR POOR SOIL CONDITIONS, INCREASE "D" MIN. BY: 50% IN DRY OR WET SAND, 60% IN SILTY CLAY, 100% IN SOFT CLAY, AND FROM 75% TO 150% IN WET SILT, DEPENDING ON QUICKSAND ACTION.

REINFORCING STEEL - REINFORCING STEEL AS SHOWN IN TABLE SHALL BE INSTALLED WHEN "D_T" EXCEEDS THE ANCHOR BOLT LENGTH BY MORE THAN 3 FT. THE COST AND PLACEMENT OF REINFORCING STEEL SHALL BE INCLUDED IN THE UNIT PRICE FOR ITEM 816 CONCRETE FOR SIGN SUPPORT FOUNDATIONS.

DESIGN

THE DESIGN OF OVERHEAD SUPPORTS IS IN ACCORDANCE WITH A.A.S.H.O. SPECIFICATIONS FOR THE DESIGN AND CONSTRUCTION OF STRUCTURAL SUPPORTS FOR HIGHWAY SIGNS, ADOPTED JUNE 12, 1961.

BUREAU OF TRAFFIC
OHIO DEPARTMENT OF HIGHWAYS

OVERHEAD SIGN SUPPORT	816 No. 12.24	DATE 8-18-61 4-11-62 4-18-67

APPROVED Robert E. Conner
ENGINEER OF TRAFFIC

FED. RD. DIVISION	STATE	PROJECT	
2	OHIO	SU-1509(1)	

20/57

OBERLIN ROAD VIADUCT
STARK CO. RD. 374

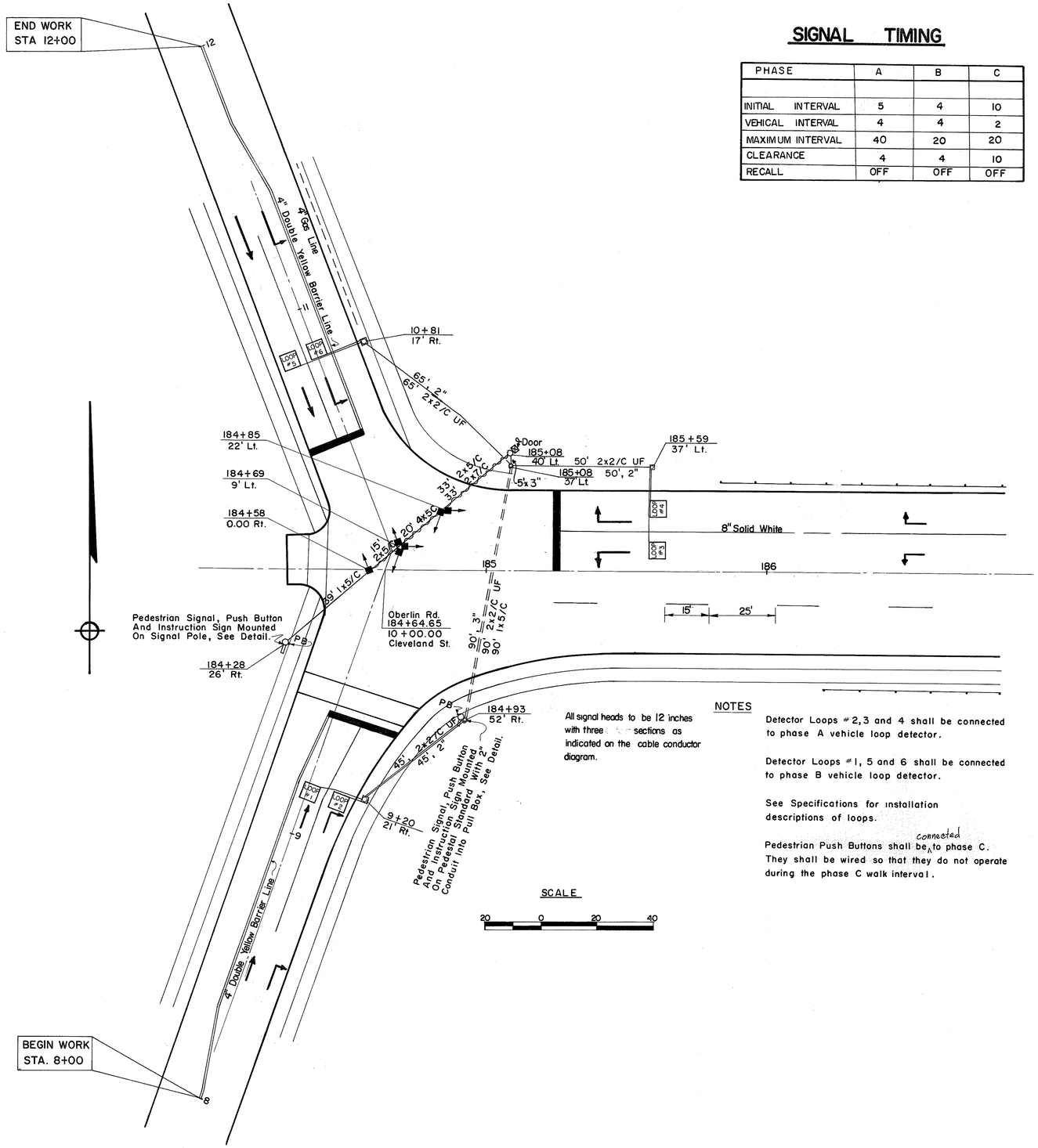

SIGNAL TIMING

PHASE	A	B	C
INITIAL INTERVAL	5	4	10
VEHICAL INTERVAL	4	4	2
MAXIMUM INTERVAL	40	20	20
CLEARANCE	4	4	10
RECALL	OFF	OFF	OFF

SIGNAL SEQUENCE

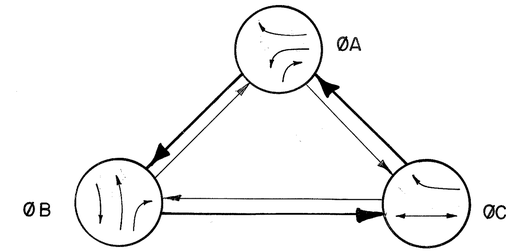

NOTES:
Heavy Solid Line Indicates Preferential Sequence Subject to Detected Demand.

SIGNAL DISPLAY SCHEDULE

INTERVAL	Ø A		Ø B		Ø C		FLASH
	R/W	C	R/W	C	R/W	C	
SIGNAL							
1	R	R	↖	Y	R	R	FY
2	→	→①	→	Y③	R	R	FY
3	←	Y	R	R	R	R	FR
4	→	Y②	R	R	→	→④	FR
5	R	R	G	Y	R	R	FY
6	DW	DW	DW	DW	W	DW	OFF

① Becomes Y. if ØB is Skipped.
② Becomes → if ØB is Skipped.
③ Becomes → if ØC is Skipped.
④ Becomes Y if ØA is Skipped.

NOTES

All signal heads to be 12 inches with three [illegible] sections as indicated on the cable conductor diagram.

Detector Loops #2, 3 and 4 shall be connected to phase A vehicle loop detector.

Detector Loops #1, 5 and 6 shall be connected to phase B vehicle loop detector.

See Specifications for installation descriptions of loops.

Pedestrian Push Buttons shall be connected to phase C. They shall be wired so that they do not operate during the phase C walk interval.

SCALE
20 0 20 40

CABLE-CONDUCTOR DIAGRAM

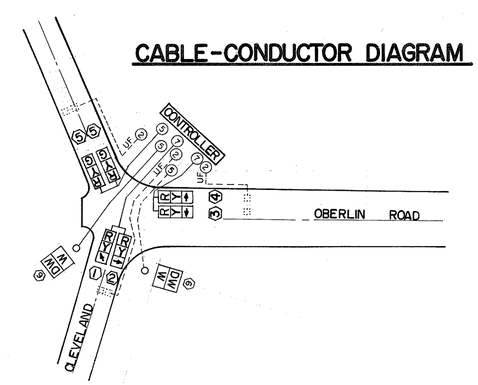

SIGNAL LAYOUT

SUMMARY
TRAFFIC SIGNAL QUANTITIES

ITEM	TYPE CODE 6201 DESCRIPTION	UNIT	QUANTITY
625	Three Phase Fully-Actuated Controller, Cabinet and Related Equipment	Each	1
625	Vehicle Loop Detector	Each	2
625	Detector Loops in Pavement (14 THW,UF, or TW Wire)	Each	6
625	Pedestrian Push Button	Each	2
625	Pedestrian Instruction Sign	Each	2
625	Traffic Signal Head , 12" Lenses Complete With Fittings For Span Wire Mounting		
	3 Section 3 Way	Each	1
	3 Section 2 Way	Each	1
	3 Section 1 Way	Each	1
625	Pedestrian Signal , 12" Lenses Complete With Fittings		
	For Pole Mounting	Each	1
	For Pedestal Mounting	Each	1
625	Circular Bituminous Fiber Pull Box 18 in. Dia.	Each	5
625	Rigid Ferrous Metal Electrical Conduit Type II in Trench (24" Deep)		
	2" Dia. Conduit	Lin. ft.	160 ft.
	3" Dia. Conduit	Lin. ft.	90 ft.
816	Galvanized Steel Strain type, Traffic Signal Pole For Anchor Base Mounting		
	12" Dia. 30 ft. 3 Guage	Each	2
816	Galvanized Steel Pedestal Type Traffic Signal Pole For Anchor Base Mounting		
	4" Dia. 8 ft.	Each	1
816	Traffic Signal Pole Foundation	Cu. Yds.	13
625	Aluminum Clad Steel Messenger Wire With Accessories	Lin.ft.	106
625	Traffic Signal Cable		
	7 Conductor No. 14 AWG , 600 Volt, RHW, Solid	Lin. ft.	124
	5 Conductor No. 14 AWG , 600 Volt, RHW, Solid	Lin. ft.	414
	2 Conductor No. 14 AWG, 600 Volt, Type UF	Lin. ft.	600
625	Power Cable 2 Conductor No. 8 AWG, 600 Volt, Stranded	Lin. ft.	60
625	Power Cable Duplex #6 Aluminum 7 STD. Neutral Messenger With Insulated	Lin. ft.	200
	Service Wire		

LEGEND

- SIGNAL HEAD
- INSULATOR
- JUNCTION RING
- STEEL SIGNAL POLE
- CONTROLLER
- PULL BOX (18" DIAMETER)
- 12' – 3" / 2 X 5/C — CONDUIT IN TRENCH (LENGTH & DIAMETER WITH NUMBER OF CABLES AND CONDUCTORS)
- CONDUIT UNDER PAVEMENT
- STOPLINE
- LOOP DETECTOR
- AERIAL CABLE - SIZE AS NOTED
- P.B. PEDESTRIAN PUSH BUTTON WITH INSTRUCTION SIGN ON POLE
  PEDESTRIAN SIGNAL

PAVEMENT MARKING

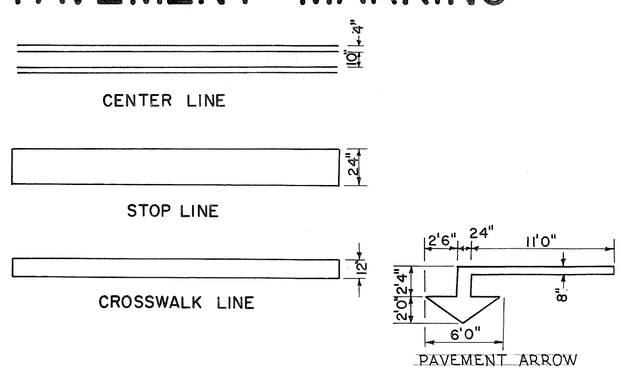

FED. RD. DIVISION	STATE	PROJECT	
2	OHIO	SU-1509 (I)	

22/57

OBERLIN ROAD VIADUCT
STARK COUNTY ROAD 374

SIGNAL DETAILS

SCALE: 1/4" = 1'

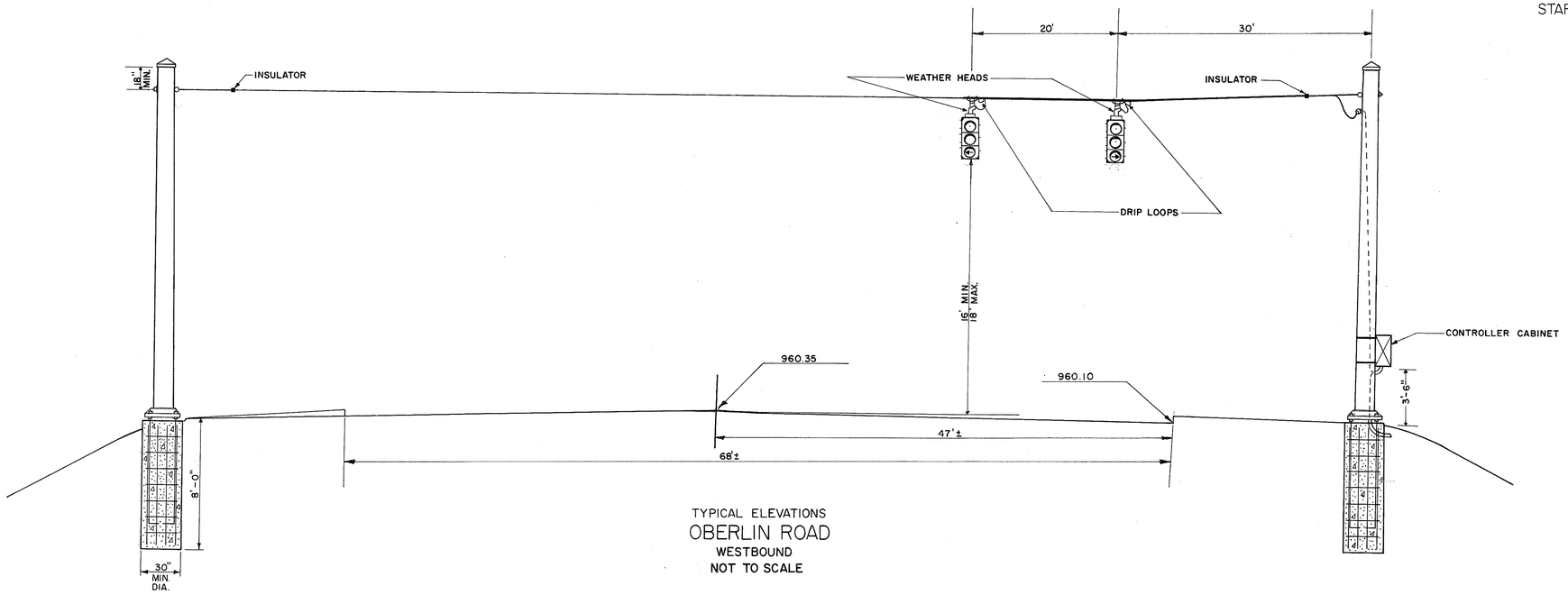

TYPICAL ELEVATIONS
OBERLIN ROAD
WESTBOUND
NOT TO SCALE

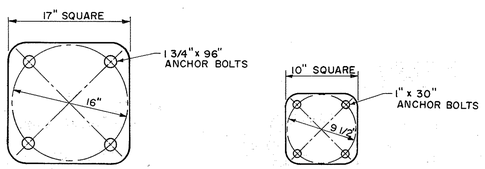

FOR TRAFFIC SIGNAL POLES

FOR PEDESTAL

ANCHOR BOLT PLANS

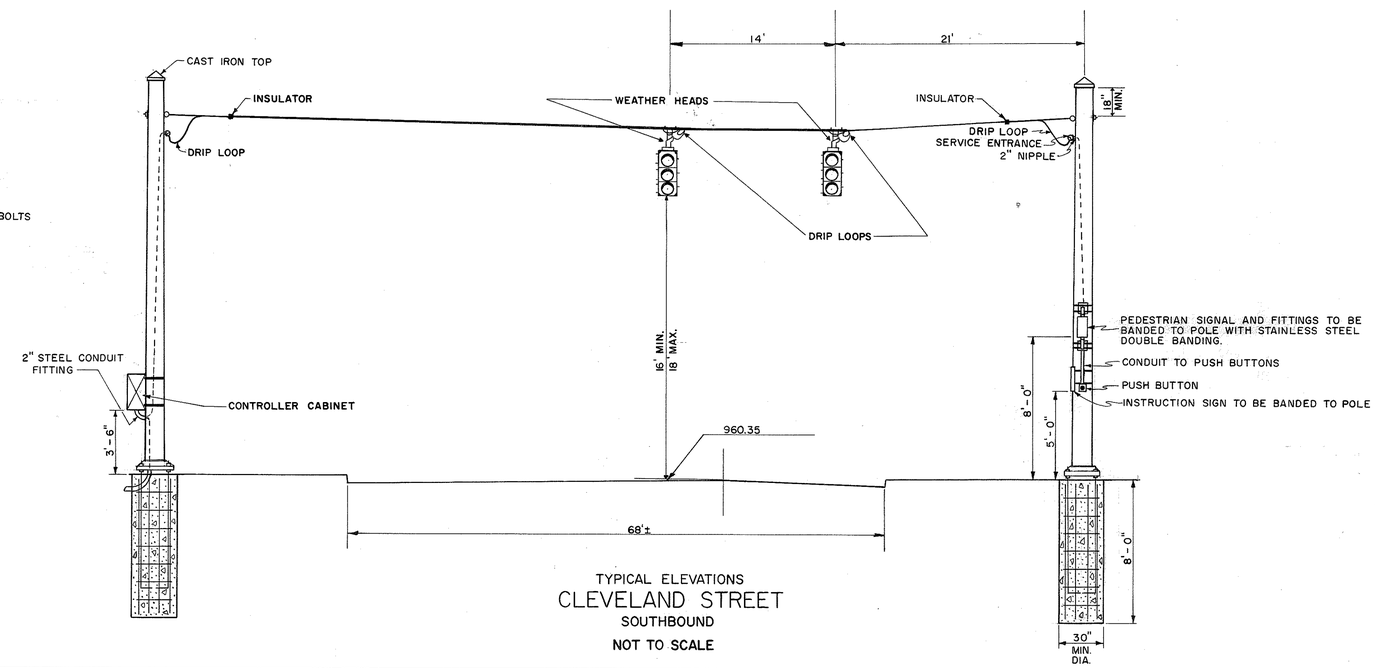

TYPICAL ELEVATIONS
CLEVELAND STREET
SOUTHBOUND
NOT TO SCALE

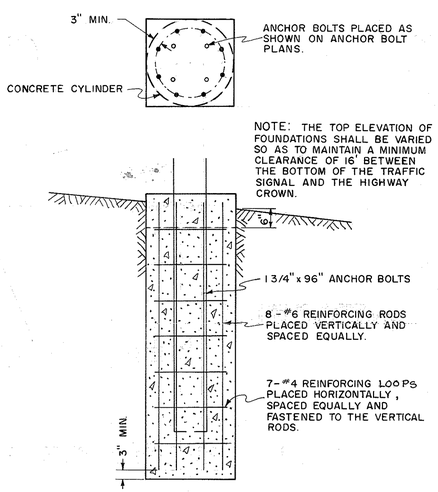

POLE FOUNDATION DETAIL

SIGNAL DETAILS

FED. RD. DIVISION	STATE	PROJECT	
2	OHIO	SU-1509(1)	

23
57

OBERLIN ROAD VIADUCT
STARK COUNTY ROAD 374

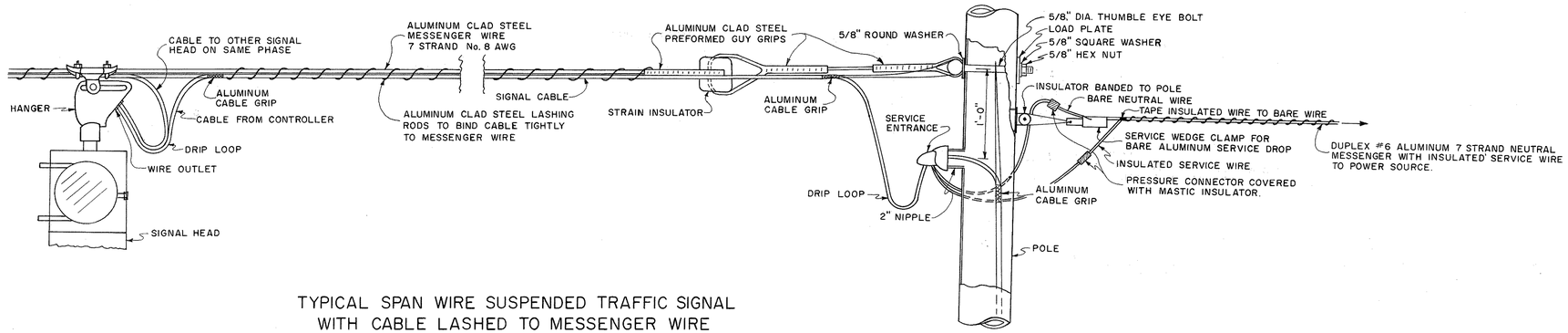

TYPICAL SPAN WIRE SUSPENDED TRAFFIC SIGNAL
WITH CABLE LASHED TO MESSENGER WIRE

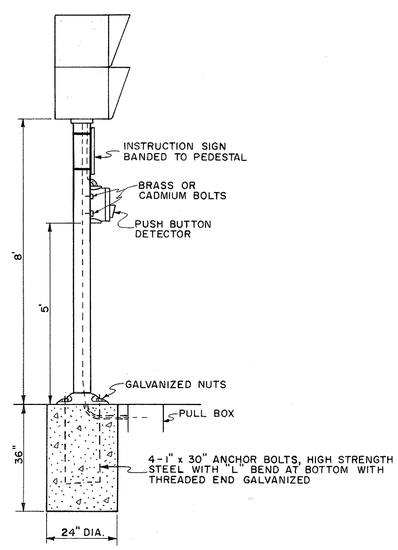

PEDESTRIAN SIGNAL MOUNTED ON PEDESTAL

SIDE VIEW

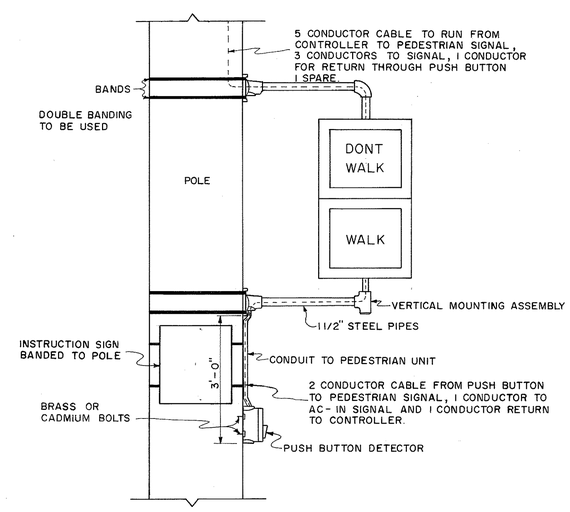

TYPICAL PEDESTRIAN SIGNAL INSTALLATION

FED. RD. DIVISION	STATE	PROJECT	
2	OHIO	SU-1509 (1)	

OBERLIN ROAD VIADUCT
STARK COUNTY ROAD 374

POLE & BRACKET DATA

(A) 1 EA. - U.M. 440A-3H-246-C2 W/MOD 14 HGT 24'-6" BRACKET LENGTH - 8 FT.
(B) 1 EA. - U.M. 440A-3H-246-D2 W/MOD 14 HGT 24'-6" BRACKET LENGTH - 10 FT.
(C) 3 EA. - U.M. 440A-H-246-C2 W/MOD 14 HGT 24'-6" BRACKET LENGTH - 8 FT.
(D) 3 EA. - U.M. 440A-H-246-D2 W/MOD 14 HGT 24'-6" BRACKET LENGTH - 10 FT.
(E) 2 EA - U.M. 440A-H-270-C2 W/MOD 14 HGT 27'-0" BRACKET LENGTH - 8 FT.
(F) 2 EA - U.M. 440A-H-270-E2 W/MOD 14 HGT 27'-0" BRACKET LENGTH - 12 FT.

(A)(B)(C)(D)(E)(F) 22500 LUMEN, MERCURY VAPOR, STEEL POLE

BY OTHERS - NOT INCLUDED IN THIS CONTRACT

BASE DETAIL

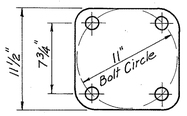

Poles: (A) (B) (C) (D) (E) (F)

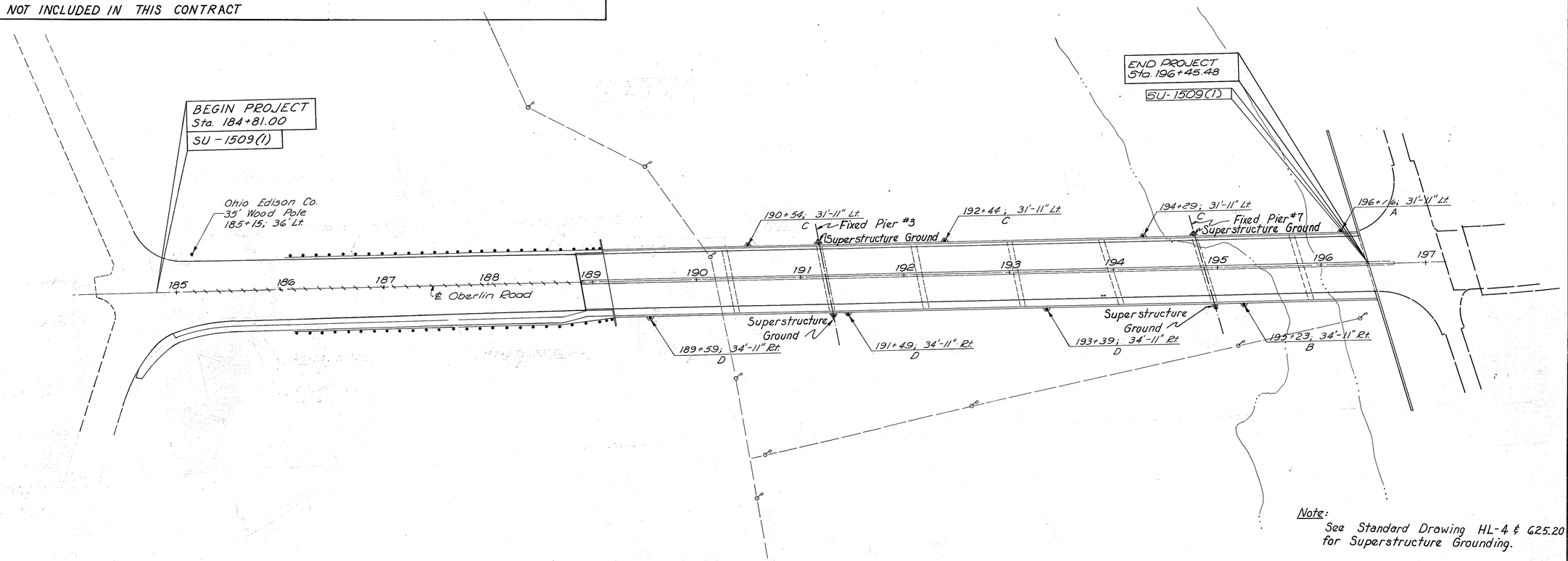

Note:
See Standard Drawing HL-4 & G25.20 for Superstructure Grounding.

LIGHTING PLAN

FED. RD. DIVISION	STATE	PROJECT	
2	OHIO	SU 1509 (1)	

25/57

STARK COUNTY ROAD 374

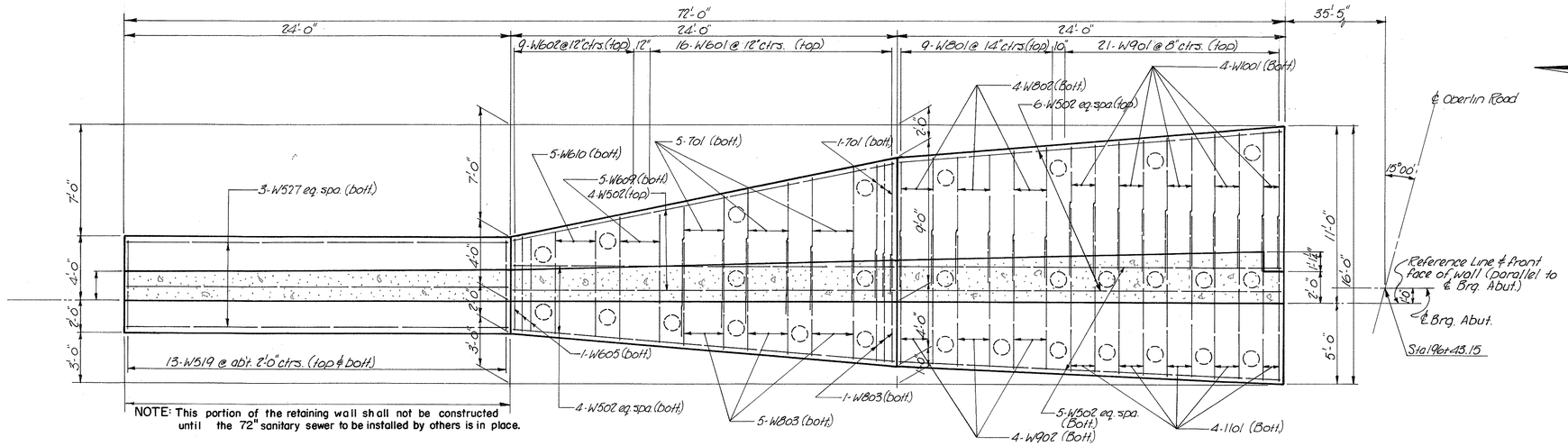

FOOTING PLAN

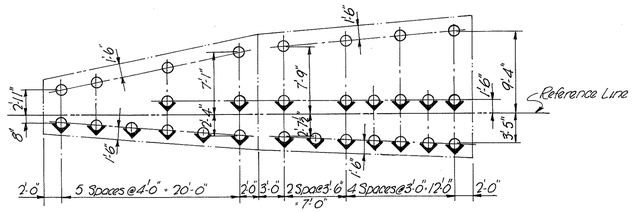

PILING LAYOUT

(All piles 12" ϕ C.I.P. reinforced concrete)

Note: ◇ Indicates piles battered 3" in 12" in direction indicated.

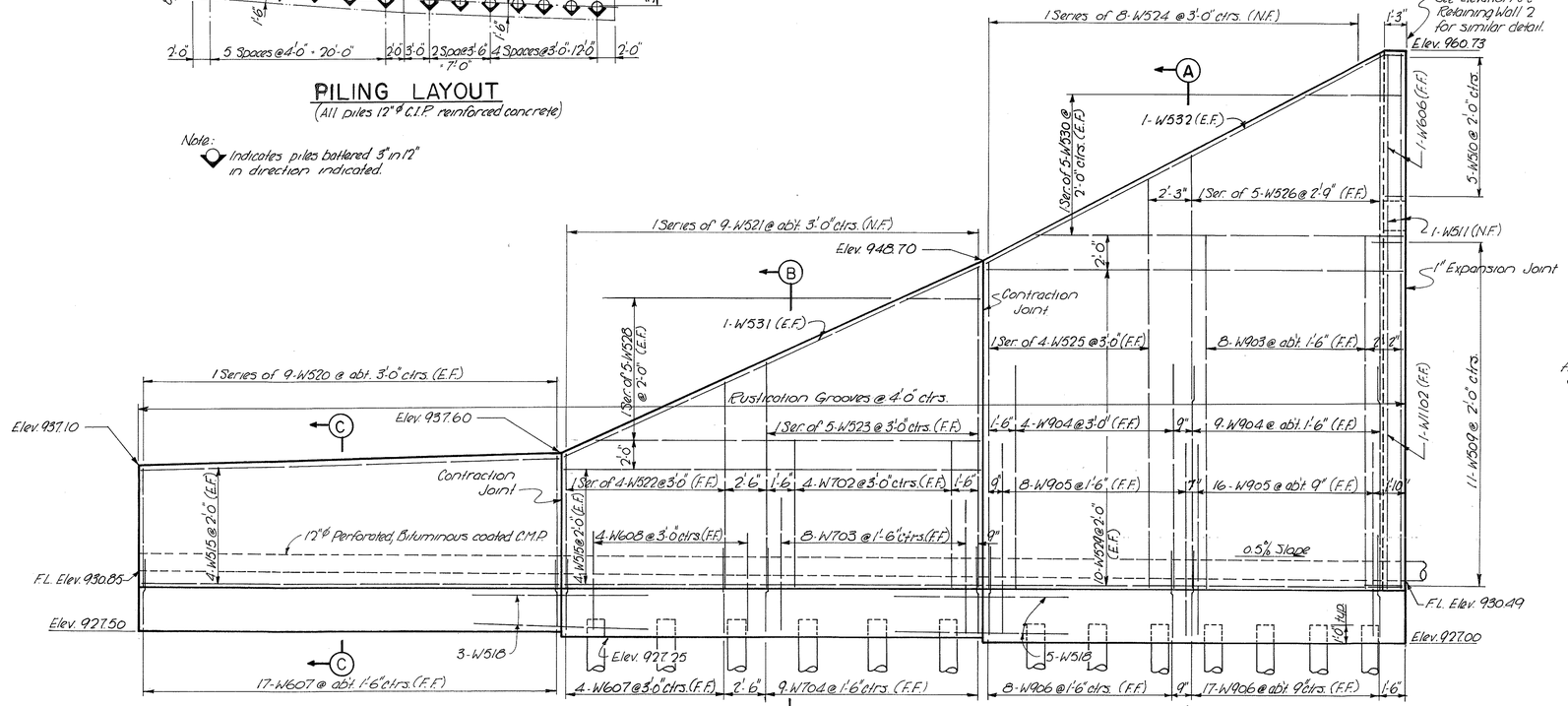

ELEVATION

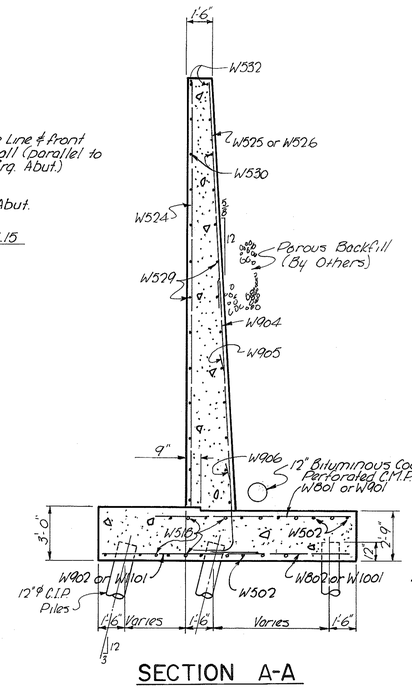

SECTION A-A

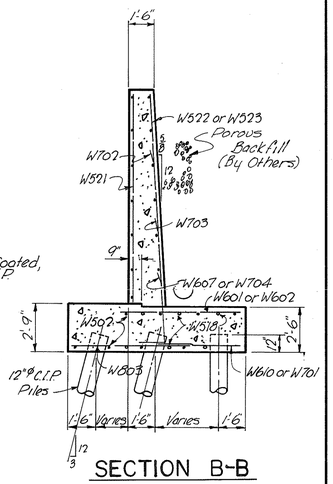

SECTION B-B

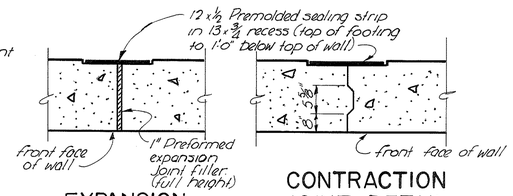

EXPANSION JOINT DETAIL

full height of stem

CONTRACTION JOINT DETAIL

full height of stem

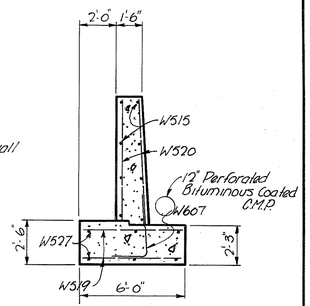

SECTION C-C

Notes:
For Reinforcing Steel List, General Notes and Quantities see **wall sheet**.
N.F. means near face.
F.F. means far face.
E.F. means each face.
For Rustication Groove Detail, see **wall sheet**.

STARK COUNTY, OHIO — *Wall Sheet 1*

OBERLIN ROAD VIADUCT (Relocated)

RETAINING WALL NO. 1

STA. 189+14.87 to STA. 196+45.48

DESIGNED	DRAWN BY	TRACED BY	CHECKED BY	REVIEWED	REVISED
NEN	A.J.M.		AB		

E. S. PRESTON & ASSOCIATES, LTD.

FED. RD. DIVISION	STATE	PROJECT	
2	OHIO	SU 1509 (1)	

26/57

STARK COUNTY ROAD 374

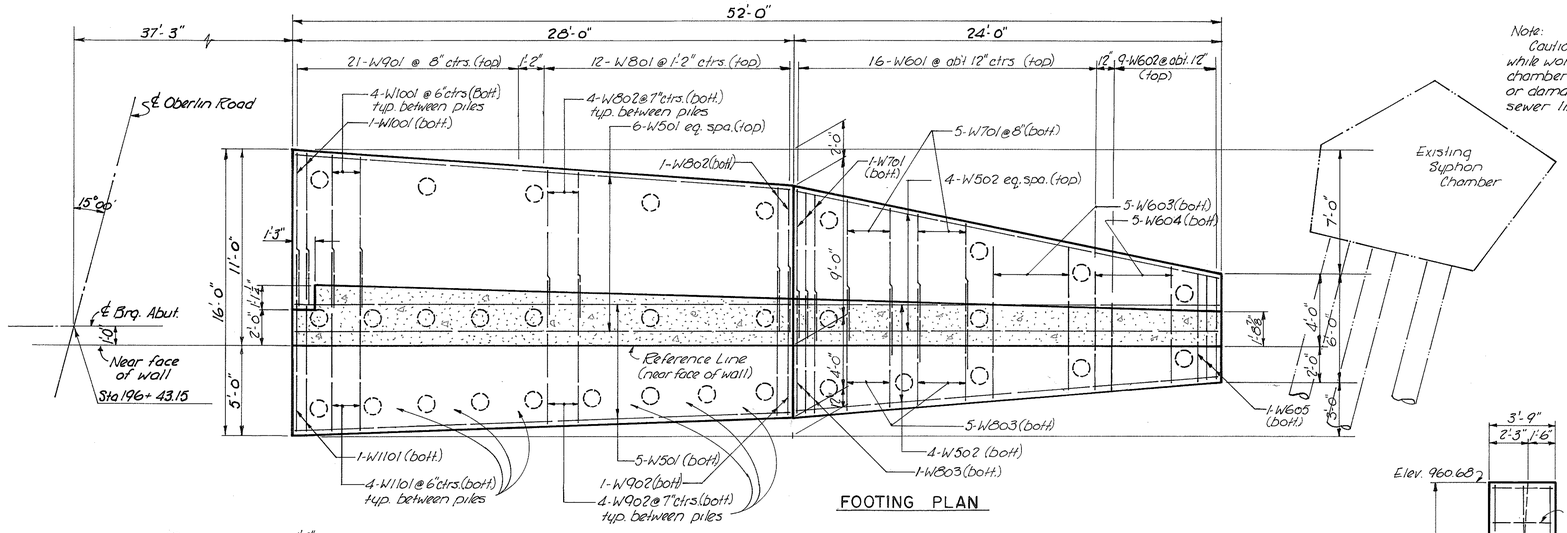

FOOTING PLAN

Note:
Caution should be exercised while working near syphon chamber so as not to disturb or damage chamber and/or sewer lines.

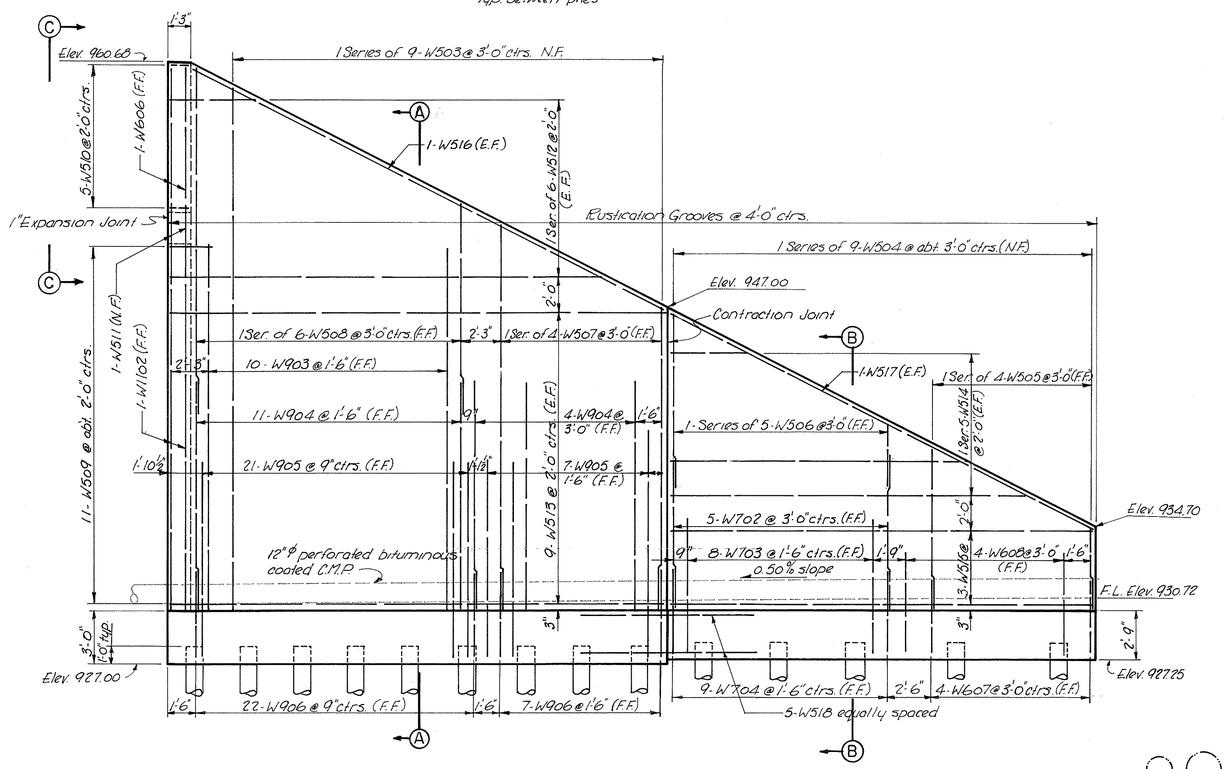

ELEVATION

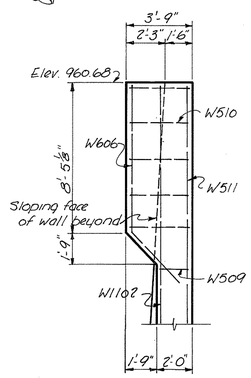

ELEVATION C-C

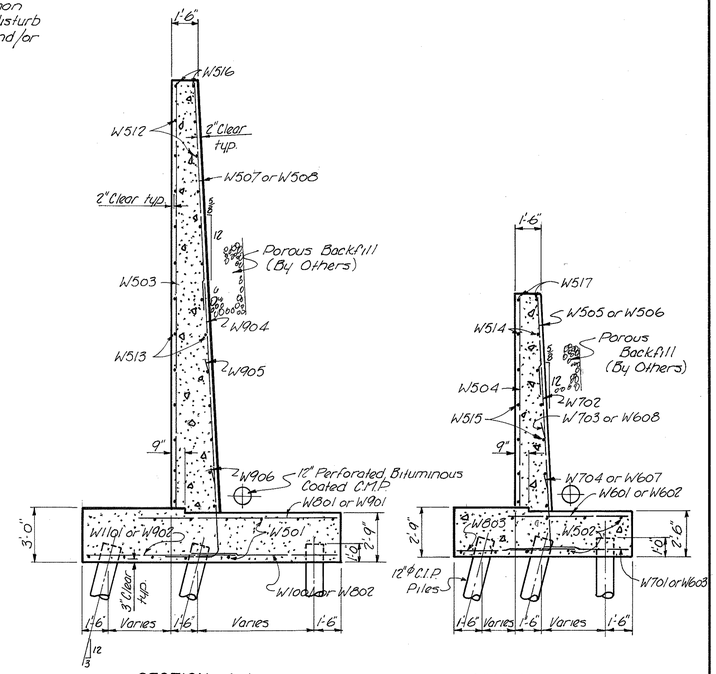

SECTION A-A

SECTION B-B

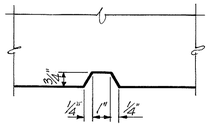

RUSTICATION GROOVE DETAIL

Notes:
For Expansion and Contraction Joint Details see **wall sheet 1**
For Reinforcing Steel Schedule, General Notes and Quantities see **wall sheet 3**
N.F. means near face.
F.F. means far face.
E.F. means each face.
Eq. Spa. means equally spaced.

Note:
⊕ : indicates piles battered 3" in 12" in direction shown.

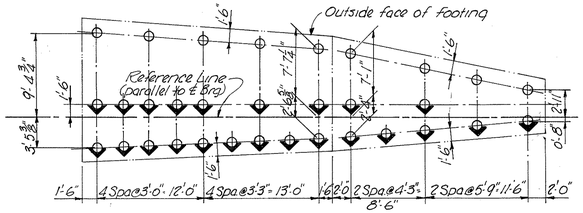

PILING LAYOUT

(All piles 12"φ Cast-in place Reinforced Concrete)

Existing 15", 18" & 21" sewers

STARK COUNTY, OHIO — wall sheet 2

OBERLIN ROAD VIADUCT (Relocated)

RETAINING WALL NO. 2

STA. 189+14.87 to STA. 196+45.48

DESIGNED	DRAWN BY	TRACED BY	CHECKED BY	REVIEWED	REVISED
NEN	A.J.M.		AB		

E. S. PRESTON & ASSOCIATES, LTD.

FED RD DIVISION	STATE	PROJECT	
2	OHIO	SU 1509 (1)	

STARK COUNTY ROAD 374

REINFORCING STEEL LIST

MARK	NO. REQUIRED No.1	No.2	Total	LENGTH	TYPE	DIMENSION a	b	c	d	Ser. Incre.	WT.
W501		11	11	27'-9"	Str.						320
W502	19	8	27	23'-9"	Str.						668
W503		1 Ser. 9	1 Ser. 9	16'-10 to 29'-3	Str.					1' - 6 3/4	161
W504		1 Ser. 9	1 Ser. 9	4'-6 to 16'-8	Str.					1' - 6 1/4	108
W505		1 Ser. 4	1 Ser. 4	4'-6 to 9'-3	Str.					1'-7"	29
W506		1 Ser. 5	1 Ser. 5	3'-6 to 9'-6	Str.					1'-6"	34
W507		1 Ser. 4	1 Ser. 4	17'0 to 21'-8	Str.					1'-6 3/4	82
W508		1 Ser. 6	1 Ser. 6	11'-7 to 19'-5	Str.					1'-6 3/4	98
W509	11	11	22	7'-1	4	1'-8	2'-10	2'-10			163
W510	5	5	10	7'-6	4	0'-11	3'- 5	3'- 5			80
W511	2	2	4	30'-6	Str.						128
W512		2 Ser. 6	2 Ser. 6	4'-2 to 23'-9	Str.					3'-11	175
W513		18	18	26' - 6	Str.						497
W514		2 Ser. 4	2 Ser. 4	4'-6 to 16'-3	Str.					3'-11	87
W515	16	8	24	23'-9	Str.						594
W516		2	2	29'-9	Str.						62
W517		2	2	26'-3	Str.						53
W518	16	6	22	10'-0	Str.						230
W519	26		26	5'-6	Str.						149
W520	2 Ser. 9		2 Ser. 9	6'-9 to 7'-5	Str.					0'-1	134
W521	2 Ser. 9		2 Ser. 9	7'-6 to 18'-6	Str.					1'-4 1/2	244
W522	1 Ser. 4		1 Ser. 4	7'-6 to 11'-6	Str.					1'-4	40
W523	1 Ser. 5		1 Ser. 5	12'-9 to 18'-3	Str.					1'-4 1/2	81
W524	1 Ser. 8		1 Ser. 8	18'-6 to 29'-7	Str.					1'-7	200
W525	1 Ser. 4		1 Ser. 4	18'-6 to 23'-3	Str.					1'-7	92
W526	1 Ser. 5		1 Ser. 5	13'-6 to 19'-0	Str.					1'-4 1/2	87
W527	3		3	23'-6	Str.						74
W528	2 Ser. 5		2 Ser. 5	4'-6 to 21'-9	Str.					4'-3 3/4	137
W529	20		20	22' - 5	Str.						469
W530	2 Ser. 5		2 Ser. 5	5'-6 to 20'-6	Str.					3'-9	136
W531	2		2	25'-9	Str.						54
W532	2		2	25'-6	Str.						53

REINFORCING STEEL LIST (Cont.)

MARK	NO. REQUIRED No.1	No.2	Total	LENGTH	TYPE	DIMENSION a	b	c	d	Ser. Inc.	WT.
W601	16	16	32	6' - 6	Str.						312
W602	9	9	18	5' - 6	Str.						150
W603		5	5	8' - 9	1	8'-0					66
W604		5	5	6' - 9	1	6'-0					51
W605	3	3	6	6' - 3	1	5'-6					57
W606	2	2	4	11' - 6	5	3'-9	7'-9	2'-5	2'-5		70
W607	21	4	25	6' - 2	2	1'-11	4'-5	0'-3			233
W608	4	4	8	7'-6	2	1'-11	5'-9	0'-4			90
W609	5		5	8' - 4	1	7'-6					63
W610	5		5	7' - 1	1	6'-3					54
W701	18	13	31	8' - 3	Str.						524
W702	4	5	9	8' - 6	Str.						158
W703	8	8	16	9' -7	2	2'-3	7'-6	0'-6			316
W704	9	9	18	6' - 10	2	2'-3	4'-9	0'-3			251
W801	9	12	21	10' - 0	Str.						560
W802	12	18	30	8' - 0	Str.						640
W803	18	13	31	7' - 7	1	6'-6					677
W901	21	21	42	11' - 0	Str.						1,570
W902	12	18	30	9' - 3	1	8'-0					937
W903	8	10	18	20' - 3	Str.						1,241
W904	13	15	28	12' - 9	Str.						1,211
W905	24	28	52	13' - 5	2	2'-10	10'-0	0'-8			2,388
W906	25	29	54	8' - 3	2	2'-10	5'-8	0'-4			1,512
W1001	20	18	38	8' - 6	Str.						1,389
W1101	20	18	38	11' - 7	1	10' - 0					2,340
W1102	2	2	4	27' - 6	3	1'-6	26'-4				584

GENERAL NOTES

DESIGN SPECIFICATIONS: This structure conforms to the requirements of "Design Specifications for Highway Structures" of the State of Ohio, Department of Highways, dated 9-1-57, together with current revisions thereof.

CONCRETE shall be Class "E" for stem and footing.

DESIGN UNIT STRESSES:

Concrete, Class "E" - Basic Unit Stress = 1133 psi.

Reinforcing Steel - ASTM A15, A16, A160 Deformed, Intermediate or Hard Grade. Basin Unit Stress = 20,000 psi.

PILES shall be driven to a minimum bearing capacity of 40 tons per pile.

EXCAVATION QUANTITY includes the removal of fill material required for the construction of retaining walls.

FOUNDATION BEARING PRESSURE: Footings not on piles are designed for a maximum of 1.10 tons per square foot.

PROCEDURE: Fill material shall be placed and compacted to Elev. 930.0 after which excavation shall be made for the retaining walls and piles driven

TYPE 1

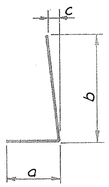

TYPE 2

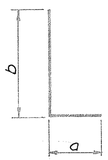

TYPE 3

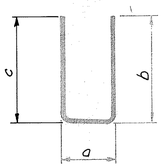

TYPE 4

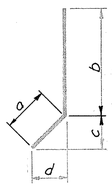

TYPE 5

BENDING DETAILS

REPLACEMENT BARS

MARK	NO.	LENGTH	TYPE
RE 500	1	5'-7"	Str.
RE 600	1	5'-11"	Str.
RE 700	1	6'-3"	Str.
RE 800	1	6'-6"	Str.
RE 900	1	6'-10"	Str.
RE 1000	1	7'-2"	Str.
RE 1100	1	7'-6"	Str.

TYPE CODE 6201
GENERAL SUMMARY
RETAINING WALLS

ESTIMATED QUANTITIES

ITEM	TOTAL	UNIT	DESCRIPTION	WALL 1	WALL 2
503	172	cu. yd.	Unclassified Excavation	91	81
507	2,745	lin. ft.	12" C.I.P. Reinforced Concrete Piles	1,305	1,440
509	22,963	lbs.	Reinforcing Steel	11,653	11,310
511	137	cu. yd.	Class "E" Concrete - Footings	72	65
511	189	cu. yd.	Class "E" Concrete - Stem	100	89
512	101	lin. ft.	Premolded Sealing Strip (12"x 1/2")	55	46
516	152	sq. ft.	1" Preformed Expansion Joint Filler (AASHO M-153)	76	76
518	124	lin. ft.	12 Perforated, C.M.P (including Specials) 707.04	72	52

STARK COUNTY, OHIO Wall Sheet 3

OBERLIN ROAD VIADUCT (Relocated)
RETAINING WALL (Nos. 1 & 2)
REINFORCING STEEL LISTS
STA. 189+14.87 to STA. 196+45.48

DESIGNED	DRAWN BY	TRACED BY	CHECKED BY	REVIEWED	REVISED
NEN	AJM	AJM	AB		

E. S. PRESTON & ASSOCIATES, LTD.

FED. RD. DIVISION	STATE	PROJECT	
2	OHIO	SU-1509(1)	

STARK COUNTY ROAD 374

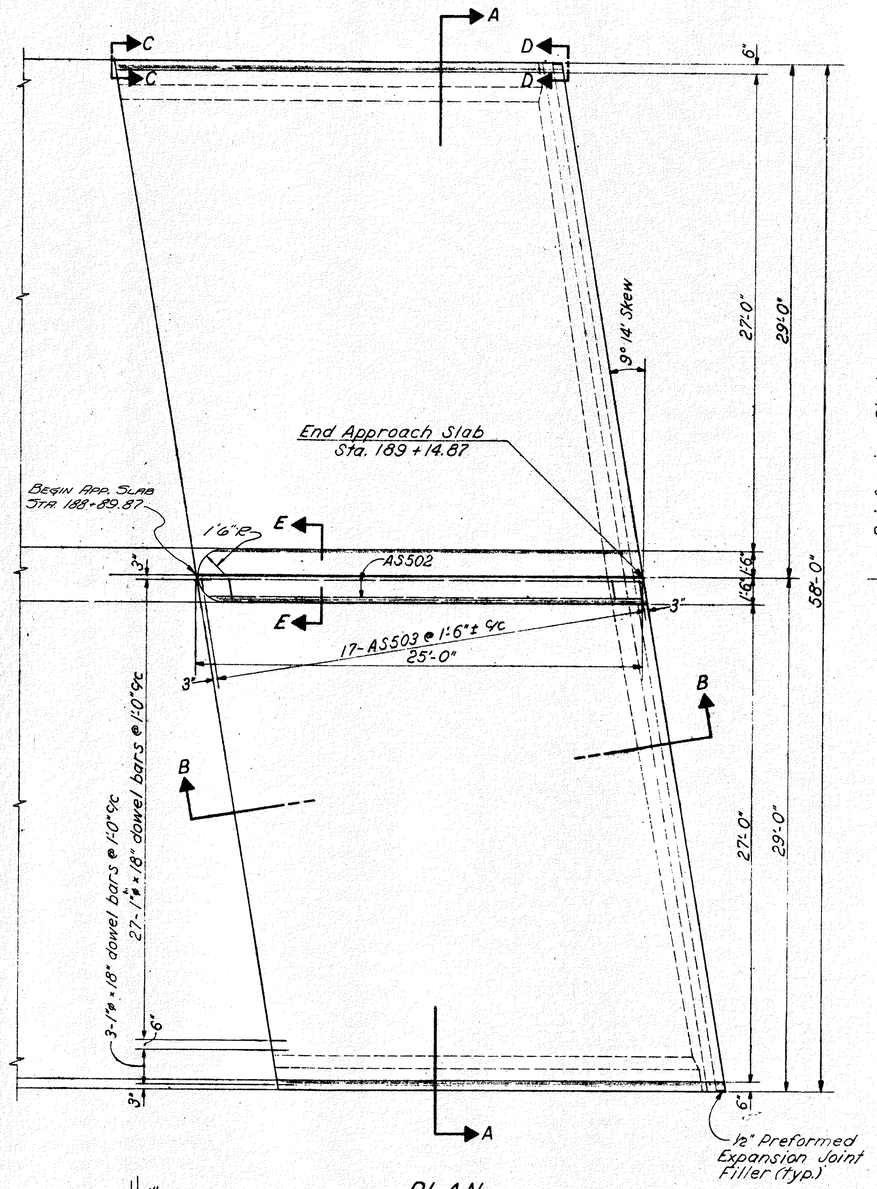

PLAN

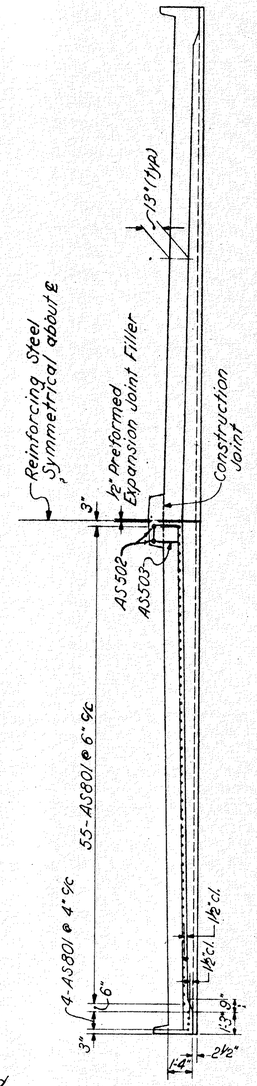

SECTION A-A

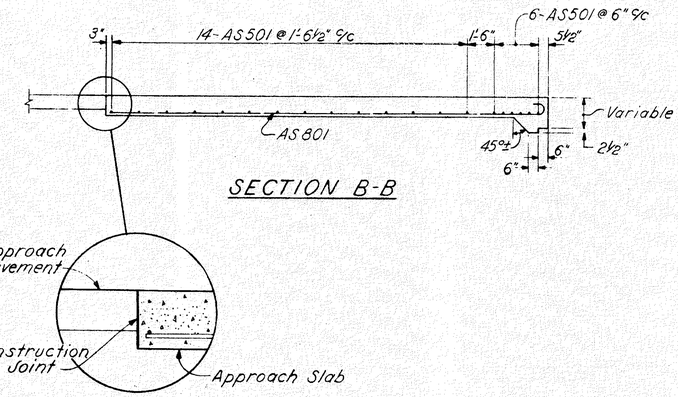

SECTION B-B

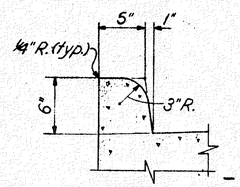

VIEW C-C

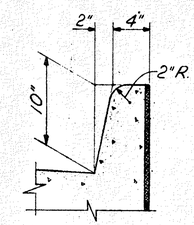

VIEW D-D

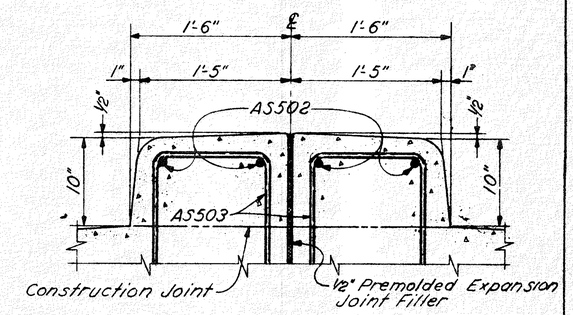

SECTION E-E

REINFORCING STEEL				
MARK	NO.	LENGTH	TYPE	WEIGHT
AS801	118	25'-7"	B	8,061
AS501	40	28'-10"	Str.	1,203
AS502	4	24'-6"	Str.	102
AS503	34	4'-0"	B	142
1" φ Bar	60	1'-6"	Str.	240

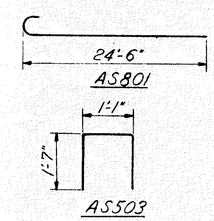

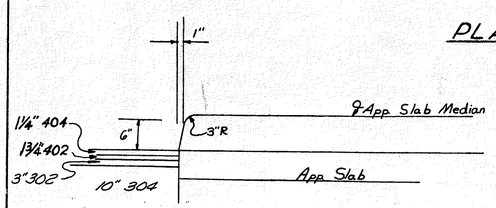

DETAIL - END CONCRETE MEDIAN

NO SCALE

For Details Not Shown
See Standard Construction Drawing AS-1-54

STARK COUNTY, OHIO

OBERLIN ROAD VIADUCT (Relocated)

REAR APPROACH SLAB

STA. 188+89.87 to STA. 189+14.87

DESIGNED	DRAWN BY	TRACED BY	CHECKED BY	REVIEWED	REVISED

E. S. PRESTON & ASSOCIATES, LTD.

FED. RD DIVISION	STATE	PROJECT	
2	OHIO	SU-1509(1)	

29 / 57

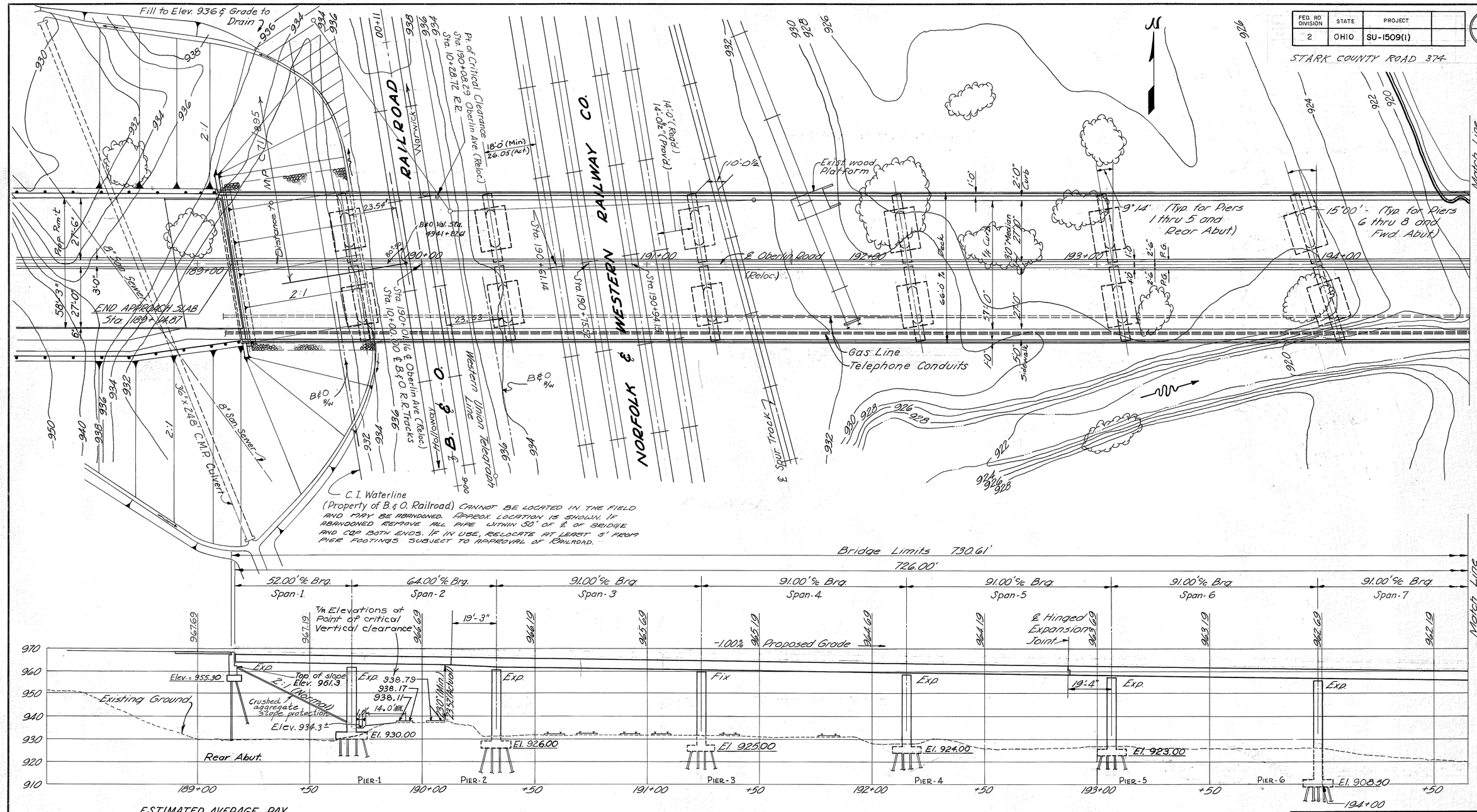

ESTIMATED AVERAGE PAY LENGTH OF 12"ϕ C.I.P. PILES:

1. Rear Abutment = 50'
2. Piers 1 thru 5 = 50'
3. Piers 6 thru 8 = 40'
4. Forward Abutment and Retaining Walls = 45'

FOUNDATION SOUNDINGS: Foundation design and foundation quantities are based on a study of soil-sampling soundings made at the site. This sounding information, the accuracy of which the State does not guarantee, may be examined in the office of the Bureau of Bridges in Columbus or in the Division Office at Ravenna.

B.M. = △ MARK ON TOP S.W. CORNER COPING ON WEST END BRIDGE UNDER B.&O. R.R. & OVER STREAM. 160 FT. SOUTH OF BRIDGE. ELEV. 935.60 (COUNTY B.M.)

B&O Bridge No., 43 B
Akron-Chicago Division
Wheeling-Lorain Branch

STARK COUNTY, OHIO
COUNTY COMMISSIONERS

1/24

SITE PLAN
OBERLIN VIADUCT (RELOC) OVER TUSCARAWAS RIVER and B.&O. R.R. and N.&W. RAILWAY

STARK COUNTY
PE.-17-33

STA. 189+17.15
TO STA. 196+45.48

DESIGNED	DRAWN	TRACED	CHECKED	REVIEWED
HV	A.S.B.		M.K.	

E.S. PRESTON & ASSOCIATES, LTD.
COLUMBUS, OHIO

FED. RD. DIVISION	STATE	PROJECT	
2	OHIO	SU-1509(11)	

30
57

STARK COUNTY ROAD 374

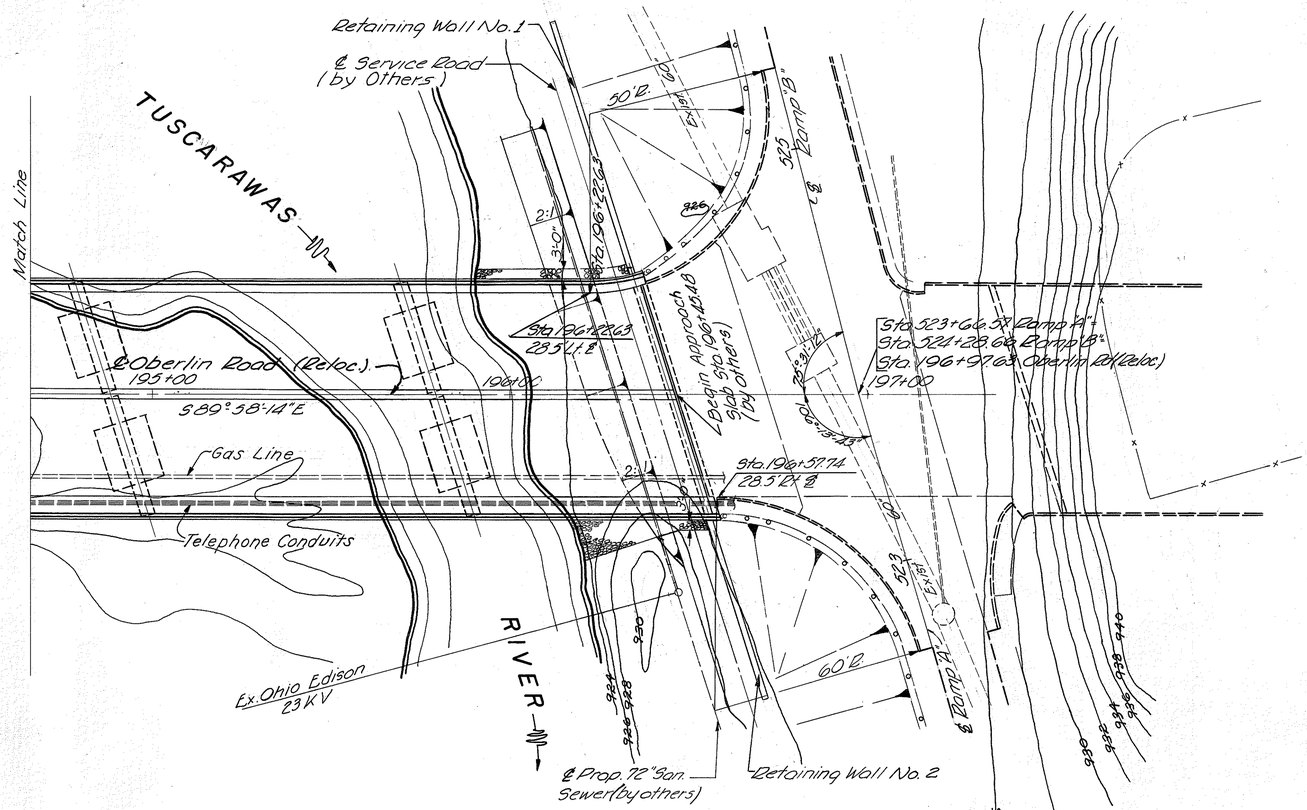

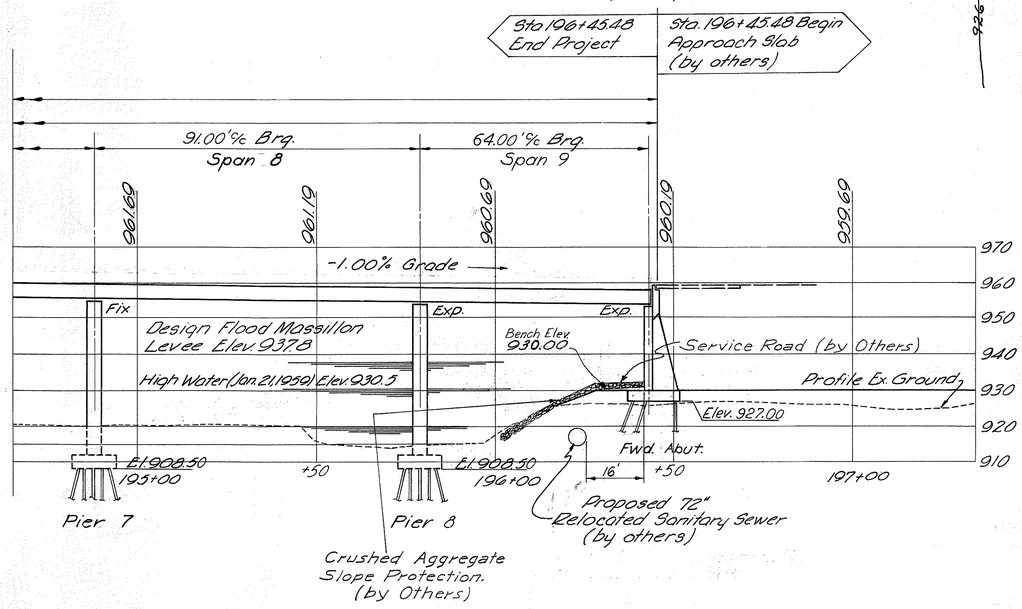

Opening Req'd. = 7,489 Sq. Ft.
Opening Provided = 7,637 Sq. Ft. (At Elev. 937.8)
Traffic: 14,220 = 1,980 ADT
Drainage Area: 526 Sq. Mi.

EXISTING BRIDGE DATA

TYPE: Varies, steel trusses in river spans, with R. R. concrete approach spans.
SPAN: Total length 989'. Twenty spans varying in length from 22' to 104'.
ROADWAY: 20' wide roadway with 5' wooden sidewalks on each side.
LOADING: Closed to vehicle traffic on March 8, 1965 - previously posted @ 12 tons gross wt.
SKEW: 0° Date built: 1915.
CONDITION: Approach piers poor with several in critical condition. Superstructure and steel trusses fair, R. concrete approach spans poor.

PROPOSED STRUCTURE

TYPE: Nine span continuous, two spans steel beam and seven spans steel girder with reinforced concrete deck and sub-structure.
SPANS: 52', 64', 91', 91', 91', 91', 91', 91', 64' % brgs.
ROADWAY: 57' f/f of 2' safety curb and 5' sidewalk.
LOAD FREQUENCY: C.F. 2000' (57).
SKEW: 9°14' Rt. Fwd. (Typ. for rear abut. & piers 1-5).
15°00' Rt. Fwd. (Typ. for fwd. abut. & piers 6-8).
WEARING SURFACE: 1" Monolithic conc.
APPROACH SLAB: Special (25' long).
ALIGNMENT: - Tangent.

STARK COUNTY, OHIO
COUNTY COMMISSIONERS

2/24

SITE PLAN

OBERLIN VIADUCT (RELOC) OVER TUSCARAWAS RIVER and B. & O. R.R. and N. & W. RAILWAY

STARK COUNTY
PE.-17-33

STA. 189+17.15
TO STA. 196+45.48

DESIGNED	DRAWN	TRACED	CHECKED	REVIEWED
M.Y.	A.S.B.		M.K.	

E. S. PRESTON & ASSOCIATES, LTD.
COLUMBUS, OHIO

FED. RD. DIVISION	STATE	PROJECT	
2	OHIO	SU 1509(I)	

31/57

STARK COUNTY ROAD 374

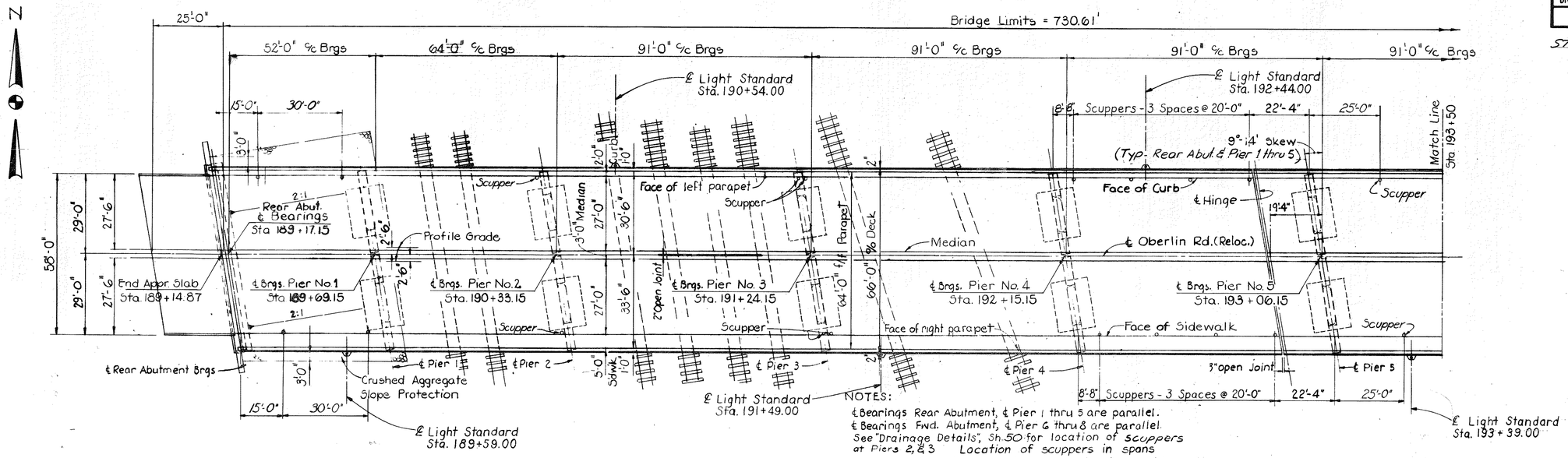

NOTES:
℄ Bearings Rear Abutment, ℄ Pier 1 thru 5 are parallel.
℄ Bearings Fwd. Abutment, ℄ Pier 6 thru 8 are parallel.
See "Drainage Details", Sh. 50 for location of scuppers at Piers 2, & 3. Location of scuppers in spans may vary from locations shown in order to avoid interference with crossframes, with due consideration for relation to substructure location.
All scupper are Type 2.
For additional lighting details see sheet 47

GENERAL PLAN

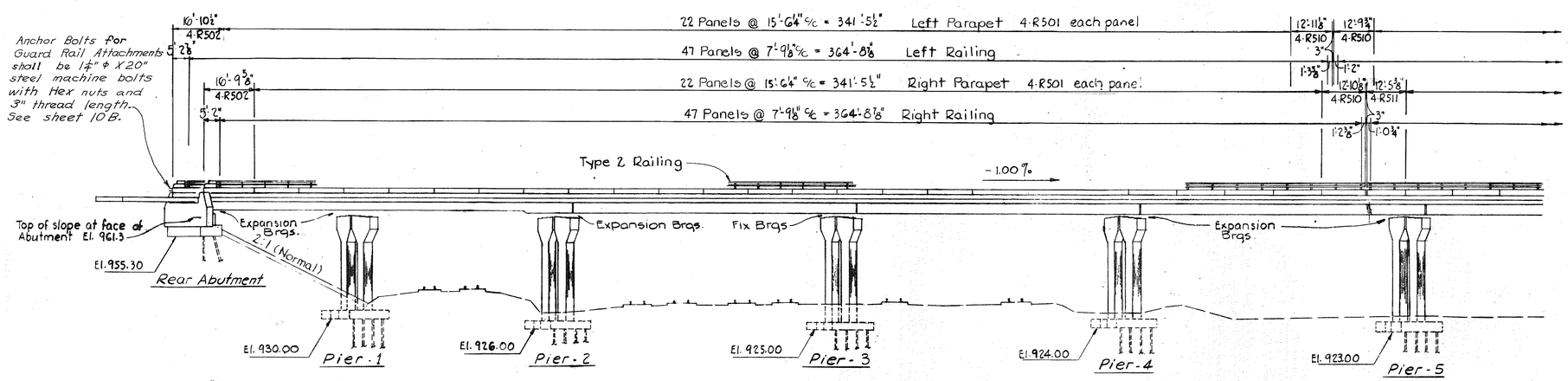

All piles 12" ϕ Cast-in-place reinforced concrete.
Only end piles are shown.

ELEVATION

STARK COUNTY, OHIO 3/24

OBERLIN ROAD VIADUCT (Relocated)

GENERAL PLAN

STA. 189+14.87 to STA. 196+45.48

DESIGNED	DRAWN BY	TRACED BY	CHECKED BY	REVIEWED	REVISED
	J.R.	J.R.	M.K.		

E. S. PRESTON & ASSOCIATES, LTD

FED. RD. DIVISION	STATE	PROJECT	
2	OHIO	SU1509(1)	

32/57

STARK COUNTY ROAD 374

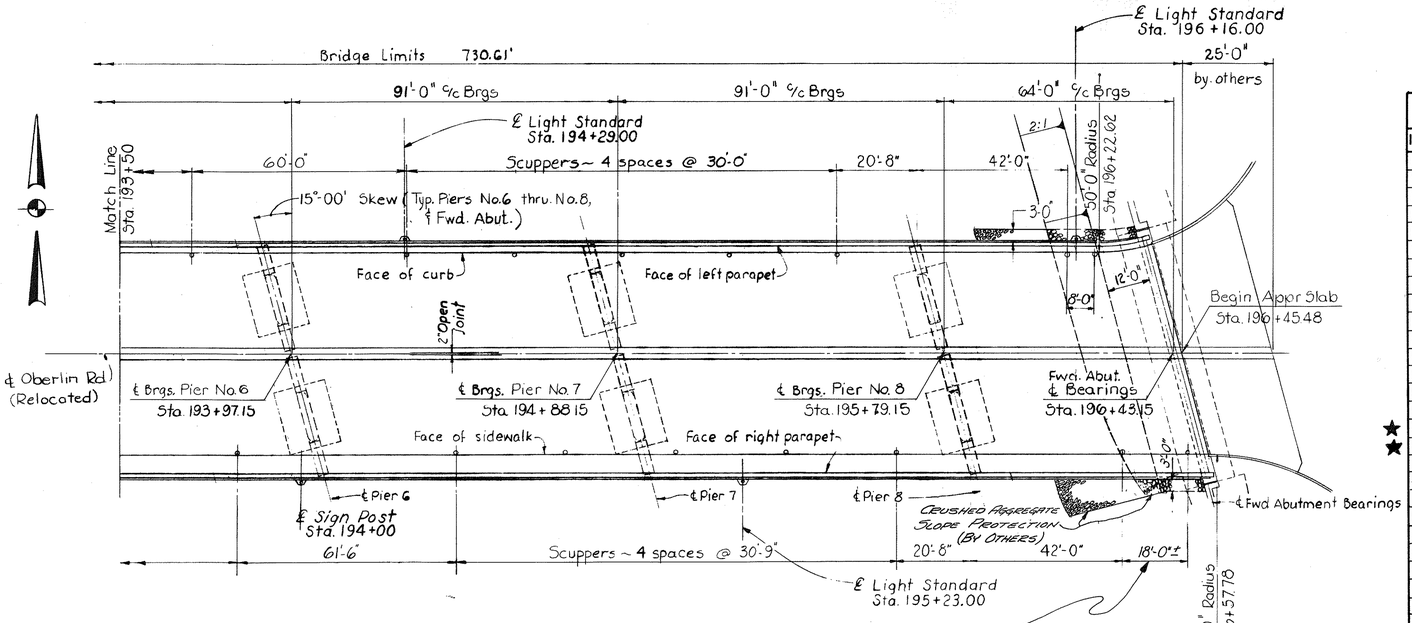

GENERAL PLAN

Notes: Location of scuppers may deviate from that shown on plan in order to miss crossframes, with due consideration for relation to substructure location.
All scuppers are Type 2.

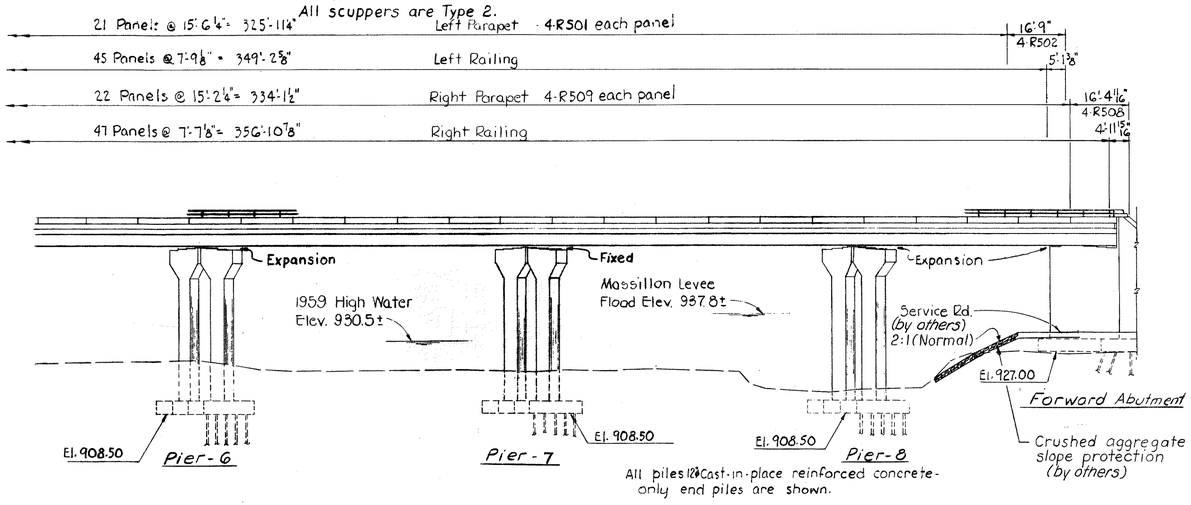

ELEVATION

ESTIMATED QUANTITIES

ITEM	TOTAL	UNIT	DESCRIPTION	ABUTS.	PIERS	SUPER STRUCT.	GENERAL		
503	LUMP	SUM	COFFERDAMS, CRIBS AND SHEETING				LUMP		
503	2,044	CU.YD.	UNCLASSIFIED EXCAVATION	394	1,650				
505	LUMP	SUM	FIRST TEST PILE				LUMP		
506	LUMP	SUM	FIRST PILE TEST LOAD				LUMP		
506	1	EACH	SUBSEQUENT PILE TEST LOAD				1		
507	20,720	LIN. FT.	12" CAST-IN-PLACE REINFORCED CONCRETE PILES	3,320	17,400				
509	661,916	lbs.	REINFORCING STEEL	45,958	173,728	442,160			
511	122	CU.YD.	CLASS-"E" CONCRETE (rear abutment)	122					
511	115	CU.YD.	CLASS-"E" CONCRETE (forward abutment footing)	115					
511	203	CU.YD.	CLASS-"E" CONCRETE (above forward abutment footing)	203					
511	495	CU.YD.	CLASS-"E" CONCRETE (pier footings)		495				
511	1,020	CU.YD.	CLASS-"C" CONCRETE (above pier footings)		1,020				
511	1,684	CU.YD.	CLASS-"C" CONCRETE (superstructure)			1,684			
★ 513	1,486,350	lbs.	STRUCTURAL STEEL			1,486,350			
★ 514	1,486,350	lbs.	FIELD PAINTING OF STRUCTURAL STEEL			1,486,350			
517	1,461.1	LIN. FT.	RAILING (Type 2)			1,461.1			
518	43	CU.YD.	POROUS BACKFILL	43					
518	36	EACH	SCUPPERS (Including Supports)			36			
518	64	LIN. FT.	6" PERFORATED, HELICAL C.M.P., (Including Specials) 707.06	64					
518	116	LIN. FT.	6" ø STD. PIPE DOWNSPOUT (Hot Dip Galv. Steel Incl. Specials)	26	90				
518	38	LIN. FT.	6" ø HELICAL C.M.P. Non-Perforated, 707.06	38					
518	84	LIN. FT.	6" ø STD. PIPE DOWNSPOUT (Hot Dip Galv. Steel Incl. Specials)		84				
601	510	SQ.YD.	CRUSHED AGGREGATE SLOPE PROTECTION				510		
625	LUMP	SUM	STRUCTURE GROUNDING SYSTEM			LUMP			
625	8	SET/2	ANCHOR BOLTS FOR LIGHT STANDARDS "U"			8			
808	1,684	UNITS	WATER-REDUCING, SET-RETARDING ADMIXTURE			1,684			
816	1	SET/2	ANCHOR BOLTS FOR SIGN SUPPORT			1			
825	5,440	SQ.YD.	CONCRETE SURFACE TREATMENT	30		5,410			
828	177	LIN. FT.	JOINT SEALER	119		58			
512	38	LIN. FT.	PREMOLDED SEALING STRIP (12" x ½")	38					
518	20	LIN. FT.	12" ø BITUMINOUS COATED C.M.P. (Incl. specials) 707.05				20		
518	73	LIN. FT.	12" ø BITUMINOUS COATED, PERFORATED C.M.P. (Incl. sp.) 707.04				73		

★ Federal funds do not participate in furnishing, erecting and field painting structural steel supports for utilities; 1,700 Lbs. for telephone conduits, 650 Lbs. for gas line. = 2,350 Lbs. at 100% County.

4/24

STARK COUNTY, OHIO

OBERLIN ROAD VIADUCT (Relocated)

GENERAL PLAN

STA. 189+14.87 to STA. 196+45.48

DESIGNED	DRAWN BY	TRACED BY	CHECKED BY	REVIEWED	REVISED
	J.R.	J.R.	M.K.		

E. S. PRESTON & ASSOCIATES, LTD.

GENERAL NOTES

REFERENCE SHALL BE MADE TO STANDARD DRAWINGS BR-1-65 SHEET 2 REVISED 11-24-65, RB-1-55 REVISED 2-2-59, SD-1-65 SHEETS 1 THRU 3 DATED 11-8-65 AND TO SUPPLEMENTAL SPECIFICATIONS 808 DATED 1-13-67, 811 DATED 1-1-67, 825 DATED 1-1-67, 828 DATED 1-1-67, AND 816 DATED 8-6-65.

DESIGN SPECIFICATIONS: THIS STRUCTURE CONFORMS TO THE REQUIREMENTS OF "DESIGN SPECIFICATIONS FOR HIGHWAY STRUCTURES" OF STATE OF OHIO, DEPARTMENT OF HIGHWAYS DATED 9-1-57, TOGETHER WITH CURRENT REVISIONS THEREOF:

DESIGN LOADING - C.F. 2,000 (57).

CONCRETE CLASS C - BASIC UNIT STRESS 1,333 P.S.I.

CONCRETE CLASS E - BASIC UNIT STRESS 1,133 P.S.I.

STRUCTURAL STEEL - ASTM A36 - BASIC UNIT STRESS 20,000 P.S.I.

REINFORCING STEEL - ASTM A15, A16, A160, DEFORMED INTERMEDIATE OR HARD GRADE. BASIC UNIT STRESS 20,000 P.S.I.

MACHINE FINISH: THE CONCRETE BRIDGE DECK SHALL BE FINISHED BY THE USE OF A FINISHING MACHINE.

UTILITY LINES: ALL EXPENSE INVOLVED IN RELOCATION (INSTALLING) THE AFFECTED UTILITY LINES SHALL BE BORNE BY THE OWNER(S) THE CONTRACTOR AND OWNER(S) ARE REQUESTED TO COOPERATE BY ARRANGING THEIR WORK IN SUCH A MANNER THAT INCONVENIENCE TO EITHER WILL BE HELD TO A MINIMUM.

ALL PILES SHALL BE 12 INCH CAST-IN-PLACE REINFORCED CONCRETE PILES.

PILES SHALL BE DRIVEN TO A MINIMUM BEARING CAPACITY OF 40 TONS PER PILE FOR THE PIERS, 40 TONS PER PILE FOR THE FORWARD ABUTMENT, AND 35 TONS PER PILE FOR THE REAR ABUTMENT.

SHEETING AND BRACING: BEFORE CONSTRUCTION IS STARTED, THIRTEEN (13) SETS OF PRINTS SHOWING DETAILS OF THE SHEETING AND BRACING TO BE USED FOR EXCAVATION ADJACENT TO THE RAILROAD TRACKS SHALL BE SUBMITTED TO THE DIRECTOR FOR APPROVAL BY THE DEPARTMENT OF HIGHWAYS AND BY THE RAILROAD COMPANIES.

ALIGNING RAILROAD TRACKS: AFTER THE CONTRACTOR HAS COMPLETED ALL EXCAVATION AND BACKFILL ADJACENT TO THE RAILROAD TRACKS IN COMPLIANCE WITH SEC. 503.04 AND 503.09 OF THE CONSTRUCTION AND MATERIAL SPECIFICATIONS SUBJECT TO THE SUPERVISION OF THE RAILROAD COMPANIES, NOTHING IN SEC. 503.04, 503.09, 108.04 OF THE SPECIFICATIONS SHALL BE CONSTRUED TO HOLD THE CONTRACTOR LIABLE FOR ALIGNING AND RESURFACING THE RAILROAD TRACKS.

RAILROAD AERIAL LINES WILL BE RELOCATED BY THE RAILROAD. THE CONTRACTOR SHALL USE ALL PRECAUTIONS NECESSARY TO SEE THAT THE LINES ARE NOT DISTURBED DURING THE CONSTRUCTION STAGE AND SHALL COOPERATE WITH THE RAILROAD IN THE RELOCATION OF THESE LINES. THE COST OF THE RELOCATION SHALL BE INCLUDED IN THE RAILROAD FORCE ACCOUNT WORK.

CONSTRUCTION CLEARANCE OF 20 FEET VERTICALLY ABOVE THE TOP OF THE RAILROAD RAILS AND 8 FEET HORIZONTALLY FROM THE CENTER OF TRACKS SHALL BE MAINTAINED AT ALL TIMES.

DECKING PLACING PROCEDURE: IN PLACING THE DECK CONCRETE CONSTRUCTION JOINTS WILL BE PERMITTED, PARALLEL TO THE TRANSVERSE REINFORCING STEEL AND NEAR THE MIDDLE OF ANY SPAN. BECAUSE OF THE FLOW OF CURING WATER FROM THE SURFACE OF THE PREVIOUSLY PLACED DECK CONCRETE, THE SEQUENCE OF POURS SHALL BE UPGRADE, STARTING AT THE LOWEST POINT OR POINTS IN THE GRADE LINE.

AGGREGATE FOR CLASS "C" CONCRETE SHALL CONSIST OF EITHER SLAG OR LIMESTONE. THE USE OF GRAVEL AGGREGATE WILL NOT BE PERMITTED.

Pedestrian Traffic shall be maintained on the existing bridge until traffic is permitted on the new bridge.

CONSTRUCTION WORK ON THE OBERLIN ROAD VIADUCT WILL BE AFFECTED BY THE CONSTRUCTION OF THE U.S. ROUTE 21 PROJECT WHICH WILL BE BUILT SIMULTANEOUSLY PRESUMABLY BY OTHERS, UNDER A SEPARATE CONTRACT. TO AVOID UNNECESSARY DELAYS AND TO DEFINE THE WORK REQUIRED UNDER SEPARATE CONTRACTS, THE FOLLOWING CONSTRUCTION PROCEDURE IS ESTABLISHED. IF BOTH CONTRACTS ARE LET TO THE SAME CONTRACTOR, THIS PROCEDURE MAY BE REVISED, BUT ONLY WITH THE APPROVAL OF THE DIRECTOR.

1) ROADWAY FILL IN THE VICINITY OF THE EAST ABUTMENT AND WINGWALLS SHALL BE PLACED TO ELEVATION 930.0 UNDER THIS CONTRACT.

2) EXCAVATION SHALL THEN BE MADE, PILING DRIVEN, FOOTING CONCRETE PLACED AND WALLS POURED FOR THE FORWARD ABUTMENT AND ADJACENT RETAINING WALLS FOR THE VIADUCT UNDER THIS CONTRACT.

3) PLACEMENT OF POROUS BACKFILL BEHIND ABUTMENT AND RETAINING WALLS, STRUCTURE BACKFILL, CONSTRUCTION OF ACCESS ROAD AND NECESSARY FILL UNDER THE OBERLIN ROAD VIADUCT AND PLACEMENT OF ROADWAY FILL FOR RAMPS A AND B AND OBERLIN ROAD FROM STATION 196+45.48 FORWARD SHALL BE DONE BY OTHERS UNDER SEPARATE CONTRACT.

4) CRUSHED AGGREGATE SLOPE PROTECTION UNDER THE OBERLIN ROAD VIADUCT SHALL BE PLACED BY OTHERS AFTER THE SANITARY SEWER IS INSTALLED AND THE FILL FOR THE SERVICE ROAD IS COMPACTED BY THE U.S. ROUTE 21 CONTRACTOR. (AT EAST ABUTMENT ONLY)

FULL COOPERATION OF THE SEPARATE CONTRACTORS WITH REGARD TO UTILIZATION OF STORAGE SPACE, DISPOSAL OR STORAGE OF EXCAVATED MATERIAL, REMOVAL OF FORMWORK, CONCRETE FINISHING OPERATIONS, PLACEMENT OF BACKFILL AND ERECTION OF RAILING IS REQUIRED. PAYMENT FOR ANY EXPENSE INVOLVED UNDER THIS CONTRACT DUE TO THE SIMULTANEOUS PERFORMANCE OF THE OTHER CONTRACT SHALL BE INCLUDED IN THE UNIT PRICES BID FOR THE VARIOUS ITEMS AND NO ADDITIONAL PAYMENT WILL BE MADE.

FED. RD. DIVISION	STATE	PROJECT	
2	OHIO	SU 1509(1)	

STARK COUNTY ROAD 374

NOTES

LEGEND: n.s. denotes near side, f.s. denotes far side.

POROUS BACKFILL shall extend upward to the approach slab and to the surface of the earth shoulders and outward to the surface of the embankment slopes. Excavation, therefore, in excess of that required for construction of the abutment, shall be considered as paid for in the bid price per cu. yd. paid for porous backfill.

PROCEDURE: The embankment shall be placed and compacted up to the finished spill-thru slope and to the level of the subgrade for a distance of 200 feet back of the abutment. After a minimum waiting period of 180 days, the excavation shall be made for the abutment and for piers that are set in the fill area (Pier No. 1), and the piles shall be driven.

BACKWALL CONCRETE shall not be placed until all utility ducts carried on superstructure are installed. Owner of the utilities shall provide the necessary sleeves thru abutment backwalls.

CONCRETE shall be class "E" concrete.

EXCAVATION QUANTITY includes removal of fill material required for construction of the rear abutment, and Pier No. 1.

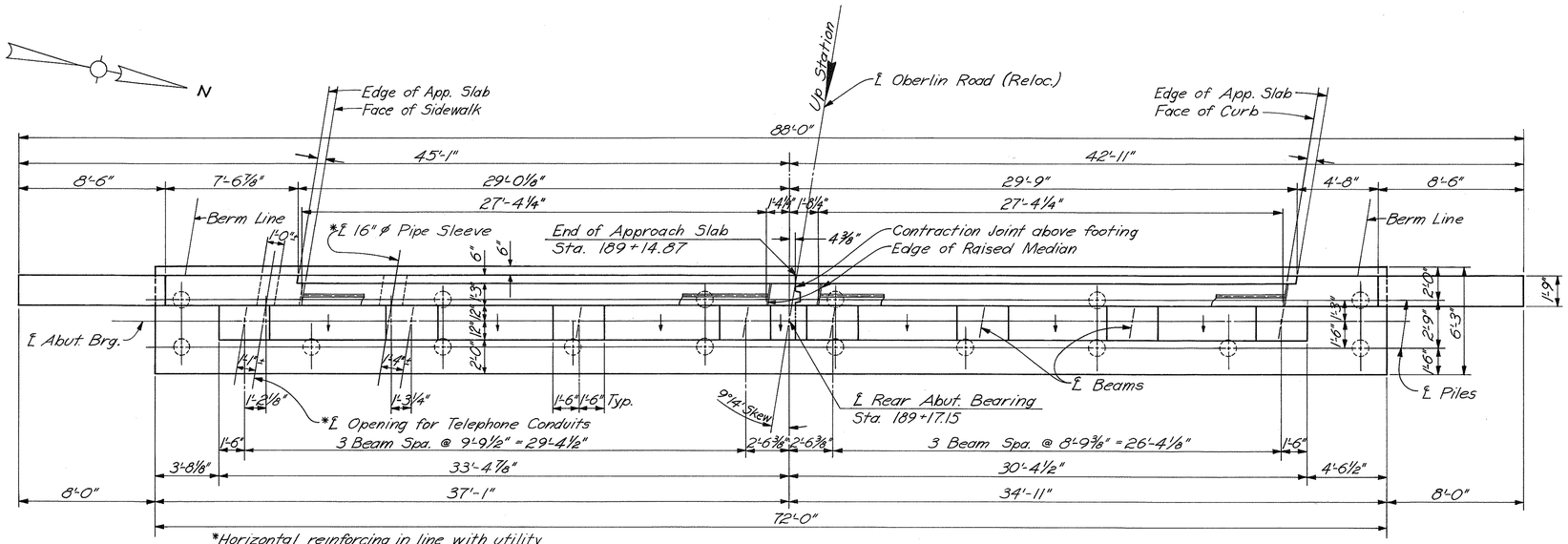

*Horizontal reinforcing in line with utility openings will be cut as required.
Vertical reinforcing in line with utility openings will be respaced in field as required.

PLAN

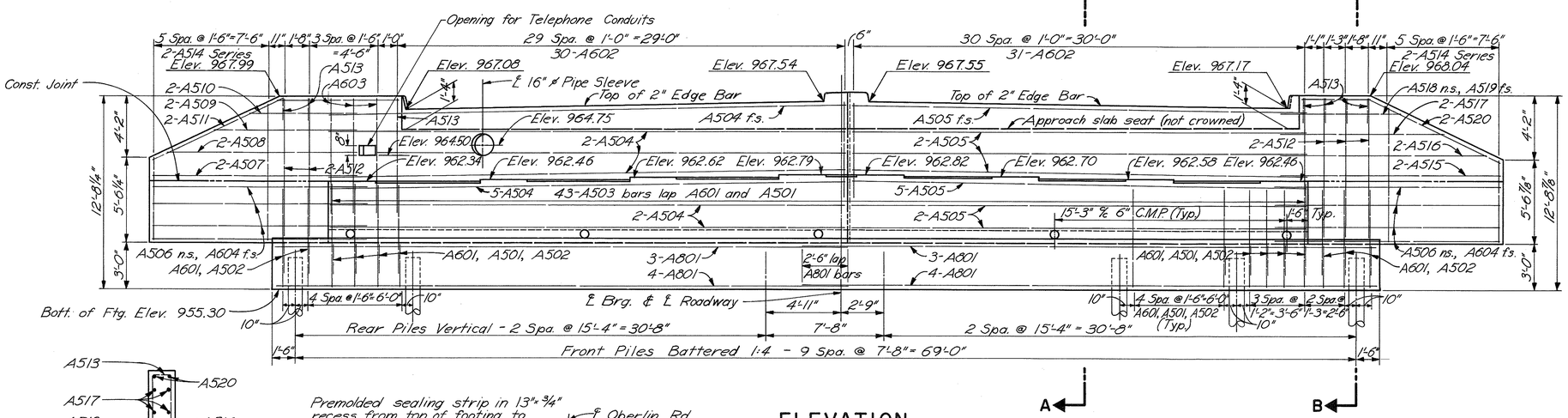

ELEVATION

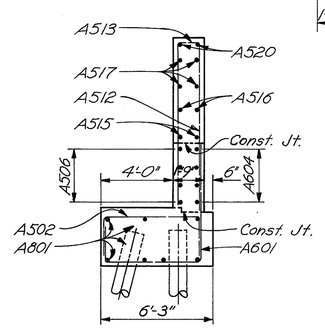

SECTION B-B

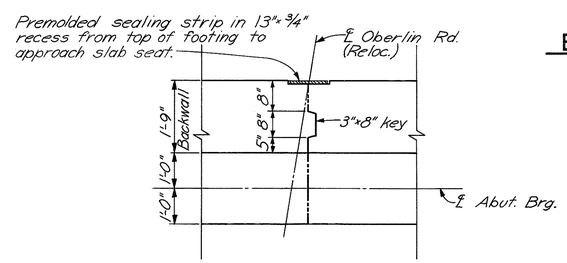

DETAIL OF CONTRACTION JOINT

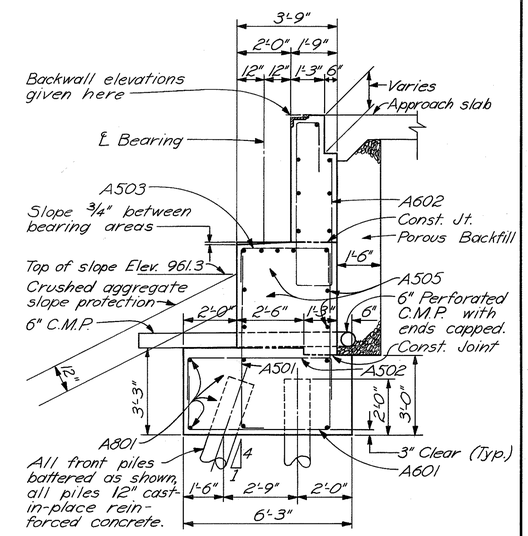

SECTION A-A

STARK COUNTY, OHIO | 6/24

OBERLIN ROAD VIADUCT (Relocated)

REAR ABUTMENT WALL

STA. 189 + 14.87 to STA. 196 + 45.48

DESIGNED	DRAWN BY	TRACED BY	CHECKED BY	REVIEWED	REVISED

E. S. PRESTON & ASSOCIATES, LTD.

FED. RD. DIVISION	STATE	PROJECT	
2	OHIO	SU1509(I)	

35 / 57

STARK COUNTY ROAD 374

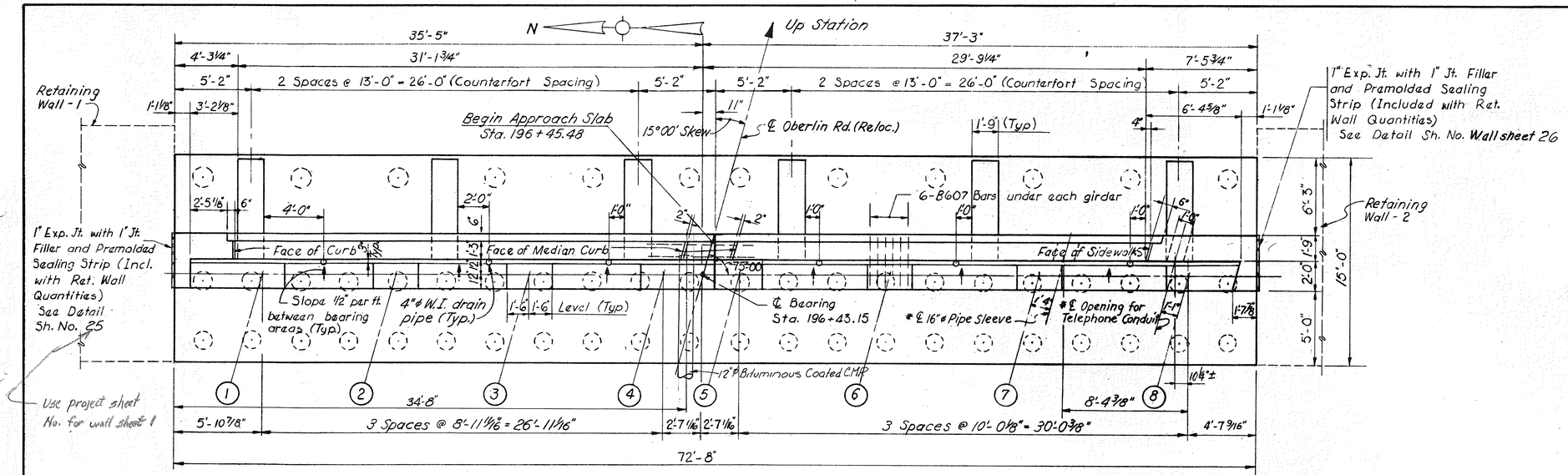

PLAN

LEGEND:
NF denotes Near Face
FF denotes Far Face

* Horizontal reinforcing in line with utility openings will be cut as required. Vertical reinforcing in line with utility openings will be respaced in field as required.

NOTES

CONCRETE ABOVE BRIDGE SEAT construction joint shall not be placed until superstructure steel is in place, and not until all utility ducts carried on superstructure are installed. Owner of utilities shall provide to the contractor the necessary sleeves thru abutment backwall.

ALL CONCRETE shall be Class - "E".
PROCEDURE: Fill material shall be placed and compacted to finished spill-thru slope and to Elev. 930.0 after which excavation shall be made for abutment and piles driven. Before the backwall is constructed the embankment shall be placed and compacted up to the level of the subgrade, with a 1:1 slope from the bridge seat to the subgrade. The distance of compaction in back of the abutment shall be co-ordinated with the adjoining U.S. Rt. 21 project. (See General Notes)

EXCAVATION QUANTITY includes the removal of fill material required for construction of abutment.

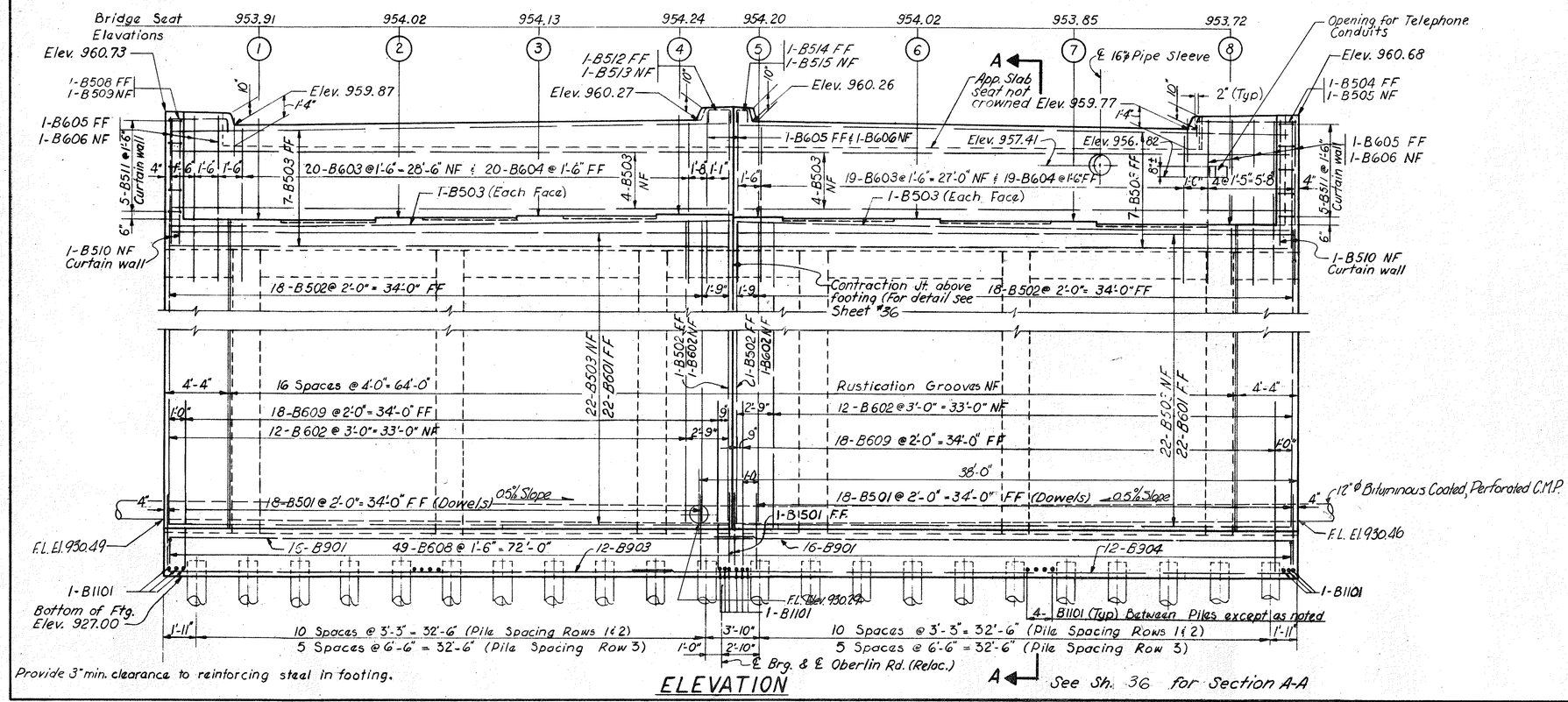

Provide 3" min. clearance to reinforcing steel in footing.

ELEVATION

STARK COUNTY, OHIO					7/24
OBERLIN ROAD VIADUCT (Relocated)					
FORWARD ABUTMENT WALL					
STA. 189+14.87 to STA. 196+45.48					
DESIGNED M.K.	DRAWN BY M.Y.	TRACED BY	CHECKED BY N.E.N.	REVIEWED	REVISED
E. S. PRESTON & ASSOCIATES, LTD.					

FED. RD. DIVISION	STATE	PROJECT	
2	OHIO	SU 1509(1)	

36/57

STARK COUNTY ROAD 374

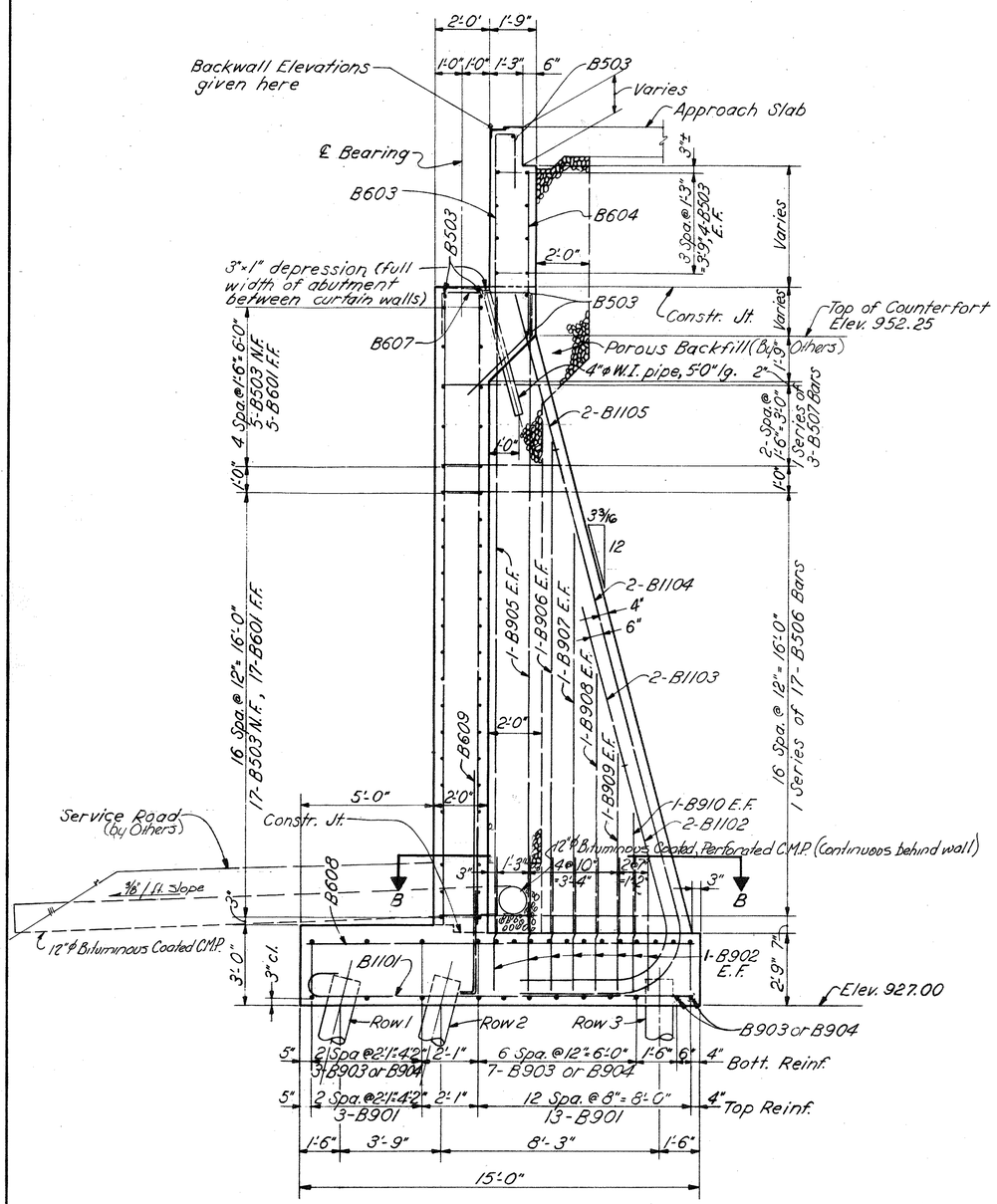

SECTION A-A

NOTE:
Batter all piles in Rows 1 & 2 (1:3).
All piles 12"φ cast-in-place reinforced concrete.

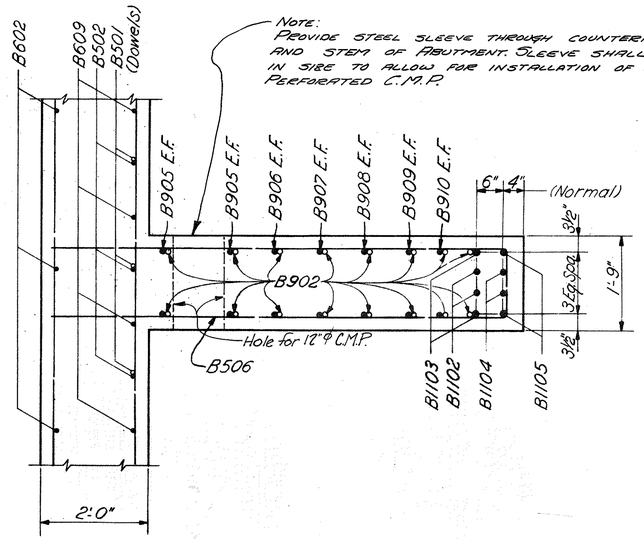

SECTION B-B

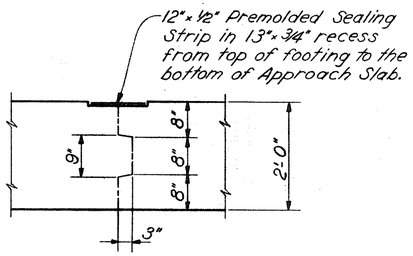

CONTRACTION JOINT

STARK COUNTY, OHIO 8/24

OBERLIN ROAD VIADUCT (Relocated)

FORWARD ABUTMENT WALL

STA. 189+14.87 to STA. 196+45.48

DESIGNED	DRAWN BY	TRACED BY	CHECKED BY	REVIEWED	REVISED
M.K.	A.J.M.		N.E.N.		

E. S. PRESTON & ASSOCIATES, LTD.

FED. RD. DIVISION	STATE	PROJECT	
2	OHIO	SU 1509(1)	

37/57

STARK COUNTY ROAD 374

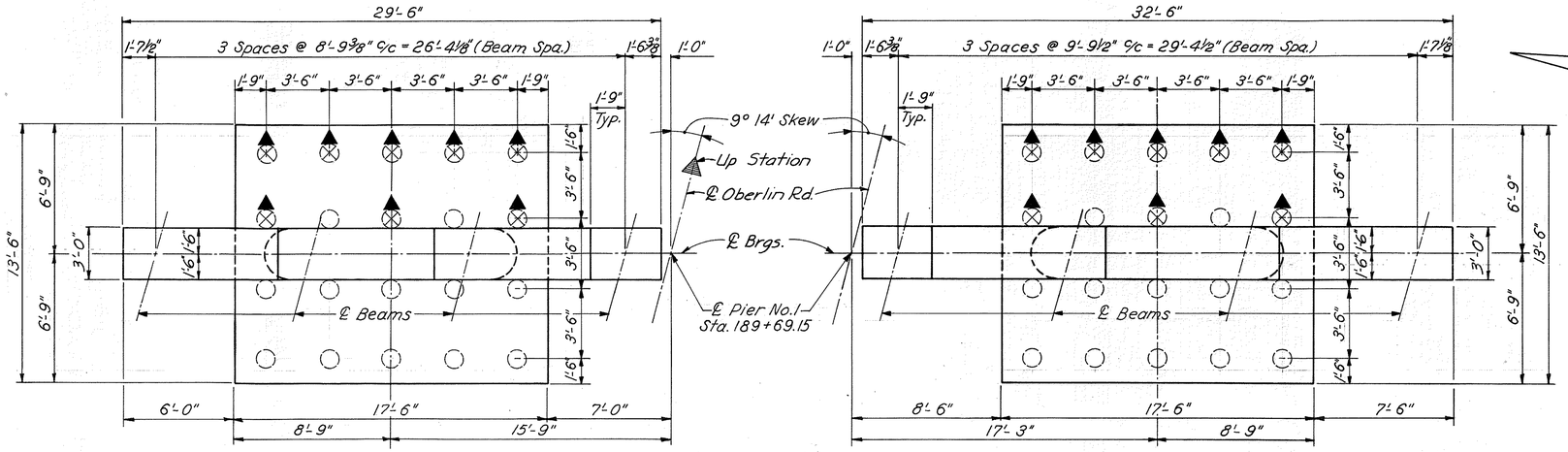

PLAN W.B.L. — PIER PLAN — PLAN E.B.L.

PILE LEGEND

- Vertical Pile
- Battered Pile 1:4 (and direction of batter)

Note: For additional notes see Pier Details, Sheet No. 38.
Piling shall be 12"ϕ Cast-in-place Reinforced concrete.

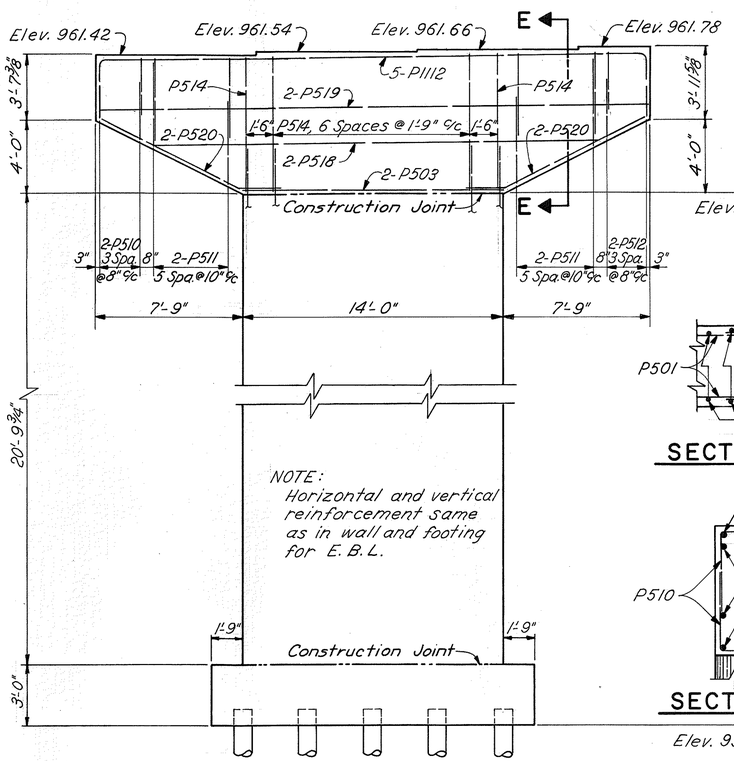

ELEVATION W.B.L.

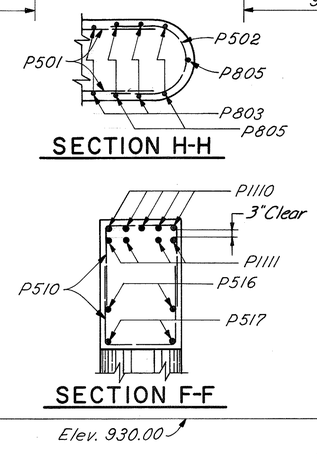

SECTION H-H

SECTION F-F

PIER ELEVATION

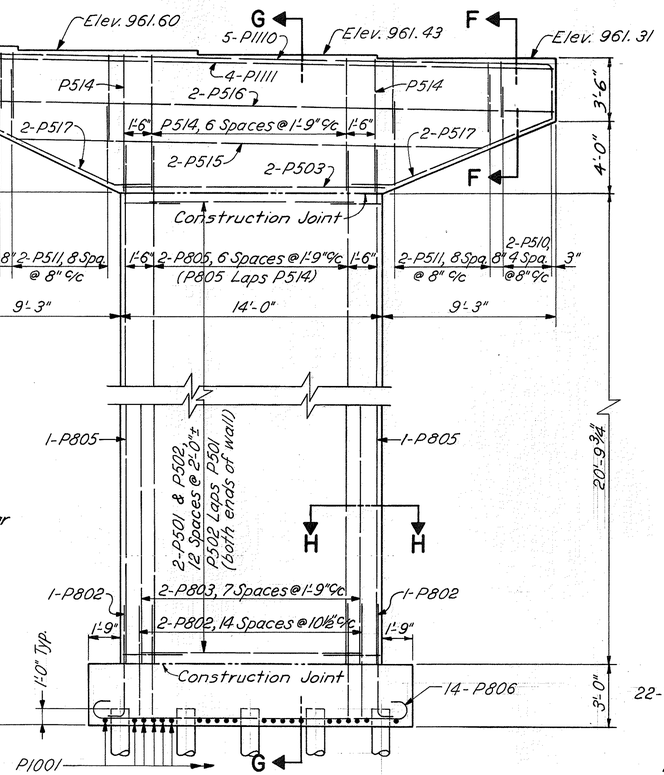

ELEVATION E.B.L.

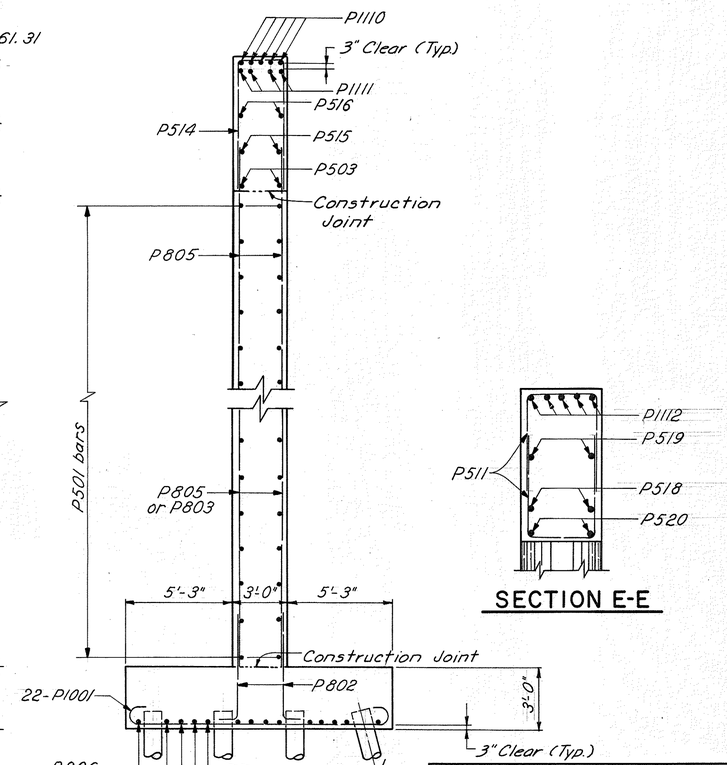

SECTION E-E

SECTION G-G

LEGEND:
E.B.L. designates East Bound Lane
W.B.L. designates West Bound Lane

STARK COUNTY, OHIO — 9/24

OBERLIN ROAD VIADUCT (Relocated)

PIER DETAILS

PIER NO. 1

STA. 189+14.87 to STA. 196+45.48

DESIGNED	DRAWN	TRACED	CHECKED	REVIEWED	REVISED
AB	AJM		NN		

E. S. PRESTON & ASSOCIATES, LTD.

FED. RD. DIVISION	STATE	PROJECT	
2	OHIO	SU 1509(1)	

STARK COUNTY ROAD 374

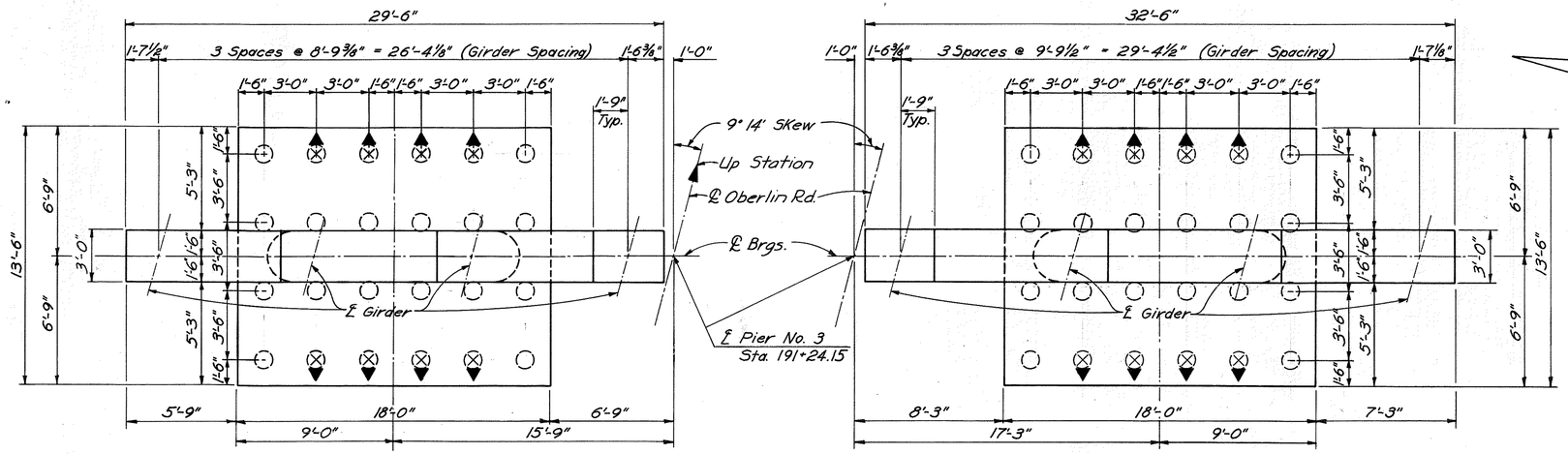

PLAN W.B.L. — PIER PLAN — PLAN E.B.L.

BRIDGE SEAT REINFORCING: Special care shall be taken in placing reinforcing steel in the vicinity of the bridge seat so as to avoid interference with the drilling of anchor holes.

PILE LEGEND

- Vertical Pile
- Battered Pile 1:4 (and direction of batter)

Note: For additional notes see Pier Details, Sheet No. 38. Piling shall be 12"ϕ Cast-in-place Reinforced concrete.

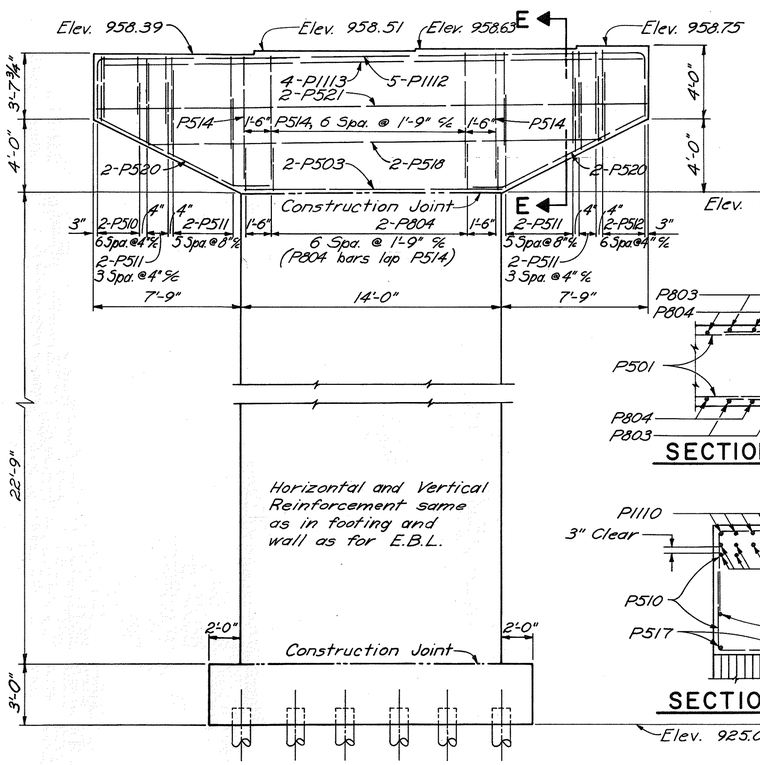

ELEVATION W.B.L.

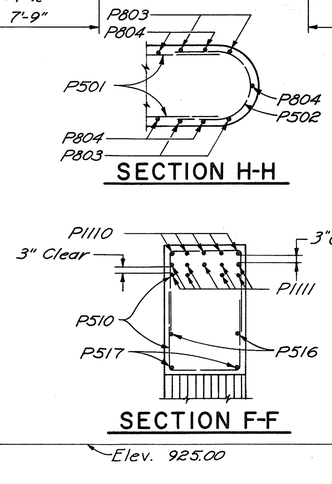

PIER ELEVATION

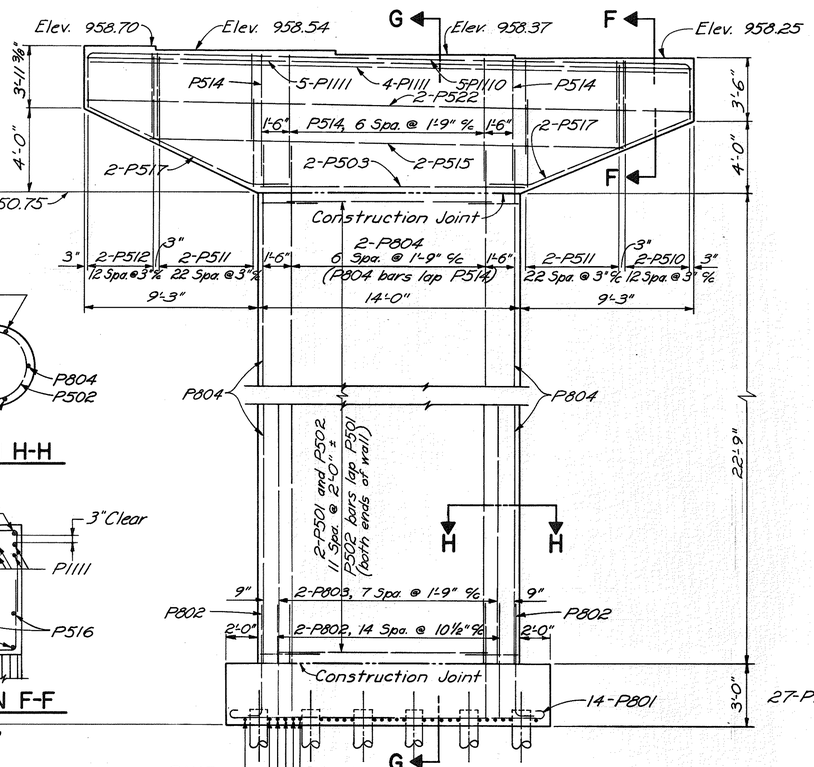

ELEVATION E.B.L.

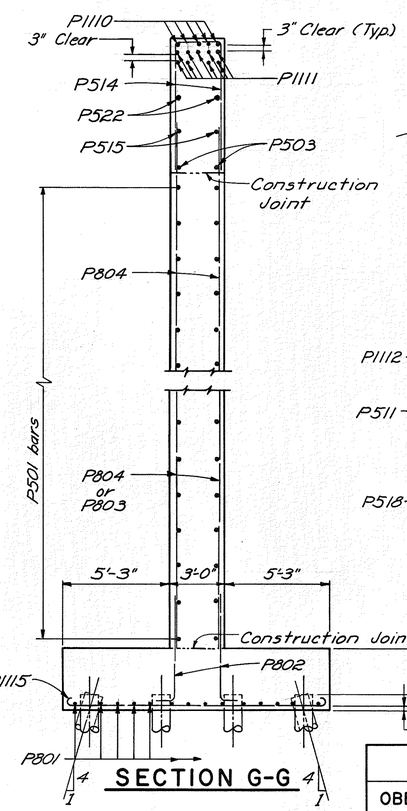

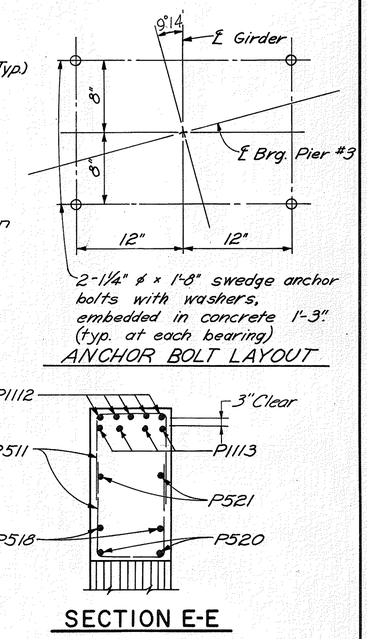

LEGEND:
E.B.L. designates East Bound Lane
W.B.L. designates West Bound Lane

STARK COUNTY, OHIO — 11/24

OBERLIN ROAD VIADUCT (Relocated)

PIER DETAILS
PIER NO. 3

STA. 189+14.87 to STA. 196+45.48

DESIGNED	DRAWN	TRACED	CHECKED	REVIEWED	REVISED
AB	AJM		NN		

E. S. PRESTON & ASSOCIATES, LTD.

FED. RD. DIVISION	STATE	PROJECT	
2	OHIO	SU1509(1)	

38/57

STARK COUNTY ROAD 374

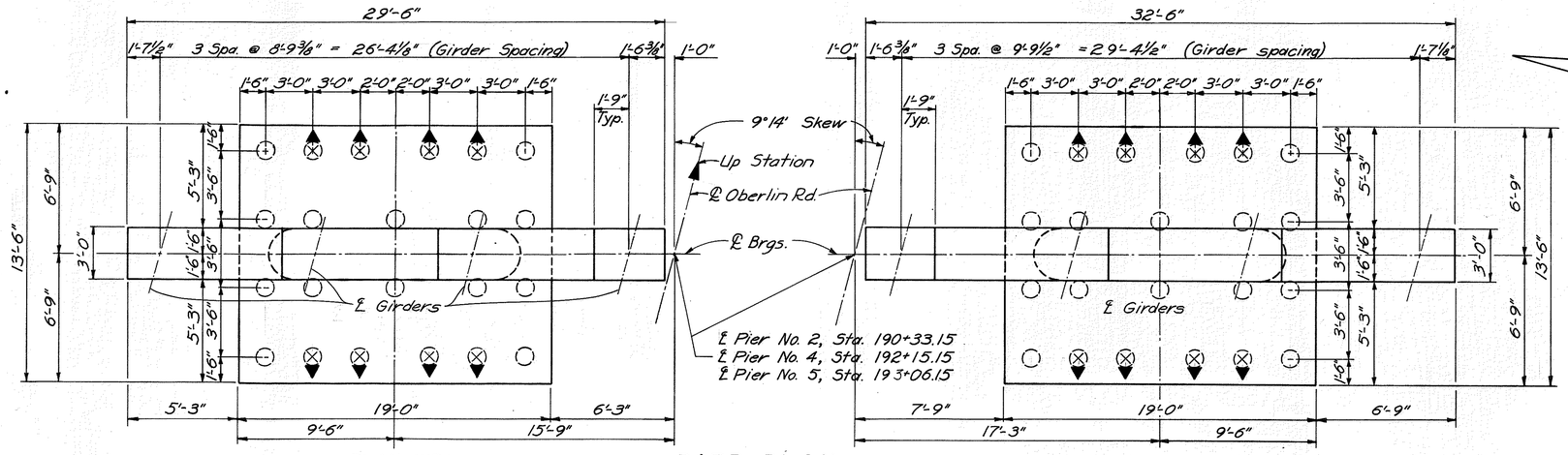

PLAN W.B.L.

PIER PLAN

PLAN E.B.L.

PILE LEGEND

- Vertical Pile
- Battered Pile 1:4 (and direction of batter)

Note: CONCRETE shall be Class "C" for pier above footings and Class "E" for pier footings.

Piling shall be 12"ϕ Cast-in-place Reinforced concrete.

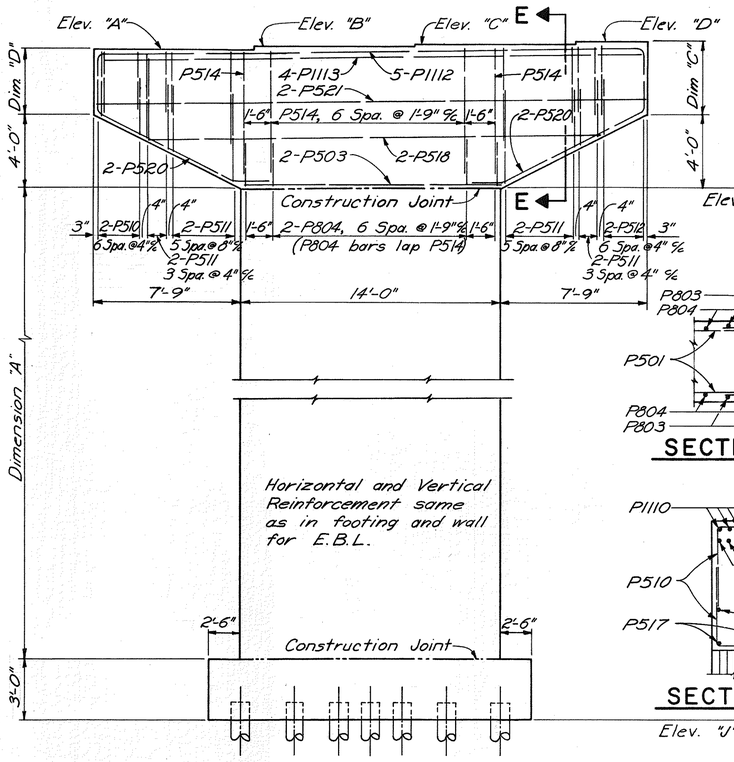

ELEVATION W.B.L.

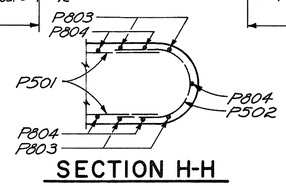

SECTION H-H

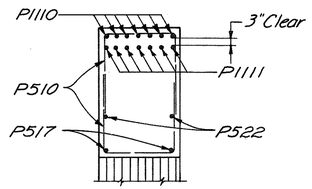

SECTION F-F

Elev. "J"

PIER ELEVATION

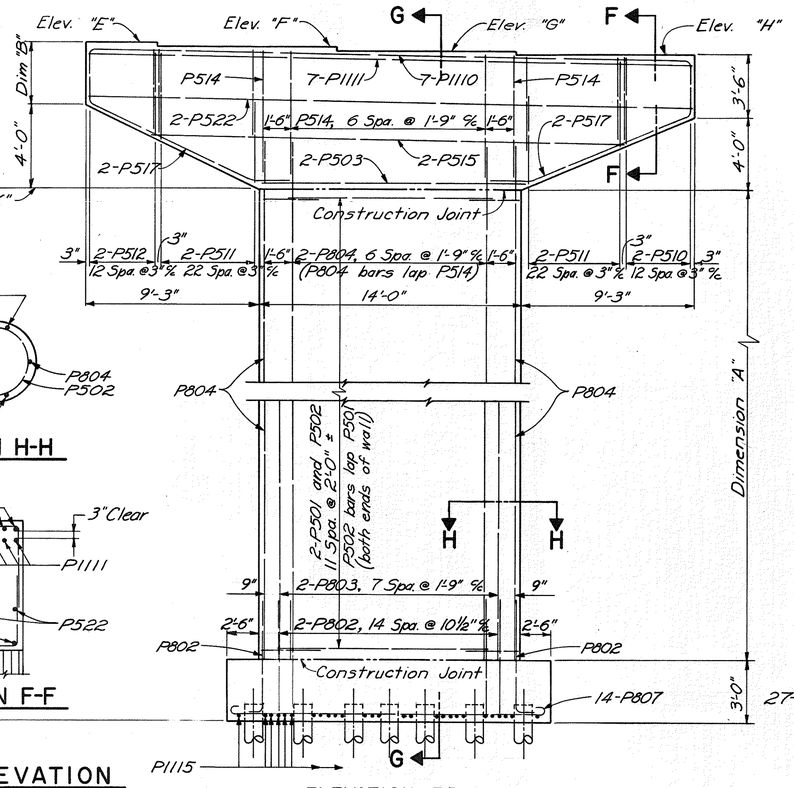

ELEVATION E.B.L.

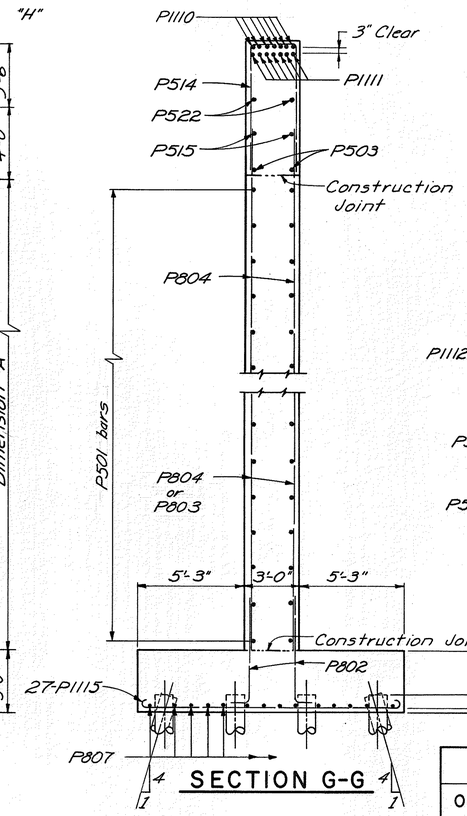

SECTION G-G

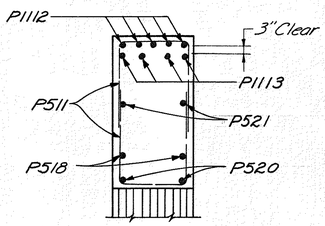

SECTION E-E

Location	Elev. "A"	Elev. "B"	Elev. "C"	Elev. "D"	Elev. "E"	Elev. "F"	Elev. "G"	Elev. "H"	Elev. "J"	Elev. "K"	Dim. "A"	Dim. "B"	Dim. "C"	Dim. "D"
Pier No. 2	959.48	959.60	959.72	959.84	959.79	959.62	959.46	959.34	926.00	951.84	22'-10⅛"	3'-11⅜"	4'-0"	3'-7¾"
Pier No. 4	957.55	957.67	957.80	957.92	957.88	957.71	957.54	957.42	924.00	949.92	22'-11"	3'-11½"	4'-0"	3'-7⅝"
Pier No. 5	956.57	956.69	956.81	956.93	956.88	956.72	956.55	956.43	923.00	948.93	22'-11⅛"	3'-11⅜"	4'-0"	3'-7¾"

LEGEND:
E.B.L. designates East Bound Lane
W.B.L. designates West Bound Lane

STARK COUNTY, OHIO 10/24

OBERLIN ROAD VIADUCT (Relocated)

PIER DETAILS
PIER NO's 2, 4 & 5

STA. 189+14.87 to STA. 196+45.48

DESIGNED	DRAWN	TRACED	CHECKED	REVIEWED	REVISEL

E. S. PRESTON & ASSOCIATES, LTD.

FED. RD. DIVISION	STATE	PROJECT	
2	OHIO	SU 1509(1)	

STARK COUNTY ROAD 374

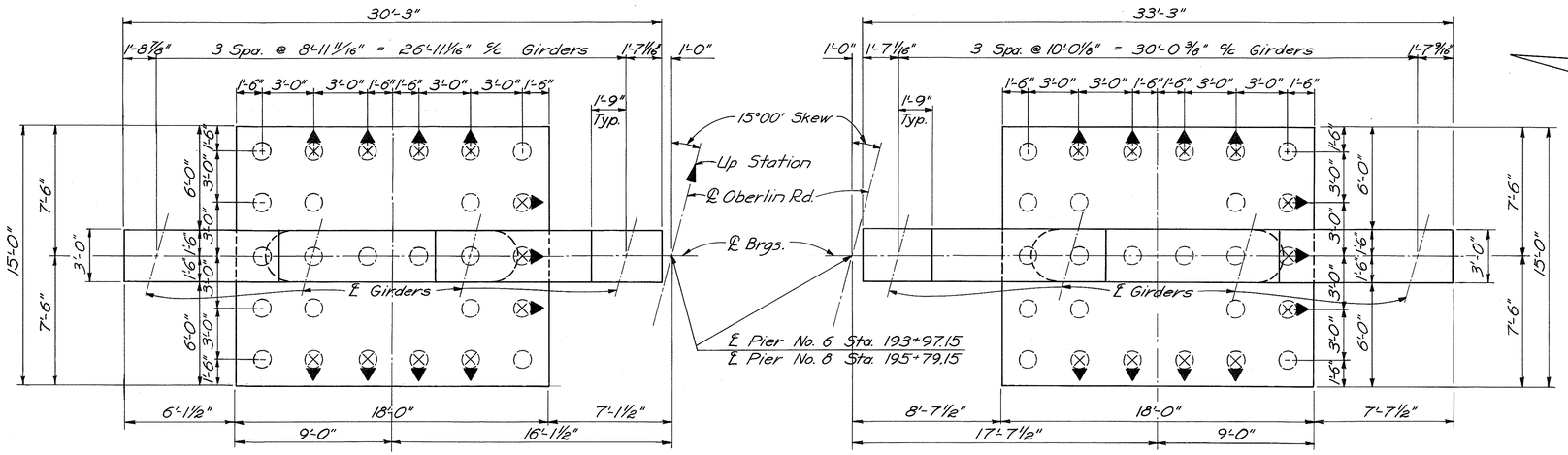

PLAN W.B.L.

PIER PLAN

PLAN E.B.L.

PILE LEGEND

Vertical Pile

Battered Pile 1:4 (and direction of batter)

Note: For additional notes see Pier Details, Sheet No. 38. Piling shall be 12"ϕ Cast-in-place Reinforced concrete.

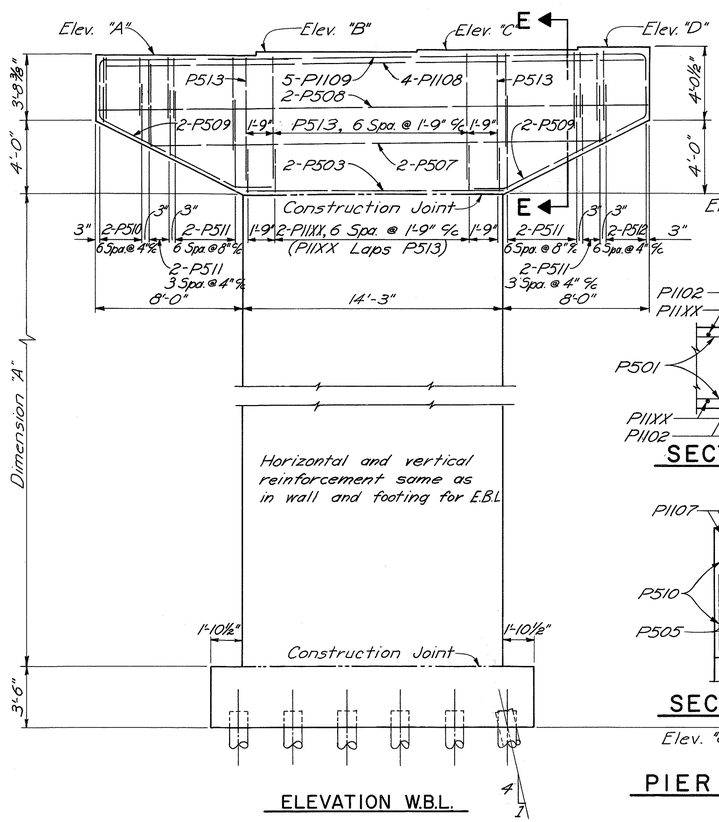

ELEVATION W.B.L.

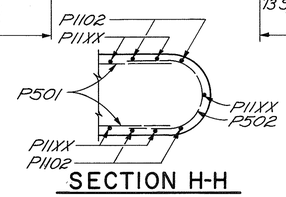

SECTION H-H

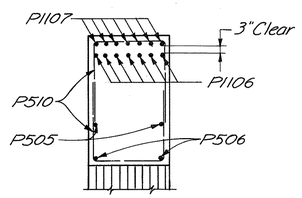

SECTION F-F

PIER ELEVATION

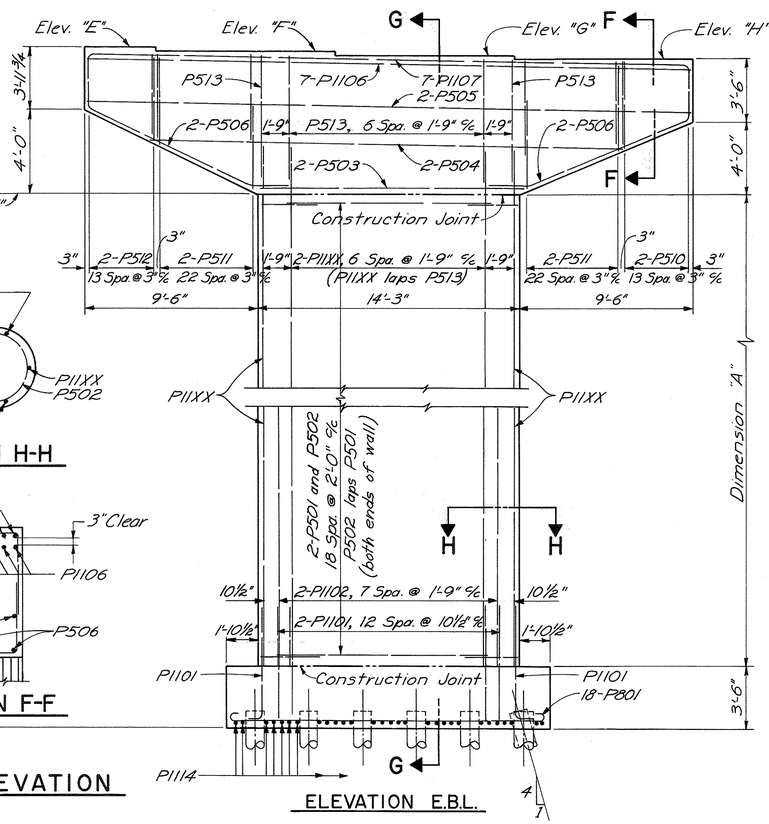

ELEVATION E.B.L.

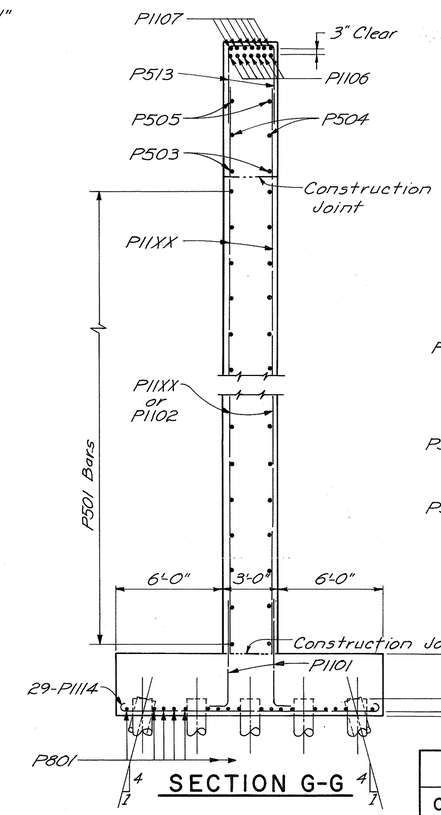

SECTION G-G

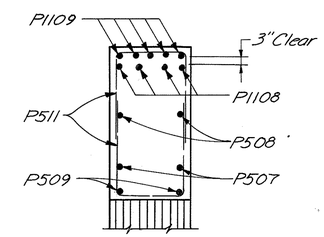

SECTION E-E

Location	Elev. "A"	Elev. "B"	Elev. "C"	Elev. "D"	Elev. "E"	Elev. "F"	Elev. "G"	Elev. "H"	Elev. "J"	Elev. "K"	Dim. "A"	P1XX bars
Pier No. 6	955.68	955.79	955.90	956.02	955.96	955.78	955.61	955.48	908.50	947.98	35'-11¾"	P1103
Pier No. 8	953.95	954.07	954.18	954.29	954.23	954.06	953.88	953.75	908.50	946.25	34'-3"	P1105

LEGEND:

E.B.L. designates East Bound Lane

W.B.L. designates West Bound Lane

STARK COUNTY, OHIO 12/24

OBERLIN ROAD VIADUCT (Relocated)

PIER DETAILS
PIER NO's 6 & 8

STA. 189+14.87 to STA. 196+45.48

DESIGNED	DRAWN	TRACED	CHECKED	REVIEWED	REVISED
AB	AJM		MK		

E. S. PRESTON & ASSOCIATES, LTD.

FED. RD. DIVISION	STATE	PROJECT	
2	OHIO	SU 1509(1)	

41/57

STARK COUNTY ROAD 374

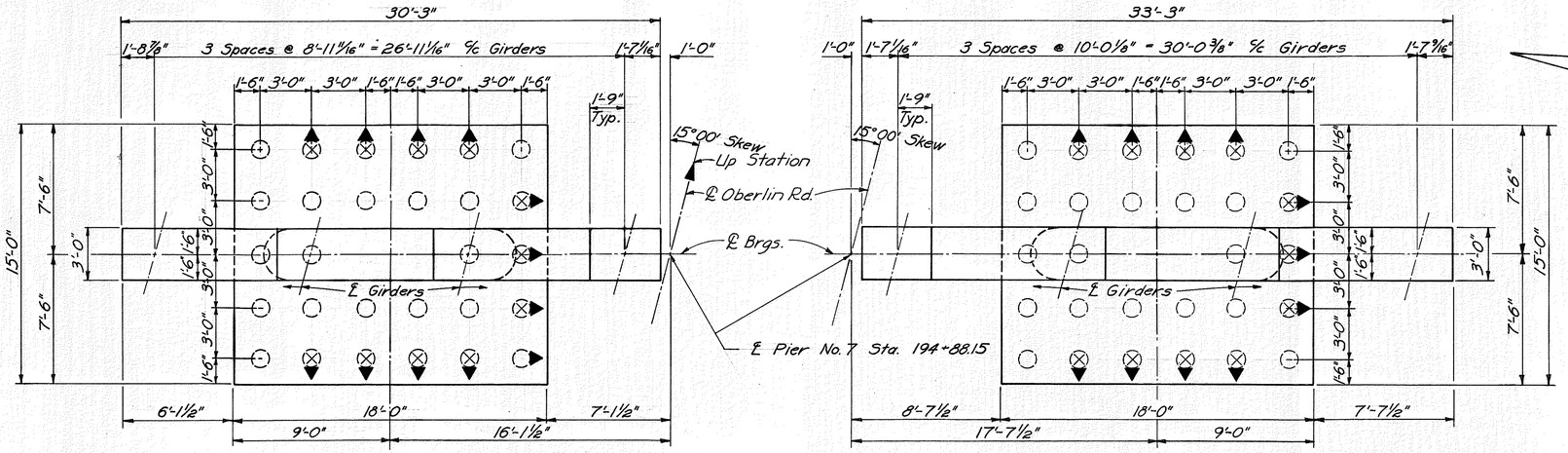

PLAN W.B.L.

PIER PLAN

PLAN E.B.L.

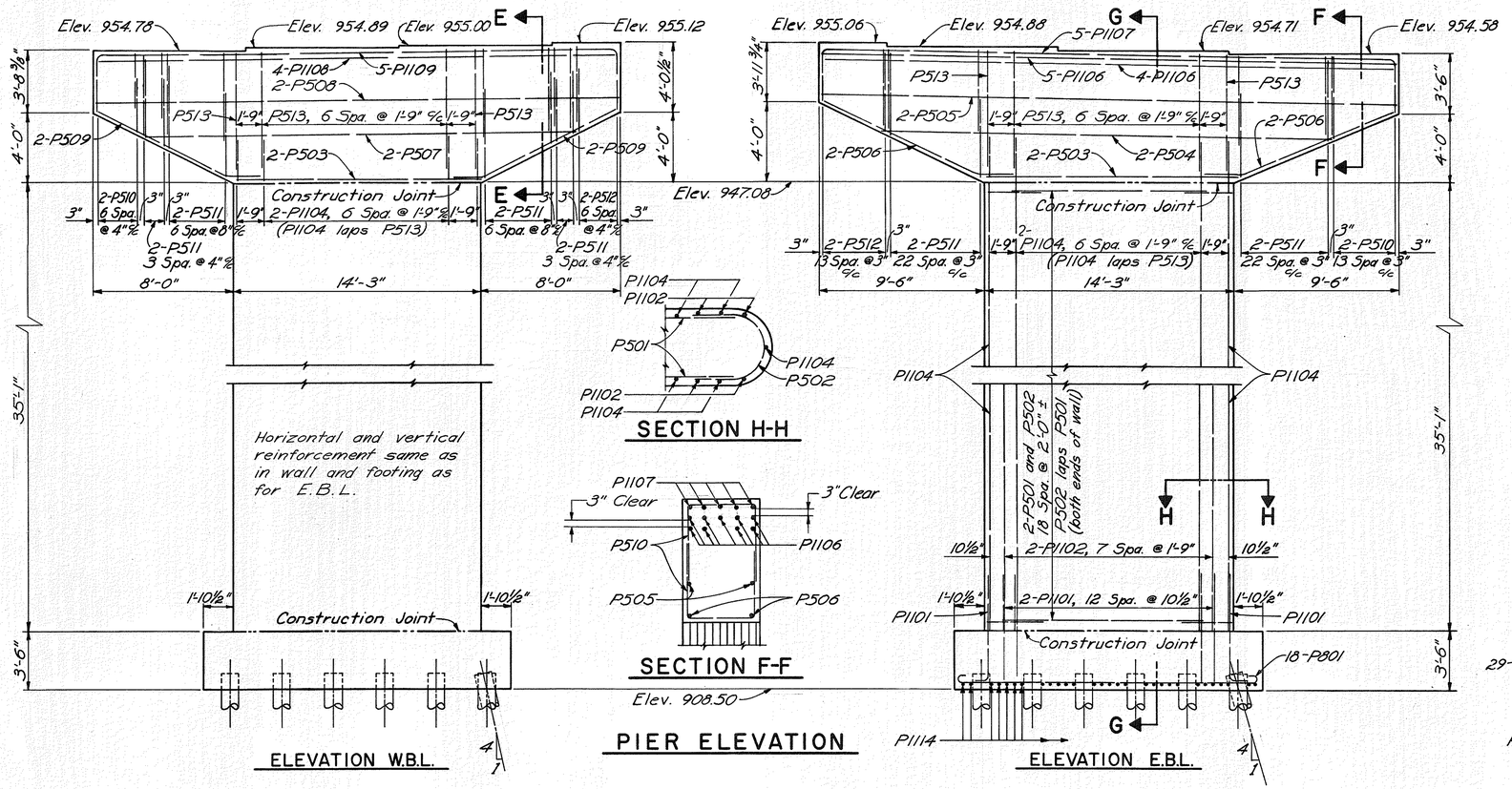

PILE LEGEND

- Vertical Pile
- Battered Pile 1:4 (and direction of batter)

Note: "BRIDGE SEAT REINFORCING"; See note on sheet 39.

For additional notes see
Pier Details, Sheets No. 38 and 39
Piling shall be 12"ϕ Cast-in-place
Reinforced concrete.

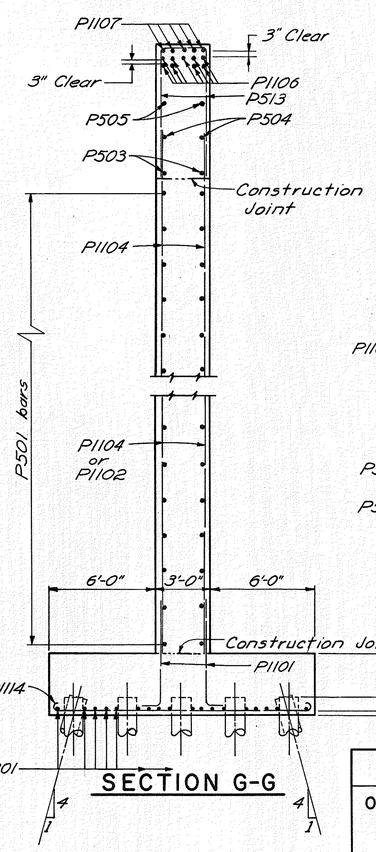

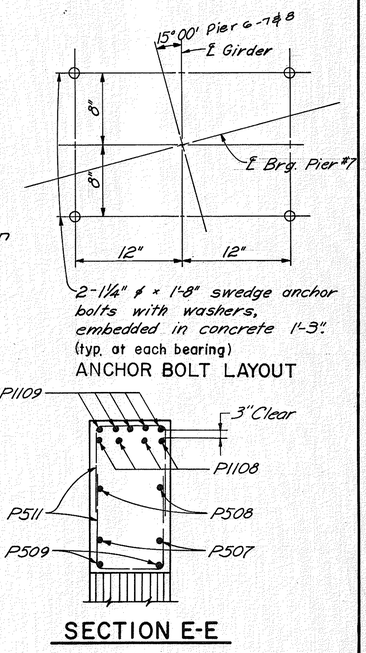

LEGEND:
E.B.L. designates East Bound Lane
W.B.L. designates West Bound Lane

STARK COUNTY, OHIO 13/24

OBERLIN ROAD VIADUCT (Relocated)

PIER DETAILS
PIER NO. 7

STA. 189+14.87 to STA. 196+45.48

DESIGNED	DRAWN	TRACED	CHECKED	REVIEWED	REVISED
NN	AJM		MK		

E. S. PRESTON & ASSOCIATES, LTD.

FED. RD. DIVISION	STATE	PROJECT	
2	OHIO	SU1509(I)	

STARK COUNTY ROAD 374

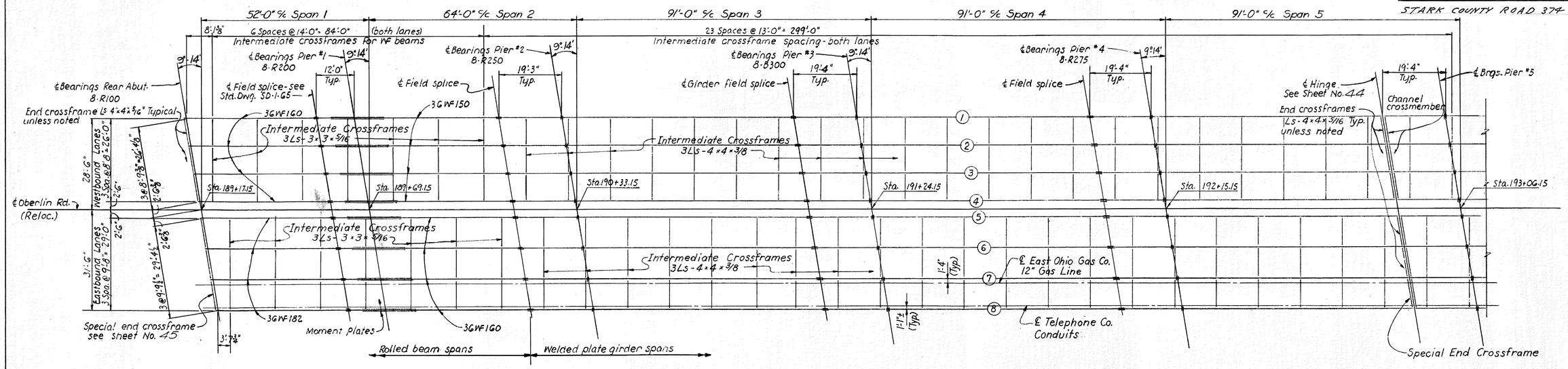

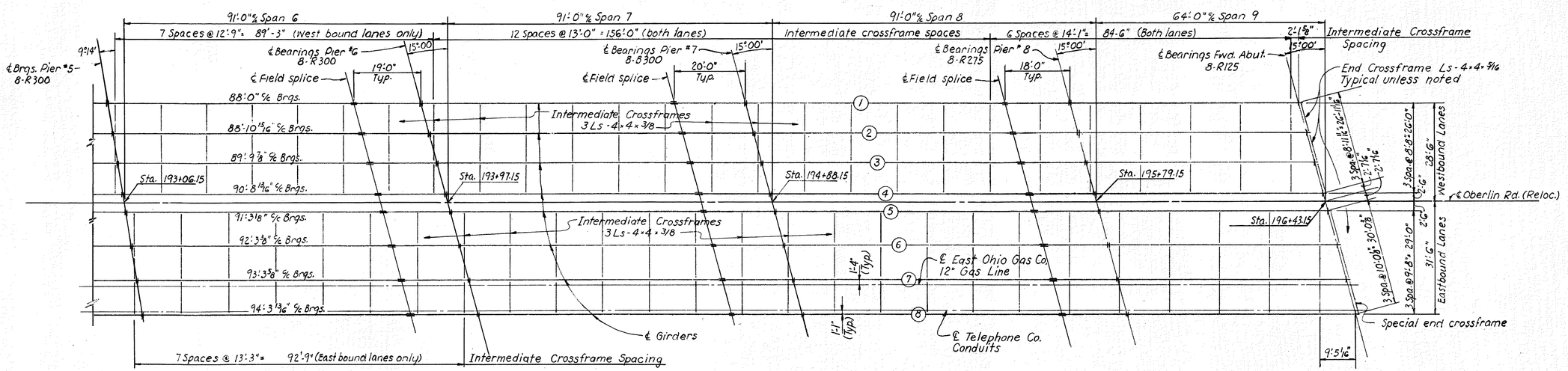

STEEL FRAMING PLAN

NOTES:

Refer to Standard Drawing SD-1-65 (Sh. 1 of 3) for typical end crossframes.
Refer to sh. 45 for field splice details.
Refer to Standard Drawing RB-1-55 for rocker and bolster details.

Refer to sh. 44 for hinge details, and channel crossmembers at the hinge.

See sh. 48 for intermediate crossframe details.

See sh. 45 for special end crossframe details.

14/24

STARK COUNTY, OHIO

OBERLIN ROAD VIADUCT (Relocated)

STEEL FRAMING PLAN

STA. 189+14.87 to STA. 196+45.48

DESIGNED	DRAWN BY	TRACED BY	CHECKED BY	REVIEWED	REVISED
A.S.B.	J.R.	J.R.	M.K.		

E.S. PRESTON & ASSOCIATES, LTD.

FED. RD. DIVISION	STATE	PROJECT	
2	OHIO	SU 1509(1)	

43/57

STARK COUNTY ROAD 374

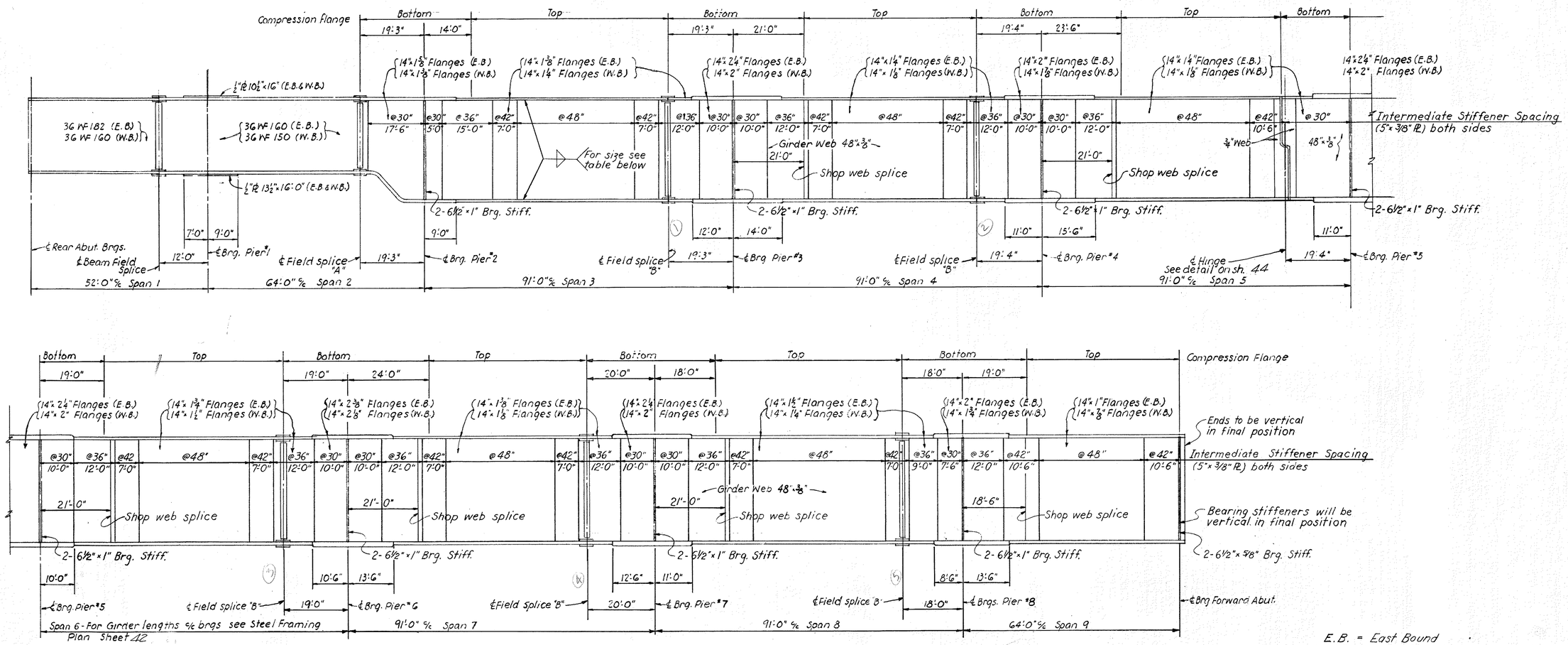

GIRDER ELEVATION

E.B. = East Bound
W.B. = West Bound

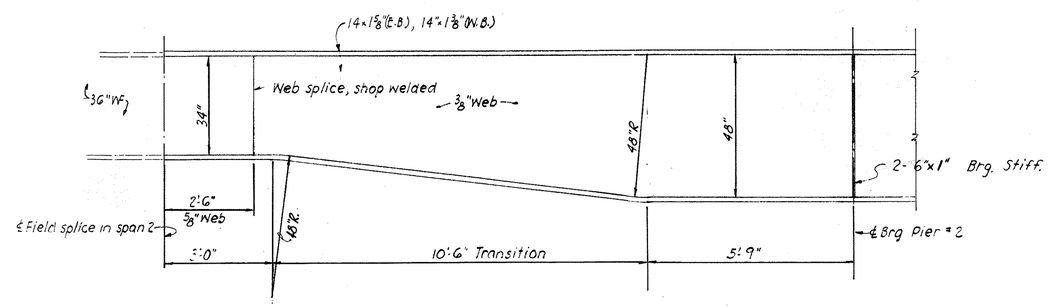

DETAIL OF TRANSITION

REFER TO Sh. 44 for intermediate and bearing stiffener details.
REFER TO Std. Dwg. SD-1-65 for: Field splice in span 1, welding of Moment plates over Pier 1
REFER TO Sh. 42 for steel Framing Plan, and to Sh. 44 for hinge details, welding details and Girder splice details.
LEGEND: E.B. denotes Eastbound Lanes, W.B. Westbound Lanes.
The Contractor shall be required to submit to the Director, for approval, 3 prints showing his proposed erection procedure for the plate girders.

TABLE OF FILLET WELD SIZES	
PLATE THICKNESS	WELD SIZE
Up to ¾"	5/16"
Over ¾" to 1½"	5/16"
Over 1½" to 2¼"	⅜"
Over 2¼" to 6"	½"

PLATE THICKNESS refers to the thickness of the thicker part joined.

STARK COUNTY, OHIO 15/24

OBERLIN ROAD VIADUCT (Relocated)

SUPERSTRUCTURE DETAILS

STA. 189+14.87 to STA. 196+45.48

DESIGNED	DRAWN BY	TRACED BY	CHECKED BY	REVIEWED	REVISED
A.S.B.	J.R.	J.R.	M.K.		

E. S. PRESTON & ASSOCIATES, LTD.

FED. RD. DIVISION	STATE	PROJECT	
2	OHIO	SU 1509(I)	

44/57

STARK COUNTY ROAD 374

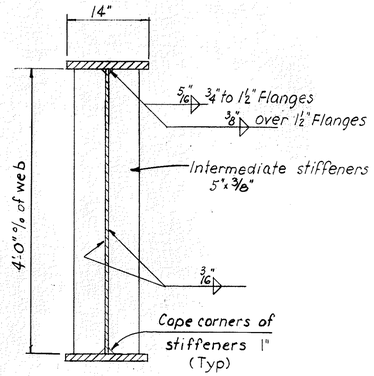

TYPICAL SECTION

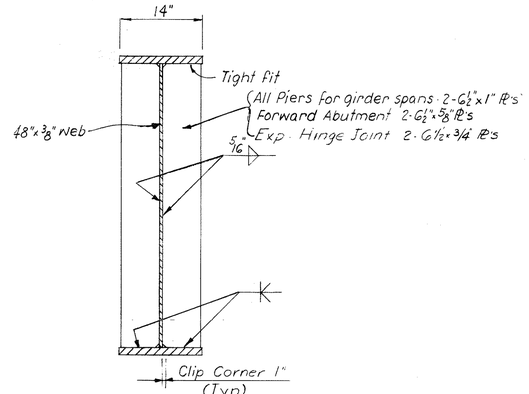

BEARING STIFFENERS

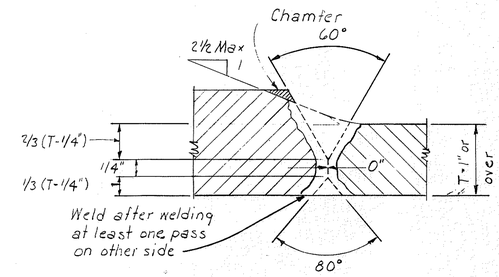

DETAIL "A"

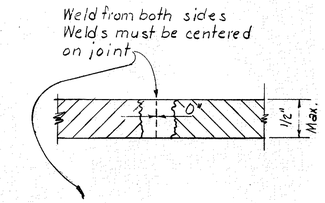

DETAIL "C"

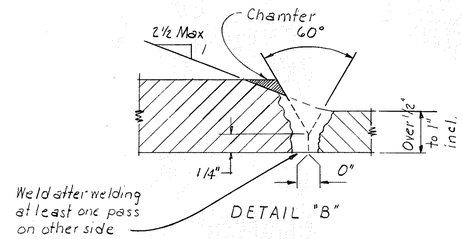

DETAIL "B"

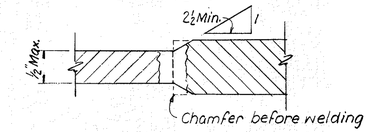

DETAIL "D"

WELDED JOINTS

Automatic Submerged Arc Process

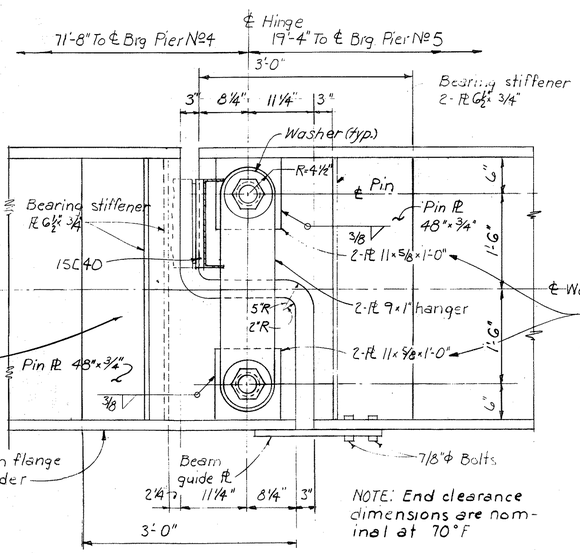

EXPANSION HINGE DETAIL

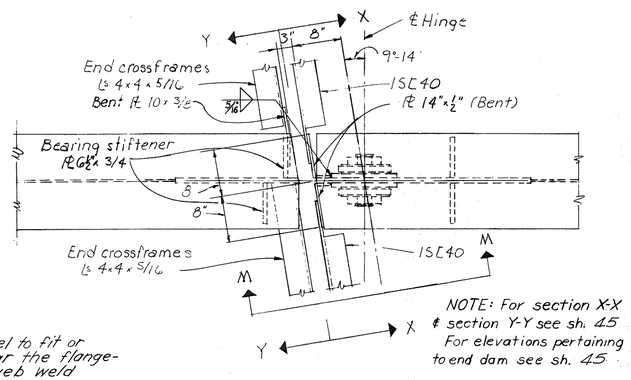

HINGE PLAN

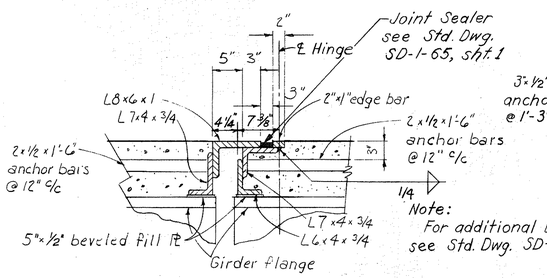

SECTION M-M END DAM DETAIL AT HINGE

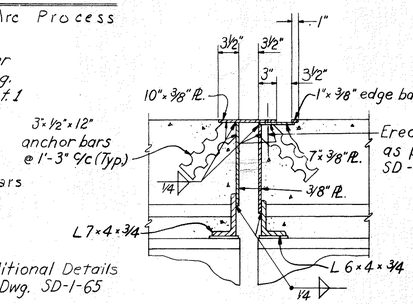

SIDEWALK END DAM DETAIL AT HINGE

For additional End Dam Details for sidewalk, curb, & median see sheet 45

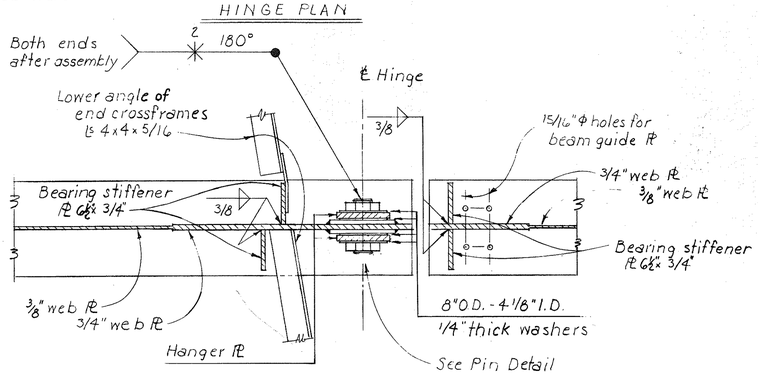

SECTION A-A

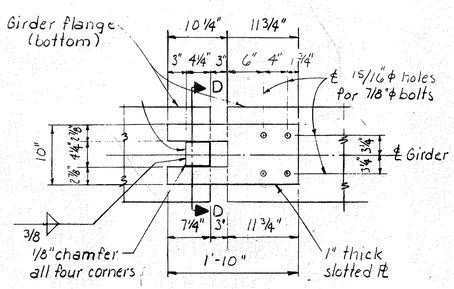

BEAM GUIDE DEVICE DETAIL

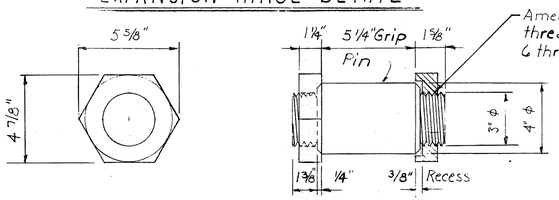

HANGER PIN AND NUT DETAIL

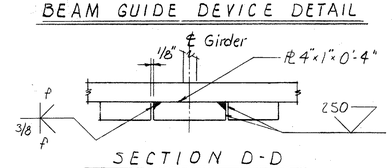

SECTION D-D

STARK COUNTY, OHIO 16/24

OBERLIN ROAD VIADUCT (Relocated)

SUPERSTRUCTURE DETAILS

STA. 189+14.87 to STA. 196+45.48

DESIGNED	DRAWN BY	TRACED BY	CHECKED BY	REVIEWED	REVISED
A.S.B.	J.R.	J.R.	N.E.N.		

E. S. PRESTON & ASSOCIATES, LTD

FED. RD. DIVISION	STATE	PROJECT	
2	OHIO	SU 1509(1)	

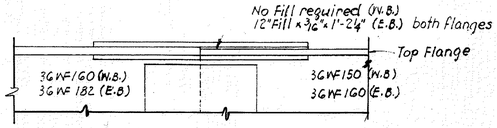

BEAM FLANGE SPLICE DETAIL

For additional details and web splice see Std. Dwg. SD-1-65

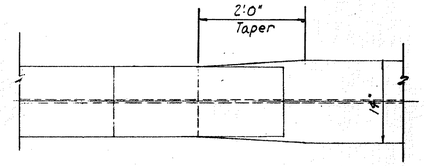

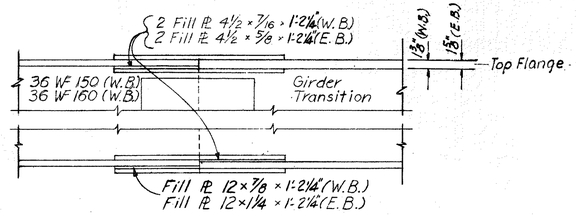

WF BEAM TO GIRDER SPLICE

For flange splice details, see view A-A (Type A) Std. Dwg. SD-1-65 sheet 3 of 3, for web splice details, see type A splice for 36WF 160 & Type B splice for 36WF 150.

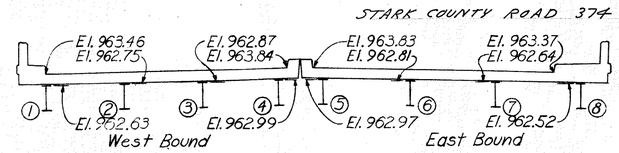

ELEVATIONS FOR END DAM AT HINGE

NOTE: Elevations given at each girder are at top of flange

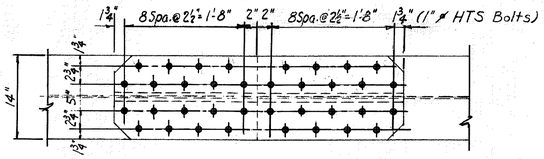

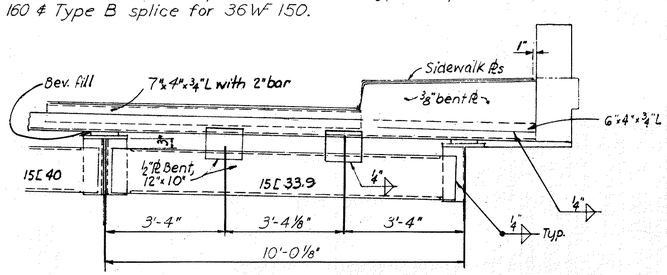

SECTION X-X

(Showing treatment at sidewalk at hinge)
(See sh. 44 for location)

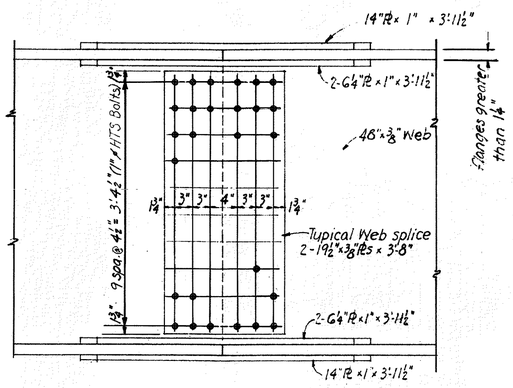

TYPICAL GIRDER FIELD SPLICE

For flange thickness greater than 1¼"

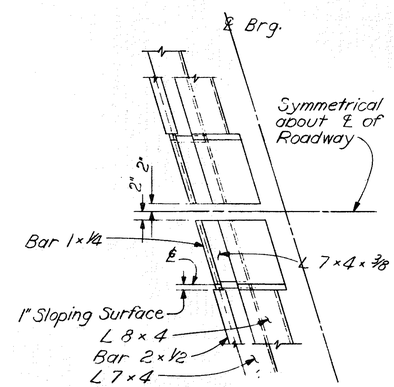

PLAN (Median)

NOTE:

For end dam anchors ⅜" bent form Pl., and all other details, see Std. Dwg. SD-1-65 sheet 2 of 3.

For median, curb, and sidewalk dimensions and details, see Superstructure Details, sheet 48

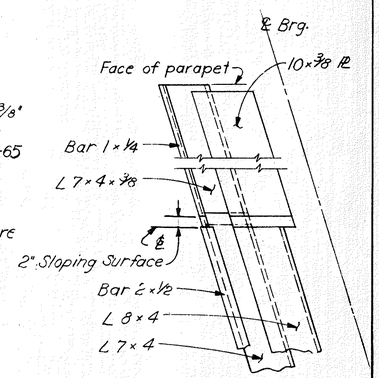

PLAN OF CURB & SIDEWALK

Curb as shown; sidewalk opp. hand.

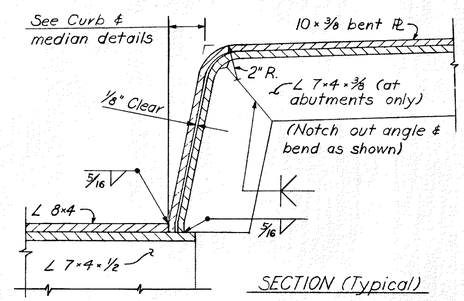

SECTION (Typical)

END DAM DETAILS AT SIDEWALK, CURB, & MEDIAN

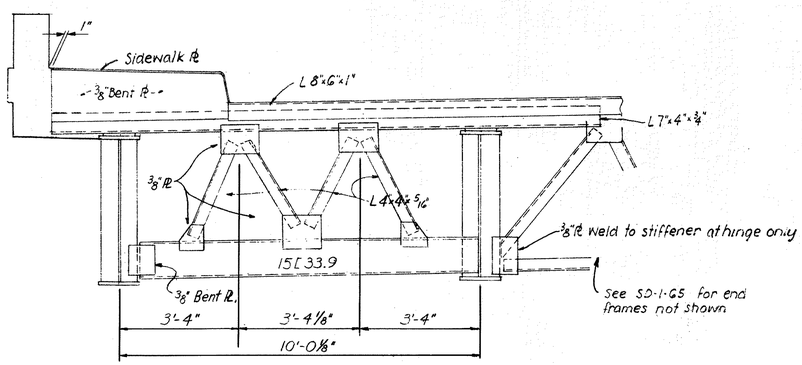

SECTION Y-Y (see sh. 48 for location)

Showing special crossframe under sidewalk at hinge
See Std. Dwg. SD-1-65 for details not shown.

Note: End crossframes at both abutments are as shown on Std. Dwg. SD-1-65 except that angles near girder or beam under sidewalk must be adjusted to allow passage of gas line and telephone conduits. For details see sheet 46

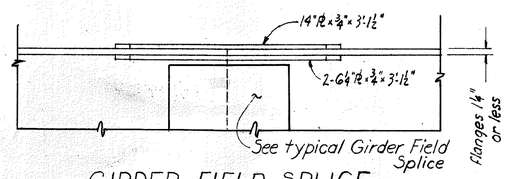

GIRDER FIELD SPLICE FOR FLANGES ¼" AND LESS

NOTE: Use 1" ø high strength bolts for all field splices.

STARK COUNTY, OHIO 17/24

OBERLIN ROAD VIADUCT (Relocated)

SUPERSTRUCTURE DETAILS

STA. 189+14.87 to STA. 196+45.48

DESIGNED	DRAWN BY	TRACED BY	CHECKED BY	REVIEWED	REVISED
A.S.B	J.R.	J.R.	N.E.N.		

E. S. PRESTON & ASSOCIATES, LTD.

FED. RD. DIVISION	STATE	PROJECT	
2	OHIO	SU 1509 (1)	

46/57

STARK COUNTY ROAD 374

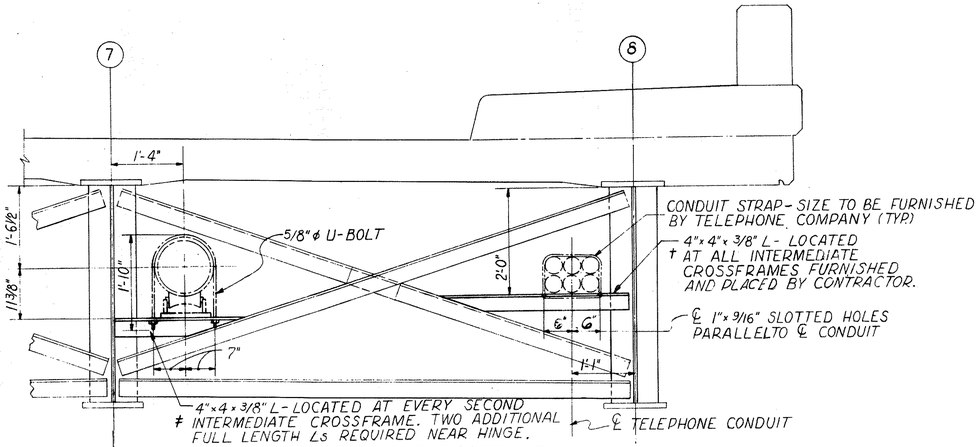

INTERMEDIATE CROSSFRAME

TYPICAL SECTION THRU INTERMEDIATE CROSSFRAMES AT GIRDERS SHOWING METHOD OF SUPPORTING GAS LINE AND TELEPHONE CONDUIT.

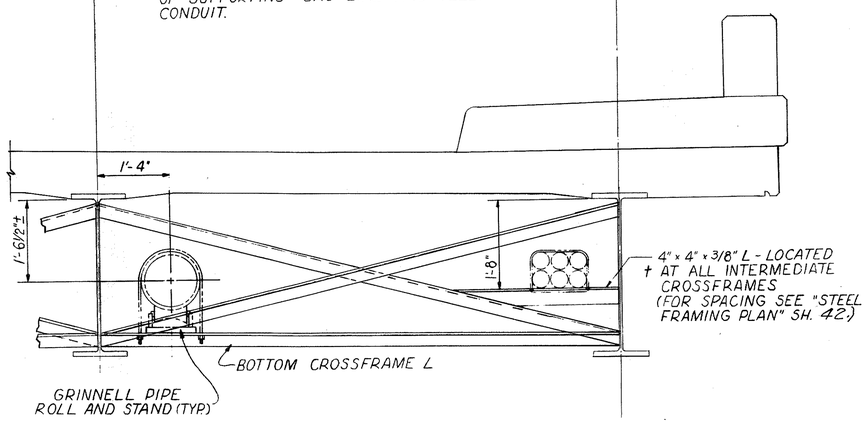

INTERMEDIATE CROSSFRAME

TYPICAL SECTION THRU INTERMEDIATE CROSSFRAMES AT 36 WF'S SHOWING METHOD OF SUPPORTING GAS LINE AND TELEPHONE CONDUIT.

NOTES:

† CHARGEABLE TO OHIO BELL TELEPHONE COMPANY.

‡ CHARGEABLE TO THE EAST OHIO GAS COMPANY.

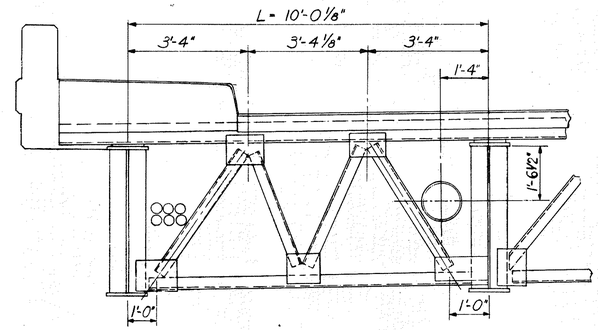

END CROSSFRAME AT FORWARD ABUTMENT

(LOOKING WEST)

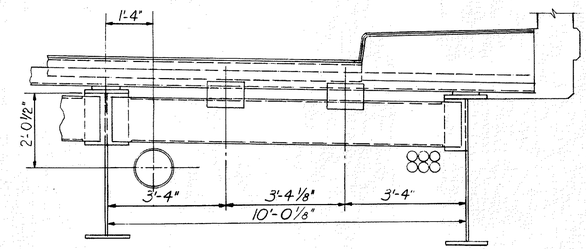

CHANNEL CROSSMEMBER AT HINGE

(LOOKING EAST)

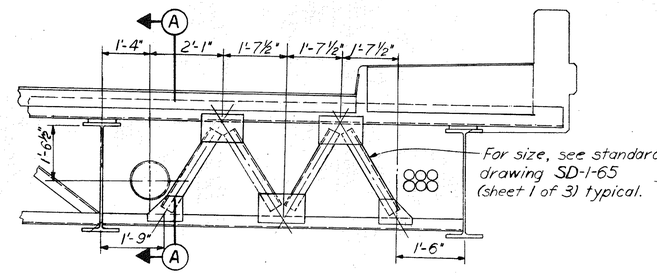

END CROSSFRAME AT REAR ABUTMENT

(LOOKING EAST)

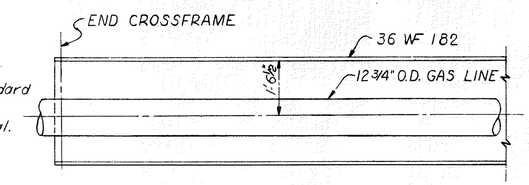

SECTION A-A

THIS SECTION IS SHOWN WITH END CROSSFRAME, END DAM STEEL AND CONCRETE REMOVED.

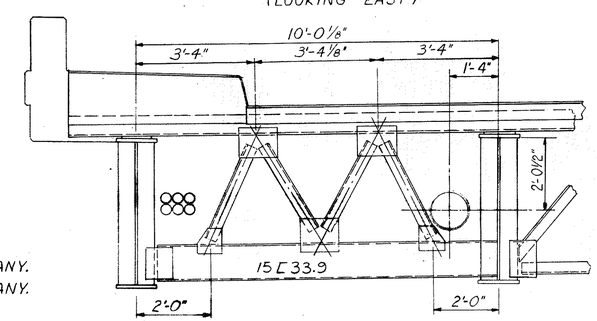

END CROSSFRAME AT HINGE

(LOOKING WEST)

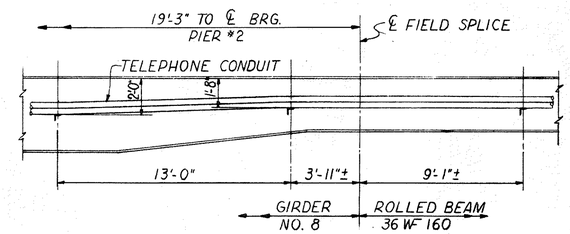

SECTION AT FIELD SPLICE NEAR PIER #2

(LOOKING SOUTH)

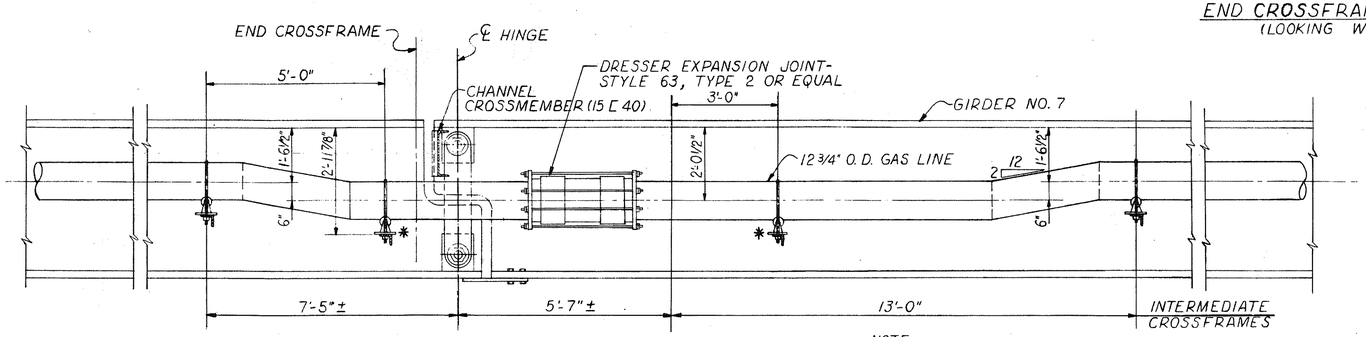

* INDICATES PIPE SUPPORT ANGLES WHICH EXTEND FULL LENGTH BETWEEN GIRDERS 7 & 8.

SECTION AT HINGED JOINT

(LOOKING NORTH)

NOTE:

GAS LINE MUST BE LOWERED IN THIS AREA AS SHOWN TO CLEAR CHANNEL CROSSMEMBER.

STARK COUNTY, OHIO

18/24

OBERLIN ROAD VIADUCT (Relocated)

SUPERSTRUCTURE DETAILS

STA. 189+14.87 to STA 196+45.48

DESIGNED	DRAWN BY	TRACED BY	CHECKED BY	REVIEWED	REVISED
	A.J.M.	A.J.M	M.K.		

E. S. PRESTON & ASSOCIATES, LTD.

FED. RD. DIVISION	STATE	PROJECT	
2	OHIO	SU 1509(1)	

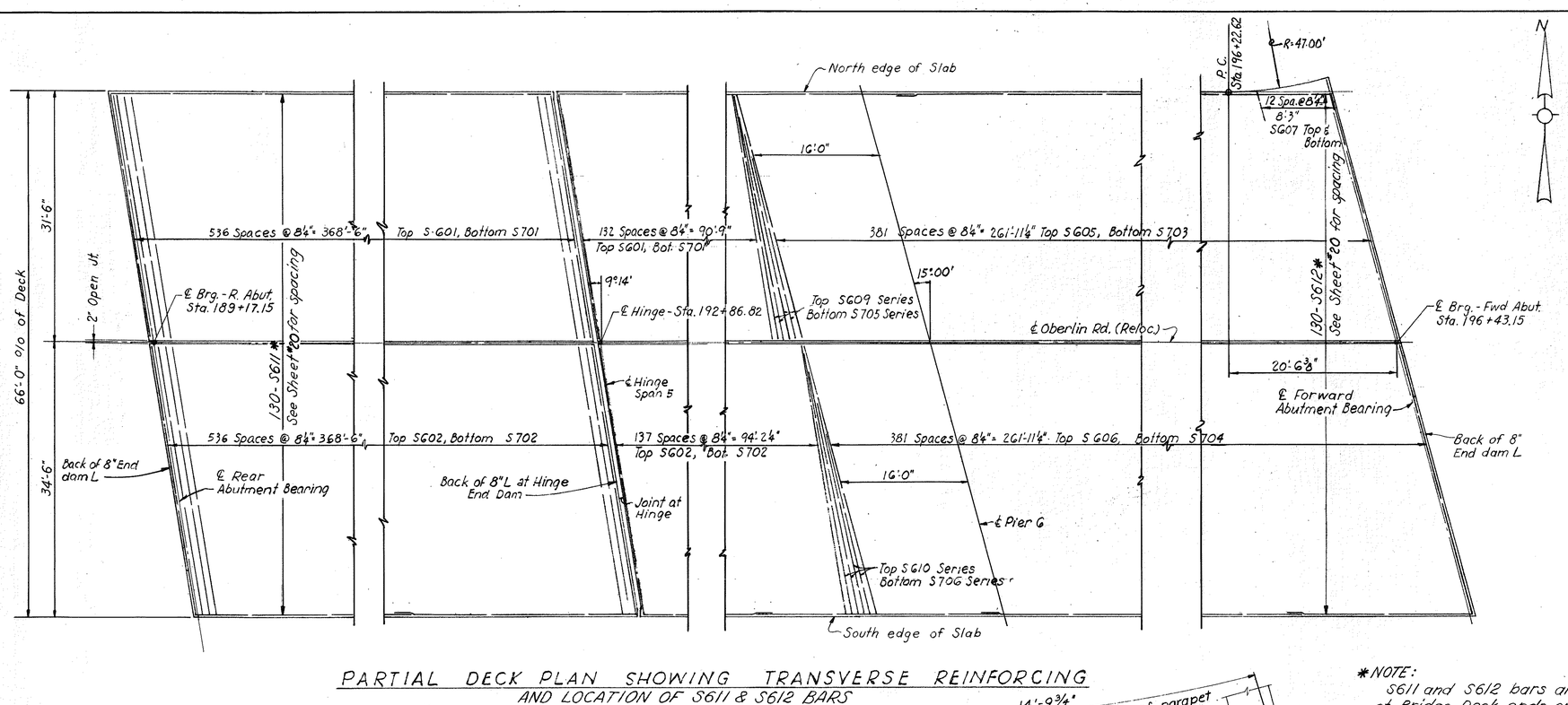

PARTIAL DECK PLAN SHOWING TRANSVERSE REINFORCING AND LOCATION OF S611 & S612 BARS

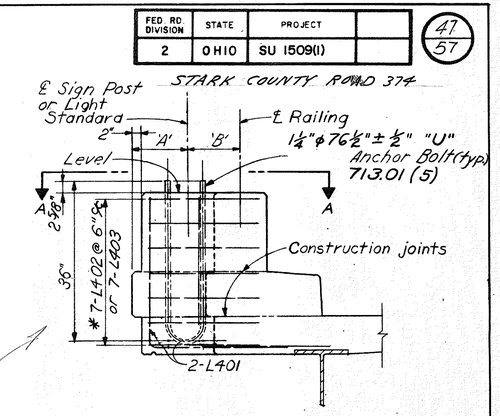

SECTION THRU CURB AT LIGHT STANDARD OR SIGN POST

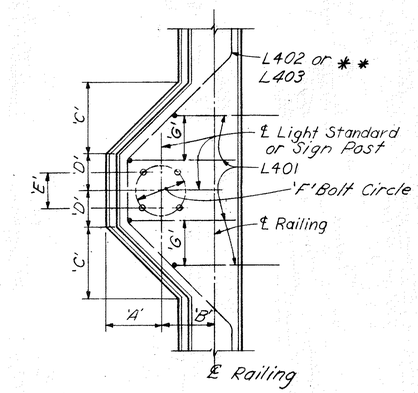

SECTION A-A

*NOTE:
S611 and S612 bars are located at Bridge Deck ends only. See Sh. 48 for additional details.

NOTES:
1. For location of light standards see sheets 31 and 32
2. For location of sign see sheet 32

PILASTER	DIMENSION								BAR
	'A'	'B'	'C'	'D'	'E'	'F'	'G'	'H'	**
Light Standard	1'-0"	11"	1'-3"	7½"	7¾"	11"	8"	1"φ	L402
Sign	1'-2⅝"	1'-1½"	1'-8"	10"	11 5/16"	16"	10"	1¾"φ	L403

PARTIAL DECK PLAN SHOWING TRANSVERSE REINFORCING AND LOCATION OF S611 & S612 BARS

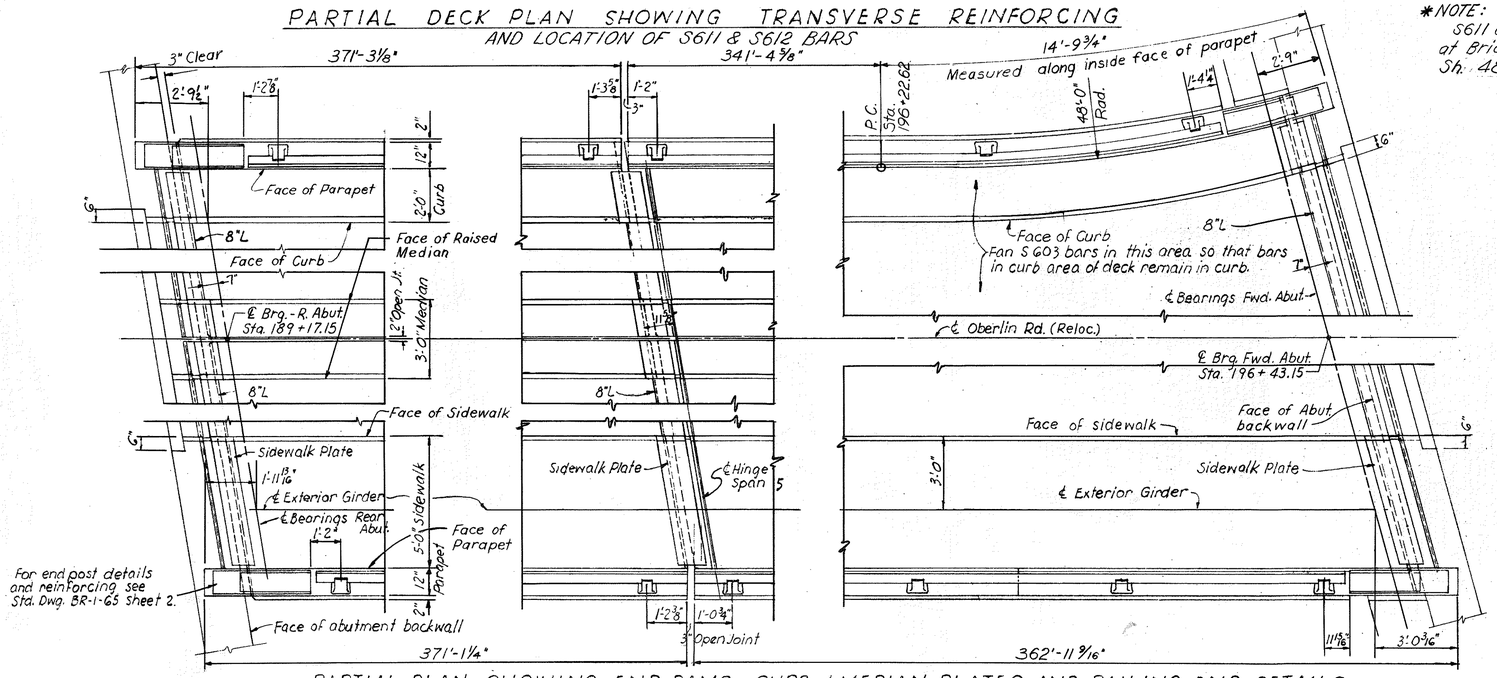

PARTIAL PLAN SHOWING END DAMS, CURB & MEDIAN PLATES, AND RAILING END DETAILS

For Railing end post details and reinforcing steel see Standard Drawing BR-1-65 Sheet 2. For end dam details at abutments see Standard Drawing SD-1-65, modify curb plates as shown on 45. For end dam at hinge in span 5 see sheet 44.

STARK COUNTY, OHIO

OBERLIN ROAD VIADUCT (Relocated)

SUPERSTRUCTURE DETAILS

STA. 189+14.87 to 196+45.48

DESIGNED	DRAWN BY	TRACED BY	CHECKED BY	REVIEWED	REVISED
	J.R.	J.R.	M.K.		

E. S. PRESTON & ASSOCIATES, LTD.

FED. RD. DIVISION	STATE	PROJECT	
2	OHIO	SU1509(1)	

STARK COUNTY ROAD 374

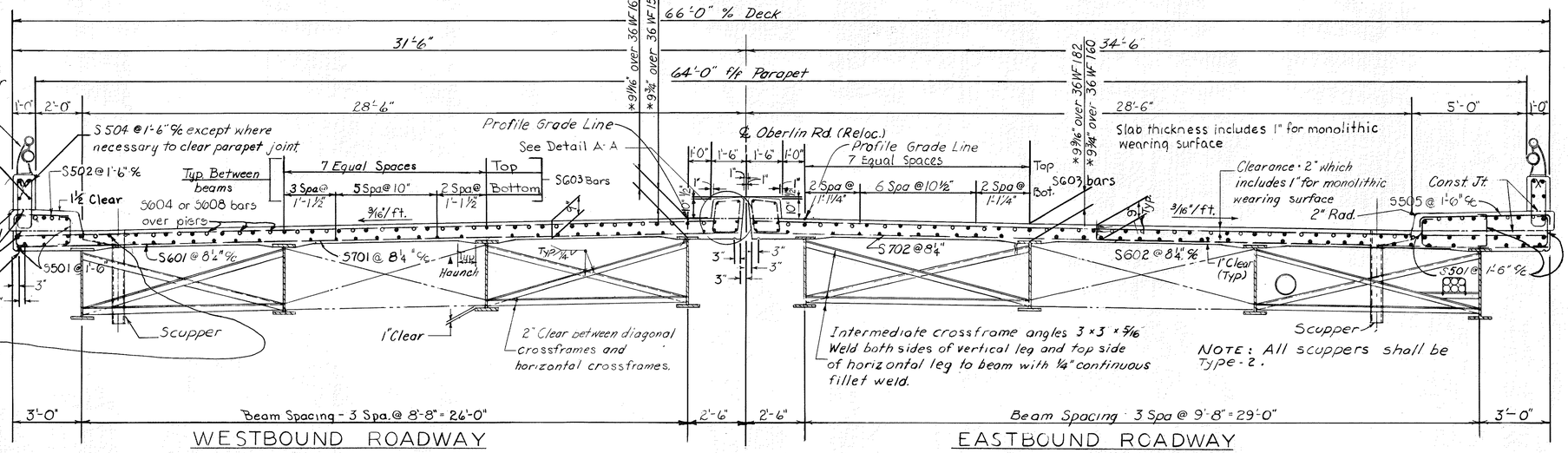

WESTBOUND ROADWAY

EASTBOUND ROADWAY

TRANSVERSE SECTION

BEAM SPAN (LOOKING EAST)

LONGITUDINAL STEEL:
All longitudinal bars to be S603, except at beginning and end of Bridge Deck, unless otherwise shown. At beginning of Bridge Deck, Span 1, S611 bars will be used in place of S603 bars. At end of Bridge Deck, Span 9, S612 bars will be used in place of S603 bars. Lap S603, S611 and S612 bars 1'-11" minimum.

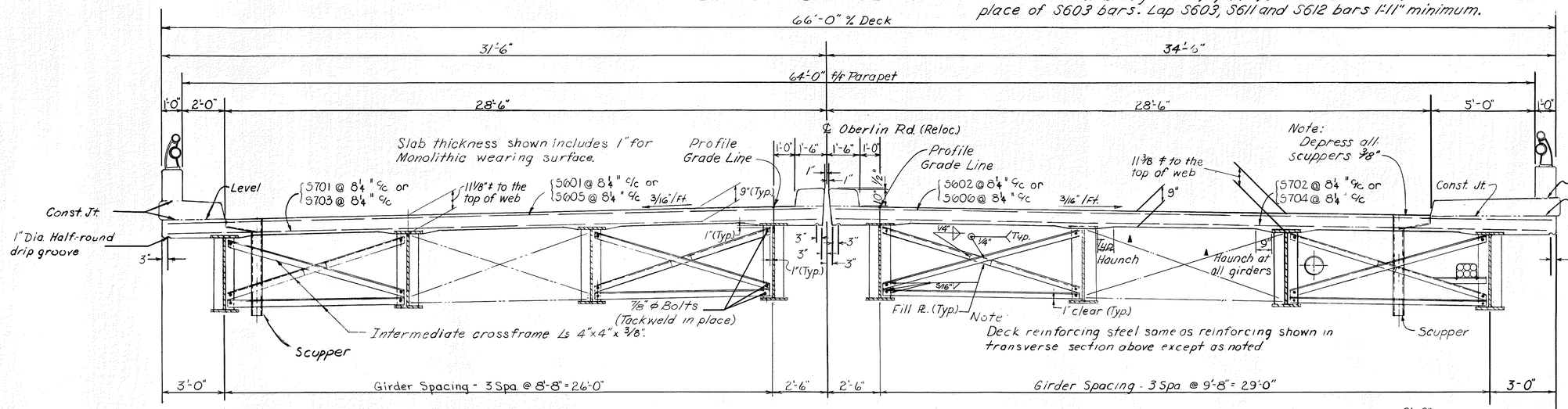

TRANSVERSE SECTION

GIRDER SPAN (LOOKING EAST)

Notes:

* The distance shown from top of deck slab to top of steel beam is the nominal dimension. The quantity of deck concrete to be paid for shall be based on this dimension even though deviations from it may be necessary because the top flange of the beam may not have the exact camber of conformation required to place it parallel to the finished grade.

* This is the nominal dimension. The quantity of deck concrete to be paid for shall be based on this dimension even though deviation from it may be necessary because top flange of girder may not have the exact camber or conformation required to place it parallel to the finished grade. Deduction shall be made for volume of encased steel plates as per section 511-19 of the Construction and Material Specifications.

▲ A typical haunch width of 9" shall be used for computing quantity of concrete. However the haunch width may vary between 6" and 12" provided that the slope shall be not more than 1:4 for a haunch less than 9" in width.

All Superstructure concrete shall be class "C" concrete.

For additional deck reinforcing details see sheet 47.

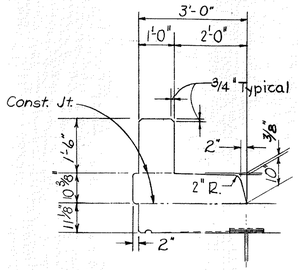

NOTE: Reinforcing steel & Railing not shown.

CURB, PARAPET & FASCIA DETAILS

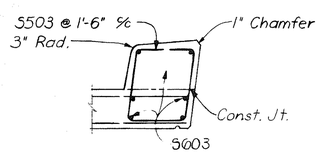

DETAIL A-A

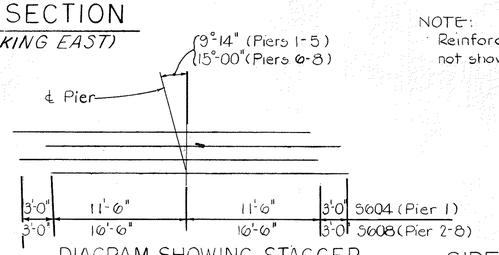

DIAGRAM SHOWING STAGGER S604 & S608 BARS OVER PIERS

NOTE: Reinforcing steel & Railing not shown

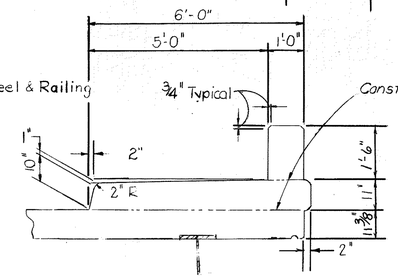

SIDEWALK, PARAPET & FASCIA DETAILS

STARK COUNTY, OHIO 20/24

OBERLIN ROAD VIADUCT (Relocated)

SUPERSTRUCTURE DETAILS

STA. 189+14.87 to STA. 196+45.48

DESIGNED	DRAWN BY	TRACED BY	CHECKED BY	REVIEWED	REVISED
	W.M.	W.M.	M.K.		

E. S. PRESTON & ASSOCIATES, LTD.

STARK COUNTY ROAD 374

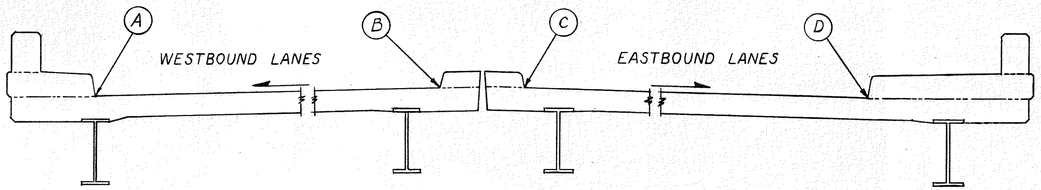

Looking Forward on Stationing

DECK CONSTRUCTION CONTROL ELEVATIONS

LOCATION	Rear Abut. ℄	Span No. 1 = L_1 .25 L_1	.50 L_1	.75 L_3	1st Pier ℄	Span No. 2 = L_2 .25 L_2	.50 L_2	.75 L_2	2nd Pier ℄	Span No. 3 = L_3 .25 L_3	.50 L_3	.75 L_3	3rd Pier ℄	Span No. 4 = L_4 .25 L_4	.50 L_4	.75 L_4	4th Pier ℄	Span No. 5 = L_5 .25 L_5	.50 L_5	.75 L_5	5th Pier ℄	Span No. 6 = L_6 .25 L_6	.50 L_6	.75 L_6	6th Pier ℄	Span No. 7 = L_7 .25 L_7	.50 L_7	.75 L_7	7th Pier ℄	Span No. 8 = L_8 .25 L_8	.50 L_8	.75 L_8	8th Pier ℄	Span No. 9 = L_9 .25 L_9	.50 L_9	.75 L_9	Fwd. Abut. ℄
Station A	189+12.52	189+25.52	189+38.52	189+51.52	189+64.52	189+80.52	189+96.52	190+12.52	190+28.52	190+51.27	190+74.02	190+96.77	191+19.52	191+42.27	191+65.02	191+87.77	192+10.52	192+33.27	192+56.02	192+78.77	193+01.52	193+23.52	193+45.52	193+67.52	193+89.51	194+12.26	194+35.01	194+57.76	194+80.51	195+03.26	195+26.01	195+48.76	195+71.51	195+87.51	196+03.51	196+19.51	196+35.09
Constr. Elev. A	967.16	967.06	966.94	966.79	966.64	966.48	966.32	966.15	966.00	965.80	965.59	965.34	965.09	964.88	964.67	964.43	964.18	963.97	963.76	963.50	963.27	963.06	962.86	962.63	962.39	962.18	961.97	961.73	961.48	961.28	961.07	960.82	960.57	960.41	960.27	960.11	959.91
Station B	189+16.91	189+29.91	189+42.91	189+55.91	189+68.91	189+84.91	190+00.91	190+16.91	190+32.91	190+55.66	190+78.41	191+01.16	191+23.91	191+46.66	191+69.41	191+92.16	192+14.91	192+37.66	192+60.41	192+83.16	193+05.91	193+28.62	193+51.33	193+74.04	193+96.75	194+19.50	194+42.25	194+65.00	194+87.75	195+10.50	195+33.25	195+56.00	195+78.75	195+94.75	196+10.75	196+26.75	196+42.75
Constr. Elev. B	967.54	967.43	967.31	967.17	967.02	966.86	966.70	966.53	966.38	966.17	965.95	965.71	965.47	965.26	965.04	964.80	964.56	964.34	964.13	963.87	963.65	963.44	963.22	962.98	962.74	962.53	962.31	962.07	961.83	961.62	961.40	961.17	960.92	960.76	960.61	960.45	960.28
Station C	189+17.39	189+30.39	189+43.39	189+56.39	189+69.39	189+85.39	190+01.39	190+17.39	190+33.39	190+56.14	190+78.89	191+01.64	191+24.39	191+47.14	191+69.89	191+92.64	192+15.39	192+38.14	192+60.89	192+83.64	193+06.39	193+29.18	193+51.97	193+74.76	193+97.55	194+20.30	194+43.05	194+65.80	194+88.55	195+11.30	195+34.05	195+56.80	195+79.55	195+95.55	196+11.55	196+27.55	196+43.55
Constr. Elev. C	967.53	967.43	967.31	967.16	967.01	966.85	966.69	966.53	966.37	966.17	965.95	965.70	965.46	965.25	965.04	964.80	964.55	964.34	964.12	963.87	963.64	963.43	963.21	962.97	962.73	962.52	962.30	962.06	961.82	961.61	961.40	961.16	960.91	960.76	960.61	960.45	960.27
Station D	189+21.78	189+34.78	189+47.78	189+60.78	189+73.78	189+89.78	190+05.78	190+21.78	190+37.78	190+60.53	190+83.28	191+06.03	191+28.78	191+51.53	191+74.28	191+97.03	192+19.78	192+42.53	192+65.28	192+88.03	193+10.78	193+34.28	193+57.79	193+81.29	194+04.79	194+27.54	194+50.29	194+73.04	194+95.79	195+18.54	195+41.29	195+64.04	195+86.79	196+02.79	196+18.79	196+34.79	196+50.79
Constr. Elev. D	967.07	966.97	966.85	966.70	966.55	966.39	966.23	966.06	965.91	965.71	965.49	965.25	965.00	964.79	964.58	964.34	964.09	963.88	963.66	963.41	963.18	962.96	962.74	962.49	962.24	962.03	961.82	961.58	961.33	961.12	960.91	960.67	960.42	960.26	960.12	959.95	959.78

Elevations shown are those which are required before the concrete deck is placed.
Allowance for the dead load deflections caused by the weight of the concrete has been made.

DEFLECTION AND CAMBER TABLE

*GIRDER Nº	Location	Span No. 1 = L_1 .25 L_1 (A)	.50 L_1 (B)	.75 L_1 (C)	Span No. 2 = L_2 .25 L_2 (D)	.50 L_2 (E)	.70 L_2 (F)	Span No. 3 = L_3 .25 L_3 (G)	.50 L_3 (H)	.80 L_3 (I)	Span No. 4 = L_4 .25 L_4 (J)	.50 L_4 (K)	.80 L_4 (L)	Span No. 5 = L_5 .25 L_5 (M)	.50 L_5 (N)	.80 L_5 (O)	Span No. 6 = L_6 .25 L_6 (P)	.50 L_6 (Q)	.80 L_6 (R)	Span No. 7 = L_7 .25 L_7 (S)	.50 L_7 (T)	.80 L_7 (U)	Span No. 8 = L_8 .25 L_8 (V)	.50 L_8 (W)	.80 L_8 (X)	Span No. 9 = L_9 .25 L_9 (Y)	.50 L_9 (Z)	.75 L_9 (Δ)
1, 2 & 3	Deflection due to wt. of steel	1/16"	1/16"	0	0	0	0	1/16"	1/16"	0	0	1/16"	0	0	1/16"	0	0	1/16"	0	0	1/16"	0	1/16"	1/8"	1/16"	0	0	0
	Deflection due to remaining D.L.	3/8"	1/2"	1/4"	0	0	-1/8"	5/16"	1/2"	1/4"	1/4"	7/16"	1/4"	1/4"	3/8"	0	3/16"	3/8"	1/4"	1/4"	7/16"	1/4"	5/16"	1/2"	5/16"	1/16"	1/4"	3/16"
	Required shop camber	7/16	9/16	1/4"	0	0	-1/8"	3/8"	9/16"	1/4"	1/4"	1/2"	1/4"	1/4"	7/16"	0	3/16"	7/16"	1/4"	1/4"	7/16"	1/4"	3/8"	5/8"	3/8"	1/16"	1/4"	3/16"
4	Deflection due to wt. of steel	1/16"	1/16"	0	0	0	0	1/16"	1/16"	0	0	1/16"	0	0	1/16"	0	0	1/16"	0	0	1/16"	0	1/16"	1/8"	1/16"	0	0	0
	Deflection due to remaining D.L.	5/16	7/16"	1/4"	0	0	-1/16"	1/4"	3/8"	3/16"	3/16"	3/8"	3/16"	3/16"	5/16"	0	3/16"	5/16"	3/16"	3/16"	5/16"	3/16"	1/4"	3/8"	1/4"	1/16"	3/16"	3/16"
	Required shop camber	3/8	1/2	1/4"	0	0	-1/16"	5/16"	7/16"	3/16"	3/16"	7/16"	3/16"	3/16"	3/8"	0	3/16"	3/8"	3/16"	3/16"	3/8"	3/16"	5/16"	1/2"	5/16"	1/16"	3/16"	3/16"
5	Deflection due to wt. of steel	1/16"	1/16"	0	0	0	0	1/16"	1/16"	0	0	1/16"	0	0	1/16"	0	0	1/16"	0	0	1/16"	0	1/16"	1/8"	1/16"	0	0	0
	Deflection due to remaining D.L.	5/16"	3/8"	3/16"	0	0	-1/16"	1/4"	3/8"	3/16"	3/16"	3/8"	3/16"	3/16"	5/16"	0	3/16"	5/16"	3/16	3/16"	5/16"	3/16"	1/4"	3/8"	1/4"	1/16"	3/16"	1/8"
	Required shop camber	3/8"	7/16"	1/4"	0	0	-1/16"	5/16"	7/16"	3/16"	3/16"	7/16"	3/16"	3/16"	3/8"	0	3/16"	3/8"	3/16"	3/16"	3/8"	3/16"	5/16"	1/2"	5/16"	1/16"	3/16"	1/8"
6, 7 & 8	Deflection due to wt. of steel	1/16"	1/16"	0	0	0	0	1/16"	1/16"	0	0	1/16"	0	0	1/16"	0	0	1/16"	0	0	1/16"	0	1/16"	1/8"	1/16"	0	0	0
	Deflection due to remaining D.L.	7/16"	1/2"	1/4"	0	0	-1/8"	5/16"	1/2"	1/4"	1/4"	7/16"	1/4"	1/4"	3/8"	0	3/16"	3/8"	3/16"	1/4"	7/16	1/4"	5/16"	1/2"	5/16"	1/16"	1/4"	3/16"
	Required shop camber	1/2"	9/16"	1/4"	0	0	-1/8"	3/8"	9/16"	1/4"	1/4"	1/2"	1/4"	1/4"	7/16"	0	3/16"	7/16"	3/16"	1/4"	1/2"	1/4"	3/8"	5/8"	3/8"	1/16"	1/4"	3/16"

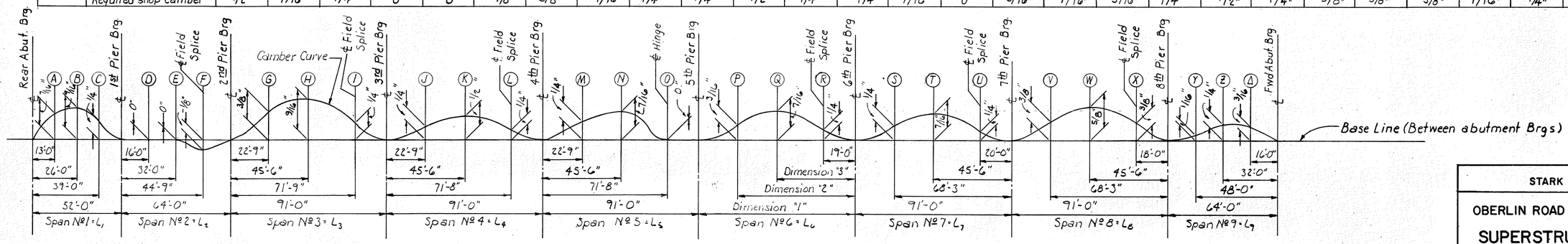

CAMBER DIAGRAM

Cambers shown are for Beams and Girders ①, ② & ③ only.

* GIRDER NUMBER	①	②	③	④	⑤	⑥	⑦	⑧
Dimension "1"	88'-0"	88'-10 15/16"	89'-9 7/8"	90'-8 13/16"	91'-3 1/8"	92'-3 3/8"	93'-3 5/8"	94'-3 13/16"
Dimension "2"	66'-0"	66'-7 7/32"	68'-4 13/32"	68'-0 5/8"	68'-5 11/32"	69'-1 17/32"	69'-11 11/16"	70'-8 27/32"
Dimension "3"	44'-0"	44'-5 15/32"	44'-10 15/16"	45'-4 13/32"	45'-7 9/16"	46'-1 13/16"	46'-7 13/16"	47'-1 25/32"

* NOTE:
See Superstructure Details on Sh. No. 14 for identification of beams and girders.

STARK COUNTY, OHIO

21/24

OBERLIN ROAD VIADUCT (Relocated)

SUPERSTRUCTURE DETAILS

STA. 189+14.87 to STA. 196+45.48

DESIGNED	DRAWN BY	TRACED BY	CHECKED BY	REVIEWED	REVISED
A.S.B.	A.S.B.		M.K.		

E. S. PRESTON & ASSOCIATES, LTD.

FED. RD. DIVISION	STATE	PROJECT	
2	OHIO	SU 1509 (1)	

50/57

STARK COUNTY ROAD 374

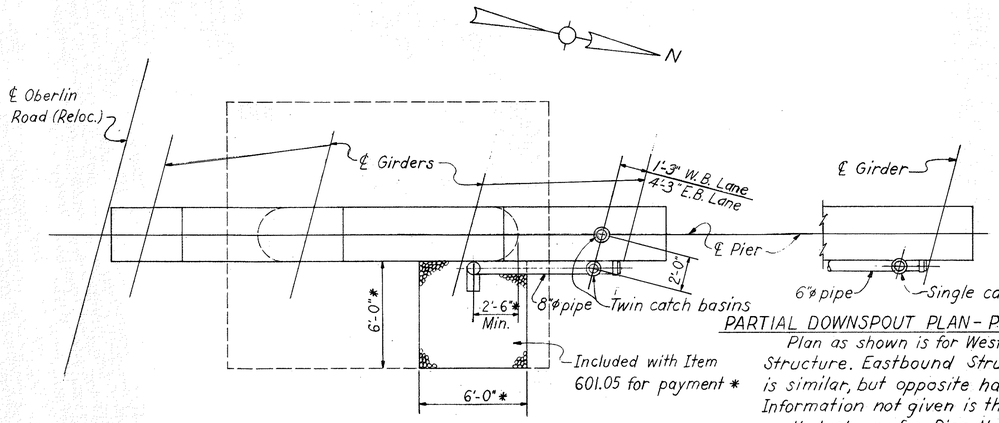

DOWNSPOUT PLAN - PIER NO. 3

Plan as shown is for Westbound Structure. Eastbound Structure is similar, but opposite hand.

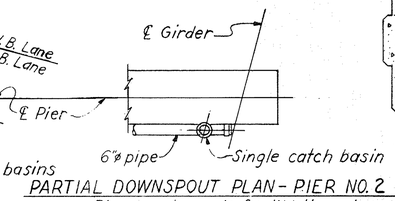

PARTIAL DOWNSPOUT PLAN - PIER NO. 2

Plan as shown is for Westbound Structure. Eastbound Structure is similar, but opposite hand. Information not given is the same as that shown for Pier No. 3.

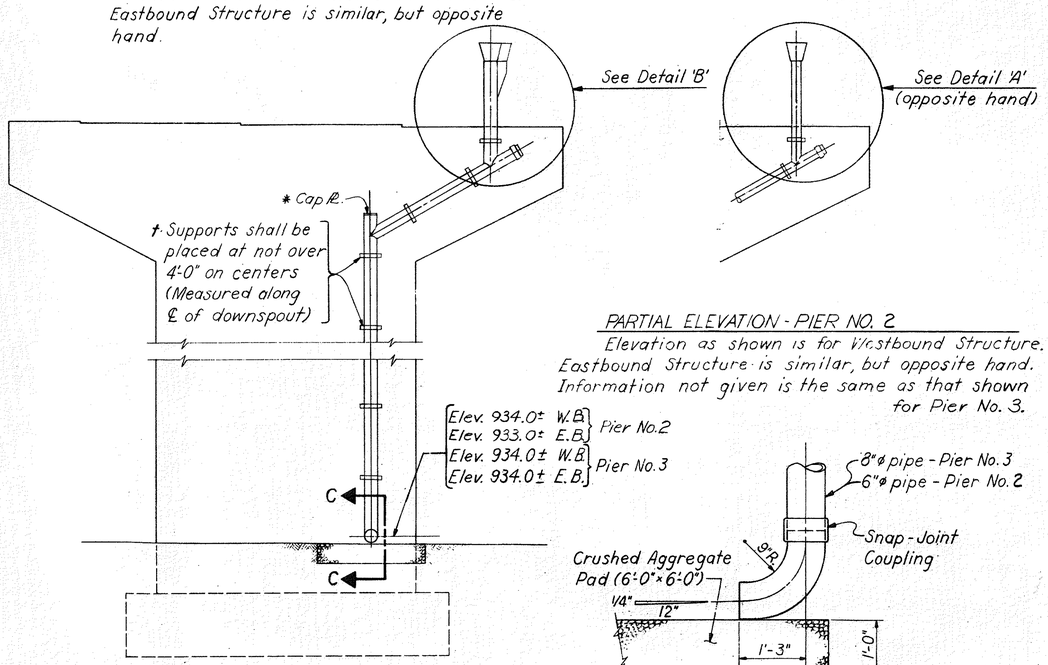

ELEVATION - PIER NO. 3

Elevation as shown is for Westbound Structure. Eastbound Structure is similar, but opposite hand.

PARTIAL ELEVATION - PIER NO. 2

Elevation as shown is for Westbound Structure. Eastbound Structure is similar, but opposite hand. Information not given is the same as that shown for Pier No. 3.

VIEW C-C (Typical)

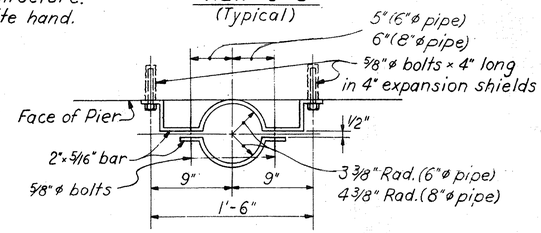

PIPE SUPPORT (Typical)

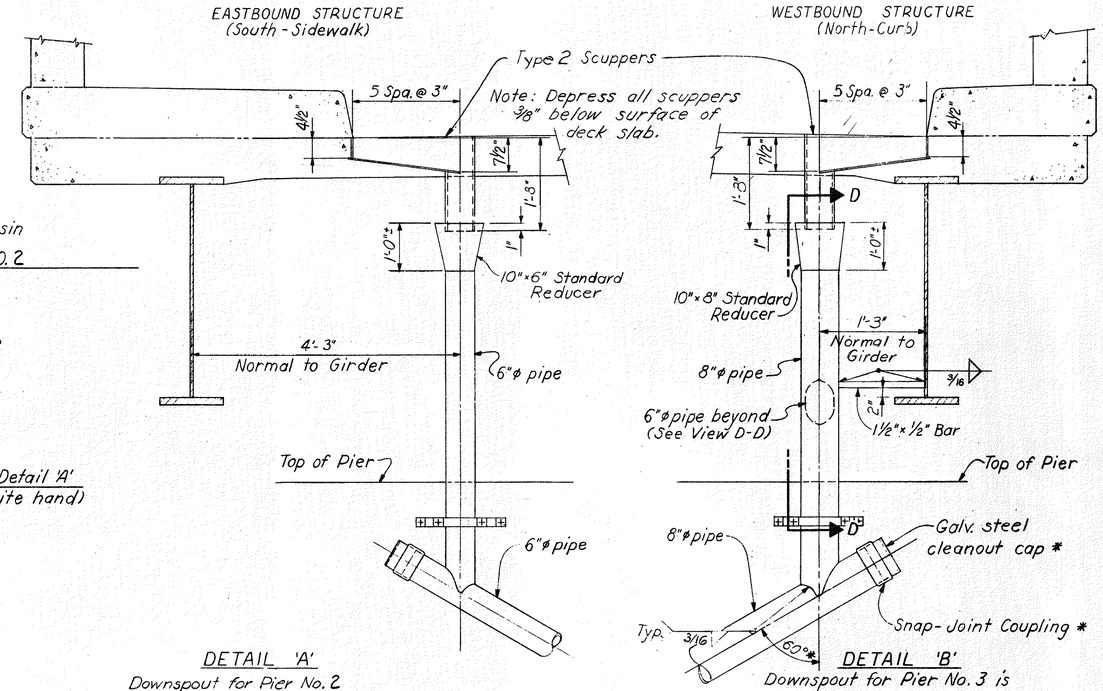

DETAIL 'A'

Downspout for Pier No. 2 shown. Downspout for Pier No. 3 will be similar to that shown in Detail 'B', but opposite hand.

DETAIL 'B'

Downspout for Pier No. 3 is shown. Downspout for Pier No. 2 will be similar to that shown in detail 'A', but opposite hand

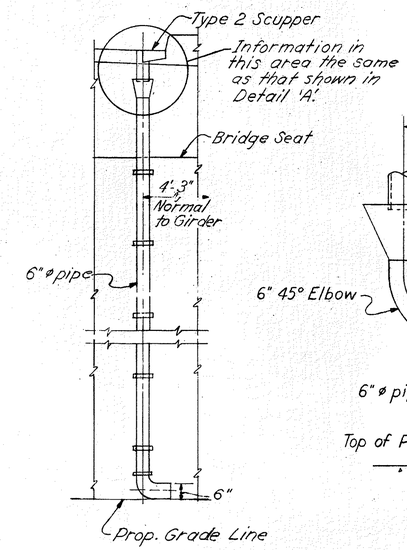

DOWNSPOUT AT FORWARD ABUTMENT - E. B. LANE

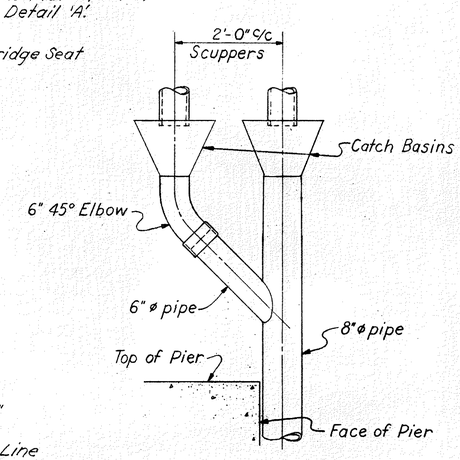

VIEW D-D

Note:

All scuppers shall be type 2. See standard Dwg. SD-1-65 for additional details.

Downspouts shall be std. hot-dip galvanized pipe. Joints shall be made by welding or by the use of snap-joint coupling. All welding shall be done before galvanizing. Supports for attaching downspouts shall be hot-dip galvanized steel.

On downspout bolts, galvanizing shall be as called for in Section 711.02.

* Typical all downspouts at Piers.

† Typical all downspouts.

22/24

STARK COUNTY, OHIO

OBERLIN ROAD VIADUCT (Relocated)

DRAINAGE DETAILS

STA. 189 + 14.87 to STA. 196 + 45.48

DESIGNED	DRAWN BY	TRACED BY	CHECKED BY	REVIEWED	REVISED
	A.J.M.	A.J.M.	M.K.		

E. S. PRESTON & ASSOCIATES, LTD.

FED. RD DIVISION	STATE	PROJECT	
2	OHIO	SU1509(1)	

STARK COUNTY ROAD 374

REAR ABUTMENT

Mark	Type	SERIES INCREMENT	Length	No. of Bars	Weight
A 301	6		7'-0"	43	314
A 302	1		9'-8"	48	484
A 303	1		7'-2"	43	321
A 304	ST		33'-4"	16	555
A 305	ST.		29'-8"	16	495
A 306	ST		14'-1"	8	118
A 307	ST.		13'-3"	2	28
A 308	ST		12'-0"	2	25
A 309	ST.		9'-0"	2	19
A 310	ST.		7'-0"	2	15
A 311	5		16'-7"	2	35
A 312	ST.		9'-3"	10	97
A 313	1		4'-4"	7	31
A 314	ST	0'-9"	5'-1" to 8'-10"	4 Series of 6	175
A 315	ST.		14'-6"	2	30
A 316	ST.		13'-6"	2	28
A 317	ST.		10'-9"	2	22
A 318	ST.		8'-6"	1	9
A 319	ST		6'-6"	1	7
A 320	5		13'-8"	2	28
A 601	2		13'-7"	48	979
A 602	12		13'-6"	61	1,420
A 603	1		16'-1"	3	72
A 604	ST.		14'-3"	8	171
A 801	ST.		37'-1"	14	1,386

FORWARD ABUTMENT

Mark	Type	SERIES INCREMENT	Length	No. of Bars	Weight
B 501	6		4'-10"	38	192
B 502	ST.		23'-6"	38	931
B 503	ST.		35'-11	70	2,622
B 504	1		8'-10"	1	9
B 505	1		8'-3"	1	9
B 506	1	0'-6½"	10'-10" to 19'-6"	6 Series of 17	1,614
B 507	1	0'-10"	8'-6" to 10'-2"	6 Series of 3	176
B 508	1		4'-11"	1	5
B 509	1		5'-5"	1	6
B 510	ST.		8'-6"	4	35
B 511	1		7'-4"	10	77
B 512	1		3'-1"	1	3
B 513	1		3'-4'	1	3
B 514	1		2'-9"	1	3
B 515	1		2'-6"	1	3
B 601	ST.		35'-11"	44	2,374
B 602	ST.		23'-6"	26	918
B 603	2		11'-4"	39	664
B 604	5		8'-10"	39	517
B 605	5		10'-3"	11	169
B 606	2		12'-1"	11	200
B 607	1		6'-3	48	451
B 608	ST.		14'-6"	49	1,067
B 609	6		9'-3"	36	500
B 901	ST.		37'-4"	32	4,061
B 902	6		6'-3"	96	2,040
B 903	ST.		35'-0"	12	1,428
B 904	ST.		40'-0"	12	1,632
B 905	ST.		23'-9"	24	1,938
B 906	ST.		18'-6"	12	755
B 907	ST.		15'-0"	12	612
B 908	ST.		9'-9"	12	398
B 909	ST.		6'-9"	12	275
B 910	ST.		4'-6"	12	184
B 1101	7		16'-0"	92	7,821
B 1102	10		12'-7"	12	802
B 1103	10		16'-10"	12	1,073
B 1104	10		23'-10"	12	1,518
B 1105	10		31'-6"	12	2,008

Abutments - Total 45,958 lbs.

ABUTMENTS—BENDING DIMENSIONS

Mark	a.	b.	c.	d.	e.	f.	Rad.
A 301	0'-7"	6'-6					
A 302	5'-5"	2'-3"					
A 303	3'-5"	2'-0"					
A 311	4'-0"	7'-5"	9'-2"	8'-3"			
A 313	1'-5"	1'-7"					
A 320	4'-0"	4'-6"	9'-2"	8'-3"			
A 601	2'-0"	5'-5"	6'-6"				
A 602	0'-11"	6'-8"	2'-6"	1'-5"	4'-8"		
A 603	1'-5"	7'-6"					
B 501	0'-10"	4'-1"					
B 504	7'-1"	1'-0"					
B 505	6'-6"	1'-0					
		4'-10"					
B 506	1'-5"	to	(Vary 3¼" increments)				
		9'-2"					
		3'-8					
B 507	1'-5"	to	(Vary 5" "increments)				
		4'-6					
B 508	3'-2"	1'-0"					
B 509	3'-8"	1'-0"					
B 511	0'-9"	3'-5"					
B 512	1'-4'	1'-0"					
B 513	1'-7"	1'-0"					
B 514	1'-0"	1'-0"					
B 515	0'-9"	1'-0"					
B 603	3'-0"	0'-11"	7'-9"				
B 604	2'-0"	6-0	2'-10"	2'-0"			
B 605	2'-0"	7'-5"	2'-10"	2'-0"			
B 606	1'-11"	1'-3"	9'-1"				
B 607	3'-3"	1'-7"					
B 609	1'-0"	8'-5"					
B 902	1'-6"	5'-0"					
B 1101	14'-5"						
B 1102	3'-7"	1'-11"	3'-3¼"	8'-0"	5'-9"	1'-6"	1'-9½"
B 1103	3'-7"	1'-11"	3'-3¼"	12'-0"	10'-0"	2'-11"	1'-9½"
B 1104	3'-7"	2'-5"	4'-2¼"	18'-6"	16'-0"	4'-3"	2'-3½"
B 1105	3'-7'	2'-5"	4'-2¼"	26'-0"	23'-9"	6'-2"	2'-3½"

NOTE: FOR BENDING DETAILS SEE SHEET 52.

PIERS

Mark	Type	BENDING DIMENSIONS a.	b.	c.	d.	Rad.	Length	No. of Bars	Weight
P 501	ST.						11'-3"	464	5,444
P 502	11	3'-11"	1'-7"			1'-2⅜"	7'-1"	464	3,428
P 503	ST.						14'-0"	32	467
P 504	ST.						25'-0"	6	156
P 505	ST.						33'-5"	6	209
P 506	5	3'-8"	1'-7"	10'-2"	9'-6"		11'-9"	12	147
P 507	ST.						23'-10"	6	149
P 508	ST.						30'-5"	6	190
P 509	5	3'-11"	1'-7"	9'-0"	8'-1"		10'-7"	12	132
P 510	1	2'-8"	3'-2"				8'-9"	304	2,774
P 511	1	2'-8"	4'-7"				11'-7"	996	12,033
P 512	1	2'-8"	3'-7"				9'-7"	304	3,039
P 513	1	2'-8"	7'-2"				16'-9"	54	943
P 514	1	2'-8"	7'-4'				17'-1"	90	1604
P 515	ST.						22'-5"	10	234
P 516	ST.						32'-2"	2	67
P 517	5	3'-8"	1'-7"	9'-9"	9'-0"		11'-4"	20	236
P 518	ST.						20'-11"	10	218
P 519	ST.						29'-2"	2	61
P 520	5	3'-8"	1'-7"	8'-4"	7'-6"		9'-11"	20	207
P 521	ST.						29'-8"	8	248
P 522	ST.						32'-8"	8	273
P 801	8	17'-8"					19'-10"	192	10,166
P 802	6	1'-1"	3'-0"				5'-11"	320	5,055
P 803	ST.						13'-9"	160	5,874
P 804	ST.						24'-6"	128	8,373
P 805	ST.						22'-6"	32	1,922
P 806	8	17'-2"					19'-4"	28	1,445
P 807	8	18'-8"					20'-10"	28	1,558
P 1001	8	13'-2"					16'-0'	44	3,029
P 1101	6	6'-7"	1'-6"				7'-9"	192	7,910
P 1102	ST.						19'-9"	96	10,073
P 1103	ST.						38'-4"	32	6,517
P 1104	ST.						37'-7"	32	6,390
P 1105	ST.						36'-9"	32	6,248
P 1106	ST.						32'-11"	23	4,022
P 1107	1	32'-11'	3'-1"				38'-5"	19	3,878
P 1108	ST.						29'-11"	12	1,907
P 1109	1	29'-11"	3'-1"				35'-5"	15	2,823
P 1110	1	32'-2"	3'-1"				37'-9"	31	6,217
P 1111	ST.						32'-2"	34	5,811
P 1112	1	29'-2"	3'-1"				34'-9"	25	4,616
P 1113	ST.						29'-2"	16	2,479
P 1114	8	14'-8"					17'-10"	174	16,486
P 1115	8	13'-2"					16'-4"	216	18,740
								Piers - Total	173,798

23/24

STARK COUNTY, OHIO

OBERLIN ROAD VIADUCT (Relocated)

STEEL REINFORCING LIST

STA. 189+14.87 to STA. 196+45.48

DESIGNED	DRAWN BY	TRACED BY	CHECKED BY	REVIEWED	REVISED
	H.C.	H.C.	M.K.		

E. S. PRESTON & ASSOCIATES, LTD.

FED. RD. DIVISION	STATE	PROJECT	
2	OHIO	SU 1509 (1)	

52/57

STARK COUNTY ROAD 374

SUPERSTRUCTURE

Mark	Type	SERIES INCREMENT	Length	No. of Bars	Weight
S 301	1		2'-5"	2445	6,171
S 302	1		9'-6"	486	1,774
S 303	15		4'-5"	977	4,504
S 304	13		5'-7"	977	5,689
S 305	1		6'-6"	491	3,329
S601	ST.		91'-4"	670	31,532
S 602	ST.		34'-4"	675	34,809
S 603	ST.		30'-0"	3120	140,587
S 604	ST.		26'-0"	49	1,914
S 605	ST.		32'-0"	382	18,360
S 606	ST.		35'-1"	382	20,130
S 607	ST.		4'-0"	26	156
S 608	ST.		36'-0"	343	18,547
S 609	ST.	2'-0"	24'-0" to 30'-0"	1 series of 4	162
S 610	ST.	2'-0"	26'-6" to 32'-6"	1 series of 4	177
S 611	ST.		32'-6"	130	6,347
S612	ST.		23'-0"	130	4,401
S 701	ST.		31'-4"	670	42,910
S 702	ST.		34'-4"	675	47,369
S 703	ST.		32'-0"	382	24,986
S 704	ST.		35'-1"	382	27,393
S 705	ST.	2'-0"	24'-0" to 30'-0"	1 series of 4	221
S 706	ST.	2'-0"	26'-6" to 32'-6"	1 series of 4	241
		LIGHTING PILASTER			
L401	6		4'-0"	36	96
L402	14		8'-3"	56	309
L403	14		9'-10"	7	46
			Superstructure - Total		442,160

SUPERSTRUCTURE BENDING DIMENSIONS

Mark	a.	b.	c.	d.	e.	f.	Rad.
S 501	1'-5"	0'-7"					
S 502	2'-6"	0'-7"					
S 503	1'-1"	1'-5"	2"	6"	1"	1'-5" ±	
S 504	0'-8"	2'-2"					
S 505	5'-6	0'-7"					
		LIGHTING PILASTER					
L401	1'-3"	2'-8"					
L402	1'-0"	1'-11"	1'-1"	1'-11"			
L403	1'-0"	2'-4	1'-6"	2'-4"			

RAILING BENDING DIMENSIONS

Mark	a.	b.	c.	d.	e.	f.	Rad.
R 304	0'-8"	1'-6"	0'-6½"	0'-0¾"			
R 305	0'-6"	0'-9"	0'-7⅞"	0'-2⅜"	0'-7½"	2'-8½"	0'-1⅜"
R 307	0'-8"	1'-1"					

RAILING

Mark	Type	SERIES INCREMENT	Length	No. of Bars	Weight
R 301	ST.		15'-2"	260	
R 302	ST. *		16'-4"	12	
R 303	ST.		6'-1"	12	
R 304	3		4'-2"	8	
R 305	9		5'-3"	8	Included with railing for payment.
R 306	ST.		3'-0"	8	
R 307	13		3'-5"	8	
R 308	ST.		16'-0"	4	
R 309	ST.		14'-10"	88	
R 310	ST.		12'-4"	12	
R 311	ST.		12'-0"	4	

* - Bend bars at Forward Abutment to fit in field.

REPLACEMENT BARS

Mark	No.	Length	Type
RE1100	6	7'-6"	S
RE1000	1	7'-2"	S
RE900	1	6'-10"	S
RE800	2	6'-6"	S
RE700	8	6'-2"	S
RE600	15	5'-11"	S
RE500	4	5'-7"	S

BENDING DETAILS

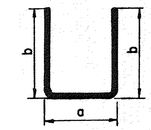

TYPE 1

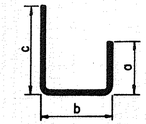

TYPE 2

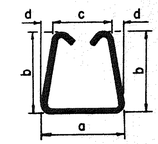

TYPE 3

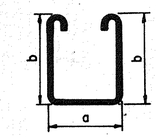

TYPE 4

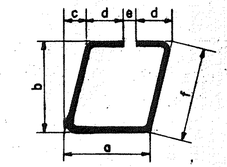

TYPE 15

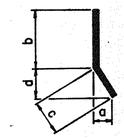

TYPE 5

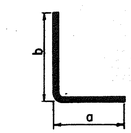

TYPE 6

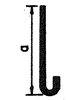

TYPE 7

TYPE 8

BAR SIZE is indicated in the bar mark. The first digit where three digits are used, and the first two digits where four digits are used indicate the bar size number. For example, A700 is a No. 7 bar size and A1014 is a No. 10 size.

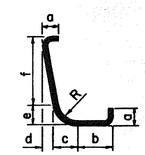

TYPE 9

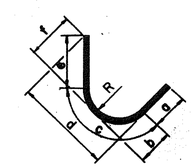

TYPE 10

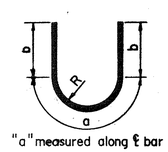

"a" measured along ℄ bar

TYPE 11

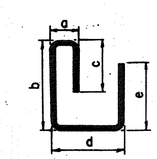

TYPE 12

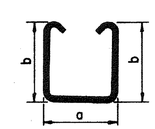

TYPE 13

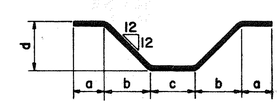

TYPE 14

STARK COUNTY, OHIO 24/24

OBERLIN ROAD VIADUCT (Relocated)

STEEL REINFORCING LIST

STA 189+14.87 to STA. 196+45.48

DESIGNED	DRAWN BY	TRACED BY	CHECKED BY	REVIEWED	REVISED
	H.C.	H.C.	M.K.		

E. S. PRESTON & ASSOCIATES LTD.

FED. RD. DIVISION	STATE	PROJECT	
2	OHIO	SU-1509(1)	

53/57

OBERLIN ROAD VIADUCT
STARK COUNTY ROAD 374

1/5

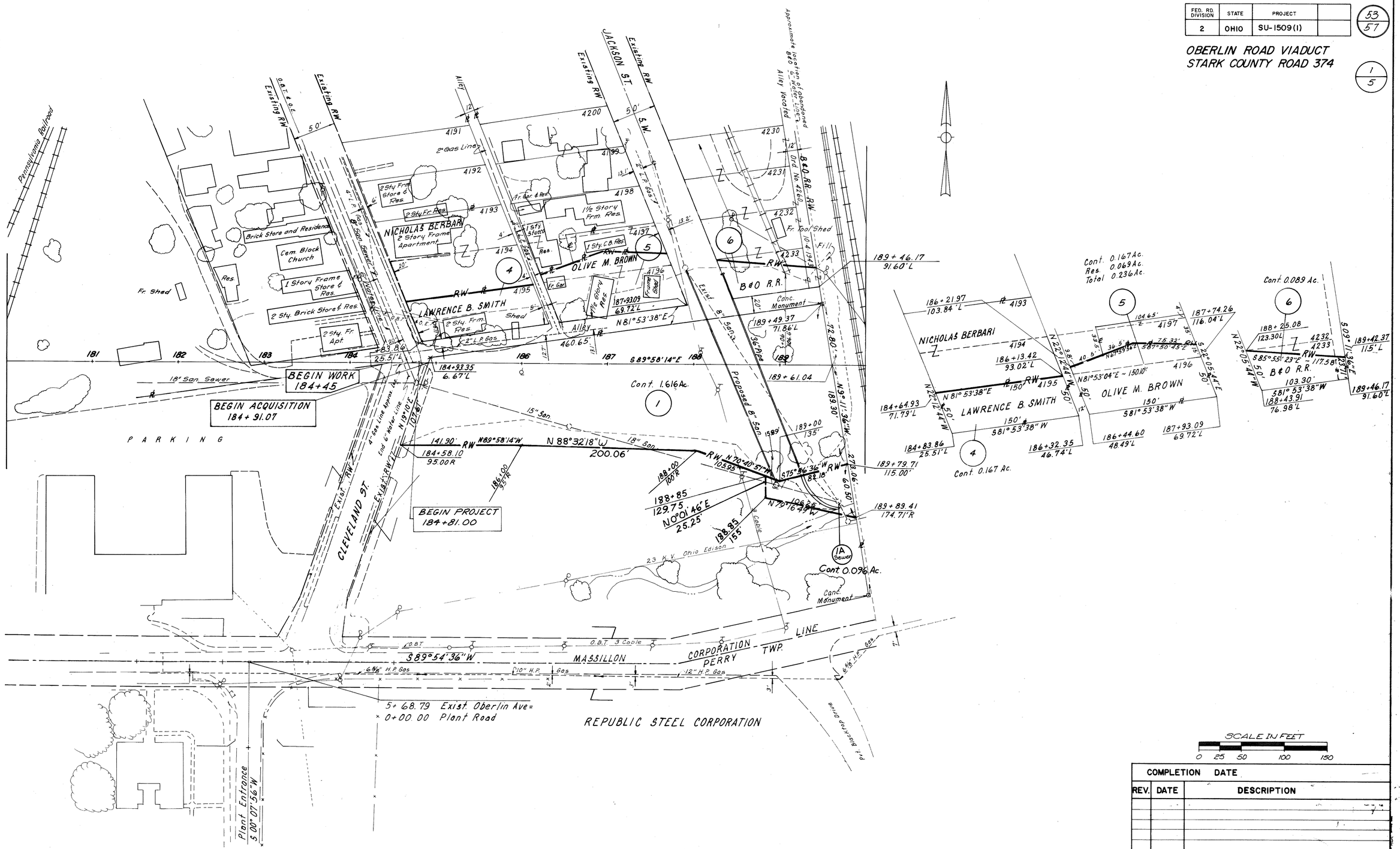

COMPLETION DATE		
REV.	DATE	DESCRIPTION

R/W STA. 180+00 - STA. 190+00

FED. RD. DIVISION	STATE	PROJECT	
2	OHIO	SU-1509 (1)	

54/57

OBERLIN ROAD VIADUCT
STARK COUNTY ROAD 374

2/5

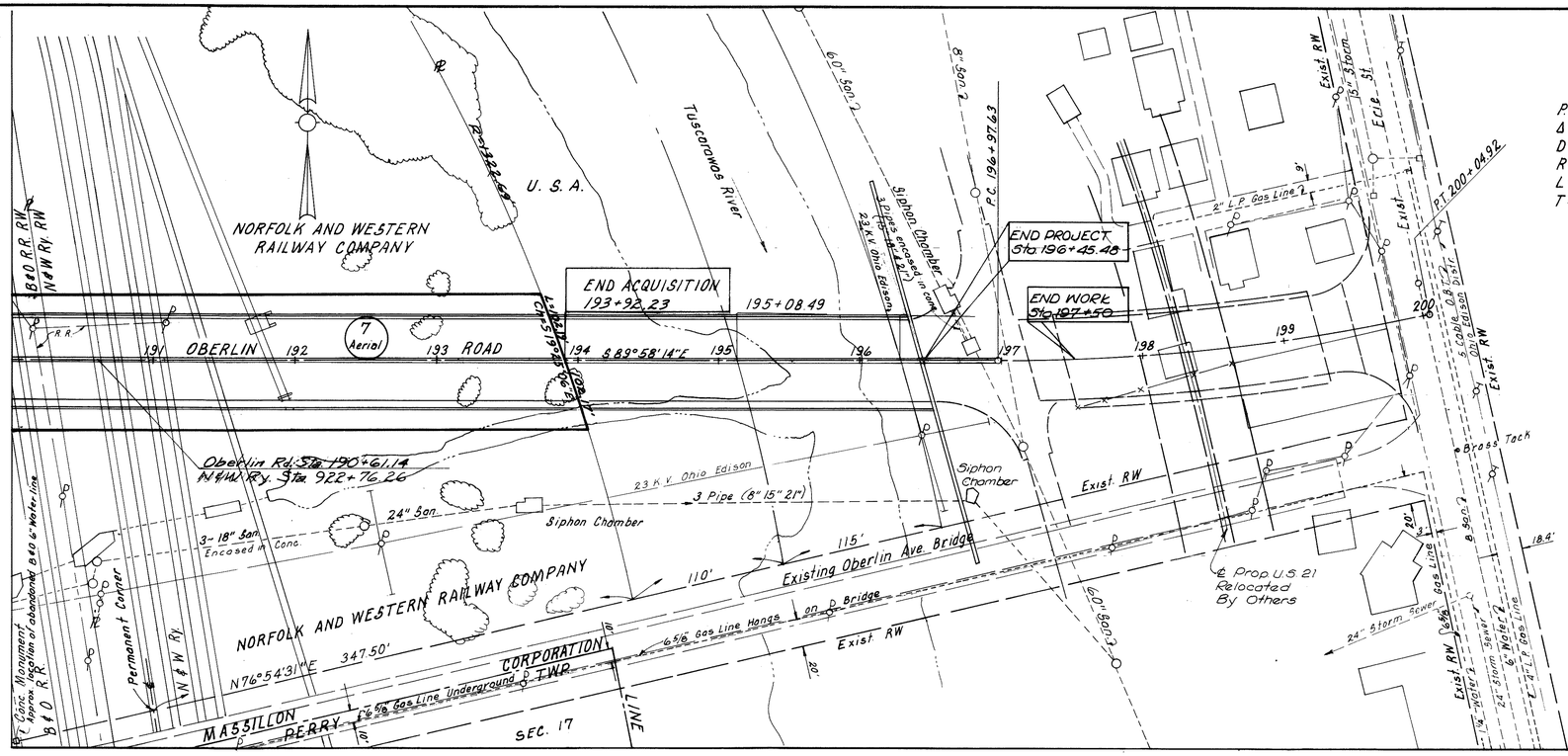

CURVE DATA
P.I. Sta. 198+51.87
Δ = 12°17'30" Lt.
D = 4°00'00"
R = 1432.39'
L = 307.29'
T = 154.24'

SUMMARY OF RW

PARCEL NO.	OWNER	DEED RECORD BOOK	DEED RECORD PAGE	DEED AREA	TO BE ACQUIRED LAND	TO BE ACQUIRED BLDGS.	NET RESIDUE LEFT	NET RESIDUE RIGHT	SHEET NO.	REMARKS
1	Republic Steel Corporation	1044	197	-	1.616	-			1	
1A-Sewer	" " "	"	"	-	0.096	-			1	
						-			1	
						-			1	
4	LAWRENCE B. SMITH	2964	318	-	0.167	Yes			1	
5	OLIVE M. BROWN	2961	57							
		2966	472	9906 s.f.	0.	Yes			1	
6	BALTIMORE & OHIO R.R.				0.089				1	See sheet 3 for slope, aerial & occupational easements.
7A to 7K	NORFOLK & WESTERN Ry. Co.									See sheet 4 & 5 for occupational & aerial easements.

SCALE IN FEET
0 25 50 100 150

COMPLETION DATE		
REV.	DATE	DESCRIPTION

R/W STA. 190+00 - STA. 200+00

FED. RD. DIVISION	STATE	PROJECT	
2	OHIO	SU-1509(1)	

55/57

OBERLIN ROAD EASEMENT OVER B. & O. RAILROAD

OBERLIN ROAD VIADUCT
STARK COUNTY ROAD 374

3/5

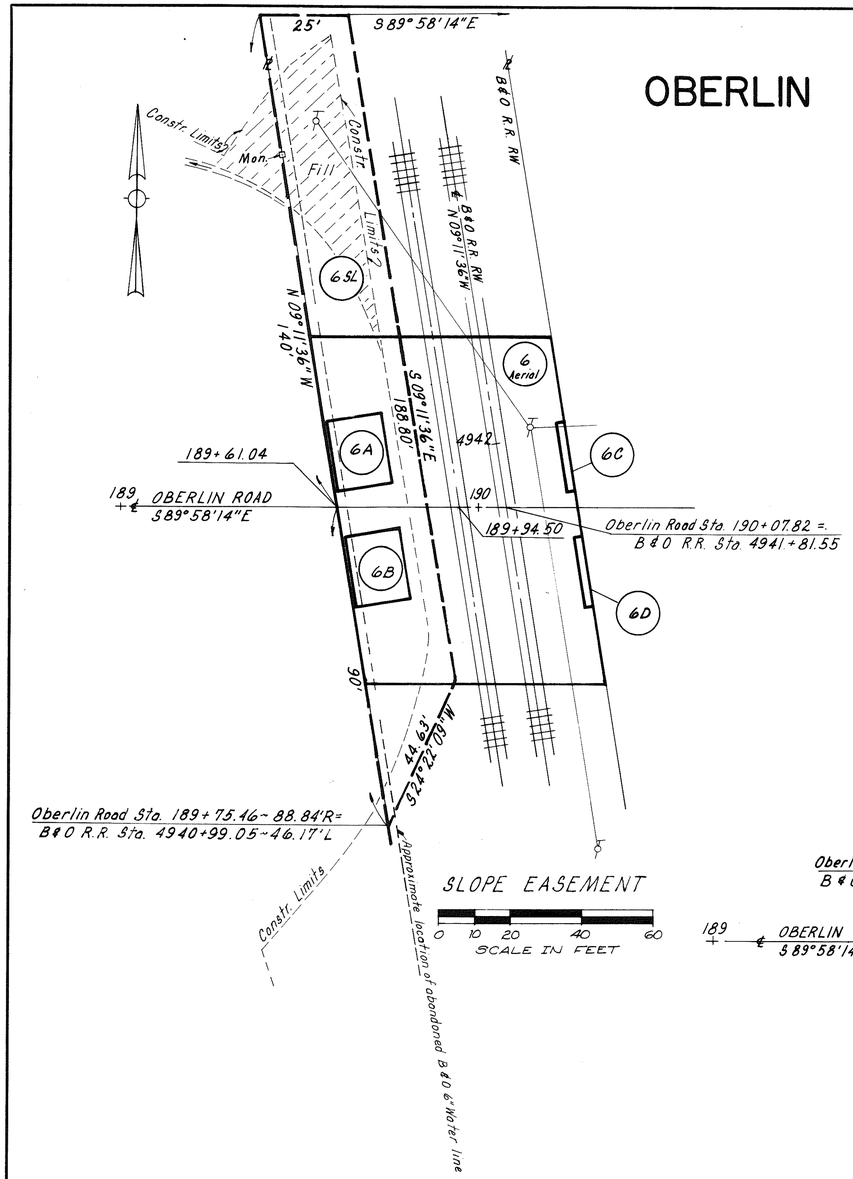

SLOPE EASEMENT

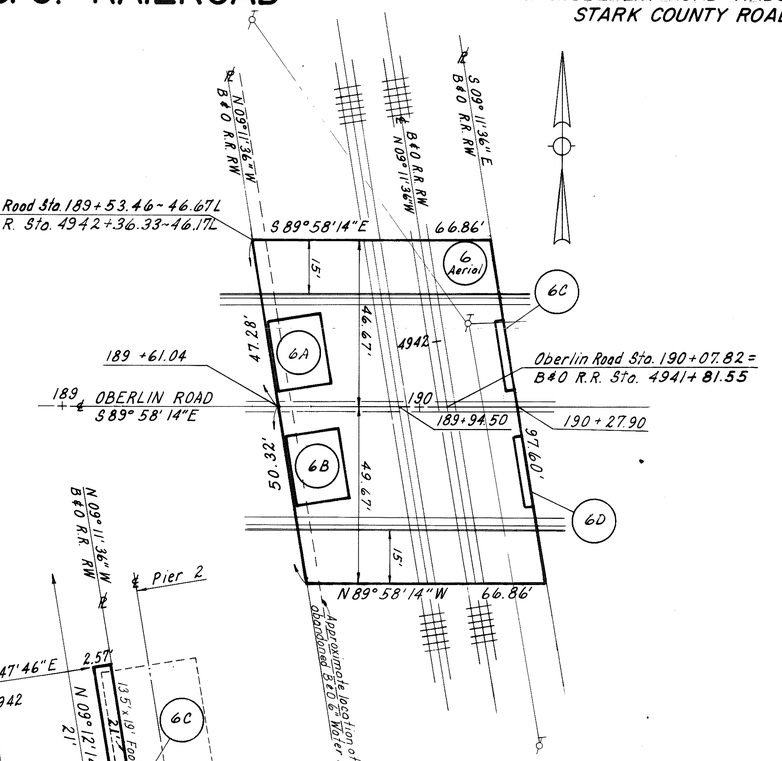

AERIAL EASEMENT

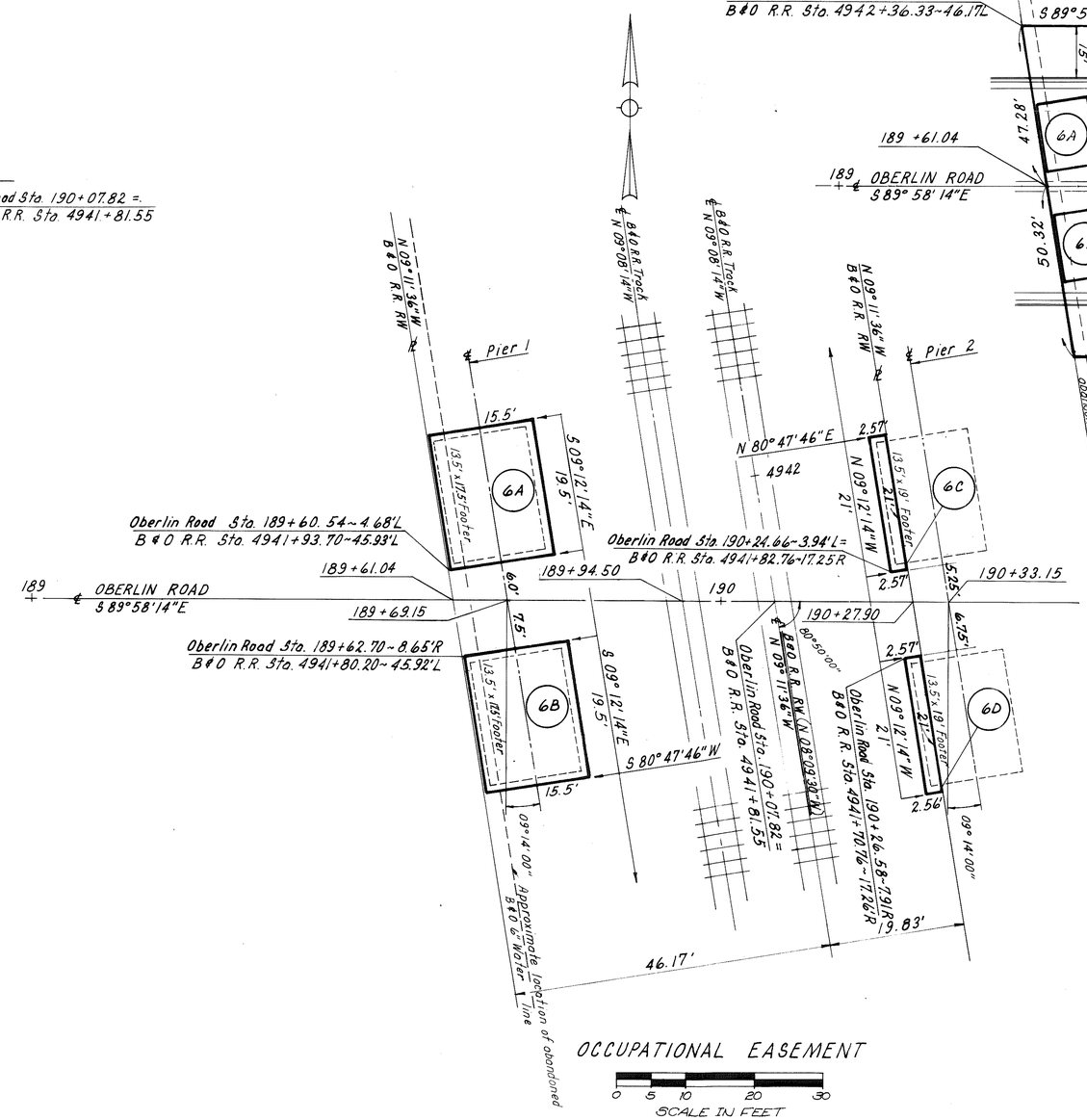

OCCUPATIONAL EASEMENT

PARCEL NUMBER	EASEMENT REQUIRED	TOTAL AREA	AREA OF OVERLAP		
			HIGHWAY	AERIAL	SLOPE
6 Aerial	AERIAL	6,441	712		2408
6 A	HIGHWAY	302		302	302
6 B	"	302		302	302
6 C	"	54		54	
6 D	"	54		54	
6 SL	SLOPE	5167		2408	

COMPLETION DATE		
REV.	DATE	DESCRIPTION

R/W B & O RAILROAD

OBERLIN ROAD EASEMENT OVER N. & W. RAILWAY

FED. RD. DIVISION	STATE	PROJECT	
2	OHIO	SU-1509(1)	

56
57

OBERLIN ROAD VIADUCT
STARK COUNTY ROAD 374

4
5

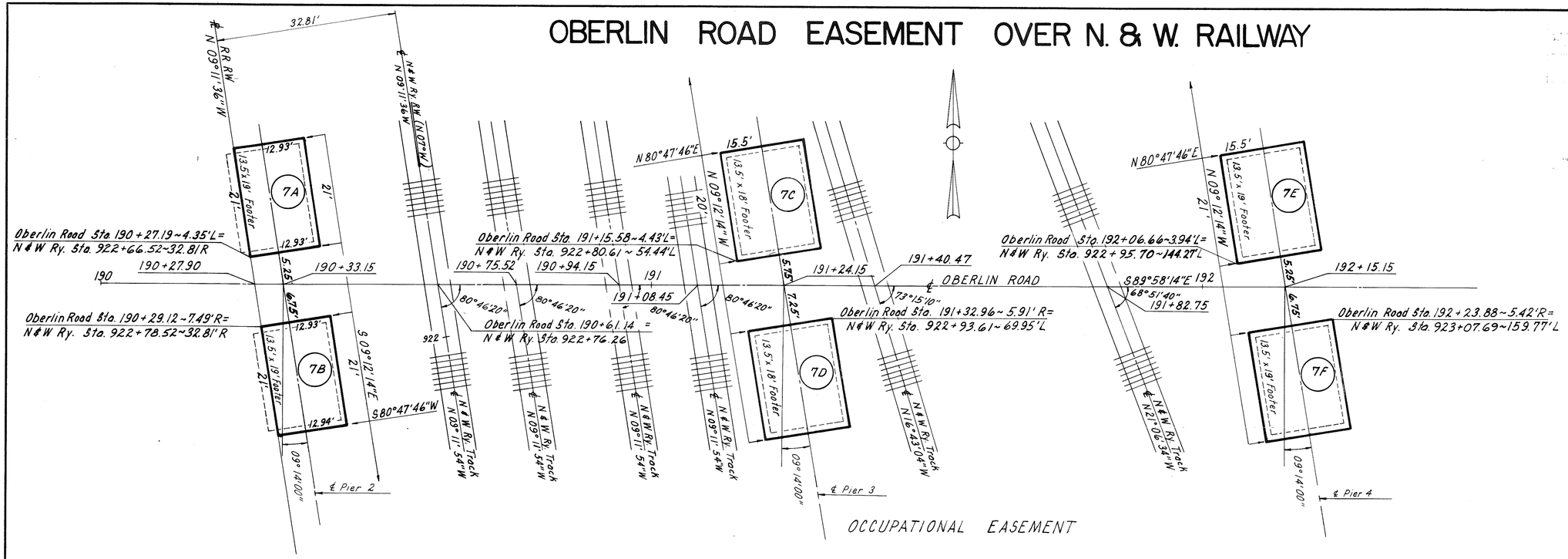

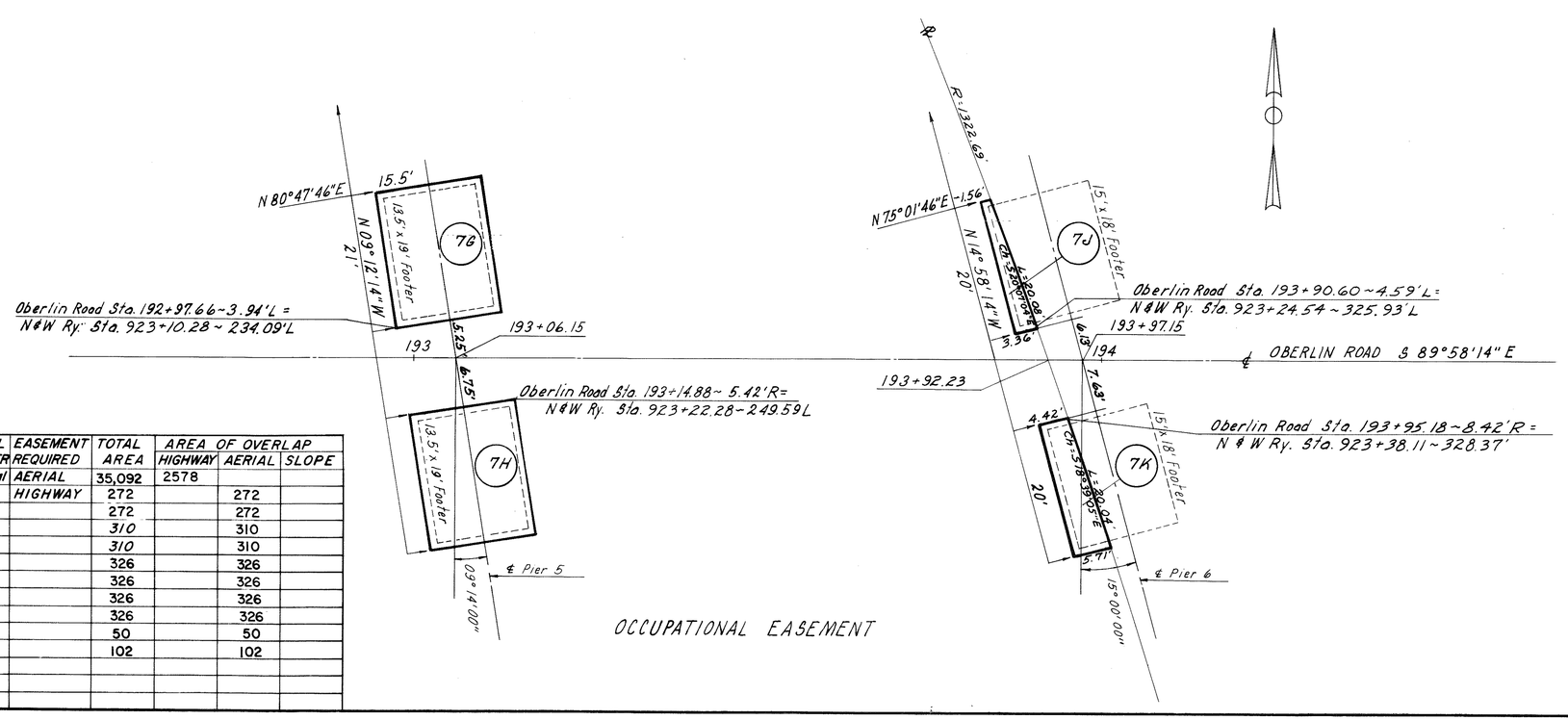

PARCEL NUMBER	EASEMENT REQUIRED	TOTAL AREA	AREA OF OVERLAP HIGHWAY	AERIAL	SLOPE
7 Aerial	AERIAL	35,092	2578		
7 A	HIGHWAY	272		272	
7 B		272		272	
7 C		310		310	
7 D		310		310	
7 E		326		326	
7 F		326		326	
7 G		326		326	
7 H		326		326	
7 J		50		50	
7 K		102		102	

SCALE IN FEET
0 5 10 20 30

COMPLETION DATE

REV	DATE	DESCRIPTION

R/W NORFOLK AND WESTERN RAILWAY COMPANY

FED. RD. DIVISION	STATE	PROJECT	
2	OHIO	SU-1509(1)	

57/57

OBERLIN ROAD VIADUCT
STARK COUNTY ROAD 374

5/5

OBERLIN ROAD EASEMENT OVER N. & W. RAILROAD

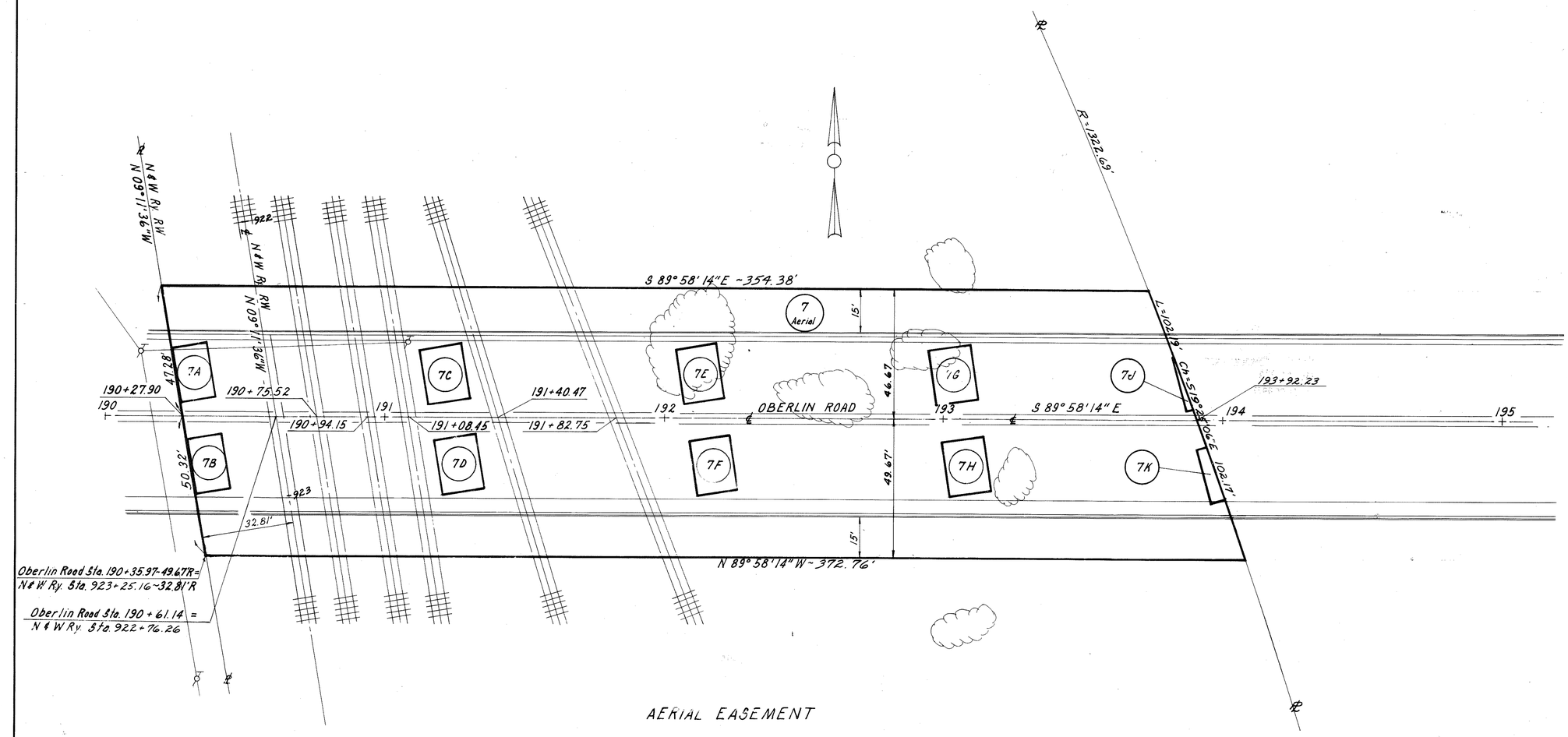

Note: See sheet 4 for area table

SCALE IN FEET
0 10 20 40 60

COMPLETION DATE		
REV.	DATE	DESCRIPTION

R/W N & W RAILWAY COMPANY