CITY OF MASSILLON, OHIO

151 LINCOLN WAY EAST
MUNICIPAL GOVERNMENT ANNEX
CITY ADMINISTRATION BUILDING
MASSILLON, OHIO 44646
PHONE 330-830-1722 FAX 330-830-1786

PERMIT DATE: 10/31/2005

PERMIT NO. 3544

PERMIT TO TAP SANITARY SEWER

This permit is issued subject to the latest Codified Ordinances of the City of Massillon, OH. The City Engineer to be notified 24 hours in advance of start of work (330) 830-1722. All permits issued under this ordinance are void after 120 days from date of issuance.

RECEIVED OF:

PERMIT TYPE: ☑ NEW ☐ REPAIR ☐ CUTOFF

CONTRACTOR INFORMATION

CONTRACTOR: MALAVITE EXCAVATING
CONTACT: GUST MALAVITE
ADDRESS:
CITY:
STATE:
ZIP:
PHONE:
FAX:
SURETY:

SITE INFORMATION

OWNER'S NAME: RON MONTAGUE
STREET NUMBER: 1102
STREET NAME: 14 ST SE
CITY LOT NUMBER 16836
PURPOSE OF CUT: SANITARY
ZONING CLASS:
STREET SIDE: EAST
PHONE OTHER: (330) 479-0345

NOTE: This permit covers work outside of the building ONLY. Any work inside walls of the building is subject to the Massillon Board of Health Regulations.

SANITARY SEWER CONNECTION:

USAGE: ◉ RESIDENTIAL ○ COMMERCIAL ○ INDUSTRIAL

DATE INSPECTED 11/1/2005

located on the EAST side of 14TH ST SE between WALNUT RD SE and DEAD END

Direction from downstream Manhole: SOUTH

Distance from downstream Manhole:

Connection Length: 62.00 (FEET)

Connection Depth: 7 (FEET)

Size of Sewer Pipe: 6 (INCHES)

Pipe Material: PLASTIC

INSPECTORS NAME: JEFF KING

COMMENTS:

SKETCH: DRAWING #: #3544

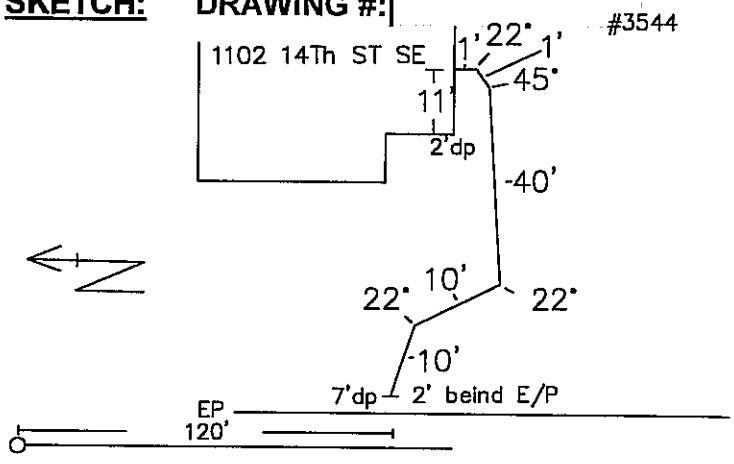

SANITARY SEWER PERMIT FEE: $100.00

TOTAL COST: $100.00

TWO WORKING DAYS BEFORE YOU DIG
Ohio Utilities Protection Service
Call 1-800-362-2764 Toll Free....
Non-Members must be called directly.

AUTHORIZED BY: DIRECTOR OF PUBLIC SAFETY AND SERVICE

ISSUED BY: LINDA MIKUTEL