SITE IMPROVEMENT PLANS FOR

WESTBROOK ESTATES – PHASE III

SITUATED IN THE CITY OF MASSILLON, COUNTY OF STARK, STATE OF OHIO

JULY, 2005
(LAST REV. 4/1/07)

CITY OF MASSILLON GENERAL NOTES

1. CONTRACTOR SHALL CHECK DETAIL DRAWINGS FOR MINIMUM GRADE AND BACKFILL REQUIREMENTS.
2. ALL COMBINATION CONCRETE CURB AND GUTTER TO BE MASSILLON STANDARD, EXCEPT WHERE VARIATIONS ARE TO BE EXTENDED OR MET. SEE SPECIFICATION BOOK AND PLANS.
3. EXCAVATION FOR CONCRETE CURB AND GUTTER SHALL BE INCLUDED IN THE COST PER LINEAL FOOT OF SAID CURB AND GUTTER.
4. ALL CATCH BASINS AND MANHOLES TO BE ADJUSTED TO GRADE WHERE NECESSARY.
5. ALL CONCRETE TO BE 1:2: 4–6 BAG MIX. 28 DAY – 3000 PSI COMPRESSIVE STRENGTH: MAX. SLUMP TO BE 4".
6. ALL MATERIALS USED WILL BE NEW – NO SALVAGED MATERIAL WILL BE ACCEPTED, EXCEPT CASINGS, AS APPROVED.
7. IF CONTRACTOR EXCAVATES DEEPER THAN NECESSARY FOR CURB AND GUTTER, CONTRACTOR WILL FURNISH O.D.O.T. 304 AGGREGATE AND TAMP BEFORE CURB AND GUTTER IS CONSTRUCTED.
8. IF SUBGRADE IS UNSUITABLE, CONTRACTOR WILL EXCAVATE AND REPLACE SUCH MATERIAL WITH CRUSHER RUN GRAVEL, AT THE DISCRETION OF THE INSPECTOR OR CITY ENGINEER. THIS FILL TO BE PLACED IN 6" LAYERS OR LESS. SAID FILL TO BE COMPACTED TO 95% LABORATORY DRY WEIGHT BEFORE ADDITIONAL LAYERS ARE ADDED. CONTRACTOR WILL BE PAID FOR EXTRA GRAVEL AND EXCAVATION. THIS COMPACTION TO BE DONE BEFORE FORMS ARE PLACED.
9. CONTRACTOR TO BACKFILL CURB IMMEDIATELY AFTER CURB HAS BEEN IN PLACE FOR 48 HOURS.
10. CONTRACTOR WILL NOTIFY ENGINEER WHEN HE IS IN NEED OF CONSTRUCTION STAKES AND THIS OFFICE WILL COMPLY WITHIN A PERIOD OF 48 HOURS.
11. ALL STORM SEWER PIPES WITHIN PAVEMENT LIMITS SHALL BE REINFORCED CONCRETE PIPE (O.D.O.T. 706.02) AND SHALL BE TYPE 'B' CONDUIT IN ACCORDANCE WITH O.D.O.T. 603 CLASS 'B' BEDDING AND GRANULAR BACKFILL. ALL STORM SEWER OUTSIDE PAVEMENT LIMITS SHALL BE SMOOTH LINED CORRUGATED POLYETHYLENE (O.D.O.T. 707.33) OR REINFORCED CONCRETE PIPE (O.D.O.T. 706.02) AND SHALL BE TYPE 'C' CONDUIT IN ACCORDANCE WITH O.D.O.T. 603 WITH CLASS 'C' BEDDING AND SUITABLE SOIL BACKFILL.
12. DOWNSPOUT HEADERS SHALL BE 6" PVC (SDR 21) PIPE (UNLESS OTHERWISE NOTED ON THE PLANS) AND SHALL BE DIRECTLY CONNECTED TO THE STORM SEWER WITH APPROVED TEE OR SADDLE CONNECTIONS. HEADERS SHALL EXTEND 12' INTO THE LOTS OR BEYOND FURTHEST UTILITY, WHICHEVER IS GREATER.
13. CONTRACTOR SHALL NOTIFY ALL UTILITY COMPANIES BEFORE ANY WORK IS BEGUN. THE CITY OF MASSILLON IS NOT RESPONSIBLE FOR ANY LOST TIME DUE TO UTILITY RELOCATION.
14. MANHOLES AND CATCH BASINS SHALL BE CONSTRUCTED IN CONFORMANCE WITH MASSILLON CITY STANDARDS.
15. CONTRACTOR SHALL CONTACT THE CITY OF MASSILLON ENGINEERING DEPARTMENT (GREG McCUE) AT (330)830–1722 AT LEAST 2 DAYS PRIOR TO THE INITIATION OF CONSTRUCTION TO SCHEDULE A PRE–CONSTRUCTION MEETING.
16. STREET LIGHTING IS REQUIRED. DEVELOPER SHALL COORDINATE WITH ELECTRIC UTILITY COMPANY FOR POLE LOCATION AND TYPE. THE DEVELOPER SHALL INSTALL, AT HIS COST, STREET SIGNS REPRESENTING THE NAMES OF ALL STREETS AT ALL INTERSECTIONS. DEVELOPER ALSO RESPONSIBLE FOR STOP SIGNS AND DIRECTIONAL SIGNS AS NECESSARY. ALL SIGNS SHALL CONFORM WITH CITY OF MASSILLON REGULATIONS.
17. WHEN SPECIFIED ON PLANS OR SPECIFICATIONS, CONTINGENCY ITEMS ARE TO BE PERFORMED ONLY UNDER THE DIRECTION OF THE CITY ENGINEER. THE CONTRACTOR SHALL NOT ORDER ANY CONTINGENCY MATERIAL OR PERFORM ANY WORK UNTIL DIRECTED BY THE ENGINEER. THE ACTUAL WORK LOCATION AND QUANTITIES FOR SUCH ITEMS SHALL BE DOCUMENTED BY THE CONTRACTOR AND THE ENGINEER. THE DEVELOPER IS RESPONSIBLE FOR THE COST OF SUCH ITEMS AND SHALL NOT BE PART OF THE BID DOCUMENT.

17a. BEFORE ACCEPTANCE OF THE ROAD PAVEMENT SUBGRADES BY THE CITY OF MASSILLON ENGINEER, SUBGRADES SHALL BE TESTED IN ACCORDANCE WITH O.D.O.T. ITEM 203.13. IN LIEU OF SUBGRADE TESTING PER ITEM 203.13, PROOF ROLLING IN ACCORDANCE WITH O.D.O.T. ITEM 203.14 MAY BE SUBSTITUTED.

17b. WHEREVER UNSTABLE SOIL SUBGRADE CONDITIONS ARE ENCOUNTERED THAT ARE UNSUITABLE PER O.D.O.T. 203 SPECIFICATION AND/OR DETERMINED BY THE CITY OF MASSILLON ENGINEERING DEPARTMENT, ADDITIONAL EXCAVATION AND SUBSEQUENT BACKFILLING SHALL BE DONE BY THE DEVELOPER'S CONTRACTOR AND PAID FOR BY THE DEVELOPER UNTIL SUCH CONDITIONS ARE CORRECTED AND APPROVED BY THE CITY OF MASSILLON ENGINEER.

17c. SUBGRADE TESTING OR PROOF ROLLING MUST BE WITNESSED AND APPROVED BY THE CITY OF MASSILLON ENGINEERING DEPARTMENT PRIOR TO THE PLACEMENT OF THE PAVEMENT SUBBASE MATERIAL. CONTRACTOR SHALL CONTACT THE CITY ENGINEERING DEPARTMENT AT (330)830–1722 TO SCHEDULE.

18. AS BUILT DRAWINGS ARE REQUIRED AND SHALL BE SUBMITTED TO THE CITY OF MASSILLON ENGINEERING DEPARTMENT UPON COMPLETION OF THE PROJECT.
19. CURBS SHALL BE DROPPED FOR HANDICAP RAMPS AT ALL INTERSECTIONS. SEE THE INTERSECTION DETAILS FOR THE GENERAL LOCATION OF THE RAMPS AND SHEET 7 FOR A HANDICAP RAMP DETAIL.
20. THE CONTRACTOR SHALL NOTIFY THE CITY OF MASSILLON FIRE DEPARTMENT, MASSILLON POLICE DEPARTMENT, CITY ENGINEER AND LOCAL (MASSILLON, TUSLAW, JACKSON AND PERRY) SCHOOL DIRECTOR AT LEAST 48 HOURS IN ADVANCE OF ANY STREET CLOSING OR TRAFFIC CHANGE.

SANITARY SEWER NOTES

1. SANITARY SEWERS AND APPURTENANCES SHALL BE CONSTRUCTED ACCORDING TO CITY OF MASSILLON ENGINEERING DEPARTMENT SPECIFICATIONS AND DETAILS IN EFFECT AT TIME OF CONSTRUCTION.
2. ROOF DRAINS, FOUNDATION DRAINS AND OTHER CLEAN WATER CONNECTIONS TO THE SANITARY SEWER ARE PROHIBITED.
3. THE CONTRACTOR SHALL NOTIFY ALL PROPERTY OWNERS ALONG THE ROUTE OF THE SANITARY SEWER AT LEAST THREE (3) DAYS PRIOR TO START OF CONSTRUCTION.
4. THE CONTRACTOR SHALL ALERT THE UTILITIES PROTECTION SERVICE AT LEAST 48 HOURS PRIOR TO START OF CONSTRUCTION.
5. THE CONTRACTOR SHALL BE RESPONSIBLE FOR PROPERLY MAINTAINING EXISTING SANITARY FLOW DURING THE CONSTRUCTION AND TESTING OF THE PROPOSED IMPROVEMENTS. THE CONTRACTOR'S METHODS FOR MAINTAINING FLOW MUST BE APPROVED BY THE CITY OF MASSILLON ENGINEERING DEPARTMENT AT THE PRE–CONSTRUCTION MEETING.
6. ALL ROUGH GRADING TO WITHIN SIX (6) INCHES OF FINISHED GRADE SHALL BE COMPLETED WITHIN THE RIGHT–OF–WAY AND EASEMENTS PRIOR TO SANITARY SEWER CONSTRUCTION.
7. BULKHEADS SHALL BE ERECTED IN EXISTING MANHOLES WHERE TAPS FOR NEW MAINLINE SEWERS ARE MADE AND SHALL REMAIN IN PLACE UNTIL THE NEW SEWERS ARE COMPLETE, TESTED AND APPROVED. IN CASES WHERE A BULKHEAD WOULD INTERRUPT THE FLOW FROM EXISTING SERVICE CONNECTIONS, THE BULKHEAD SHALL BE PLACED IN THE FIRST NEW MANHOLE UPSTREAM OF THE EXISTING MANHOLE.
8. MINIMUM VERTICAL CLEARANCE BETWEEN SANITARY SEWER AND WATER LINE SHALL BE 18 INCHES. MINIMUM HORIZONTAL SEPARATION SHALL BE 10 FEET.
9. SANITARY SEWER SERVICE LATERALS SHALL BE 6–INCH DIAMETER AND BE LAID AT NO LESS THAN 1.0% GRADE.
10. FOR NEW SUBDIVISION CONSTRUCTION, SEWER SERVICE LATERALS SHALL EXTEND 12 FEET INTO EACH LOT WHEN THE MAIN SEWER IS IN A STREET RIGHT–OF–WAY, AND SHALL TERMINATE AT THE EASEMENT LINE WHEN THE MAIN SEWER IS IN AN EASEMENT. FOR OTHER SEWER EXTENSIONS, SEWER SERVICE LATERALS SHALL TERMINATE AT THE RIGHT–OF–WAY LINE OR THE EASEMENT LINE, WHICHEVER IS APPLICABLE.
11. SERVICE STACKS SHALL BE DUCTILE IRON PIPE REGARDLESS OF MAIN SEWER MATERIAL. A CAST IRON TEE SHALL BE INSTALLED IN THE MAIN SEWER. CONCRETE ENCASEMENT WILL NOT BE REQUIRED.
12. MINIMUM COVER OVER SANITARY SEWER SHALL BE 4 FEET.
13. ACCEPTABLE SANITARY SEWER PIPE MATERIALS ARE AS FOLLOWS:

MATERIAL DESCRIPTION	SPECIFICATIONS		
	PIPE	JOINT	INSTALLATION
PVC SMOOTH EXTERIOR:	ASTM D–3034	ASTM D–3212	ASTM D–2321
VCP EXTRA STRENGTH	ASTM C–700	ASTM C–425	ASTM C–12
DCIP (CLASS 52)	AWWA C–151	AWWA C–110/C–111	AWWA C–151

14. ALL SANITARY SEWERS, 8–INCH DIAMETER AND LARGER, MUST PASS AN INTERNAL TELEVISION INSPECTION. THE CONTRACTOR SHALL PROVIDE COMPLETE INTERNAL INSPECTION VIDEOTAPE TO THE CITY OF MASSILLON ENGINEERING DEPARTMENT. THE VIDEOTAPING PROCEDURE SHALL BE IN ACCORDANCE WITH CITY OF MASSILLON ENGINEERING DEPARTMENT SPECIFICATIONS.
15. A DEFLECTION TEST SHALL BE REQUIRED FOR ALL FLEXIBLE PIPE OF 8–INCH DIAMETER AND LARGER. THE TEST SHALL BE CONDUCTED AT LEAST 30 DAYS AFTER COMPLETION OF BACKFILL AND SHALL BE IN ACCORDANCE WITH CITY OF MASSILLON ENGINEERING DEPARTMENT SPECIFICATIONS. THE ALLOWABLE DEFLECTION RATE SHALL NOT EXCEED FIVE (5%) PERCENT. TESTING SHALL BE IN ACCORDANCE WITH ASTM D–3034.
16. ALL SANITARY SEWERS MUST PASS A LOW PRESSURE AIR TEST, WHICH SHALL BE CONDUCTED IN ACCORDANCE WITH ASTM F–1417 (PLASTIC PIPE) OR ASTM C–828 (CLAY PIPE). THE MAXIMUM ALLOWABLE TEST LEAKAGE SHALL BE 100 GAL/INCH OF DIAMETER/MILE/DAY.

SANITARY SEWER NOTES

17. MANHOLE CONSTRUCTION SHALL MEET THE REQUIREMENTS OF ASTM C–478 AND C–443. ALL MANHOLES SHALL BE AIR/VACUUM TESTED IN ACCORDANCE WITH AND MEET ALL THE REQUIREMENTS OF ASTM C–1244.
18. CONNECTIONS TO EXISTING MANHOLES SHALL BE CORE DRILLED, WITH BENCHES AND CHANNELS FORMED AND REPAIRED AS NECESSARY.
19. ANY MANHOLE DROP ATTACHMENTS SHALL BE "OUTSIDE" TYPE.
20. MANHOLE TOP OF CASTING ELEVATIONS MAY REQUIRE ADJUSTMENT DURING SITE GRADING. MANHOLE COVERS MAY NOT BE BURIED. UPON COMPLETION OF CONSTRUCTION AND RESTORATION, ALL MANHOLES, PROPOSED AND EXISTING, SHALL BE IN CONFORMANCE IN ALL RESPECTS WITH CITY OF MASSILLON ENGINEERING DEPARTMENT SPECIFICATIONS AND DETAILS.
21. ALL SANITARY SEWER TRENCHES BENEATH PROPOSED OR EXISTING PAVEMENT SHALL BE COMPACTED IN LIFTS, IN A MANNER, AND WITH MATERIAL AS SPECIFIED BY THE CITY OF MASSILLON ENGINEERING DEPARTMENT AND ALL APPLICABLE O.D.O.T. SPECIFICATIONS.

OHIO E.P.A. NOTES

1. HYDROSTATIC TEST SHALL NOT EXCEED 100 GAL. PER INCH OF PIPE DIAMETER PER MILE PER DAY FOR ANY SECTION OF THE SYSTEM.
2. AIR LEAKAGE TESTING OF PLASTIC SANITARY SEWER SHALL BE PER A.S.T.M. F–1417.
3. MANHOLE AIR/VACUUM TESTING SHALL BE PER A.S.T.M. C–1244.
4. BOOSTER PUMPS ARE NOT PERMITTED ON SERVICE CONNECTIONS.
5. ROOF DRAINS, FOUNDATION DRAINS, AND OTHER CLEAN WATER CONNECTIONS TO THE SANITARY SEWER ARE PROHIBITED.
6. THE PROPOSED FACILITIES MUST MAINTAIN A MINIMUM OF 35 PSI PRESSURE DELIVERED TO THE CURB STOP DURING NORMAL OPERATING CONDITIONS.

WATER MAIN CONSTRUCTION NOTES – AQUA OHIO

1. CONTRACTOR MUST MAINTAIN A 12" MINIMUM VERTICAL CLEARANCE FROM EDGE OF ALL WATER MAIN PIPE TO EDGE OF ALL PROPOSED STORM SEWERS AND/OR INLET LEAD PIPE WHERE THEY CROSS.
2. CONTRACTOR MUST MAINTAIN A 4.0' MINIMUM HORIZONTAL CLEARANCE FROM EDGE OF WATER MAIN PIPE TO EDGE OF STORM SEWER PIPE INLETS AND STORM SEWER MANHOLES.
3. CONTRACTOR MUST MAINTAIN A 10.0' MINIMUM HORIZONTAL CLEARANCE FROM EDGE OF WATER MAIN PIPE TO EDGE OF SANITARY SEWER AND/OR FORCE MAIN PIPE.
4. CONTRACTOR MUST MAINTAIN A 18" MINIMUM VERTICAL CLEARANCE FROM EDGE OF ALL WATER MAIN PIPE/AND OR SERVICE TO OUTSIDE EDGE OF ALL SANITARY SEWER PIPE WHERE THEY CROSS.
5. THE GROUND OVER THE WATER MAIN LINE SHALL REMAIN FREE OF TRASH CONTAINERS, TREES, SHRUBS AND ALL OTHER VEGETATION (EXCLUDING GRASS). MOUNDING OF EARTH OVER THE WATER LINE FOR AESTHETIC PURPOSES IS PROHIBITED.
6. WHERE WATER MAINS CROSS SEWER TRENCHES, THE TRENCH IS TO BE BACKFILLED WITH APPROVED GRANULAR MATERIAL.
7. ALL WATERLINES AND APPURTENANCES SHALL BE CONSTRUCTED IN ACCORDANCE WITH THE STANDARDS AND SPECIFICATIONS ESTABLISHED BY THE AQUA OHIO WATER COMPANY. PIPE SHALL BE CLASS 350, CEMENT–LINED, DUCTILE IRON WITH PUSH ON JOINTS, EXCEPT AS NOTED. ALL FITTINGS SHALL BE CEMENT–LINED MECHANICAL JOINT TYPE. VALVES SHALL BE MECHANICAL JOINT, NON–RISING STEM, RIGHT OPEN (CLOCKWISE) WITH 2–INCH SQUARE OPERATING NUT. POURED CONCRETE THRUST BLOCKS MUST BE CONSTRUCTED WHERE NECESSARY. ALL VALVES 4" THRU 12" ARE GATE VALVES AND MUST HAVE BOXES.
8. COMPACTED PREMIUM BACKFILL IS REQUIRED FOR UNDERGROUND CONSTRUCTION UNDER OR WITHIN 3 FEET OF ANY PROPOSED OR EXISTING SIDEWALK OR PAVEMENT.
9. ANY EXISTING WATER APPURTENANCES THAT ARE DAMAGED MUST BE REPLACED AT THE CONTRACTOR'S EXPENSE.
10. THE CONTRACTOR SHALL SUPPLY A TEMPORARY SAFE WATER SERVICE TO ANY HOME THAT WILL HAVE ITS WATER SERVICE INTERRUPTED BY THIS CONSTRUCTION.
11. NO TAPS FOR WATER SERVICES SHALL BE MADE UNTIL AFTER THE MAIN LINE HAS BEEN TESTED AND STERILIZED.
12. ALL WATER MAIN CONSTRUCTION SHALL BE INSPECTED BY THE AQUA OHIO WATER COMPANY. NOTIFY THE AQUA OHIO WATER COMPANY AT LEAST 48 HOURS PRIOR TO BEGINNING WATERLINE CONSTRUCTION.
13. ALL NEW WATER MAINS ARE TO BE COMPLETELY WRAPPED WITH POLYETHYLENE ENCASEMENT AS SPECIFIED IN AWWA C–105.
14. PRIOR TO ACCEPTANCE THE WATERLINE SHALL BE PRESSURE TESTED IN ACCORDANCE WITH AWWA C–600, LATEST EDITION, AND DISINFECTED IN ACCORDANCE WITH AWWA C–651, LATEST EDITION, BY THE CONTRACTOR.
15. ALL HYDRANTS SHALL HAVE STANDARD THREADS ON ALL HOSE CONNECTIONS.
16. MUST MAINTAIN A 36" MINIMUM HORIZONTAL CLEARANCE FROM THE EDGE OF ALL WATER MAIN PIPE TO THE EDGE OF DIRECT BURIAL CONDUIT, CONCRETE ENCASED ELECTRICAL CONDUIT, THE LIGHT POLE BASES, AND THE HAND HOLE PULL BOXES.
17. MUST MAINTAIN A 12" MINIMUM VERTICAL CLEARANCE FROM EDGE OF ALL WATER MAIN PIPE TO THE EDGE OF THE DIRECT BURIAL CONDUIT AND THE EDGE OF THE CONCRETE ENCASED ELECTRICAL CONDUIT WHERE THEY CROSS.
18. USE EXTREME CAUTION WHEN EXCAVATING IN THE AREA OF EXISTING WATER MAIN PIPES, VALVES OR HYDRANTS.
19. ALL 2 INCH PIPE AND FITTINGS AROUND CUL–DE–SACS ARE TO BE HDPE TUBING WITH TRACER WIRE AND MARKING TAPE INSTALLED WITH 4 FEET 6 INCHES OF COVER.
20. SERVICES OFF OF 2" TEES AT CUL–DE–SACS MAY BE SPLIT TO SERVICE TWO UNITS, WITH INDIVIDUAL CURB STOPS, INSTALLED BY THE CONTRACTOR.
21. BLOW–OFF ASSEMBLIES TO BE KUPFERLE FOUNDRY TF500 WITH VALVE BOX. INSTALL 2" CURB STOP WITH BOX AHEAD OF EACH BLOW OFF.
22. ALL PIPE JOINTS WITHIN 40 L.F. OF ANY DEAD END SHALL BE RESTRAINED BY USING FIELD LOCK GASKETS, MECHANICAL JOINTS, MEGALUG OR APPROVED EQUAL. ALL PIPE JOINTS WITHIN 40 L.F. OF ANY BEND, FITTING, VALVE AND/OR TEE SHALL ALSO BE RESTRAINED USING RESTRAINED MECHANICAL JOINTS, MEGALUG OR APPROVED EQUAL. IN ADDITION, POURED–IN–PLACE CONCRETE THRUST BLOCKS SHALL BE PROVIDED AT ALL BENDS, TEES, ETC. TO PREVENT MOVEMENT OF THE WATERLINE. BLOCKING SHALL BE CAREFULLY PLACED TO ENSURE IT IS POSITIONED PROPERLY TO WITHSTAND THE RESULTANT FORCES AT EACH BEND, FITTING, ETC., AND SHALL BEAR ON STABLE UNDISTURBED GROUND CAPABLE OF WITHSTANDING THE POTENTIAL LOADING.

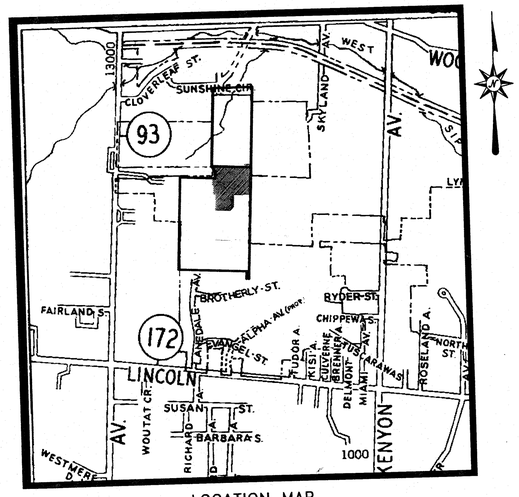

LOCATION MAP
Not to scale

DRAWING LIST

SHT. NO.	DESCRIPTION
1	TITLE SHEET
2	OVERALL PROJECT PLAN
3	SITE AND UTILITY PLAN
4	GRADING AND S.W.P.P. PLAN
5–6	S.W.P.P. NOTES AND DETAILS
7	TYPICAL SECTION AND INTERSECTION DETAILS
8	PLAN & PROFILE – WOODSTONE AVENUE N.W.
9	PLAN & PROFILE – MILLRACE STREET N.W.
10	PLAN & PROFILE – ALPHA STREET N.W. & STORM LINE "E"
11	PLAN & PROFILE – STORM LINE "F"
12	AQUA OHIO WATER, HEADWALL DETAILS & COST ESTIMATE
13–14	CITY OF MASSILLON DETAILS & MISCELLANEOUS DETAILS
15–18	CROSS–SECTIONS

UTILITY OWNERS / CONTACTS

AMERITECH
50 W. BOWERY, 6TH FLOOR
AKRON, OH 44308
(800) 290–2242
CONTACT: RICK MARSILI

A.T.&T. COMMUNICATIONS
2535 E. 40TH AVE.
DENVER, CO 80205–3601
(800) 852–3786

AQUA OHIO WATER CO.
870 THIRD ST., N.W.
MASSILLON, OH 44647
(330) 832–5764, EXT. 205
CONTACT: DON SNYDER

DOMINION EAST OHIO GAS CO.
4725 SOUTHWAY ST., S.W.
CANTON, OH 44706
(330) 478–3142
CONTACT: NANCY KOVACH

CITY OF MASSILLON ENGINEER
151 LINCOLN WAY, E.
MASSILLON, OH 44646
(330) 830–1722
CONTACT: JASON HAINES

MASSILLON CABLE TV
P.O. BOX 814
MASSILLON, OH 44648–0814
(330) 833–4134

NORTH COAST ENERGY, INC.
P.O. BOX 1478
5748 GLENN HWY.
CAMBRIDGE, OH 43725
(740) 432–7359
CONTACT: JEFF MURRAY

OHIO EDISON
STARK DIVISION
2600 S. ERIE ST.
MASSILLON, OH 44645
(330) 833–3141

OWNER/DEVELOPER/CONTRACTOR

LOCKHART DEVELOPMENT COMPANY
800 WEST WATERLOO ROAD
AKRON, OHIO 44314
PH: (330) 745–6520
FAX: (330) 745–5711

DESIGN ENGINEER

THESE PLANS HAVE BEEN PREPARED FOR LOCKHART DEVELOPMENT COMPANY BY:

STATE OF OHIO
JEFFREY S. SMITH
E-64042
REGISTERED
PROFESSIONAL ENGINEER

4/3/07
DATE

JEFFREY S. SMITH, P.E.
Reg. Engineer No. E–64042
(c/o LOCKHART DEVELOPMENT CO.)

APPROVAL – CITY OF MASSILLON ENGINEER

4/16/07
MASSILLON ENGINEER DATE

APPROVAL – AQUA OHIO WATER

WATER SYSTEM EXTENSION APPROVED BY THE AQUA OHIO WATER BY:

DONALD L. SNYDER, CONSTRUCTION SUPERVISOR DATE

APPROVALS – OHIO E.P.A.

SANITARY SEWER PERMIT TO INSTALL (P.T.I.) HAS BEEN RECEIVED FROM THE OHIO ENVIRONMENTAL PROTECTION AGENCY

ON THE _____ DAY OF _____, 20____. (P.T.I. #)

WATER LINE PERMIT TO INSTALL (P.T.I.) HAS BEEN RECEIVED FROM THE OHIO ENVIRONMENTAL PROTECTION AGENCY

ON THE _____ DAY OF _____, 20____. (P.T.I. #)

ENGINEER'S ESTIMATE

TOTAL ROADWAY	2150 L.F.
TOTAL SANITARY SEWER	1033 L.F.
TOTAL STORM SEWER	2241 L.F.
TOTAL WATER MAIN	2150 L.F.

THE OIL AND GAS PRODUCERS UNDERGROUND PROTECTION SERVICE
P.O. BOX 206
GRANVILLE, OHIO 43023–0206
PHONE (614) 587–0486 OR
CALL TOLL FREE 800–925–0988

2 WORKING DAYS
BEFORE YOU DIG
CALL TOLL FREE: 800–362–2764
OHIO UTILITIES PROTECTION SERVICE

4/1/07

{CURRENT JOBS\WESTBROOK\PHASEIII\WB03–TITLE.DWG}

4/1/07

D. Jr. & J. Brenner
49.76 Acres
2133/567

D. & J.
Wisshar
12.7 Acres
3832/464

T.&D.Thomas
1.507 Acres
4177/246

J. & D. Glick
15.496 Acres
3956/848

J. & D. Glick
25.38 Acres
3956/848

E & T Gardner
8.33 Acres
3596/438

M. Morsheiser
30.0 Acres
4177/866

TUSCLAW H
ALLOTMENT
P.B.35/P

R. & T. Bleig
9.678 Acres
103/947

Jacob & Dorothy E. Glick
3446/552

J. Princehorn
87.29 Acres
1494/191

R. Shearer
8.382 Acres
1705/113

T. Lafferty
10.00 Acres
1705/113,131

Mary E. Smeyres
36.593 ACRES

Plat of Survey
6.869 Acres
Ron Smith P.S.5324

OUT LOT 934
RICHARD G. ROHRER
INSTR. No. 200504040020551
2.127 Ac.

OUT LOT 783
RICHARD G. ROHRER
INSTRUMENT No. 200504040020551
35.845 Ac.

OUT LOT 782
ALEXANDER R. LOCKHART, ET AL
INSTRUMENT No. 199706263
33.943 AC.

PHASE IA

PHASE II

PHASE III

FUTURE ALLOTMENT

FUT. PHASE IV

FUT. PHASE V

LANDMARK STREET N.W. 60'

WOODSTONE AVE. N.W. 60'

MILLRACE STREET N.W. 80'

ALPHA ST. N.W. 80'

WOODSTONE AVE. N.W. 60'

West Sippo Creek

0' 120' 240' 360'
SCALE: 1" = 120'

No.	DATE	REVISION	BY
3			
2			
1	4/1/07	REV. PER CITY COMMENTS	JSS

DATE: JULY, 2005
SCALE: H: 1" = 120'
SCALE: V:
DESIGNER: J.S.S.
DRAFTER: J.S.S.

WESTBROOK ESTATES
PHASE III
CITY OF MASSILLON
COUNTY OF STARK, STATE OF OHIO

PROJECT NUMBER

A. R. LOCKHART DEVELOPMENT CO.
800 W. WATERLOO RD AKRON, OH 44314
Ph: 330-745-6520 Fax: 330-745-0716

[CURRENT JOBS\WESTBROOK\PHASE III\W803-SITE.DWG]

OVERALL PROJECT SITE PLAN

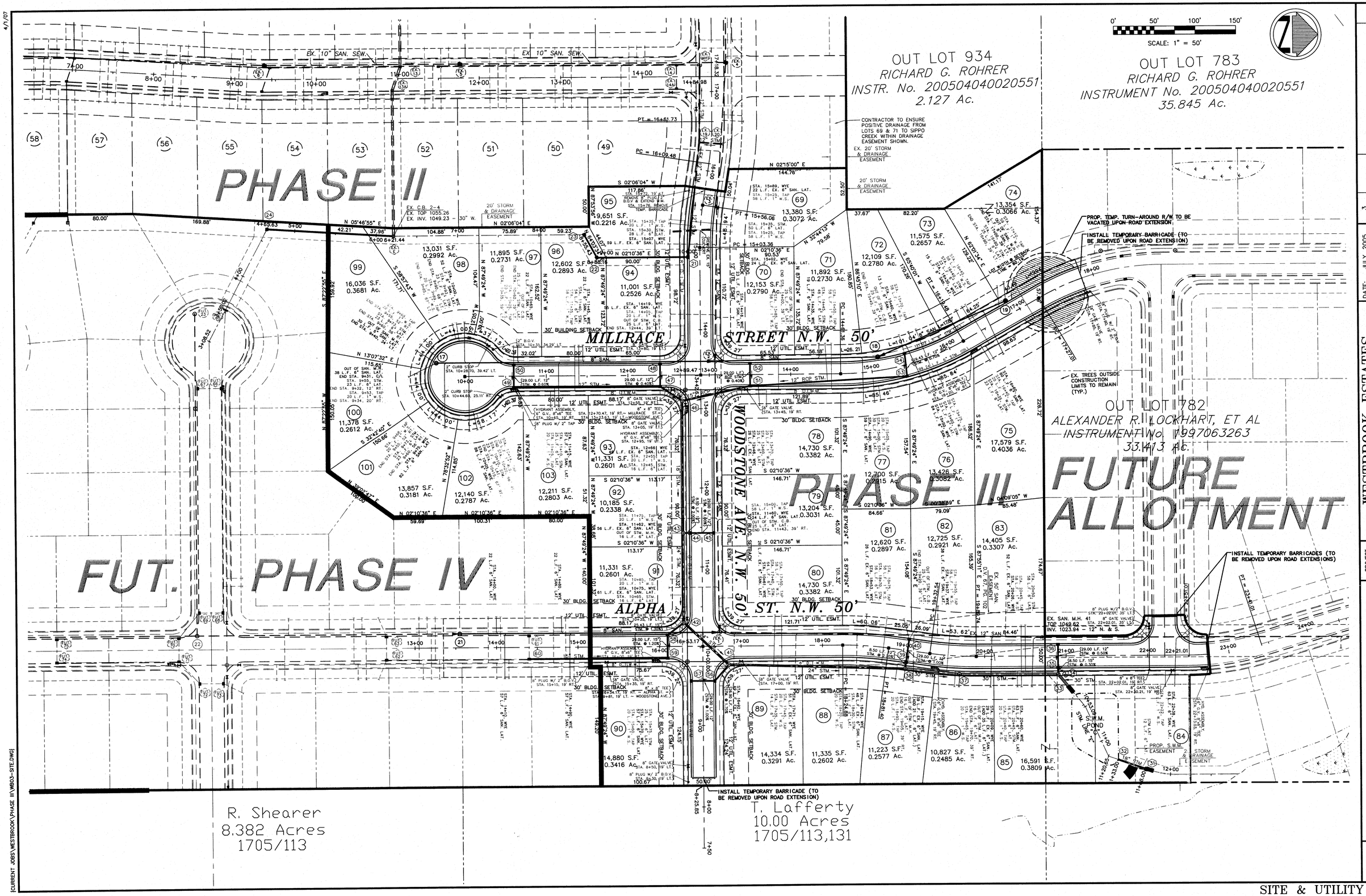

No.	DATE	REVISION	BY
3			
2	4/1/07	REV. PER CITY COMMENTS	JSS
1			

DATE: JULY, 2005
SCALE, H: 1" = 50'
SCALE, V:
DESIGNER: J.S.S.
DRAFTER: J.S.S.

WESTBROOK ESTATES
PHASE III
CITY OF MASSILLON
COUNTY OF STARK, STATE OF OHIO

PROJECT NUMBER

A. R. LOCKHART DEVELOPMENT CO.
800 W. WATERLOO RD AKRON, OH 44314
Ph: 330-745-6520 Fax: 330-745-0716

SITE & UTILITY PLAN

4/1/07

[CURRENT JOBS\WESTBROOK\PHASE III\WB03-SITE.DWG]

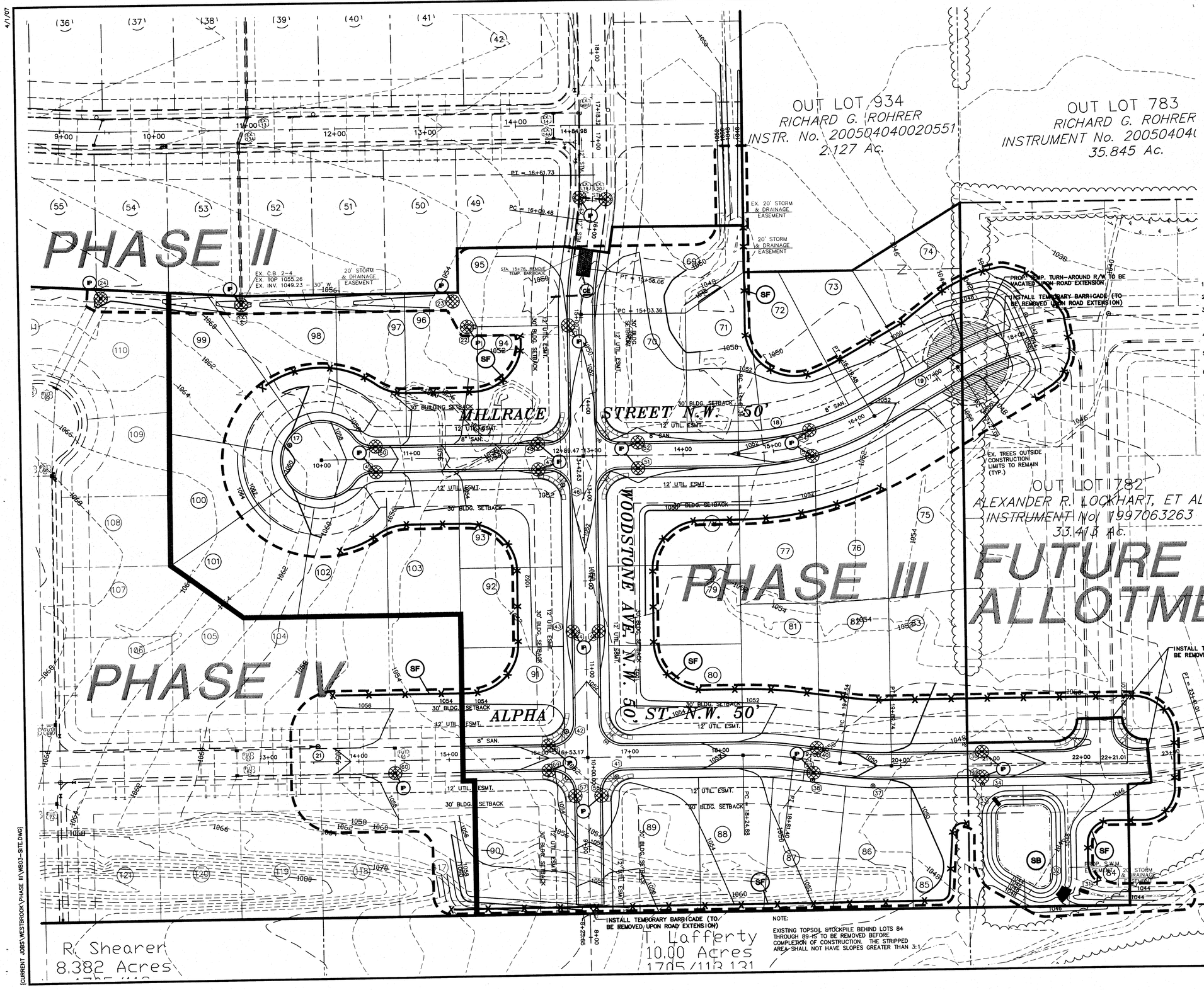

NOTE:

EXISTING TOPSOIL STOCKPILE BEHIND LOTS 84 THROUGH 89 IS TO BE REMOVED BEFORE COMPLETION OF CONSTRUCTION. THE STRIPPED AREA SHALL NOT HAVE SLOPES GREATER THAN 3:1

0' 50' 100' 150'

SCALE: 1" = 50'

LEGEND

- (CE) - CONSTRUCTION ENTRANCE
- (DD) - TEMPORARY DIVERSION DIKE
- (IP) - INLET PROTECTION
- (SF) - SILT FENCE
- (SB) - SEDIMENT BASIN
- (ST) - SEDIMENT TRAP

EROSION CONTROL NOTES

1. THIS PLAN IS IN CONFORMANCE WITH LOCAL WASTE DISPOSAL, SANITARY AND HEALTH REGULATIONS.
2. DUMPED ROCK CHANNEL PROTECTION IS TO BE PLACED AS PER PLAN.
3. INSTALL GEOFAB OR EQUAL FABRIC FENCE AS SHOWN, 3.5' IN HEIGHT, AS PER MANUFACTURER'S RECOMMENDATIONS. THIS FABRIC FENCE WILL BE USED DURING GRADING OPERATIONS AND UNTIL ALL BARE AREAS ARE STABILIZED.
4. ALL AREAS LEFT BARE DUE TO CONSTRUCTION AND ARE NOT DISTURBED FOR 14 DAYS SHALL BE SEEDED.
5. TEMPORARY SEEDING OF ENTIRE SITE SHALL OCCUR BY NOVEMBER 1st, UNLESS THE SITE CAN BE FINAL SEEDED BY NOVEMBER 15th.
6. SEDIMENT PONDS/TRAPS AND PERIMETER CONTROL SHALL BE IMPLEMENTED AS A FIRST STEP OF GRADING AND WITHIN 7 DAYS FROM THE START OF GRUBBING AND SHALL CONTINUE TO FUNCTION UNTIL UPLAND AREAS ARE STABILIZED.
7. DISTURBED AREAS WHICH WILL REMAIN UNWORKED FOR A PERIOD OF 45 DAYS OR MORE, SHALL BE STABILIZED WITH SEEDING AND MULCHING OR OTHER APPROPRIATE MEANS WITHIN 7 DAYS.
8. EROSION CONTROL BLANKETS WITH MATTING WILL BE USED ON DITCHES GREATER THAN 1.5% AND ALL OTHER SLOPES GREATER THAN 6% GRADE.
9. BUILDER IS RESPONSIBLE FOR EROSION CONTROL ON EACH INDIVIDUAL LOT. BUILDER MUST FILE AN INDIVIDUAL LOT NOTICE OF INTENT (NOI) WITH OHIO E.P.A.
10. NO SOLID OR LIQUID WASTE SHALL BE DISCHARGED INTO STORM WATER RUNOFF.
11. OFF-SITE SEDIMENT TRACKING SHALL BE MINIMIZED. CONSTRUCTION VEHICLES ARE LIMITED TO THE CONSTRUCTION ACCESS ROAD(S) NOTED ON THE PLAN.
12. ALL EROSION AND SEDIMENT CONTROL PRACTICES MUST MEET THE STANDARDS AND SPECIFICATIONS OF THE OHIO RAINWATER AND LAND DEVELOPMENT HANDBOOK (1998).
13. OTHER EROSION CONTROL ITEMS MAY BE NECESSARY DUE TO ENVIRONMENTAL CONDITIONS.
14. REGULAR INSPECTION AND MAINTENANCE WILL BE PROVIDED FOR ALL EROSION AND SEDIMENT CONTROL PRACTICES. PERMANENT RECORDS OF MAINTENANCE AND INSPECTIONS MUST BE KEPT THROUGHOUTCONSTRUCTION PERIOD. INSPECTIONS MUST BE MADE A MINIMUM OF ONCE EVERY 7 DAYS AND IMMEDIATELY AFTER STORM EVENTS GREATER THAN 0.5 INCHES OF RAIN IN A 24-HOUR PROVIDE THE NAME OF THE INSPECTOR, MAJOR OBSERVATIONS, DATE OF INSPECTION AND ANY CORRECTIVE MEASURES TAKEN.

No.	REVISION	DATE	BY
3			
2			
1			

DATE: JULY, 2005
SCALE, H: 1" = 50'
SCALE, V:
DESIGNER: J.S.S.
DRAFTER: J.S.S.

WESTBROOK ESTATES
PHASE III
CITY OF MASSILLON
COUNTY OF STARK, STATE OF OHIO

PROJECT NUMBER

A. R. LOCKHART DEVELOPMENT CO.
800 W. WATERLOO RD AKRON, OH 44314
Ph: 330-745-6520 Fax: 330-745-0716

A.R.L.

GRADING & S.W.P.P. PLAN

4/1/07

{CURRENT JOBS\WESTBROOK\PHASE III\WB03-SITE.DWG}

GENERAL NOTES FOR EROSION AND SEDIMENTATION CONTROL MEASURES

1. Soil stabilization measures shall include temporary and/or permanent seeding, sodding, mulching, riprap and grading.
2. Runoff control measures shall include: diversions, waterways, subsurface drainage, structures and outlet protection.
3. Sediment control measures shall include sediment basins, construction road stablization, straw bale barrier, silt fences, storm drain inlet protection, land grading and vegetation filters.

I. SOIL STABILIZATION

Temporary Seeding and Mulching

Temporary seeding shall be done on disturbed areas within 7 working days where additional work is not scheduled for a period of three weeks to less than a year. Lime on acid soil shall be applied at the rate of 100 pounds per 1000 SF. using agricultural ground limestone. Fertilizer shall be applied at the rate of 12–15 pounds per 1000 SF. of 10–10–10 or 12–12–12 analysis or equivalent. Both shall be worked into the soil with a harrow to a depth of two (2) inches. Seeding species shall be selected from the following according to season of the year and applied at the rate shown.

March 1 – Aug. 15:	Oats	3 lb. per 1000 SF.
	Perennial Ryegrass	1 lb. per 1000 SF.
	Tall Fescue	1 lb. per 1000 SF.
Aug. 16 – Nov. 1:	Rye	3 lb. per 1000 SF.
	Wheat	3 lb. per 1000 SF.
	Perennial Ryegrass	1 lb. per 1000 SF.
	Tall Fescue	1 lb. per 1000 SF.

Seed shall be applied uniformly on a firm, moist seedbed. Wheat or rye no deeper than one inch. Ryegrass no deeper than 1/4 inch. When feasible, seedbed shall be firmed following seeding operation.

Temporary mulching will be applied uniformly and shall consist of small grain straw (wheat or rye) and shall be applied at the rate of 100 lbs. per 1000 SF. Anchoring methods can be mechanical; asphalt emulsion, applied at the rate of 160 gal. per acre; or by mulch nettings.

All temporary seeding shall be watered as necessary until such time as the plant growth is firmly established.

Permanent Seeding and Mulching

Permanent seeding shall be done on disturbed areas within 7 working days of finish grading where long lived vegetation cover is needed to stabilize the soil and in rough graded areas which will not be final graded for several months or more.

Soil material should consist of 25% silt and clay. Where compacted soils occur, they shall be broken up to a depth of 6–8 inches to create favorable rooting. Final grading, topsoil application and all erosion control devices shall be in place and lime and fertilizer shall be worked into the soil to a depth of three inches before permanent seeding is done. On sloping land this final operation shall be on the contour. (Note: lime and fertilizer shall be applied at the same rate as for temporary seeding.)

Seeding species shall be selected from the following according to the season and the site and shall be applied at the rate shown: (Other seed species may by substituted with the approval of the Engineer.)

Dates	Seed and/or Mixture	Per 1000 SF.
March – May	a) Creeping Red Fescue,	1/2 lb.*
Aug. – Sept.	Domestic Ryegrass+	1/4 lb.
(* For lawns	Kentucky Bluegrass	1/4 lb.
increases	b) Tall Fescue	1 lb.*
2–3 times)	c) Dwarf (turf type) fescue	1 lb.*

For steep banks or cut the following is recommended:

March – May	d) Tall Fescue	1 lb.
August	e) Crownvetch	1/4 lb.
	& Tall fescue	1/2 lb.
	f) Flatpea +	1/2 lb.
	Tall Fescue	1/2 lb.

For waterways and road ditches the following is recommended:

March – May	g) Tall Fescue	1 lb.
Aug. – Sept.		

For dormant seeding from November 20 through March 15, prepare as permanent for seeding increasing the seeding rates by 50%.

Mulching for permanent and dormant seeding shall be applied uniformly and shall consist of small grain straw (wheat or rye) applied at the rate of 100 lbs. per 1000 SF. Anchoring methods can be mechanical; asphalt emulsion, applied at the rate of 160 gal. per acre; or by mulch nettings.

Maintenance of permanent and dormant seeding areas shall consist of watering as necessary, repair (if inadequate, overseed and fertilize using half of original rate and mulch, if over 60% damaged re-establish as originally prepared), fertilizing and mowing.

Fertilizer Rate	Formula	Rate	Time	Mow
For: a)	10–10–10	12 lb. per 1000 S.F.	Fall/yearly	3"
b & d)	10–10–10	12 lb. per 1000 S.F.	Fall/yearly	4"
c)	10–10–10	12 lb. per 1000 S.F.	Fall/yearly	2"
e & f)	0–20–20	10 lb. per 1000 S.F.	Spring/yearly	Do not

Sodding

Sodding shall be used when it is necessary to establish permanent turf immediately as for waterways with intermittent flow, drop inlets in grassed swales and residential or commercial lawns for aesthetic purposes.

The site shall be prepared as if for permanent seeding. Lime on acid soil shall be applied at the rate of 100 lbs. per 1000 SF. using agricultural ground limestone. Fertilizer shall be applied at the rate of 25 lbs. per 1000 SF. of 10–10–10 or 12–12–12 analysis. Both shall be worked into the soil with a harrow to a depth of 3 inches.

The sod shall be cut with smooth, clean edges and square ends and a uniform thickness of not less than 3/4 inch measured from the crown of the plants to the bottom of the sod strips. Bluegrass shall be cut to a thickness of not less than 1 1/2 inches. The sod shall be mowed to not less than 2 inches nor more 4 inches and shall be kept moist and covered until placement. No sod shall be placed when the temperature is below 32° F, nor shall frozen sod be placed, or sod be placed on frozen soil. When placed during June thru September and December thru February, it shall be uniformly covered immediately with approximately 1/2 inch of straw mulch. Sod shall be placed continuously with joints staggered. On steep channels the sod shall be staked using wood stakes 1/2"x3/4"x12". They shall be driven flush with the top of the sod with the flat side against the slope. Where sodding does not establish, failure should be ascertained, corrected and resodded preparing the area as before.

Ground Cover

Ground cover shall be used where vegetation other than turf is preferred, on steep or rocky slopes, where ornamentals are desirable, where turf maintenance is difficult, for soil conservation or to establish wildlife habitat.

Planting should be done in early spring to May 1st for bare root stock. Potted stock may be planted later. For short slopes and/or small areas a 5–10–10 fertilizer with an organic supplement, applied at the rate of 30–50 lbs. per 1000 SF. and worked into the soil to a depth of 4–6 inches. For steep slopes and/or larger areas, center hole planting is recommended. Each plant shall be fertilized with 1 oz. of 10–10–10 and organic material as needed. Mulch shall be added to the entire area. In severe areas, jute or fiberglass matting may be required. Unless a controlled release fertilizer was used at the time of planting, the area shall be fertilized with 5–10–10 at the rate of 2–3 lbs. per 100 SF. in the spring of the second growing season.

Trees and Shrubs

Bare root seedlings shall be planted only while dormant in spring. They shall be planted vertically and slightly deeper than originally taking care not to bend the main root. For balled or container grown trees (deciduous), spring planting is preferred, for evergreens fall is preferred. The soil ball should be 12 inches in diameter for each inch diameter of the trunk, wrapped in burlap and kept moist until planting. Each tree shall be supported with stakes or guy wires, thoroughly watered and mulched. Depending upon rainfall, trees and shrubs shall receive water once a week. Fertilizer shall be added within a year using a 10–8–6 or 10–6–4 at a rate of 2 lbs. per inch of trunk diameter measured 4 feet from the ground. For evergreen use 1/2 the amount of chemical fertilizer or use only organic fertilizers. Fertilize in late fall or early spring before leaf coverage.

Mulching, Permanent and Temporary

Mulching shall be done as required previously using one of the four categories listed.

1. Organic – Hay or straw, corn stalks, wood chips or shredded bark.
2. Synthetic– Emulsions or dispersion of vinyl compounds ,asphalt, rubber, etc. mixed with water.
3. Jute or vinyl matting.
4. Gravel or crushed stone.

	Rate	Notes
1. Organic		(T) Temporary (P) Permanent
A) Straw (T)	90 lb./1000 SF.	Free from weeds. Must be anchored.
B) Wood chips (T or P)	9–10 yd./1000 SF.	3" deep, treat w/ 12 lb. nitrogen/ton. Do not use in firm turf area.
C) Bark chips or shredded Bark (T)	1 1/2–2 yds./1000 SF.	1/2" deep. Do not use in fine turf area.
D) Gravel or crushed stone (P)	9–10 yd./1000 SF.	3" deep.

Mulch may be anchored by use of an anchoring tool designed to punch mulch approximately 2 inches into the soil surface, with a liquid binder, with mulch nettings or with peg and twine.

2. Chemical mulches may be used alone when no other material is available, to bind other mulches, or with wood fiber in a slurry at any time. Manufacturer's recommendations for application shall be followed.
3. Nets may be used on level areas, on slopes no steeper than 3:1, in waterways and over organic mulch except for wood fiber. Wood fiber may be sprayed on top of net. Excelsior blankets are considered protective mulches and may be used alone at all time of year. Staples will be No. 8 gauge or heavier plain iron wire and 8 inches in length. Net shall be stapled every 12 inches across–the top, at 3 foot intervals down the center and at the edges. Adjacent edges shall be overlapped 3 inches. When joining strips overlap the end of the previous roll 18 inches, turn under 6 inches and staple across every 12 inches. After installation, net shall be rolled.

Riprap

Riprap shall be used as designated to protect soil from erosion, to slow runoff velocity or to stabilize slopes. Riprap shall conform to ODOT material specifications for graded riprap by diameter and weight. Filter blankets may be a gravel layer or a plastic filter cloth. Filter blankets shall be required at storm drain outlets. Filter blanket edges shall overlap at least 12 inches and be anchored with 15 inch long pins every 3 feet. Upper and lower end shall be buried 12 inches.

Construction Road Stabilization and Grading

Construction road stabilization and grading shall be done in compliance with these plans, ODOT Specifications and any local standards and specifications governing the area within the boundaries of this project.

II. Runoff Control

Diversions

A diversion is an earthen channel with a supporting ridge on the lower side constructed across the slope that shall be used to divert runoff to a stabilized outlet, to a sediment basin, or to shorten the flow length. All permanent diversion ridges and channels are to be seeded to prevent erosion. See details for example.

Waterways

Waterways will be a natural or constructed waterway or outlet established to dispose of runoff without causing erosion. The preferred cross section is parabolic; however, trapezoidal or triangular are acceptable (see details). Grade and depth shall be as shown on the plans. Filter strips/sedimentation control shall be provided when sediment is is not controlled before it reaches the waterway. Waterway lining may be done by: sodding, concrete, riprap or flagstone.

Subsurface Drainage

Subsurface drainage shall consist of perforated conduits installed to intercept and convey ground water. Size and type of conduit shall be as specified in the plans with 3 inches being minimum. Minimum depth is 24 inches, preferred is 36 inches and spaced at 50 ft. intervals. See 'Ohio Drainage Guide'.

Pipe Structures

Pipe structures shall be as shown on the plans and shall conform to ODOT Materials and Specifications and local standards and specifications governing the area within the boundaries of this project. See Details.

Outlet Protection

Outlet protection shall be shown on the plans and shall conform to ODOT Materials and Specifications and local standards and specifications governing the area within the boundaries of this project. See Details.

III. SEDIMENT CONTROL

Sediment Basins

A sediment basin is a temporary barrier across a watercourse to retain sediment. Height shall be 25 feet or less with a total storage volume of 150 acre feet, a drainage area of 100 acres or less shall be removed within three years after construction. A construction permit is required from the Division of Water, Ohio Department of Natural Resources if the height of the dam is 10 feet or greater. Should it be desirable for a sediment basin to become a storm water retention basin, it must be constructed as such. Spillway pipe design for Class 1 dams will be sufficient to pass the runoff of a 10 year, 24 hour, storm the minimum top width shall be 10 feet, the upstream slope no steeper than 2:1 and the downstream slope 5:1. For Class 2 and 3 dams, pipe design shall be for 2 year, 24 hour storm, a minimum top width of 10 feet and side slopes no steeper than 2.5:1. Where basins are accessible to the public, they should be fenced and posted.

Silt Fence/Filter Barrier

A silt fence consists of a synthetic filter fabric, posts, with or without wire fence for support. Fabric shall have a standard tensile strength of 30 lbs./lin. inch. (minimum) and shall be a pervious sheet of propylene, nylon polyester or ethylene yarn. Posts shall be 4 inch diameter wood or 1.33 lb./lin. ft. steel, 5 feet long. Steel posts shall have projections for fastening wire. Wire fence reinforcement shall be a minimum of 42 inches high, 14 gauge and maximum mesh spacing of 6 inches. Maximum height of a silt fence shall be 36 inches with posts spaced at 10 feet apart and driven a minimum of 12 inches into the ground. See Details.

A filter barrier consists of stakes and burlap or synthetic filter fabric. Fabric may be the same as for a filter fence or burlap of 10 oz. per Sq.Yd. Stakes shall be 1"x2" wood and a minimum length of 3 feet. Minimum height shall be 15 inches and shall not exceed 18 inches. Stakes shall be a maximum of 3 feet apart and set a minimum of 8 inches into the ground. See Details.

Storm Drain Inlet Protection

Where storm drain inlets are made operational before permanent stabilization is complete, a sediment filter using strips of sod or gravel and wire mesh shall be utilized. See Details.

Filter Strip

Shall be an area of vegetation a minimum of 15 feet wide by 100 feet long and shall be used to reduce sediment damage from sheet flow to adjacent property.

Seeding	Rate/Acre	Wet	Well Drained
a) Alfalfa or *	10 lb.		X
Red Clover +	10 lb.		
Timothy or	4 lb.		
Orchardgrass or	6 lb.		
Bromegrass	6 lb.		
b) Ladino Clover *	1/2 lb.	X	X
+ Timothy or	4 lb.		
Orchardgrass or	6 lb.		
Bromegrass	8 lb.		
c) Tall Fescue	40 lb.	X	X
d) Reed Canarygrass	15 lb.	X	X
+ Tall Fescue	10 lb.		

* Recommend for wildlife habitat.

Streambank Stabilization

Where vegetation is used to stabilize stream banks, trees and brush that will affect desirable growth will be removed, debris cleared and overhanging bank edges cut back to 2:1 or flatter. The seedbed shall be raked and fertilized with 15–15–15 at the rate of 24 lb. per 1000 SF. Seed with Tall Fescue at a rate of 1 lb. per 1000 SF. and mulch at a rate of 90 lb. per 1000 SF. Shrubs shall be either "Streamco" Purpleosier or "Bankers" Willow, using either 1 year old nursery stock or first cuttings. Nursery stock will be planted at the same depth as originally and cuttings shall be 3/8" to 1/2" thick and 12 to 18 inches long. For streamberm seeding mixtures, see "Water Management and Sediment Control for Urbanizing Areas".

When structures are necessary to protect streambanks from erosion, the following methods may be used.

Riprap	– See pervious note.
Gabions	– Rectangular rock filled wire baskets, designed and installed in accordance with manufacturer's standards and specifications. See Details.
Deflections (groins or jetties)	– Barriers projecting into stream to divert flow from eroding section.
Reinforced concrete	– Retaining walls or bulkheads with positive drainage.
Log cribbing	– Retaining wall of logs.
Grid Pavers	– Modular concrete units. Design and installation to be in accordance with manufacturers instructions. See Details.

Temporary Stream Crossing

Where culverts are installed to provide a temporary stream crossing, the pipes shall be large enough to convey a 2 year storm without altering the stream flow. Minimum size pipe shall be 18". Compacted soil covering the pipes shall be equal to 1/2 the diameter of the pipes or 12 inches whichever is greater. The compacted fill shall have a 6" minimum cover of ODOT No. 1 stone and the minimum approved length shall be 25 feet. The structure shall be removed when it is no longer necessary for project constrution and the stream return to its original condition. See Details.

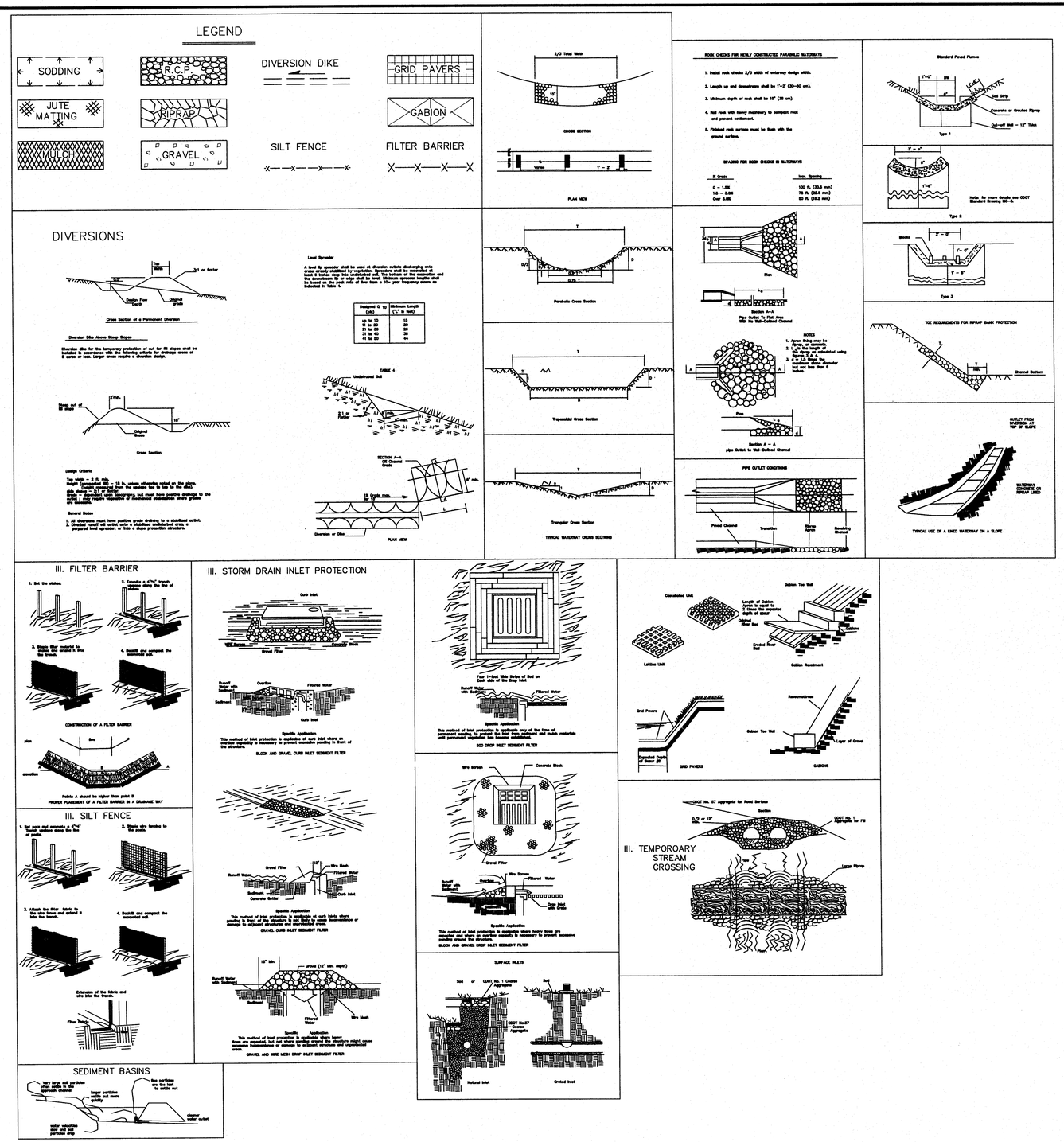

No.	DATE	REVISION	BY
3			
2			
1			

DATE: JULY, 2005
SCALE: H: AS SHOWN
V: AS SHOWN
DESIGNER: A.S.S.
DRAFTER: J.S.S.

WESTBROOK ESTATES
PHASE III
CITY OF MASSILLION
COUNTY OF STARK, STATE OF OHIO

PROJECT NUMBER

A.R. LOCKHART DEVELOPMENT CO.
800 W. WATERLOO RD. AKRON, OH 44314
Ph: 330-745-6520 Fax: 330-745-0716

A.R.L.

5
18

S.W.P.P. NOTES AND DETAILS

3/31/07

{CURRENT JOBS\WESTBROOK\PHASE III\WB03-DETAILS.DWG}

3/31/07

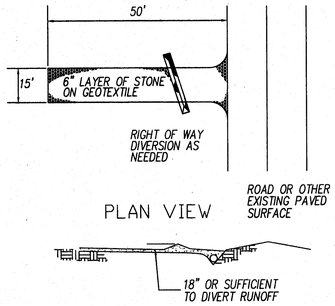

TEMPORARY CONSTRUCTION DRIVE (CRS)

TEMPORARY CONSTRUCTION DRIVE NOTES:

1. *STONE SIZE– TWO-INCH STONE SHALL BE USED, OR RECYCLED CONCRETE EQUIVALENT*
2. *LENGTH– THE CONSTRUCTION ENTRANCE SHALL BE AS LONG AS REQUIRED TO STABILIZE HIGH TRAFFIC AREAS BUT NOT LESS THAN 50 FEET.*
3. *THICKNESS– THE STONE LAYER SHALL BE AT LEAST 6 INCHES THICK.*
4. *WIDTH– THE ENTRANCE SHALL BE AT LEAST 15 FEET WIDE.*
5. *BEDDING– A GEOTEXTILE SHALL BE PLACED OVER THE ENTIRE AREA PRIOR TO PLACING OF STONE. IT SHALL HAVE A GRAB TENSILE STRENGTH OF AT LEAST 200 LBS. AND A MULLEN BURST STRENGTH OF AT LEAST 190 LBS.*
6. *CULVERT– A PIPE OR CULVERT SHALL BE CONSTRUCTED UNDER THE ENTRANCE IF NEEDED TO PREVENT SURFACE WATER FLOWING ACROSS THE ENTRANCE FROM BEING DIRECTED OUT ONTO PAVED SURFACES.*

SEDIMENT PONDS/TRAPS AND PERIMETER CONTROLS SHALL BE IMPLEMENTED AS A FIRST STEP OF GRADING WITHIN 7 DAYS FROM THE START OF GRUBBING AND SHALL CONTINUE TO FUNCTION UNTIL UPLAND AREAS ARE STABILIZED.

DISTURBED AREAS WHICH WILL REMAIN UNWORKED FOR A PERIOD OF 45 DAYS OR MORE, SHALL BE STABILIZED WITH SEEDING AND MULCHING OR OTHER APPROPRIATE MEANS WITHIN 7 DAYS.

DITCHES WITH GRADES GREATER THAN 1.5% WILL HAVE EROSION CONTROL BLANKETS/MATTING INSTALLED AS PART OF STABILIZATION MEASURES.

BUILDER IS RESPONSIBLE FOR EROSION CONTROL ON INDIVIDUAL LOTS.

NO SOLID OR LIQUID WASTE SHALL BE DISCHARGED INTO STORM WATER RUNOFF.

OFF-SITE VEHICLE TRACKING SEDIMENT SHALL BE MINIMIZED. CONSTRUCTION VEHICLES ARE LIMITED TO THE CONSTRUCTION ACCESS ROAD(S) NOTED ON PLAN.

ALL EROSION AND SEDIMENTATION CONTROL PRACTICES MUST MEET THE STANDARDS AND SPECIFICATIONS OF THE OHIO WATER MANAGEMENT AND SEDIMENT CONTROL HANDBOOK FOR URBANIZING AREAS.

OTHER EROSION AND SEDIMENT CONTROL ITEMS MAY BE NECESSARY DUE TO ENVIRONMENTAL CONDITIONS.

REGULAR INSPECTION AND MAINTENANCE WILL BE PROVIDE FOR ALL EROSION AND SEDIMENT CONTROL PRACTICES. PERMANENT RECORDS OF MAINTENANCE AND INSPECTIONS MUST BE KEPT THROUGHOUT THE CONSTRUCTION PERIOD. INSPECTIONSMUST BE MADE A MINIMUM OF ONCE EVERY SEVEN DAYS AND IMMEDIATELY AFTER STORM EVENTS GREATER THAN 0.5 INCHES OF RAIN IN A 24 HOUR PERIOD. PROVIDE NAME OF INSPECTOR, MAJOR OBSERVATIONS, DATE OF INSPECTION AND CORRECTIVE MEASURES TAKEN.

GENERAL NOTES

-NOTICE OF INTENT (NOI) MUST BE SUBMITTED TO OHIO EPA FOR NPDES PERMIT 45 DAYS PRIOR TO THE START OF CLEARING AND OR GRADING.
- CONSTRUCTION MUST COMPLY WITH ALL LOCAL EROSION AND SEDIMENT CONTROL REGULATIONS.
- NO SOLID OR LIQUID WASTE SHOULD BE DISCHARGED INTO STORM WATER RUNOFF.
- OFF-SITE TRACKING OF SEDIMENTS SHALL BE MINIMIZED.
- SWPPP MUST SHOW COMPLIANCE WITH LOCAL WASTE DISPOSAL, SANITARY, AND HEALTH REGULATIONS.

MAINTENANCE AND INSPECTION

PERMANENT RECORDS OF MAINTENANCE AND INSPECTION MUST BE MAINTAINED A MINIMUM OF ONCE EVERY SEVEN DAYS AND AFTER STORM EVENTS GREATER THAN 0.5 INCH IN A 24 HOUR PERIOD. NAME OF INSPECTOR, MAJOR OBSERVATIONS, DATE OF INSPECTION, CERTIFICATION OF COMPLIANCE, CORRECTIVE MEASURES TAKEN. RECORDS MUST BE MAINTAINED FOR 2 YEARS AFTER NOTICE OF INTENT PER OHIO EPA NPDES PERMIT.

REPAIRS

ANY EROSION CONTROL MEASURES, STRUCTURES, DEVICES, OR RELATED ITEMS IN NEED OF REPAIR WILL BE MADE WITHIN FIFTEEN DAYS.

SOIL PROTECTION CHART

STABILIZATION TYPE	J	F	M	A	M	J	J	A	S	O	N	D
PERMANENT SEEDING			*	*	*	*	*	*	*			
DORMANT SEEDING	*	*	*							*	*	*
TEMPORARY SEEDING			*	*	*	*	*	*	*			
SODDING			**	**	**	**	**	**	**			
MULCHING	*	*	*	*	*	*	*	*	*	*	*	*

* IRRIGATION NEEDED DURING JUNE THRU AUGUST
** IRRIGATION NEEDED FOR 2-3 WEEKS AFTER APPLYING SOD

EROSION CONTROL SCHEDULE
PROJECT IMPLEMENTATION SCHEDULE

SYMBOL	ODOT ITEM	QUANTITIES	UNITS	DESCRIPTION
1. SITE VEGETATION				
X	201.03	X	ACRE	SITE CLEARING LIMITS (DENUDED AREA)
2. SEDIMENT CONTROL MEASURES				
SF	207	X	L.F.	SILT FENCING (FILTER FABRIC FENCE)
SBB	207	X	BALE	STRAW BALE BARRIER
SB	207	X	C.Y.	SEDIMENTATION BASINS
IP	207	X	EA.	INLET PROTECTION (FABRIC)
D	207	X	L.F.	DRAINAGE-WAY ROUTING (DIVERSIONS)
SPS	603	X	L.F.	STR. WTR. DISCHARGE CONDUIT ROUTING
3. SITE GRADING				
TSM	207	X	ACRE	TEMP. SEEDING & MULCHING MIX NO. 1
FS	207	X	S.Y.	VEGETATIVE FILTER STRIP
DP	207	X	S.Y.	DITCH PROTECTION
	651	X	C.Y.	TOPSOIL STOCKPILE
CRS	703.01	X	TONS	CONST. ROAD STABILIZATION #1 AGGREGATE
4. SITE IMPROVEMENT INSTALLATION				
IP	207	X	EA.	INLET PROTECTION
CP	601	X	C.Y.	ROCK CHANNEL PROTECTION TYPE A W/ FILTER
OP	601	X	C.Y.	ROCK OUTLET PROTECTION TYPE B W/ FILTER
PS M	659	X	ACRE	PERM. SEEDING & MULCHING MIX NO. 2
5. MISCELLANEOUS				
SCD	207	X	EA.	SILTATION CHECK DAM
EM	670	X	S.Y.	EROSION CONTROL MAT

SCHEDULE OF MAJOR CONSTRUCTION OPERATIONS 2006

	J	F	M	A	M	J	J	A	S	O	N	D
CLEARING								X	X			
SILT FENCE	X	X	X	X	X	X		X	X	X	X	X
SEDIMENT BASINS	X	X	X	X	X	X		X	X	X	X	X
STRAW BALE BARRIERS												
DRAINAGE-WAY ROUTING												
INLET PROTECTION	X	X	X	X	X	X		X	X	X	X	X
DITCH PROTECTION												
MULCHING												
TEMP. SEEDING & MULCHING								X	X	X	X	
PERM. SEEDING & MULCHING			X	X	X	X	X		X	X		

SITE DESCRIPTION (MARK ONE)

SUBDIVISION	X	TOTAL AREA	12.3
COMMERCIAL		PRE-DEV. RUNOFF COEFF.	0.35
RESIDENTIAL		AREA TO BE CLEARED	9.5
P.U.D.		AREA TO BE EXCAVATED	9.5
OTHER		POST. DEV. RUNOFF COEFF.	0.40

SITE LOCATION INFORMATION LATITUDE 40°48'30" LONGITUDE 81°34'30"

CITY OF MASSILLON	STARK	OHIO
TOWNSHIP	COUNTY	STATE
TUSCARAWAS	WEST SIPPO CREEK	
NAME OF WATERSHED / RECEIVING WATERS		
WESTBROOK ESTATES - PHASE III		44314
PROJECT NAME		ZIP CODE
LOCKHART DEVELOPMENT CO.		330-745-6520
DEVELOPER		PHONE
800 WEST WATERLOO RD., AKRON, OHIO		330-745-5711
DEVELOPER ADDRESS		FAX

SOIL TYPES

Symbol	Name	H.S.G.	% OF SITE	% EXCAVATED
CdB	Canfield Silt Loam	C	%	%
CdC	Canfield Silt Loam	C	%	%
CdC2	Canfield Silt Loam	C	%	%
CpA	Chili Silt Loam	C	%	%
CpB	Chili Silt Loam	C	%	%
FcA	Fitchville Silt Loam	C	%	%
ReB	Ravenna Silt Loam	C	%	%
Sh	Shoals Silt Loam	C	%	%
Wd	Wayland Silt Loam	C	%	%
WuC2	Wooster Silt Loam	C	%	%
WuD2	Wooster Silt Loam	C	%	%
			100 %	100 %

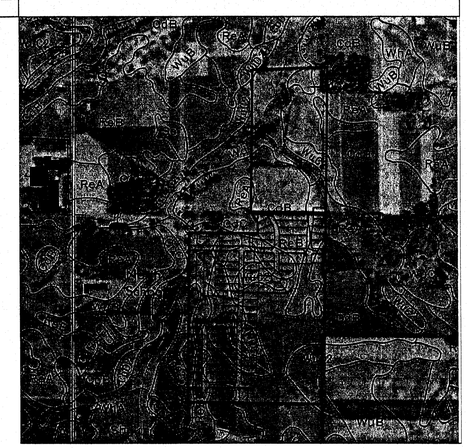

INLET PROTECTION

INLET PROTECTION TO BE PLACED AT ALL INLETS AS INLETS ARE INSTALLED, AND MAINTAINED UNTIL SITE IS STABILIZED.

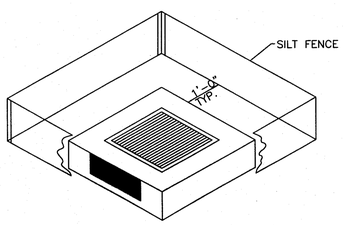

IP *SILT FENCE FILTER FOR INLETS*

NOTE:

REQUIRED EROSION CONTROL FOR ALL PROPOSED CURB INLETS

1. INSTALL SILT FENCE ENTIRELY AROUND EACH INLET AND MAINTAIN AS REQUIRED.
2. UPON INSTALLATION OF CONCRETE PAVEMENT WITH INTEGRAL CURB, MAINTAIN SILT FENCE BEHIND THE CURB (OR PLACE STRAW BALES).
3. MAINTAIN THE SILT FENCE (OR STRAW BALES) BEHIND THE CURB UNTIL GRASS IN THE TREE LAWN AREA IS ESTABLISHED.

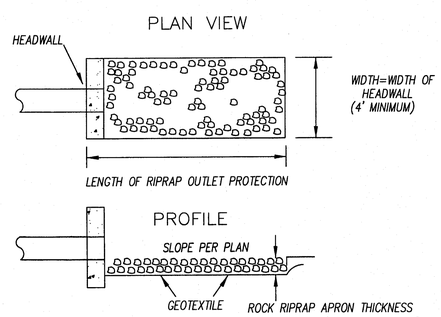

1. *THE SUBGRADE FOR THE FILTER AND RIPRAP SHALL BE PREPARED TO THE REQUIRED LINES AND GRADES AS SHOWN ON THE PLAN.*
2. *THE RIPRAP SHALL CONFORM TO THE GRADING LIMITS AS SHOWN ON THE PLANS.*
3. *GEOTEXTILE SHALL BE WOVEN OR NONWOVEN MONOFILAMENT YARN AND SHALL MEET THE FOLLOWING:*
   - *THICKNESS 20–60 MILLS*
   - *GRAB STRENGTH 90–120 LB.*
   - *ASTM D–1777 and ASTM D–1682*
4. *RIPRAP MAY BE PLACED BY EQUIPMENT BUT SHALL BE PLACED IN A MANNER TO PREVENT DAMAGE TO THE GEOTEXTILE.*

ROCK OUTLET PROTECTION (RP)

No.	DATE	REVISION	BY
3			
2			
1			

DATE: JULY, 2005
SCALE, H: AS SHOWN
SCALE, V: AS SHOWN
DESIGNER: J.S.S.
DRAFTER: J.S.S.

WESTBROOK ESTATES
PHASE III
CITY OF MASSILLON
COUNTY OF STARK, STATE OF OHIO

PROJECT NUMBER

A. R. LOCKHART DEVELOPMENT CO.
800 W. WATERLOO RD AKRON, OH 44314
Ph: 330-745-6520 Fax: 330-745-0716

S.W.P.P. NOTES AND DETAILS

[CURRENT JOBS\WESTBROOK\PHASE III\W503-DETAILS.DWG]

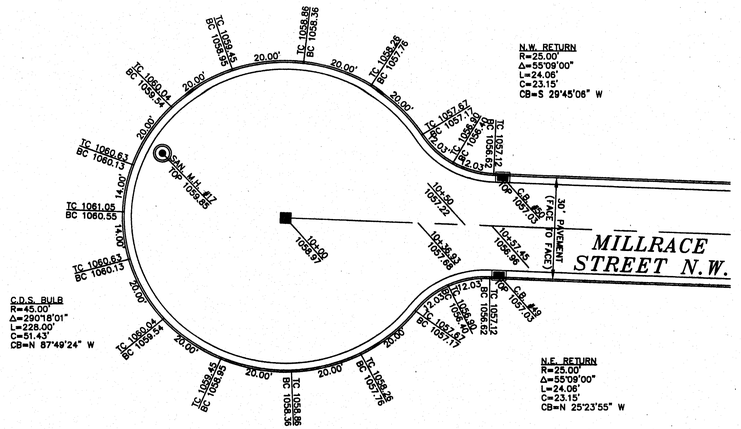

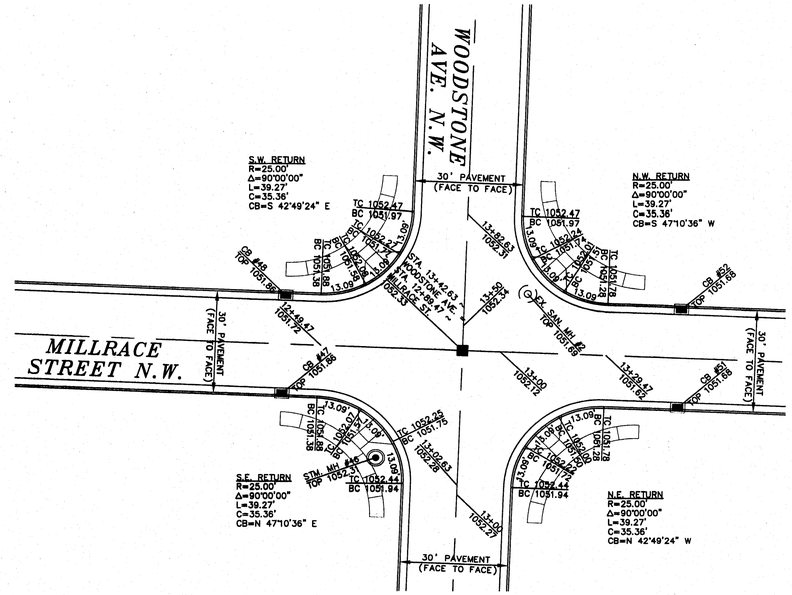

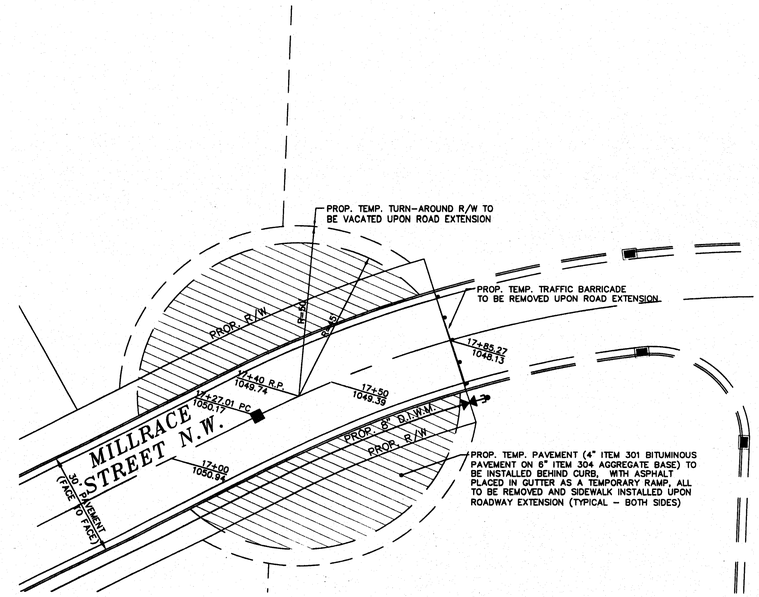

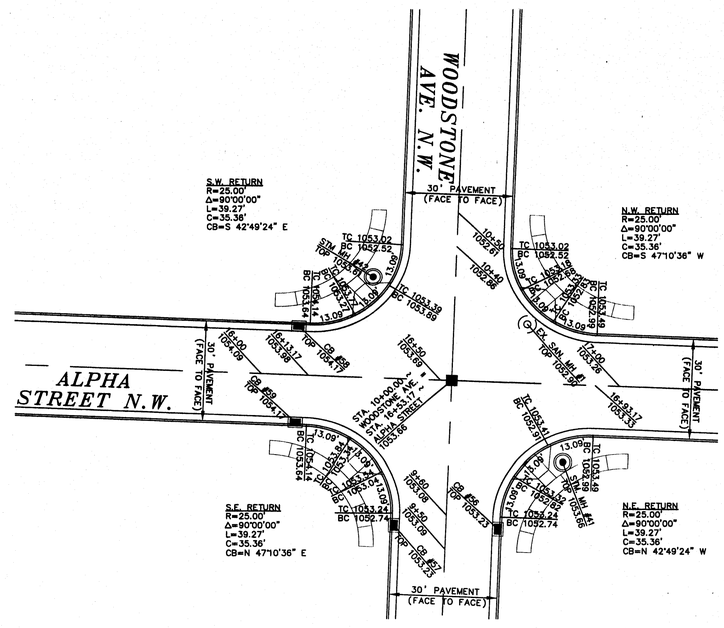

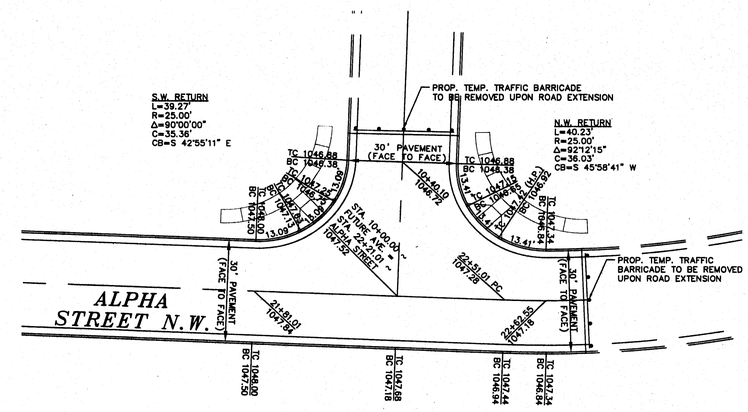

TYPICAL ROAD SECTION – 50' R/W FOR ALL PUBLIC STREETS

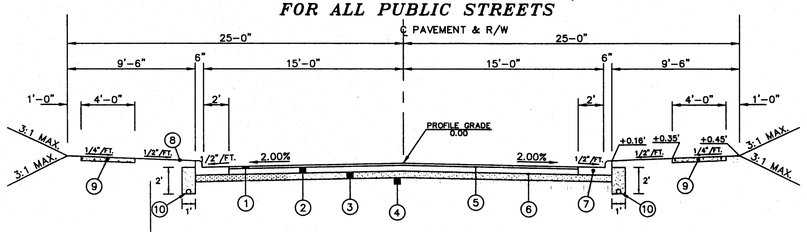

SPECIFICATION REFERENCE

1. O.D.O.T. ITEM 404 – 1-1/2" ASPHALT CONCRETE PAVEMENT
2. O.D.O.T. ITEM 301 – 4" BITUMINOUS AGGREGATE BASE
3. O.D.O.T. ITEM 304 – 6" AGGREGATE BASE
4. O.D.O.T. ITEM 203.13 – SUBGRADE COMPACTION
5. O.D.O.T. ITEM 609 – MASSILLON STANDARD CONCRETE CURB AND GUTTER
6. O.D.O.T. ITEM 659 – SEEDING & MULCHING
7. O.D.O.T. ITEM 408 – PRIME COAT TO BE APPLIED AT THE RATE OF 0.4 GAL./S.Y.
8. O.D.O.T. ITEM 407 – TACK COAT TO BE APPLIED AT THE RATE OF 0.4 GAL./S.Y. (AS REQUIRED)
9. O.D.O.T. ITEM 608 – 4" CONCRETE SIDEWALK (INCREASE TO 6" @ DRIVEWAYS) SIDEWALK TO BE CONSTRUCTED BY INDIVIDUAL LOT OWNER
10. O.D.O.T. ITEM 605 – 4" SHALLOW UNDERDRAIN PIPE

0' 20' 40' 60'
SCALE: 1" = 20'

BENCH MARK
C/L INVERT OF SANITARY SEWER MANHOLE No. 41, LOCATED NEAR THE NORTH EAST CORNER OF A.R. LOCKHART PROPERTY. (ELEV. = 1023.94 FEET)

NOTES:

1. ALL DIMENSIONS & ELEVATIONS ON THIS SHEET ARE TO THE FACE & TOP OF CURB, UNLESS OTHERWISE NOTED.

2. CURB RAMPS AND SIDEWALKS AT THE INTERSECTIONS ARE TO BE CONSTRUCTED AT THE TIME OF CURB CONSTRUCTION.

THE OIL AND GAS PRODUCERS UNDERGROUND PROTECTION SERVICE
P.O. BOX 206
GRANVILLE, OHIO 43023-0206
PHONE (614) 587-0486 OR
CALL TOLL FREE 800-925-0988
2 WORKING DAYS BEFORE YOU DIG
CALL TOLL FREE: 800-362-2764
OHIO UTILITIES PROTECTION SERVICE

No.	DATE	REVISION	BY
3			
2			
1	4/1/07	REV. PER CITY COMMENTS	JSS

DATE: JULY, 2005
SCALE, H: 1" = 20'
SCALE, V:
DESIGNER: J.S.S.
DRAFTER: J.S.S.

WESTBROOK ESTATES
PHASE III
CITY OF MASSILLON
COUNTY OF STARK, STATE OF OHIO

PROJECT NUMBER

A. R. LOCKHART DEVELOPMENT CO.
800 W. WATERLOO RD AKRON, OH 44314
Ph: 330-745-6530 Fax: 330-745-0716

A.R.L.

TYPICAL PAVEMENT SECTION & INTERSECTION DETAILS

3/31/07

[CURRENT JOBS\WESTBROOK\PHASE III\W803-TYP&INTX.DWG]

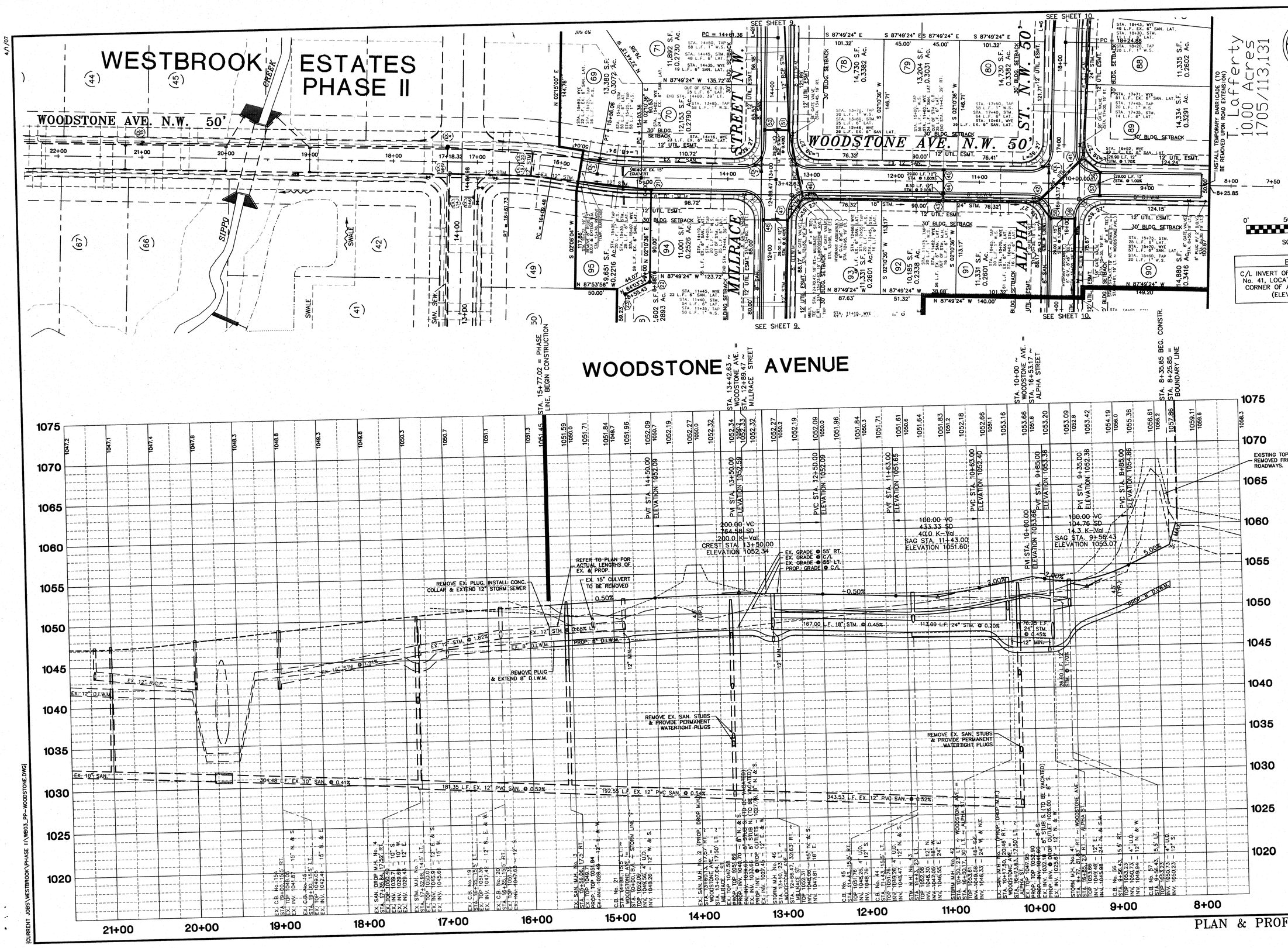
WESTBROOK ESTATES PHASE II
WOODSTONE AVE. N.W. 50'
WOODSTONE AVE. N.W. 50'
MILLRACE STREET N.W.
ALPHA ST. N.W. 50'
WOODSTONE AVENUE
SEE SHEET 9
SEE SHEET 10
INSTALL TEMPORARY BARRICADE (TO BE REMOVED UPON ROAD EXTENSION)
T. Lafferty
10.00 Acres
1705/113,131
SCALE: 1" = 50'
BENCH MARK
C/L INVERT OF SANITARY SEWER MANHOLE No. 41, LOCATED NEAR THE NORTH EAST CORNER OF A. R. LOCKHART PROPERTY. (ELEV. = 1023.94 FEET)
EXISTING TOPSOIL STOCK PILES TO BE REMOVED FROM ALL PROPOSED LOTS AND ROADWAYS.
REFER TO PLAN FOR ACTUAL LENGTHS OF EX. & PROP.
EX. 15" CULVERT TO BE REMOVED
REMOVE EX. PLUG, INSTALL CONC. COLLAR & EXTEND 12" STORM SEWER
REMOVE PLUG & EXTEND 8" D.I.W.M.
REMOVE EX. SAN. STUBS & PROVIDE PERMANENT WATERTIGHT PLUGS
PVI STA. 13+50.00 ELEVATION 1052.59
PVC STA. 14+50.00 ELEVATION 1052.09
PVC STA. 12+50.00 ELEVATION 1052.09
200.00 VC 764.58 SD 200.0 K-Val CREST STA. 13+50.00 ELEVATION 1052.34
PVI STA. 11+63.00 ELEVATION 1051.65
PVC STA. 10+63.00 ELEVATION 1052.40
100.00 VC 433.33 SD 400.0 K-Val SAG STA. 11+43.00 ELEVATION 1051.60
PVI STA. 10+80.00 ELEVATION 1053.66
PVI STA. 9+85.00 ELEVATION 1053.36
PVI STA. 9+35.00 ELEVATION 1052.36
PVC STA. 8+85.00 ELEVATION 1054.86
100.00 VC 104.76 SD 14.3 K-Val SAG STA. 9+56.43 ELEVATION 1053.07
EX. 12" D.I.W.M.
EX. 12" R.C.P.
EX. 10" SAN.
384.48 L.F. EX. 10" SAN. @ 0.41%
181.35 L.F. EX. 12" PVC SAN. @ 0.52%
192.55 L.F. EX. 12" PVC SAN. @ 0.52%
343.53 L.F. EX. 12" PVC SAN. @ 0.52%
167.00 L.F. 18" STM. @ 0.45%
113.00 L.F. 24" STM. @ 0.20%
76.25 L.F. 24" STM. @ 0.45%
PROP. 8" D.I.W.M.
EX. 8" D.I.W.M.
EX. 12" STM.
EX. 15" STM. @ 1.91%
EX. 12" STM. @ 1.82%
SWALE
SIPPO CREEK
NOTE: STORM SEWERS TO BE H.D.P.E. (HIGH DENSITY POLYETHYLENE) PIPE PER O.D.O.T. ITEM 707.33, UNLESS OTHERWISE NOTED. STORM SEWERS NOT HAVING A MINIMUM 2 FT. COVER MUST BE R.C.P. PER O.D.O.T. ITEM 706.02.
THE OIL AND GAS PRODUCERS UNDERGROUND PROTECTION SERVICE
P.O. BOX 206
GRANVILLE, OHIO 43023-0206
PHONE (614) 587-0486 OR
CALL TOLL FREE 800-925-0988
2 WORKING DAYS BEFORE YOU DIG
CALL TOLL FREE: 800-362-2764
OHIO UTILITIES PROTECTION SERVICE
A. R. LOCKHART DEVELOPMENT CO.
800 W. WATERLOO RD. AKRON, OH 44314
Ph: 330-745-6201 Fax: 330-745-0716
WESTBROOK ESTATES PHASE III
CITY OF MASSILLON
COUNTY OF STARK, STATE OF OHIO
PROJECT NUMBER
DATE: JULY, 2005
SCALE, H: 1" = 50'
SCALE, V: 1" = 5'
DESIGNER: J.S.S.
DRAFTER: J.S.S.
No. DATE REVISION BY
1 4/1/07 REV. PER CITY COMMENTS JSS
8/18
PLAN & PROFILE -- WOODSTONE AVE
4/1/07
[CURRENT JOBS\WESTBROOK\PHASE III\WB03_PP-WOODSTONE.DWG]

3/31/07

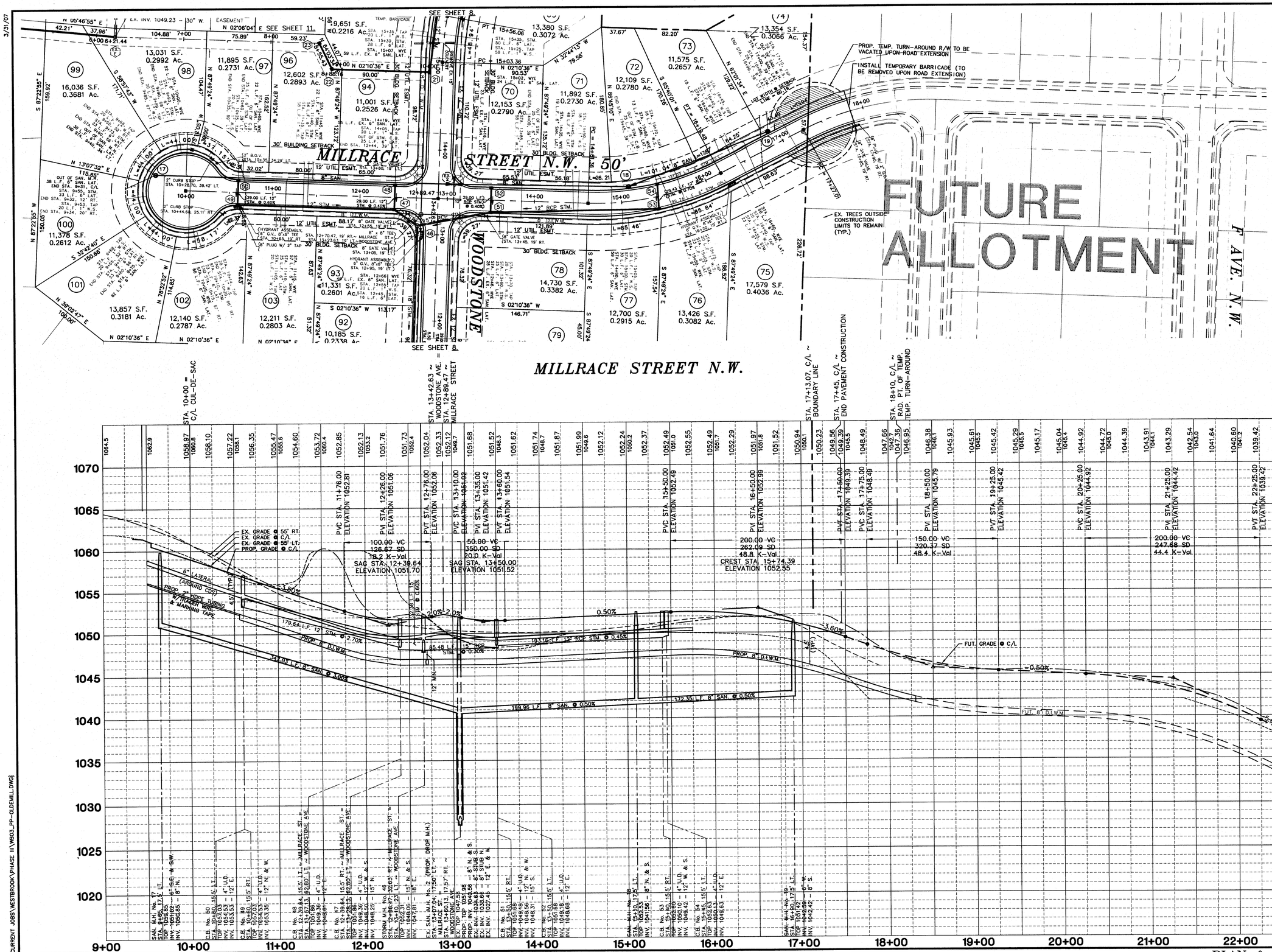

0' 50' 100' 150'
SCALE: 1" = 50'

BENCH MARK
C/L INVERT OF SANITARY SEWER MANHOLE No. 41, LOCATED NEAR THE NORTH EAST CORNER OF A. R. LOCKHART PROPERTY. (ELEV. = 1023.94 FEET)

NOTE:
STORM SEWERS TO BE H.D.P.E. (HIGH DENSITY POLYETHYLENE) PIPE PER O.D.O.T. ITEM 707.33, UNLESS OTHERWISE NOTED. STORM SEWERS NOT HAVING A MINIMUM 2 FT. COVER MUST BE R.C.P. PER O.D.O.T. ITEM 706.02.

THE OIL AND GAS PRODUCERS UNDERGROUND PROTECTION SERVICE
P.O. BOX 206
GRANVILLE, OHIO 43023-0206
PHONE (614) 587-0486 OR
CALL TOLL FREE 800-925-0988

2 WORKING DAYS BEFORE YOU DIG
CALL TOLL FREE: 800-362-2764
OHIO UTILITIES PROTECTION SERVICE

No.	DATE	REVISION	BY
3			
2			
1	4/1/07	REV. PER CITY COMMENTS	JSS

DATE: JULY, 2005
SCALE H: 1" = 50'
SCALE V: 1" = 5'
DESIGNER: J.S.S.
DRAFTER: J.S.S.

WESTBROOK ESTATES PHASE III
CITY OF MASSILLON
COUNTY OF STARK, STATE OF OHIO

PROJECT NUMBER

A. R. LOCKHART DEVELOPMENT CO.
800 W. WATERLOO RD. AKRON, OH 44314
Ph: 330-745-6520 Fax: 330-745-0716

[CURRENT JOBS\WESTBROOK\PHASE III\WB03_PP-OLDEMILL.DWG]

PLAN & PROFILE -- MILLRACE STREET

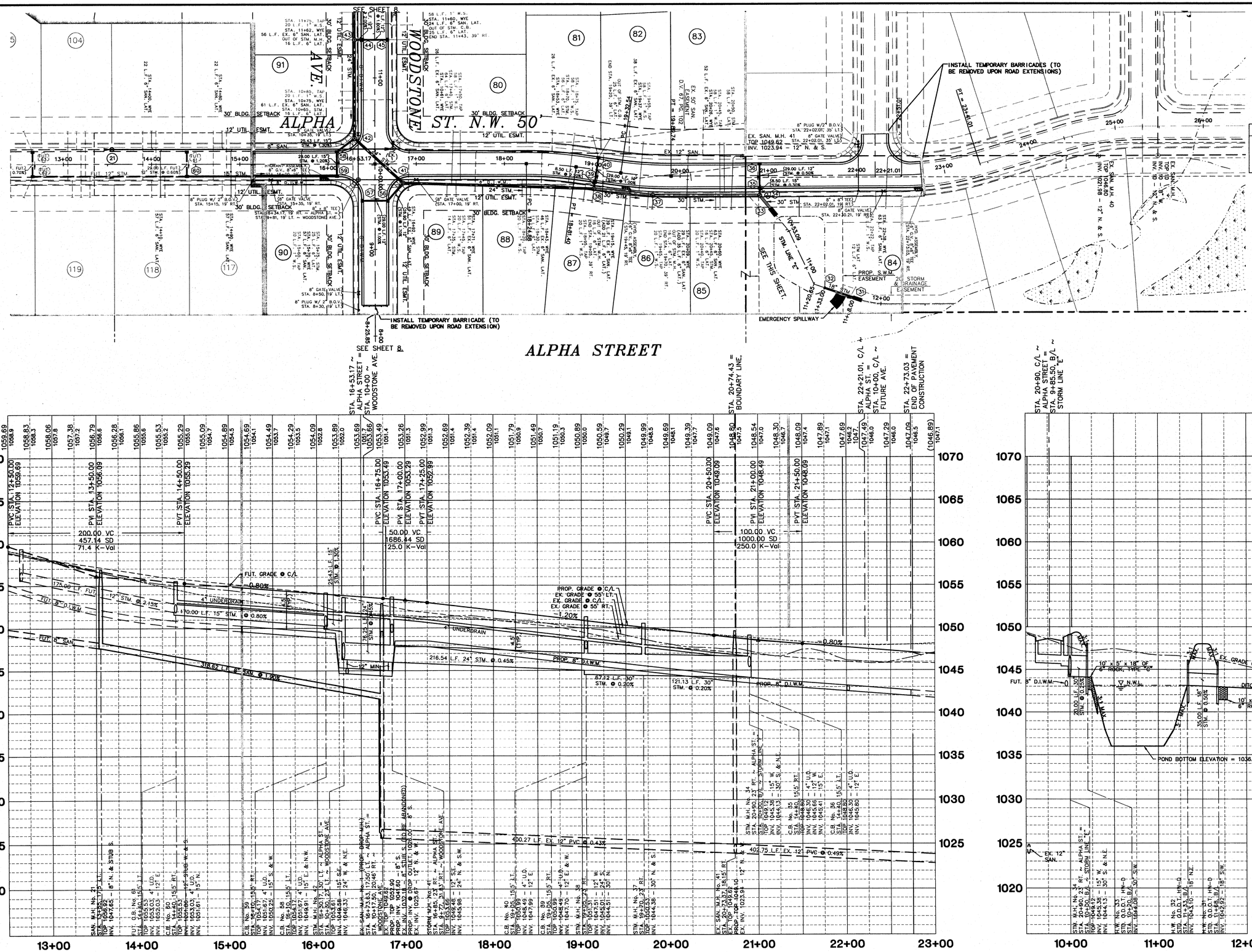

SCALE: 1" = 50'

BENCH MARK

C/L INVERT OF SANITARY SEWER MANHOLE No. 41, LOCATED NEAR THE NORTH EAST CORNER OF A. R. LOCKHART PROPERTY. (ELEV. = 1023.94 FEET)

NOTE:
STORM SEWERS TO BE H.D.P.E. (HIGH DENSITY POLYETHYLENE) PIPE PER O.D.O.T. ITEM 707.33, UNLESS OTHERWISE NOTED. STORM SEWERS NOT HAVING A MINIMUM 2 FT. COVER MUST BE R.C.P. PER O.D.O.T. ITEM 706.02.

THE OIL AND GAS PRODUCERS
UNDERGROUND PROTECTION SERVICE
P.O. BOX 206
GRANVILLE, OHIO 43023-0206
PHONE (614) 587-0486 OR
CALL TOLL FREE 800-925-0988

2 WORKING DAYS
BEFORE YOU DIG
CALL TOLL FREE: 800-362-2764
OHIO UTILITIES PROTECTION SERVICE

No.	DATE	REVISION	BY
3			
2			
1	4/1/07	REV. PER CITY COMMENTS	JSS

DATE: JULY, 2005
SCALE, H: 1" = 50'
SCALE, V: 1" = 5'
DESIGNER: J.S.S.
DRAFTER: J.S.S.

WESTBROOK ESTATES
PHASE III
CITY OF MASSILLON
COUNTY OF STARK, STATE OF OHIO

PROJECT NUMBER

A. R. LOCKHART DEVELOPMENT CO.
800 W. WATERLOO RD AKRON, OH 44314
Ph: 330-745-6520 Fax: 330-745-0716

PLAN & PROFILE -- ALPHA STREET & STORM LINE "E"

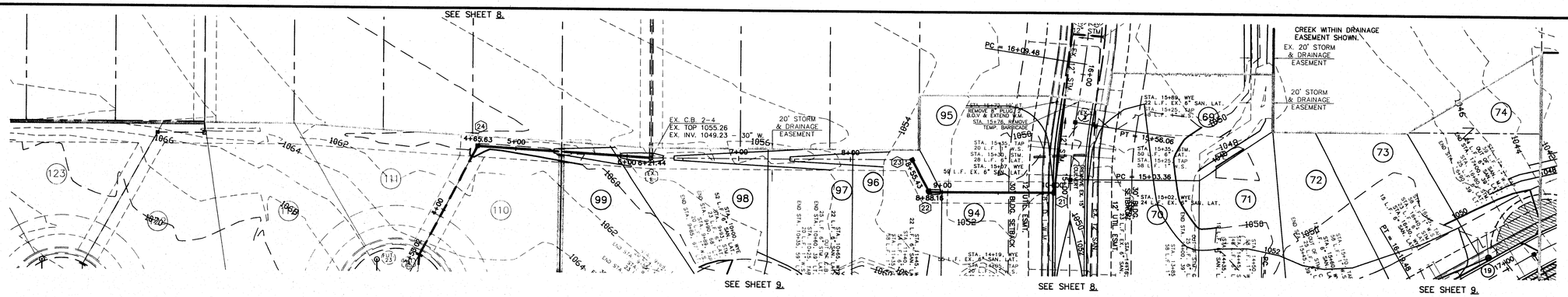

0' 50' 100' 150'

SCALE: 1" = 50'

BENCH MARK
C/L INVERT OF SANITARY SEWER MANHOLE No. 41, LOCATED NEAR THE NORTH EAST CORNER OF A. R. LOCKHART PROPERTY. (ELEV. = 1023.94 FEET)

STORM LINE "F"

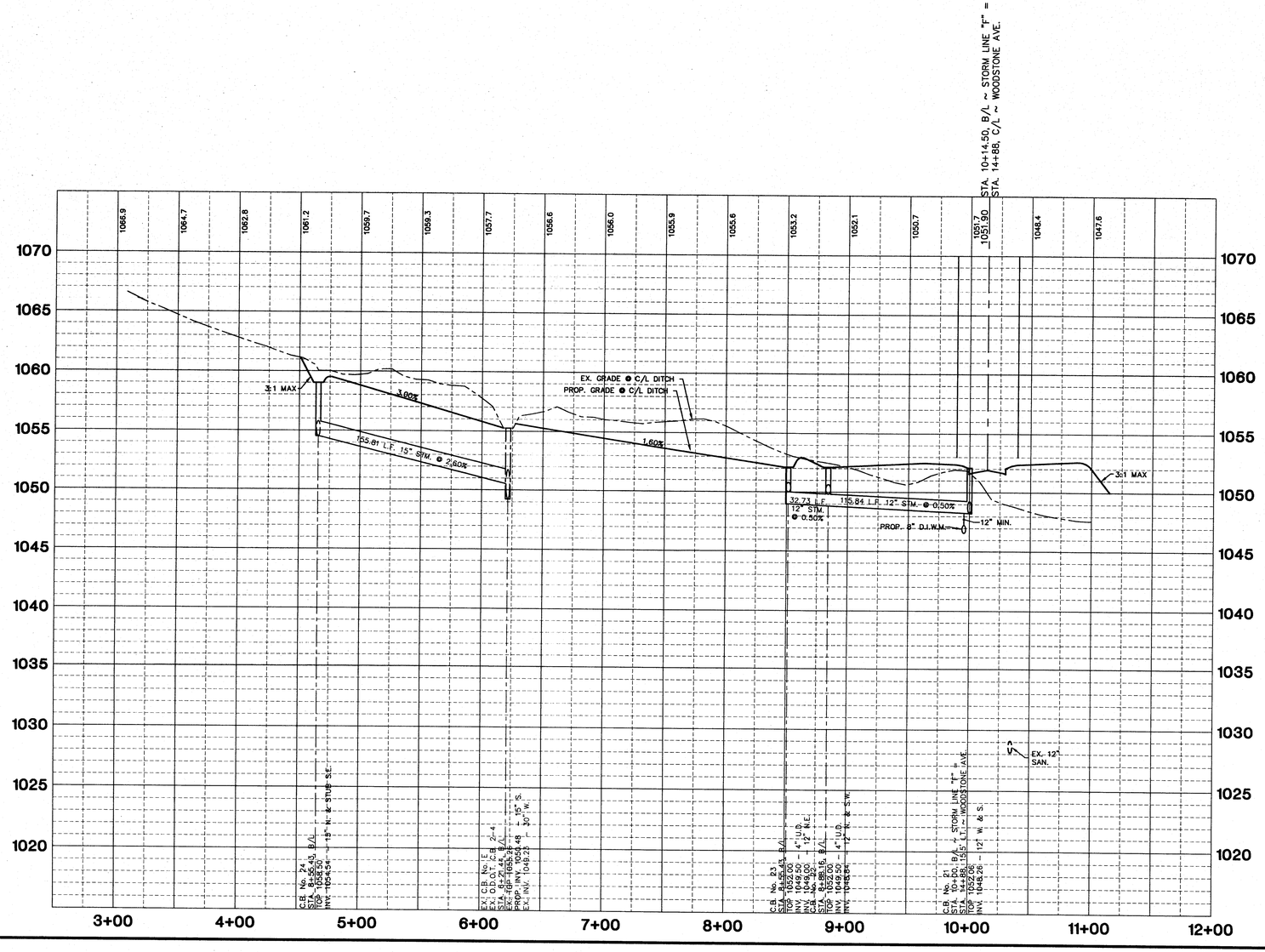

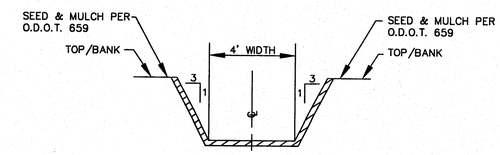

DITCH TYPICAL SECTION

NO SCALE

NOTE:
STORM SEWERS TO BE H.D.P.E. (HIGH DENSITY POLYETHYLENE) PIPE PER O.D.O.T. ITEM 707.33, UNLESS OTHERWISE NOTED. STORM SEWERS NOT HAVING A MINIMUM 2 FT. COVER MUST BE R.C.P. PER O.D.O.T. ITEM 706.02.

THE OIL AND GAS PRODUCERS
UNDERGROUND PROTECTION SERVICE
P.O. BOX 206
GRANVILLE, OHIO 43023-0206
PHONE (614) 587-0486 OR
CALL TOLL FREE 800-925-0988

2 WORKING DAYS
BEFORE YOU DIG
CALL TOLL FREE: 800-362-2764
OHIO UTILITIES PROTECTION SERVICE

No.	DATE	REVISION	BY
1			
2			
3			

DATE: JULY, 2005
SCALE, H: 1" = 50'
SCALE, V: 1" = 5'
DESIGNER: J.S.S.
DRAFTER: J.S.S.

WESTBROOK ESTATES
PHASE III
CITY OF MASSILLON
COUNTY OF STARK, STATE OF OHIO

PROJECT NUMBER

A. R. LOCKHART DEVELOPMENT CO.
800 W. WATERLOO RD AKRON, OH 44314
Ph: 330-745-6520 | Fax: 330-745-0716

PLAN & PROFILE -- STORM LINE "F"

4/24/06

NOTES

1. THE DISTANCE FROM THE CENTERLINE OF MAIN TO THE CENTERLINE OF HYDRANT WILL BE 25' EXCEPT WHEN INDIVIDUAL CIRCUMSTANCES PROVE IT TO BE INFEASIBLE. WHEN SUCH CIRCUMSTANCES OCCUR, THE LENGTH OF THE LEAD WILL BE NOTED ON THE DRAWINGS WITH THE STATIONING.
2. SOLID CONCRETE BLOCK TO BE USED UNDER ALL TEE'S, BENDS AND HYDRANT ELBOW.
3. CRUSHED STONE FILL AROUND HYDRANT DRAIN AND TO A DEPTH OF 2'-0".
4. SOLID CONCRETE BLOCK WITH OAK WEDGES. (BRACED AGAINST UNDISTURBED SOIL)
5. PUMPER NOZZLE FACING STREET.

ITEM	DESCRIPTION
A	MUELLER HYDRANT, 3-WAY "CENTURION" MODEL
B	6" M.J. GATE VALVE, 3 PIECE VALVE BOX
C	ANCHOR COUPLING (F-1211)
D	ANCHOR ELBOW (F-1218)
E	STANDARD M.J. TEE

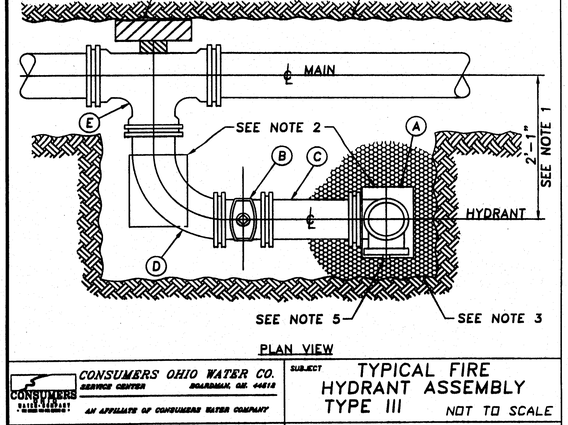

PLAN VIEW

CONSUMERS OHIO WATER CO. SERVICE CENTER BOARDMAN, OH. 44512
AN AFFILIATE OF CONSUMERS WATER COMPANY

SUBJECT TYPICAL FIRE HYDRANT ASSEMBLY TYPE III NOT TO SCALE

revised | district CORPORATE STANDARDS
drawn D. Yarrich | date March, 1994 | approved R. Byrom, P.E. | sheet

NOTES

1. THE DISTANCE FROM THE CENTERLINE OF MAIN TO THE CENTERLINE OF HYDRANT WILL BE 5' EXCEPT WHEN INDIVIDUAL CIRCUMSTANCES PROVE IT TO BE INFEASIBLE. WHEN SUCH CIRCUMSTANCES OCCUR, THE LENGTH OF THE LEAD WILL BE NOTED ON THE DRAWINGS WITH THE STATIONING.
2. SOLID CONCRETE BLOCK TO BE USED UNDER ALL TEES, VALVES AND HYDRANT ELBOW.
3. CRUSHED STONE FILL AROUND HYDRANT DRAIN AND TO A DEPTH OF 2'-0".
4. SOLID CONCRETE BLOCK WITH OAK WEDGES. (BRACED AGAINST UNDISTURBED SOIL)

ITEM	DESCRIPTION
A	MUELLER HYDRANT, 3-WAY "CENTURION" MODEL
B	6" M.J. GATE VALVE, 3 PIECE VALVE BOX
C	ANCHOR TEE (CLOW F-1217)
D	6" DUCTILE PIPE (2-DUC-LUG AND RODS OR RETAINER GLANDS AS ANCHORS)

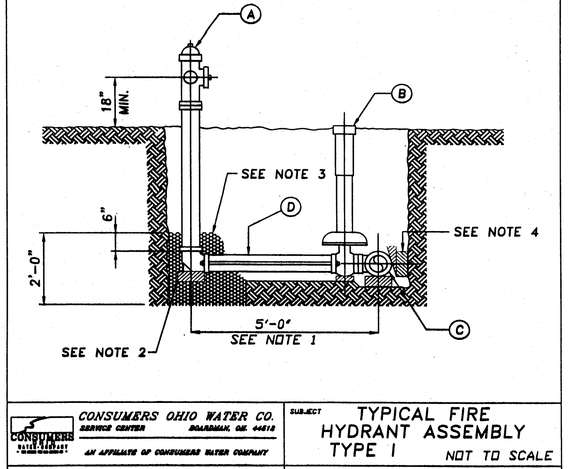

CONSUMERS OHIO WATER CO. SERVICE CENTER BOARDMAN, OH. 44512
AN AFFILIATE OF CONSUMERS WATER COMPANY

SUBJECT TYPICAL FIRE HYDRANT ASSEMBLY TYPE I NOT TO SCALE

revised | district CORPORATE STANDARDS
drawn D. Yarrich | date March, 1994 | approved R. Byrom, P.E. | sheet

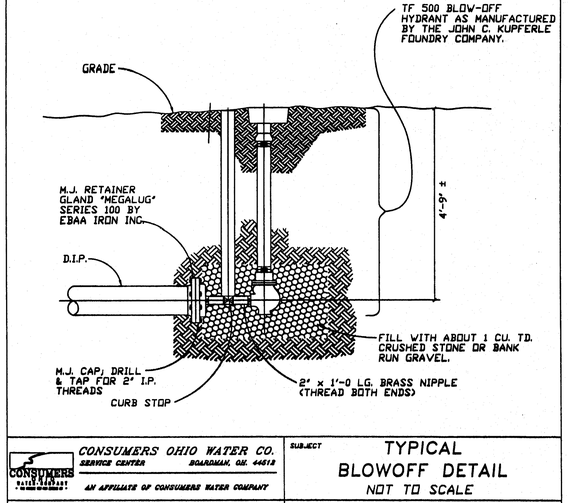

CONSUMERS OHIO WATER CO. SERVICE CENTER BOARDMAN, OH. 44512
AN AFFILIATE OF CONSUMERS WATER COMPANY

SUBJECT TYPICAL BLOWOFF DETAIL NOT TO SCALE

revised | district CORPORATE STANDARDS
drawn D. Yarrich | date March, 1994 | approved R. Byrom, P.E. | sheet

4/24/2006

LOCKHART DEVELOPMENT COMPANY BID PROPOSAL
Westbrook Estates Phase III

Ref. No.	Description	Quantity	Unit Price	Total
	ROADWAY ITEMS			
1	Excavation	4,110 Cy.	2.70	$11,097.00
2	Embankment	3,660 Cy.	1.00	$3,660.00
3	Site Grading	26,000 Sy.	0.25	$6,500.00
4	Subgrade Compaction	6,920 Sy.	0.50	$3,460.00
5	Retention Pond	2,600 Cy.	2.25	$5,850.00
6	Silt Fence	3,530 Lf.	1.50	$5,295.00
7	Inlet Protection	21 Ea.	110.00	$2,310.00
8	Construction Drive	1 LS	1,425.00	$1,425.00
9	Temporary Seeding	51,950 Sy.	0.22	$11,429.00
	Total Roadway Items			**$51,026.00**
	SANITARY SEWER ITEMS			
10	8" Sanitary Sewer (SDR 35)	1,030 Lf.	23.40	$24,102.00
11	6" Sanitary Drop	30 Lf.	54.25	$1,627.50
12	6" Sanitary Lateral	1,930 Lf.	12.00	$23,160.00
13	6" Sanitary Stack Riser	210 Lf.	10.00	$2,100.00
14	Sanitary Manhole	4 Ea	2,304.10	$9,216.40
	Sanitary Sewer Total			**$60,206.90**
	STORM SEWER ITEMS			
15	12" RCP Storm Sewer	840 Lf.	33.65	$28,266.00
16	12" HDPE Storm Sewer	356 Lf.	14.90	$5,304.40
17	15" HDPE Storm Sewer	384 Lf.	19.25	$7,392.00
18	18" HDPE Storm Sewer	280 Lf.	23.45	$6,566.00
19	24" HDPE Storm Sewer	610 Lf.	32.40	$19,764.00
20	6" Storm Lateral Connections	34 Ea.	569.00	$19,346.00
21	4" Shallow Pipe Underdrain	4,300 Lf.	4.00	$17,200.00
22	Curb Inlets	19 Ea.	1,214.50	$23,075.50
23	Catch Basins	3 Ea.	800.00	$2,400.00
24	Storm Manholes	10 Ea.	1,125.50	$11,255.00
25	Head Wall	3 Ea.	1,100.00	$3,300.00
26	ODOT Rock Channel Protection "B"	5 Cy.	89.95	$449.75
27	Storm Ditch F	410 Lf.	2.37	$971.70
	Storm Sewer Total			**$145,290.35**
	WATERMAIN ITEMS			
28	8" DIWM (Includes Valves & Fittings)			
29	Fire Hydrant Assembly	2,150 Lf.	28.70	$61,705.00
30	2" Blow Off Valve Assembly	5 Ea.	2,166.00	$10,830.00
31	2" Copper Water Main	5 Ea.	910.00	$4,550.00
32	1" Copper Water Services	270 Lf.	12.50	$3,375.00
	Watermain Total	34 Ea.	386.25	$13,132.50
				$93,592.50
	PAVEMENT ITEMS			
33	6" (304) Aggregate Base	1,400 Cy.	29.00	$40,600.00
34	Combination Curb & Gutter	4,300 Lf.	10.80	$46,440.00
35	4" (301) Asphalt Base Course	790 Cy.	64.00	$50,560.00
36	1.5" (404) Asphalt Surface Course	295 Cy.	98.00	$28,910.00
37	Tack Coat	590 Gal	1.00	$590.00
38	Monument Boxes	12 LS	250.00	$3,000.00
39	Construction Staking	1	10,000.00	$10,000.00
40	Mobilization	1	2,500.00	$2,500.00
	Pavement Total			**$182,600.00**
	TOTAL COST			**$532,714.75**
	Add 25% Overhead/Profit/Equipement			**$133,178.69**
	TOTAL AMOUNT BID			**$665,893.44**

STANDARD

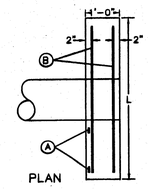

D DIAM OF PIPE	L LGTH HEAD WALL	QUANTITIES IN TWO HEADWALLS A BARS NO.	A BARS LGTH.	B BARS NO.	B BARS LGTH.	STEEL LBS.	REINF C.Y.	PLAIN C.Y.
12"	4'-0"	8	4'-0"	8	3'-6"	40	1.3	2.1
18"	5'-0"	8	4'-3"	8	4'-6"	47	1.7	2.7
18"	6'-0"	8	4'-6"	8	5'-3"	52	2.0	3.3
21"	6'-9"	8	4'-9"	8	6'-3"	58	2.4	4.0
24"	7'-6"	8	5'-0"	8	7'-0"	64	2.8	4.8
27"	8'-3"	8	5'-3"	8	8'-0"	71	3.3	5.5
30"	9'-0"	8	5'-6"	8	8'-9"	76	3.8	6.2
33"	10'-3"	8	5'-9"	8	9'-9"	83	4.3	7.0
36"	11'-0"	8	6'-0"	8	10'-9"	88	4.8	8.0

Headwalls for pipes having a diameter greater than 36 inches shall be designed as a cantilever or gravity type wall.

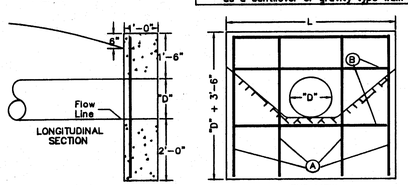

REINFORCED CONCRETE HEADWALL

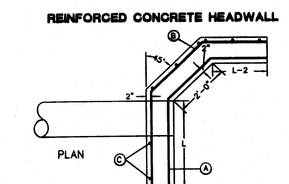

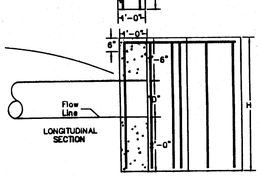

SIDE ROAD

D DIAM OF PIPE	L-1	L-2	H	A BARS NO.	A BARS LGTH.	B BARS NO.	B BARS LGTH.	C BARS NO.	C BARS LGTH.	STEEL LBS.	CONC. C.Y.
12"	2'-6"	1'-6"	4'-6"	2	6'-0"	2	7'-0"	16	4'-0"	60	2.2
13"	3'-0"	2'-0"	4'-9"	2	7'-0"	2	8'-0"	16	4'-3"	65	2.7
18"	3'-9"	2'-9"	5'-0"	2	8'-6"	2	9'-6"	16	4'-6"	72	3.3
21"	4'-3"	3'-3"	5'-3"	2	9'-6"	2	10'-6"	16	4'-9"	78	3.8
24"	4'-9"	3'-9"	5'-6"	2	10'-6"	2	11'-6"	16	5'-0"	83	4.4
27"	5'-3"	4'-3"	5'-9"	2	11'-6"	2	12'-6"	16	5'-3"	88	5.0
30"	6'-0"	5'-0"	6'-0"	2	13'-0"	2	14'-0"	16	5'-6"	95	5.8
33"	6'-6"	5'-6"	6'-3"	2	14'-0"	2	15'-0"	16	5'-9"	100	6.4
36"	7'-0"	6'-0"	6'-6"	2	15'-0"	2	16'-0"	16	6'-0"	106	7.1
39"	7'-6"	6'-6"	6'-9"	2	16'-0"	2	17'-0"	16	6'-3"	111	7.8
42"	8'-3"	7'-3"	7'-0"	2	17'-6"	2	18'-6"	16	6'-6"	118	8.8

NOTES
REINFORCING steel provided for on this drawing shall be 1/2" round bars or bars of equivalent area.
CONCRETE for headwalls shall be Class "C".

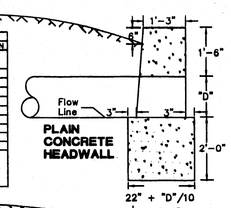

PLAIN CONCRETE HEADWALL

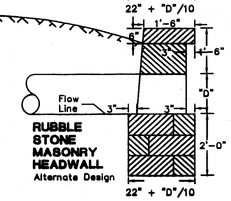

RUBBLE STONE MASONRY HEADWALL
Alternate Design

HILLSIDE

D Diam of Pipe	QUANTITIES IN ONE HALF WALL A BARS NO.	A BARS LGTH.	B BARS NO.	B BARS LGTH.	C BARS NO.	C BARS LGTH.	STEEL LBS.	CONC. C.Y.	QUANTITIES IN ONE OUTER WALL A BARS NO.	A BARS LGTH.	B BARS NO.	B BARS LGTH.	C BARS NO.	C BARS LGTH.	STEEL LBS.	CONC. C.Y.
12"	2	6'-0"	2	7'-0"	16	4'-0"	60	2.2	2	6'-0"	2	7'-0"	16	4'-0"	60	2.2
13"	2	7'-0"	2	8'-0"	16	4'-3"	65	2.7	2	7'-0"	2	8'-0"	16	4'-3"	65	2.7
18"	2	8'-6"	2	9'-6"	16	4'-6"	72	3.3	2	8'-6"	2	9'-6"	16	4'-6"	72	3.3
21"	2	9'-6"	2	10'-6"	16	4'-9"	78	3.8	2	9'-6"	2	10'-6"	16	4'-9"	78	3.8
24"	2	10'-6"	2	11'-6"	16	5'-0"	83	4.4	2	10'-6"	2	11'-6"	16	5'-0"	83	4.4
27"	2	11'-6"	2	12'-6"	16	5'-3"	88	5.0	2	11'-6"	2	12'-6"	16	5'-3"	88	5.0
30"	2	13'-0"	2	14'-0"	16	5'-6"	95	5.8	2	13'-0"	2	14'-0"	16	5'-6"	95	5.8
33"	2	14'-0"	2	15'-0"	16	5'-9"	100	6.4	2	14'-0"	2	15'-0"	16	5'-9"	100	6.4
36"	2	15'-0"	2	16'-0"	16	6'-0"	106	7.1	2	15'-0"	2	16'-0"	16	6'-0"	106	7.1
39"	2	16'-0"	2	17'-0"	16	6'-3"	111	7.8	2	16'-0"	2	17'-0"	16	6'-3"	111	7.8
42"	2	17'-6"	2	18'-6"	16	6'-6"	118	8.8	2	17'-6"	2	18'-6"	16	6'-6"	118	8.8

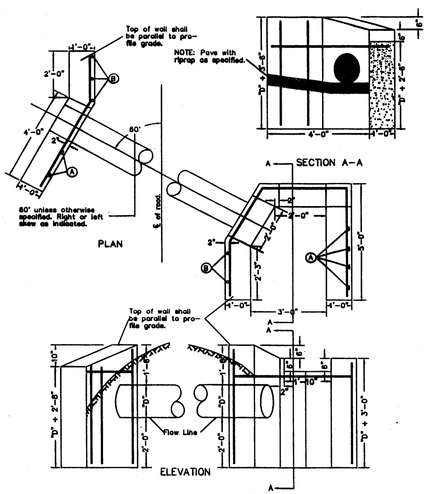

BUREAU OF LOCATION AND DESIGN
OHIO DEPARTMENT OF TRANSPORTATION
HEADWALLS
STANDARD CONSTRUCTION DRAWING HW-0
6-1-65

WESTBROOK ESTATES -- PHASE III
SANITARY LATERAL SCHEDULE
MARCH, 2006

LOT NUMBER	DISTANCE FROM DOWNSTREAM MH	INVERT @ MAIN	CROWN ELEV.	EX. LATERAL LENGTH	PROP./ADD'L LATERAL LENGTH	RISER HEIGHT	LAT. ELEV. @ END	GROUND ELEV. @ END
MH 21 TO EX. MH 1		**318.62 L.F. OF 8" SAN. @ 1.00%;**				**LOW END INV.= 1041.60**		
103 (PH. IV)	2+73.63	1046.80	1047.47		22		1047.69	1056.0
118 (PH. IV)	2+63.63	1046.61	1047.28		57		1047.85	1057.0
102 (PH. IV)	1+93.63	1045.28	1045.95		22		1046.17	1054.0
117 (PH. IV)	1+83.63	1045.09	1045.76		57		1046.33	1056.0
89	1+03.63	1043.57	1044.24		57		1044.81	1056.0
MH 19 TO MH 18		**172.35 L.F. OF 8" SAN. @ 0.50%;**				**LOW END INV.= 1041.56**		
74	1+72.35 (@ MH)	1042.42	1043.09		24		1043.33	1050.0
75	1+42.00	1042.27	1042.94		60		1043.54	1052.0
73	1+12.00	1042.12	1042.79		15		1042.94	1052.0
72	0+48.00	1041.80	1042.47		13		1042.60	1052.0
76	0+38.00	1041.75	1042.42		64		1043.06	1052.0
MH 18 TO EX. MH 2		**199.96 L.F. OF 8" SAN. @ 0.50%;**				**LOW END INV.= 1040.56**		
77	1+80.00	1041.46	1042.13		59		1042.72	1052.0
71	1+27.00	1041.20	1041.87		19		1042.06	1052.0
MH 17 TO EX. MH 2		**342.03 L.F. OF 8" SAN. @ 3.00%;**				**LOW END INV.= 1040.56**		
98	3+42.03 (@ MH)	1050.82	1051.49		30		1051.79	1062.0
99	3+42.03 (@ MH)	1050.82	1051.49		38		1051.87	1064.0
100	3+32.00	1050.52	1051.19		82		1052.01	1063.0
97	3+07.00	1049.77	1050.44		52		1050.96	1060.0
101	3+02.00	1049.62	1050.29		86		1051.15	1060.0
96	2+42.00	1047.82	1048.49		22		1048.71	1058.0
102	1+92.00	1046.32	1046.99		57		1047.56	1056.0
106	1+62.00	1045.42	1046.09		22		1046.31	1056.0
EX. MH 4 TO EX. MH 3		**181.35 L.F. OF 12" SAN. @ 0.41%;**				**LOW END INV.= 1028.49**		
69	0+33.00	1028.63	1029.63	22	11	11	1040.85	1052.0
EX. MH 3 TO EX. MH 2		**192.55 L.F. OF 12" SAN. @ 0.54%;**				**LOW END INV.= 1027.45**		
94	1+47.00	1028.24	1029.24	59	10	10	1039.83	1050.0
93	0+59.00	1027.77	1028.77	55	12	12	1041.32	1053.0
70	0+56.00	1027.75	1028.75	23	12	12	1040.98	1053.0
EX. MH 2 TO EX. MH 1		**343.53 L.F. OF 12" SAN. @ 0.52%;**				**LOW END INV.= 1025.67**		
92	2+48.50	1026.96	1027.96	46	12	12	1040.30	1052.0
78	1+68.50	1026.55	1027.55	26	10	10	1037.71	1050.0
91	1+42.50	1026.41	1027.41	56	12	12	1039.85	1052.0
79	1+44.50	1026.42	1027.42	24	10	10	1037.56	1050.0
90	0+57.50	1025.97	1026.97	61	14	14	1041.44	1054.0
80	0+43.50	1025.90	1026.90	26	13	13	1040.03	1052.0
EX. MH 1 TO EX. MH		**400.27 L.F. OF 12" SAN. @ 0.43%;**				**LOW END INV.= 1023.94**		
88	3+02.00	1027.24	1028.24	51	13	13	1041.62	1054.0
87	2+30.00	1026.87	1027.87	46	13	13	1041.20	1053.0
81	2+20.00	1026.81	1027.81	26	12	12	1039.95	1052.0
86	1+58.00	1026.49	1027.49	39	21	11	1038.77	1051.0
82	01+26.00	1026.33	1027.33	38	11	11	1038.60	1051.0

No.	DATE	REVISION	BY
3			
2			
1			

DATE: JULY, 2005
SCALE: H: AS SHOWN
SCALE: V: AS SHOWN
DESIGN: JCS
DRAWN: JCS

WESTBROOK ESTATES PHASE III
CITY OF MASSILLON

PROJECT NUMBER

A. R. LOCKHART DEVELOPMENT CO.
800 W. WATERLOO RD. AKRON, OH 44314
PHONE: (330) 745-2000

12/18

AQUA OHIO WATER DETAILS, HEADWALL DETAIL, AND CONSTRUCTION COST ESTIMAT

[CURRENT JOBS\WESTBROOK\PHASE III\WB03-DETAILS.DWG]

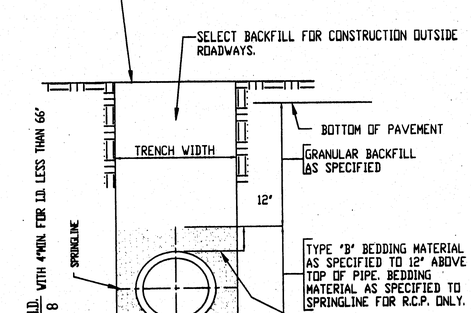

TRENCH WIDTH UP TO 42"PIPE ,I.D.PIPE + 2'0"
48" & LARGER ,O.D.PIPE + 2'0"

* STARK COUNTY BEDDING CLASSIFICATION TYPE B MEETS OR EXCEEDS ASTM D-2321 CLASS 1 BEDDING FOR FLEXIBLE PIPING, AND ASTM C-12, CLASS B BEDDING FOR RIGID PIPING.

BEDDING AND TRENCH DETAIL

TYPE "B" BEDDING

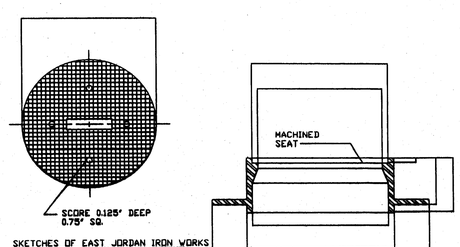

SKETCHES OF EAST JORDAN IRON WORKS

MANHOLE CASTING

MANHOLE COVER

EAST JORDAN IRON WORKS NO. 2015 W/TYPE 'C' VENT COVER
EAST AKRON CASTING CO. CASTING NO. 155, COVER NO. 156 OR APPROVED EQUAL

WATERPROOF CASTING AND COVER

NEENAH R 1916 C
EAST JORDAN IRON WORKS NO. 1058 PT
OR APPROVED EQUAL.

NOTE:
COVER SHALL BEAR THE WORDS:
"SANITARY SEWER" OR "SAN. SEWER"

ALL CAST IRON SHALL CONFORM TO ASTM A48, CLASS 35B IRON.
CASTING WEIGHT: APPROX. 319 LBS.
COVER WEIGHT: APPROX. 131 LBS.

MANHOLE CASTING AND COVER

WESTBROOK ESTATES -- PHASE III
STORM SEWER CALCULATIONS
APRIL, 2007

FROM STR. #	TO STR. #	RUNOFF AREA (Ac.)	RUNOFF COEF. "C"	INCR. C X A	TOTAL C X A	INCR. TIME (min.)	TOTAL TIME (min.)	STORM INTEN. (in./hr.)	ACC. FLOW (cfs)	PIPE DIMENSIONS MANNING "n"	D REQ. (in.)	DIAM. (in.)	SLOPE (ft./ft.)	LENGTH (ft.)	FULL FLOW (cfs)	FULL VEL. (fps)	ACT. VEL. (fps)	INCR. TIME (min.)	UP INV. (ft.)	DOWN INV. (ft.)	TOP ELEV. (ft.)	STR. DEPTH (ft.)
CB-24	EX. CB-E	0.61	0.54	0.33	2.07	0.2	12.4	4.45	9.23	0.012	13.9	15	0.0260	155.81	11.29	9.20	9.84	0.26	1054.54	1050.48	1059.00	4.46
EX. CB-E	EX. CB-13A	0.52	0.54	0.28	2.35	0.3	12.7	4.41	10.38	0.012	23.8	30	0.0019	152.80	19.17	3.91	3.91	0.78	1049.23	1048.89	1055.20	5.97
CB-63	CB-62	0.49	0.54	0.26	0.26	10.0	10.0	4.86	1.29	0.012	8.4	12	0.0070	29.00	3.37	4.29	3.95	0.12	1055.82	1055.62	1059.32	3.50
CB-62	CB-60	0.50	0.54	0.27	0.53	0.1	10.1	4.84	2.59	0.012	8.8	12	0.0215	175.00	5.90	7.51	7.13	0.41	1055.62	1051.86	1059.32	3.70
CB-61	CB-60	0.74	0.54	0.40	0.40	10.0	10.0	4.86	1.94	0.012	10.0	12	0.0060	29.00	3.12	3.97	3.97	0.12	1052.03	1051.86	1056.53	3.50
CB-60	CB-59	0.88	0.54	0.31	1.25	0.1	10.6	4.77	6.96	0.012	14.5	15	0.0080	170.00	6.51	5.31	5.94	0.48	1051.61	1050.26	1056.53	3.92
CB-59	CB-58	0.47	0.54	0.26	1.50	0.5	11.0	4.69	7.04	0.012	14.3	15	0.0120	29.00	8.00	6.52	7.30	0.07	1050.26	1049.91	1054.17	3.92
CB-58	MH-42	0.37	0.54	0.20	1.70	0.1	11.1	4.66	7.96	0.012	14.8	15	0.0130	26.43	8.33	6.78	7.60	0.06	1049.91	1049.58	1054.17	4.26
CB-57	CB-56	0.25	0.54	0.14	0.14	10.0	10.0	4.86	0.66	0.012	6.1	12	0.0100	29.00	4.03	5.13	3.59	0.13	1050.23	1049.94	1053.23	3.00
CB-56	MH-41	0.20	0.54	0.11	0.24	0.1	10.1	4.84	1.16	0.012	8.8	12	0.0170	26.90	5.29	6.69	5.15	0.09	1049.94	1049.48	1053.23	3.29
CB-54	CB-53	0.15	0.54	0.08	0.08	10.0	10.0	4.86	0.39	0.013	5.6	12	0.0070	29.43	2.98	3.80	2.35	0.21	1049.63	1049.42	1052.63	3.00
CB-53	CB-51	0.27	0.54	0.15	0.23	16.0	16.0	3.92	0.89	0.013	8.3	12	0.0045	193.16	2.38	3.03	2.78	1.16	1049.42	1048.56	1052.60	3.18
CB-52	CB-51	0.50	0.54	0.27	0.27	10.0	10.0	4.86	1.31	0.013	9.8	12	0.0040	29.00	2.25	2.87	2.87	0.17	1048.68	1048.56	1051.68	3.00
CB-51	MH-46	0.44	0.54	0.24	0.73	0.2	17.2	3.83	2.81	0.013	13.8	15	0.0030	85.48	3.54	2.88	3.08	0.46	1048.31	1048.06	1051.68	3.37
CB-50	CB-49	0.50	0.54	0.27	0.27	10.0	10.0	4.86	1.31	0.012	8.7	12	0.0060	29.00	3.12	3.97	3.77	0.13	1053.53	1053.35	1057.03	3.50
CB-49	CB-47	1.09	0.54	0.59	0.86	16.0	16.0	3.92	3.37	0.012	9.3	12	0.0270	179.64	6.62	8.43	8.43	0.36	1053.35	1048.50	1057.03	3.68
CB-48	CB-47	0.37	0.54	0.20	0.20	10.0	10.0	4.86	0.97	0.012	8.4	12	0.0040	29.00	2.53	3.22	2.97	0.16	1048.81	1048.50	1051.86	3.25
CB-47	MH-46	0.55	0.54	0.30	1.36	0.2	16.4	3.89	5.27	0.012	14.6	15	0.0060	32.38	5.63	4.59	5.14	0.10	1048.25	1048.06	1051.86	3.61
MH-46	MH-43			0.00	2.09	0.1	17.8	3.79	7.92	0.012	17.9	18	0.0046	167.00	8.00	4.53	5.16	0.54	1047.81	1047.05	1052.31	4.50
CB-45	CB-44	1.18	0.54	0.64	0.64	10.0	10.0	4.86	3.10	0.012	10.9	12	0.0100	29.00	4.03	5.13	5.49	0.09	1048.76	1048.47	1051.76	3.00
CB-44	MH-43	0.91	0.54	0.49	1.13	23.0	23.0	3.35	3.78	0.012	10.3	12	0.0200	8.50	5.70	7.25	7.25	0.02	1048.47	1048.30	1051.76	3.29
MH-43	MH-42			0.00	3.22	0.0	23.0	3.35	10.78	0.012	23.8	24	0.0020	113.00	11.29	3.59	4.03	0.47	1048.55	1046.33	1052.08	6.53
MH-42	MH-41			0.00	4.92	0.5	23.5	3.32	16.33	0.012	23.6	24	0.0045	76.25	17.15	5.46	6.12	0.21	1046.33	1045.98	1053.61	7.28
MH-41	MH-38			0.00	5.16	0.2	23.7	3.30	17.04	0.012	23.9	24	0.0045	216.45	17.15	5.46	6.23	0.58	1045.98	1045.01	1053.66	7.68
CB-40	CB-39	0.72	0.54	0.39	0.39	10.0	10.0	4.86	1.89	0.012	9.0	12	0.0100	29.00	4.03	5.13	4.87	0.10	1047.99	1047.70	1050.99	3.00
CB-39	MH-38	0.61	0.54	0.33	0.72	0.1	10.1	4.86	3.49	0.012	9.8	12	0.0220	8.50	5.97	7.61	7.61	0.02	1047.70	1047.51	1050.99	3.29
MH-38	MH-37			0.00	5.88	0.0	24.3	3.25	19.11	0.012	29.1	30	0.0020	67.12	20.74	4.22	4.73	0.24	1044.51	1044.38	1051.31	5.80
MH-37	MH-34			0.00	5.88	0.2	24.5	3.23	19.99	0.012	29.0	30	0.0020	121.13	20.74	4.22	4.73	0.43	1044.38	1044.13	1050.53	6.15
CB-36	CB-35	0.80	0.54	0.43	0.43	10.0	10.0	4.86	2.10	0.012	10.7	12	0.0050	29.00	2.85	3.63	3.88	0.12	1045.80	1045.66	1048.80	3.00
CB-35	MH-34	0.47	0.54	0.25	0.69	0.1	10.1	4.84	3.32	0.012	14.0	15	0.0030	8.50	4.00	3.26	3.49	0.04	1045.41	1045.38	1048.80	3.39
MH-34	HW-33			0.00	5.57	0.0	24.9	3.19	20.95	0.012	28.9	30	0.0025	20.00	23.18	4.72	5.29	0.06	1044.13	1044.08	1049.12	4.99
CB-23	CB-22	0.47	0.54	0.25	0.25	19.0	19.0	3.67	0.93	0.012	7.9	12	0.0050	32.73	2.85	3.63	3.05	0.18	1049.00	1048.84	1052.00	3.00
CB-22	CB-21	0.10	0.54	0.05	0.31	0.2	19.2	3.67	1.13	0.012	8.5	12	0.0050	115.84	2.85	3.63	3.34	0.58	1048.84	1048.26	1052.00	3.16
CB-21	Ex. CB-19	0.28	0.54	0.15	0.46	0.6	19.8	3.62	1.66	0.012	9.5	12	0.0058	144.56	3.07	3.91	3.91	0.62	1048.26	1047.42	1052.06	3.80
Ex. CB-20	Ex. CB-19	0.64	0.54	0.35	0.35	10.0	10.0	4.86	1.68	0.012	9.2	12	0.0072	29.00	3.43	4.36	4.15	0.12	1047.63	1047.42	1051.35	3.72
Ex. CB-19	Ex. MH-1	0.44	0.54	0.24	1.04	0.1	20.4	3.57	3.72	0.012	10.4	12	0.0182	96.67	5.43	6.92	7.40	0.22	1047.42	1045.66	1051.35	3.93
Ex. CB-14A	Ex. CB-14	1.22	0.54	0.66	0.66	10.0	10.0	4.86	3.20	0.012	10.2	12	0.0148	29.00	4.90	6.24	6.24	0.08	1046.92	1046.49	1050.20	3.28
Ex. CB-14	Ex. MH-1	0.73	0.54	0.39	1.05	0.1	10.1	4.86	5.12	0.012	11.5	12	0.0204	28.47	5.75	7.32	8.20	0.06	1046.49	1045.91	1050.20	3.71
Ex. MH-1	Ex. CB-15			0.00	2.10	0.1	20.6	3.55	7.44	0.012	13.4	15	0.0191	167.20	10.10	8.23	8.81	0.32	1045.66	1042.46	1050.16	4.50
Ex. CB-15	Ex.CB-15A	0.18	0.54	0.10	2.19	0.3	20.9	3.52	7.72	0.012	13.4	15	0.0203	29.00	10.42	8.49	9.08	0.05	1042.46	1041.87	1049.05	6.59
Ex.CB-15A	Ex. HW	0.57	0.54	0.31	2.50	0.1	21.0	3.52	8.80	0.012	14.1	15	0.0199	55.64	10.31	8.40	9.41	0.10	1041.87	1040.76	1049.05	7.18

A. R. Lockhart Development Co.

(\\Archive\archive_c\CURRENT JOBS\WESTBROOK\SPREAD03-storm.xls)

Rev. 4/1/2007 4:47 PM

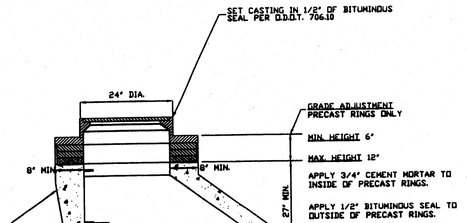

NOTE:
THIS DETAIL APPLIES FOR ECCENTRIC CONE SECTIONS OR PRECAST FLAT SLAB TOP.

MANHOLE GRADE ADJUSTMENT DETAIL

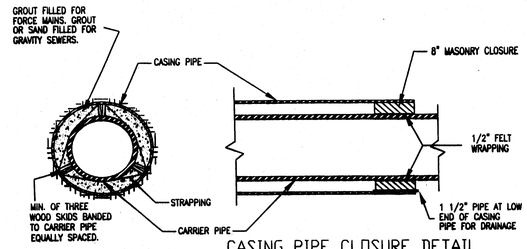

SECTION "A-A"

CASING PIPE CLOSURE DETAIL

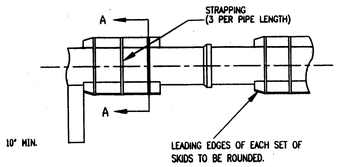

PIPE SKID DETAIL

CASING PIPE EQUAL TO TWICE THE I.D. OF CARRIER PIPE FOR PUSH-ON-JOINT PIPE. FOR D.C.I.P. W/MECH. JOINTS & FOR R.C.P. CASING PIPE TO BE TWO SIZES LARGER THAN TWICE THE CARRIER PIPE I.D.

PIPE BORING

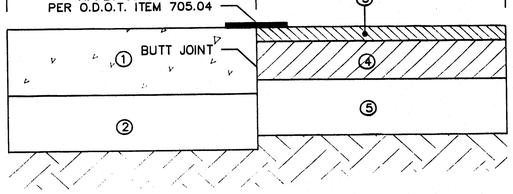

1. EX. 7" PLAIN CONCRETE PAVEMENT
2. EX. 6" AGGREGATE BASE
3. PROP. 1-1/2" ASPHALT CONCRETE PAVEMENT *
4. PROP. 4" BITUMINOUS AGGREGATE BASE *
5. PROP. 6" AGGREGATE BASE *

* SEE TYPICAL PAVEMENT SECTION TO VERIFY

PAVEMENT BUTT JOINT DETAIL

NO SCALE

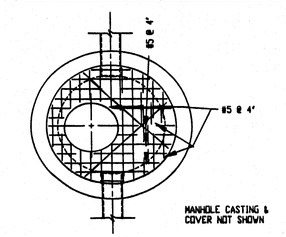

PLAN

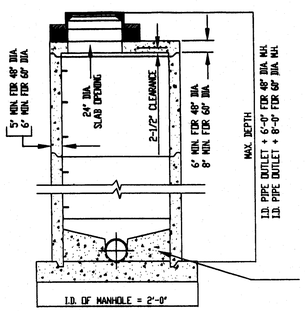

SECTION

MANHOLE I.D.
48" FOR SEWERS 8" through 21"
60" FOR SEWERS 24" through 36"

NOTE:
FOR SPECIFICATIONS REGARDING CONCRETE TO BE USED IN MANHOLES SEE ITEM NO'S.4&16

NOTE:
IF TOP STEP IS IN 24" DIA. OPENING IT MAY PROJECT NO MORE THAN 3-1/2 ".

NOTE:
M.A. IND. PS-1-PF REINFORCED PLASTIC STEPS OR APPROVED EQUAL.

SEE DRAWINGS:
NO. 12 FOR GRADE ADJUSTMENT.
NO. 13 FOR CASTING DETAILS.

FOR P.V.C. & A.B.S. PIPE CONNECTIONS USE ASTM C-923 FLEXIBLE GASKET SUCH AS A-LOK, DURA SEAL III, KOR-N-SEAL OR APPROVED EQUAL. THIS METHOD ALSO ACCEPTABLE FOR V.C.P.

PRECAST MANHOLE SECTIONS SHALL MEET ASTM C478. MANHOLE JOINTS SHALL MEET ASTM C443.

CONCRETE WITH STEEL TROWEL FINISH OR PRECAST INVERT CHANNELS & BENCH.

SHALLOW PRECAST MANHOLE

No.	REVISION	BY
1		
2		
3		

DATE:

DATE: JULY, 2005
SCALE, H: AS SHOWN
SCALE, V: AS SHOWN
DESIGNER: J.S.S.
DRAFTER: J.S.S.

WESTBROOK ESTATES PHASE III
CITY OF MASSILLON
COUNTY OF STARK, STATE OF OHIO

PROJECT NUMBER

A. R. LOCKHART DEVELOPMENT CO.
800 W. WATERLOO RD AKRON, OH 44314
PH: 330-745-6530 Fax: 330-745-0716

13
18

MISCELLANEOUS DETAILS & STORM SEWER CALCULATIONS

(CURRENT JOBS\WESTBROOK\PHASE III\W803-DETAILS.DWG)

4/24/06

Francis H. Ciochinelli, Jr.
Massillon Means More!
CITY OF MASSILLON ENGINEERING
151 LINCOLN WAY EAST
MASSILLON, OHIO (330)830-1722
FAX: (330)830-1786

PIPE ENCASEMENT DETAIL

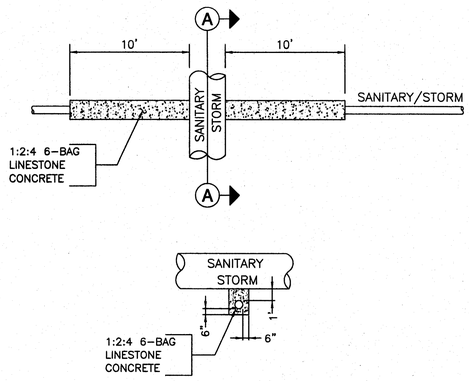

NOTE

ENCASEMENT SHALL BE PLACE ON ANY CROSSING WITH LESS THAN 2' OF SPACE BETWEEN SANITARY AND STORM

Francis H. Ciochinelli, Jr.
Massillon Means More!
CITY OF MASSILLON ENGINEERING
151 LINCOLN WAY EAST
MASSILLON, OHIO (330)830-1722
FAX: (330)830-1786

OPEN CUT DETAIL

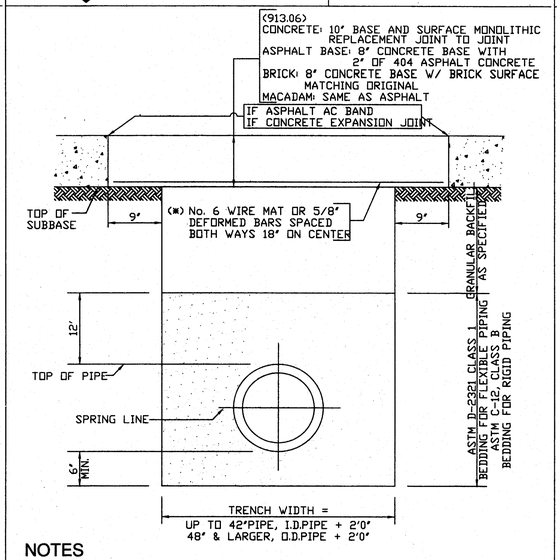

NOTES

(*) MUST BE USED WHEN WIDTH OF TRENCH IS GREATER THAN 3' AT THE SUBBASE LEVEL

CONCRETE BASE SHALL BE OF 1:2:4, 6 BAG MIX, PORTLAND CEMENT CONCRETE USING HIGH EARLY STRENGTH CEMENT AND IT MUST BE CURED AT LEAST 48 HRS.

Francis H. Ciochinelli, Jr.
Massillon Means More!
CITY OF MASSILLON ENGINEERING
151 LINCOLN WAY EAST
MASSILLON, OHIO (330)830-1722
FAX: (330)830-1786

CENTERLINE MONUMENT DETAILS

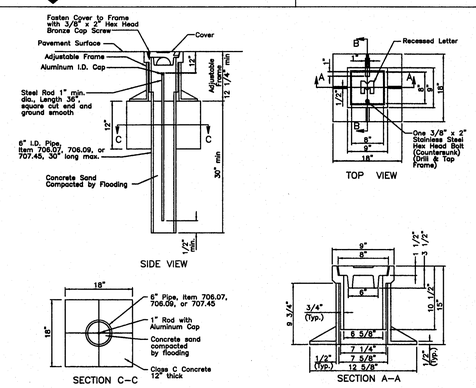

MONUMENTS

Monuments shall be constructed in accordance with detail as shown on the standard construction drawings and at the locations on previous sheets.

Francis H. Ciochinelli, Jr.
Massillon Means More!
CITY OF MASSILLON ENGINEERING
151 LINCOLN WAY EAST
MASSILLON, OHIO (330)830-1722
FAX: (330)830-1786

CURB RAMP DETAILS

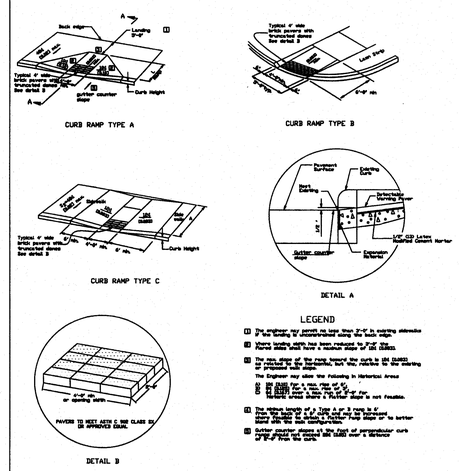

NOTES

SURFACE TEXTURE: Texture of concrete surfaces shall be obtained by coarse broom, brushmarks on the ramp slopes and shall be rougher than the adjacent walk.

TRUNCATED DOMES: Shall be detectable warnings (truncated domes) that are attached to the back of the ramp for the entire width of the ramp opening.

Pavers: As per ASTM C 902 Class SX, Type I, or C 936, or C 1272 Type B.

ACCEPTABLE MANUFACTURERS AND PRODUCTS ARE AS FOLLOWS:

1.) Lehigh Hanson Stonecrafting Company
Product: Stonecraft Brick
Phone: 1-800-[illegible]
2.) Mid-States Pavers
Mid-States Pavers, 6"x6"x2-1/4" Clear Red, Ruellic, 600
3.) Decorator Architectural Products
Decorator Pavers
Product: Brick, 7500
Phone: 1-800-[illegible]
4.) Endicott Clay Products
Endicott Clay Products
Product: Brick
Phone: 1-800-[illegible]
5.) Hanover Architectural Products
Hanover Architectural Warning Paver, Pro-Cast-Plus Red Blend

Pavers at the top of the ramp shall be flush with the adjacent walk. Pavers at the bottom of the ramp shall be flush with the adjacent gutter. Pavers shall be installed in accordance with the manufacturer's specifications. Pavers shall be a minimum of 24" deep and have a minimum of 36" of detectable warning surface. Pavers shall be shipped using wood pallets which shall be removable by forklift.

Detectable warning tiles to be flush with the surrounding walk surface so as to prevent a tripping hazard. Tiles shall be installed in accordance with the manufacturer's specifications. Tiles shall be installed from edge to edge and end to end of the concrete surface.

Expansion joints: Joints in the adjacent walks should not differ by more than 1/2" in height. Joints shall be placed in a running bond pattern. Joint or cold joints shall be clean of concrete and protected so as to avoid chipping during construction.

Expansion joints: Joints are provided in the curb ramp to accommodate of slab movement and to control the location of cracks. Joints are required at the back of the ramp where the ramp meets the walk. Joints are required at the front of the ramp where the ramp meets the gutter to separate the ramp from the gutter to allow for independent movement. Joints should be placed in matching concrete walls. Joint should be the entire thickness of the curb ramp and slope transition and are not necessarily joint lines.

Relief joints: Joints are provided at all points of continuous slope changes in Curb Type A and Type C.

Patterns: Turn slab, curb ramp, flares, which include the start of curvature and tangents are to contract or expand the joint pattern of the surrounding walks. Joints are to be arranged so that the flow line and midpoint of the widening transition of perform each joint.

LEGEND

1. The gutter line of a curb ramp flare is to be a maximum of 2" above the adjacent gutter line.
2. Where landing width has been reduced to 3'-0" the flares slope will have a maximum slope of 10.33%.
3. The top edge of the ramp beyond the curb is to be flared to the sidewalk, driveway, or other walk surface to the starting of adjacent curb ramps.

The Engineer may allow the following in Historical Areas:

4. The flares for a max rise of 6".
5. The flares may be omitted if the curb is 6" or less and the slope of the adjacent walk is not feasible.
6. The minimum length of 1 foot is a 6" 6 rise 6" 6.
7. Where the curb ramp is in the middle of the sidewalk, place handrail to extend 12" beyond the ramp to better blend with the curb configuration.
8. Gutter depression at a minimum foot of perpendicular curb ramp should not exceed 1/2" and over a distance of 2 from the curb.

Francis H. Ciochinelli, Jr.
Massillon Means More!
CITY OF MASSILLON ENGINEERING
151 LINCOLN WAY EAST
MASSILLON, OHIO (330)830-1722
FAX: (330)830-1786

MANHOLE TYPE 3

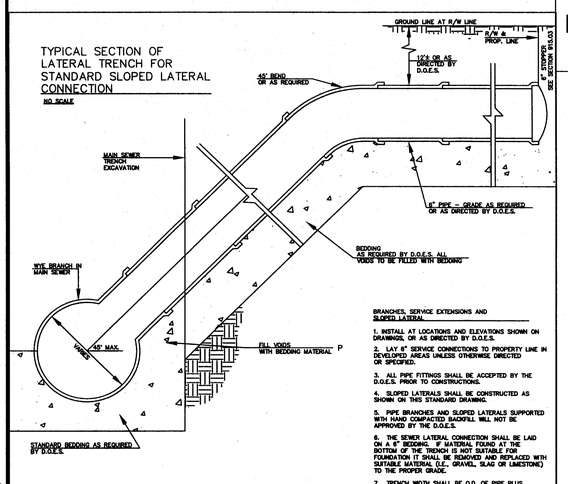

BRANCHES, SERVICE EXTENSIONS AND SLOPED LATERAL

1. INSTALL AT LOCATIONS AND ELEVATIONS SHOWN ON DRAWINGS, OR AS DIRECTED BY D.O.E.S.
2. LAY 6" SERVICE CONNECTIONS TO PROPERTY LINE IN DEVELOPED AREAS UNLESS OTHERWISE DIRECTED OR SPECIFIED.
3. ALL PIPE FITTINGS SHALL BE ACCEPTED BY THE D.O.E.S. PRIOR TO CONSTRUCTIONS.
4. SLOPED LATERALS SHALL BE CONSTRUCTED AS SHOWN ON THIS STANDARD DRAWING.
5. PIPE BRANCHES AND SLOPED LATERALS SUPPORTED WITH HAND COMPACTED BACKFILL WILL NOT BE APPROVED BY THE D.O.E.S.
6. THE SEWER LATERAL CONNECTION SHALL BE LAID ON A 6" BEDDING. IF MATERIAL FOUND AT THE BOTTOM OF THE TRENCH IS NOT SUITABLE FOR FOUNDATION IT SHALL BE REMOVED AND REPLACED WITH SUITABLE MATERIAL (I.E., GRAVEL, SLAG OR LIMESTONE) TO THE PROPER GRADE.
7. TRENCH WIDTH SHALL BE O.D. OF PIPE PLUS 2'-0" MAXIMUM.

MARKER

1. PROVIDE 2"x2" POLES TO MARK END TO BRANCHES, SERVICE CONNECTIONS AND SLOPED LATERALS FOR FUTURE LOCATIONS.
2. EXTEND POLE FROM BELL TO 12" ABOVE GROUND SURFACE DURING CONSTRUCTION.
3. REST POPLES AGAINST BELL BUT NOT ON IT.
4. SUPPORT POLES IN VERTICAL POSITIONS DURING BACKFILL.
5. BUT 2"x2" POLES OFF 12" BELOW GROUND LEVEL AFTER CONSTRUCTION. (POLES TO BE OF ROUGH CUT LUMBER.)

PRECAST BASE
NOT TO SCALE

STANDARD DETAIL DWG. NO. 13-A
DEPARTMENT OF ENVIROMENTAL SERVICES
PRECAST MANHOLE W/ PRECAST CONCRETE BASE
APPROVED BY
CONSTRUCTION ADMINISTRATOR 11/9/86
DATE

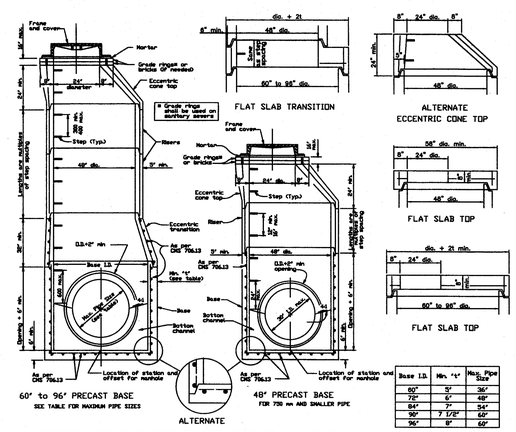

SECTION VIEWS OF REINFORCED PRECAST MANHOLES

Base I.D.	Min. "t"	Max. Pipe Size
60"	5"	36"
72"	6"	48"
84"	7"	54"
90"	7 1/2"	60"
96"	8"	60"

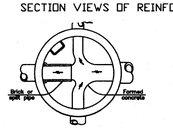

SECTION BELOW SPRING LINE

Showing method of turning side drain which enter the manhole at the flowline

NOTES

GENERAL: With normal soil and site conditions the standard precast manhole may be used for any required manhole depth.

SITE CONDITIONS: Precast manhole shall be cast and achieve 4ksi strength at 28 days or all grades ends up. Lift holes may be provided in each section for handling.

TOP AND TRANSITION OR REDUCER: This section shall be a flat slab unless an eccentric cone is specified.

BASE: Manhole No. 3 is shown with a monolithic floor and riser which may be cast in one or two pours at the manufacturer's option. The base shall also have the inlet and barrel alternate to provide for inlet and outlet pipes shall be provided either when

Bottom channels may be formed of concrete, precast in the base or field constructed as shown.

RISER SECTION: Precast manhole risers and transition cones may be either prefabricated or cut in the field provided the sides of the pipe at the springline do not project into the manhole.

CONNECTIONS: Connections between precast manhole sections and pipes on sanitary sewers may be sealed with resilient connectors conforming to ASTM C 923.

JOINT SEAL: Seal between precast manhole sections on sanitary sewers shall be resilient and flexible gasket joints per CMS 706.03.

MATERIALS: Materials for bases and either precast sections, including reinforcement, shall be as shown, and shall comply with the requirements of CMS 706.02.

DROP PIPE: When specified on the plans, drop pipe shall be constructed as shown on SM-12A.

STEPS, FRAMES AND COVERS: Shall comply with the requirements set forth on MM-1A.

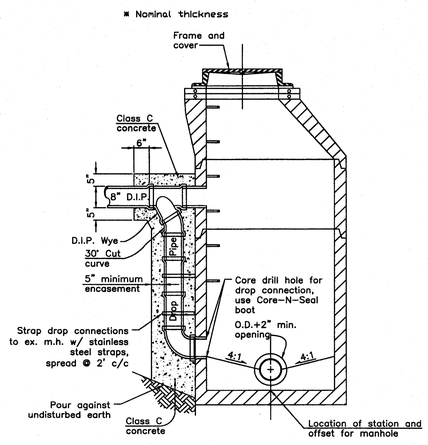

MODIFIED DROP MANHOLE

Notes:
1.) Stack to be 8" D.I.P.
2.) Continue D.I.P. for 1 pipe length (18') beyond drop connection and join with SDR-35 pipe using Fern Co. connection.

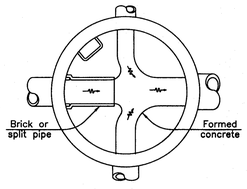

SECTION BELOW SPRING LINE

Showing method of turning side drain which enter the manhole at the flowline

Francis H. Ciochinelli, Jr.
Massillon Means More!
CITY OF MASSILLON ENGINEERING
151 LINCOLN WAY EAST
MASSILLON, OHIO (330)830-1722
FAX: (330)830-1786

CATCH BASIN DETAIL

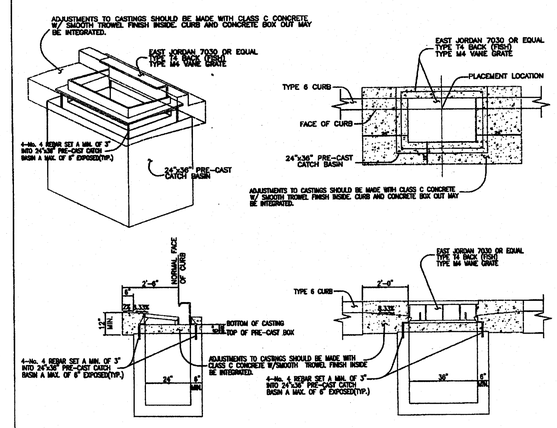

Massillon Curb Inlet (MASS CI-1)

WESTBROOK ESTATES
PHASE III
CITY OF MASSILLON
COUNTY OF STARK, STATE OF OHIO

No.	DATE	REVISION	BY
1			
2			
3			

DATE: JULY, 2005
SCALE, H: AS SHOWN
SCALE, V: AS SHOWN
DESIGNER: J.S.S.
DRAFTER: J.S.S.

PROJECT NUMBER

A. R. LOCKHART DEVELOPMENT CO.
800 W. WATERLOO RD AKRON, OH 44314
Ph:330-745-6520 Fax:330-745-0716

MISCELLANEOUS DETAILS

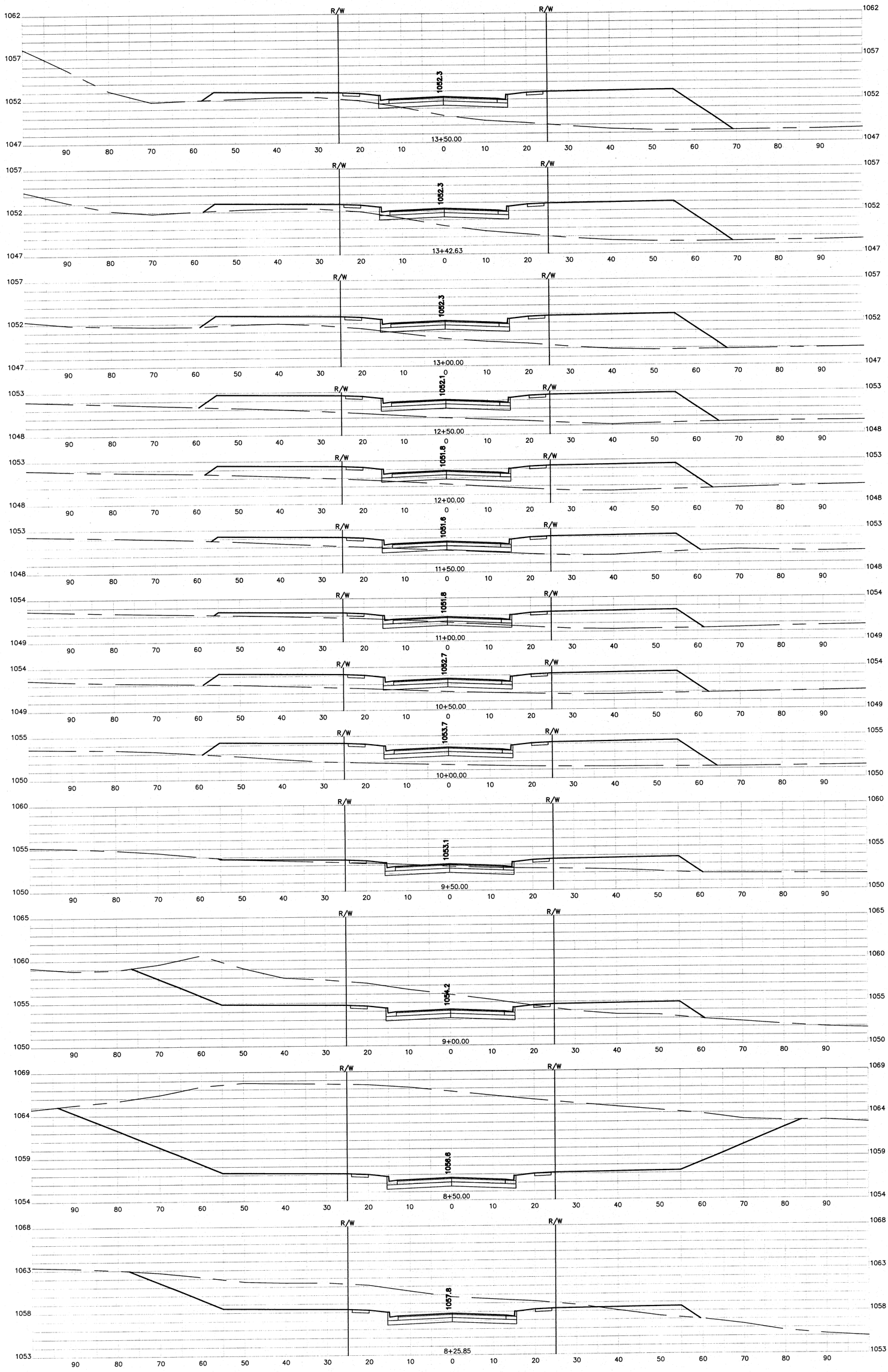

CROSS-SECTIONS -- WOODSTONE AVE. (STA. 8+50 TO STA. 13+50)

15
18

A. R. LOCKHART DEVELOPMENT CO.
800 W. WATERLOO RD AKRON, OH 44314
Ph: 330-745-6520 Fax: 330-745-0716

PROJECT NUMBER

WESTBROOK ESTATES
PHASE III
CITY OF MASSILLON
COUNTY OF STARK, STATE OF OHIO

DATE: JULY, 2005
SCALE, H: 1" = 10'
SCALE, V: 1" = 5'
DESIGNER: J.S.S.
DRAFTER: J.S.S.

No.	DATE	REVISION	BY
3			
2			
1	4/1/07	REV. PER CITY COMMENTS	JSS

CROSS-SECTIONS -- WOODSTONE AVE. (STA. 14+00 TO STA. 17+00) & MILLRACE ST. (STA. 10+00 TO 12+00)

DATE: JULY, 2005	3		
SCALE, H: 1" = 10'	2		
SCALE, V: 1" = 5'	1	4/1/07	REV. PER CITY COMMENTS
DESIGNER: J.S.S.			
DRAFTER: J.S.S.	No.	DATE	REVISION

WESTBROOK ESTATES
PHASE III
CITY OF MASSILLON
COUNTY OF STARK, STATE OF OHIO

PROJECT NUMBER

A.R.L

A. R. LOCKHART DEVELOPMENT CO.
800 W. WATERLOO RD AKRON, OH 44314
Ph: 330-745-6520 Fax: 330-745-0716

3/31/07

[CURRENT JOBS\WESTBROOK\PHASE III\WB03--XSECTIONS.DWG]

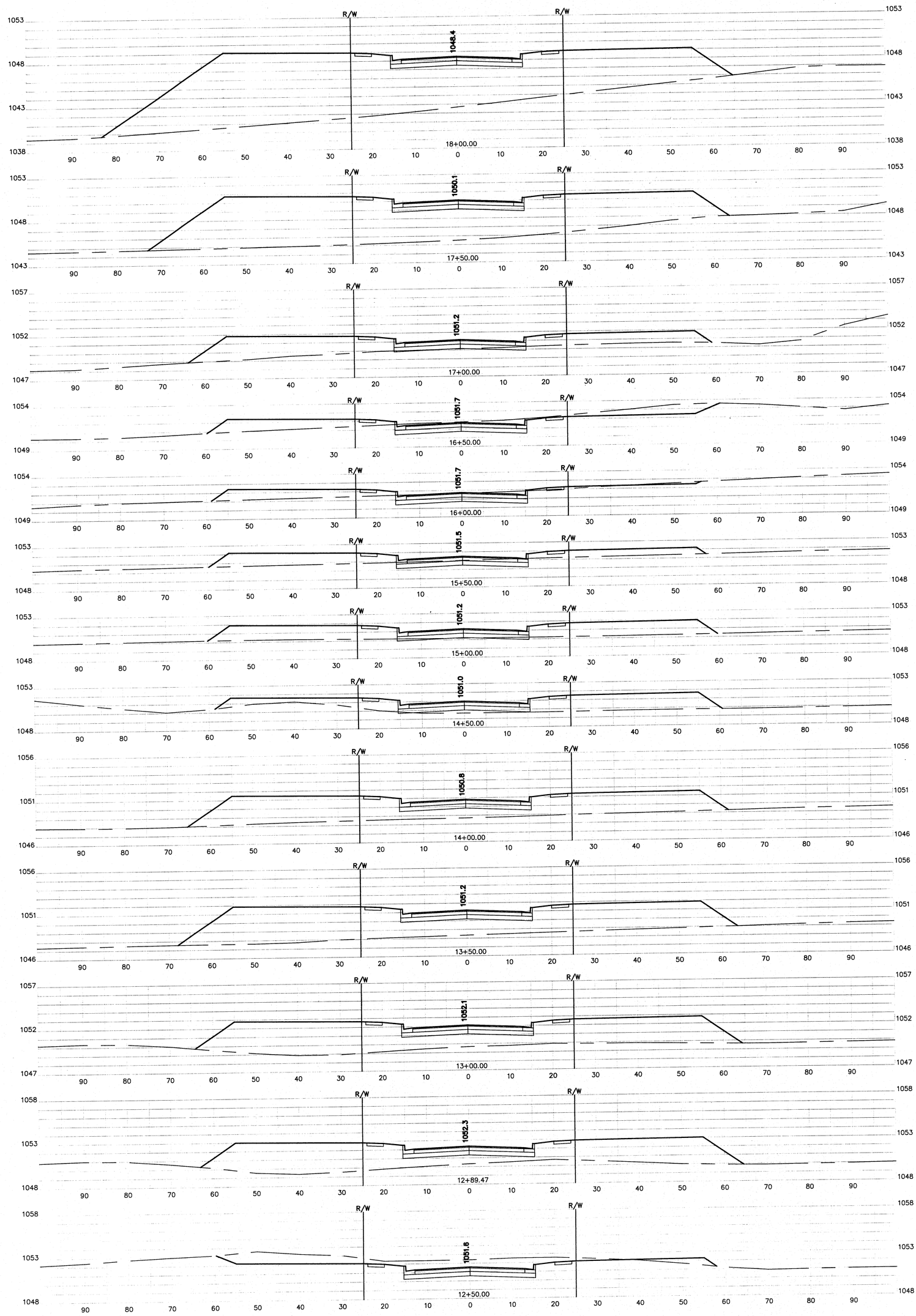

CROSS-SECTIONS -- MILLRACE ST. (STA. 12+50 TO STA. 18+00)

17/18

A.R.L.

A. R. LOCKHART DEVELOPMENT CO.
800 W. WATERLOO RD AKRON, OH 44314
Ph: 330-745-6520 Fax: 330-745-0716

PROJECT NUMBER

WESTBROOK ESTATES
PHASE III
CITY OF MASSILLON
COUNTY OF STARK, STATE OF OHIO

DATE: JULY, 2005
SCALE, H: 1" = 10'
SCALE, V: 1" = 5'
DESIGNER: J.S.S.
DRAFTER: J.S.S.

No.	DATE	REVISION	BY
3			
2			
1	4/1/07	REV. PER CITY COMMENTS	JSS

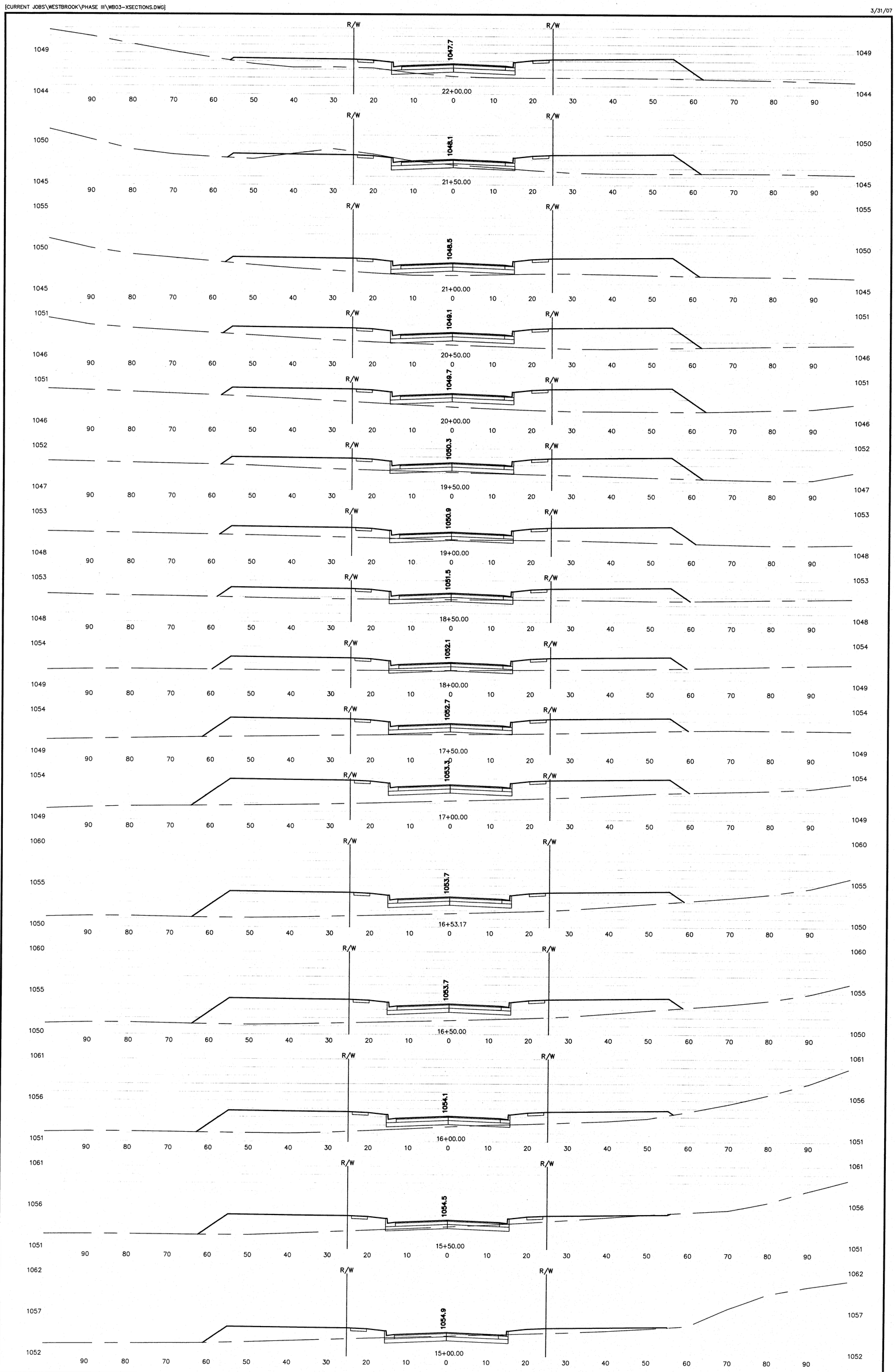

CROSS-SECTIONS -- ALPHA ST. (STA. 15+00 TO STA. 22+00)

18/18

A.R.L

A. R. LOCKHART DEVELOPMENT CO.
800 W. WATERLOO RD AKRON, OH 44314
Ph: 330-745-6520 Fax: 330-745-0716

PROJECT NUMBER

WESTBROOK ESTATES
PHASE III
CITY OF MASSILLON
COUNTY OF STARK, STATE OF OHIO

DATE: JULY, 2005	3			
SCALE: H: 1" = 10'	2			
DESIGNER: J.S.S.	No.	4/1/07	REV. PER CITY COMMENTS	JSS
DRAFTER: J.S.S.		DATE	REVISION	BY