Westbrook Estates Phase 5

CITY OF MASSILLON

STARK COUNTY, OHIO

66 LOTS , 22.6617 ACRES

PROJECT DESCRIPTION

NEW SUBDIVISION INCLUDING ROADWAY, STORM AND SANITARY SEWERS.

CONVENTIONAL SIGNS

RIGHT OF WAY	EXISTING: Ex R/W	, PROPOSED: PE-R/W		
COUNTY LINE				
TOWNSHIP LINE				
CORPORATION LINE				
FENCE LINE	EXISTING:	, PROPOSED:		
GUARDRAIL	EXISTING:	, PROPOSED:		
MANHOLES	EXISTING: (S)	, PROPOSED:	, REHABILITATED:	
CATCH BASINS	EXISTING:	, PROPOSED:	, REHABILITATED:	
SIGNS	1-POST:	, 2-POST:	, 3-POST:	, STREET:
EXISTING POLES	POWER:	, TELEPHONE	, LIGHT	, SPAN
PROPOSED POLES	POWER:	, TELEPHONE	, LIGHT	, SPAN
EXIST. UTILITIES	VALVE:	, HYDRANT:	, METERS:	, GUY:

PERMIT TO INSTALL

SANITARY SEWER PERMIT TO INSTALL (P.T.I.) HAS BEEN RECEIVED FROM THE OHIO ENVIROMENTAL PROTECTION AGENCY PROTECTION AGENCY THIS 25 DAY OF, January , 20 19 .

PTI No. 1256815

UNDERGROUND UTILITIES

TWO WORKING DAYS
BEFORE YOU DIG
CALL 1-800-362-2764 (TOLL FREE)
OHIO UTILITIES PROTECTION SERVICE
NON-MEMBERS
MUST BE CALLED DIRECTLY

TWO WORKING DAYS
BEFORE YOU DIG
1-800-925-0988 (TOLL FREE)
OIL @ GAS PRODUCERS UNDERGROUND
PROTECTION SERVICE



LOCATION MAP

PORTION TO BE IMPROVED

STREETS

PLAN PREPARED BY:

CIVPRO ENGINEERING, LLC
4450 Belden Village Street NW, Suite 800
Canton, Ohio 44718
(234) 410-3913

OWNER:

Lockhart Development Company
800 W Waterloo Rd
Akron, Ohio 44314
(330) 745-6520

KEITH A. DYLEWSKI, P.E., P.S.
CIVPRO ENGINEERING, LLC

STATE OF OHIO — KEITH A. DYLEWSKI — E-70907 — REGISTERED PROFESSIONAL ENGINEER

12/17/18
DATE

INDEX OF SHEETS:

TITLE SHEET	1
SCHEMATIC PLAN	2
CALCULATIONS	3-4
TYPICAL SECTION	5
GENERAL NOTE	6-8
PLAN AND PROFILE	9-18
CROSS SECTIONS	19-22
INTERSECTION DETAILS	23-26
SERVICE DETAILS	27
DRAINAGE DETAILS	28-30
SANITARY DETAILS	31
WATER LINE DETAILS	32-33
MASSILLON STANDARD DETAILS	34
SWP3 PLAN	35-40

TOTAL IMPROVEMENTS:

STREETS	3987.69	LF
SANITARY SEWER	2922	LF
STORM SEWER	3728	LF
WATER LINE	3487	LF

CITY OF MASSILLON ELECTED OFFICIALS

KATHY CATAZARO-PERRY	MAYOR
ANDREA SCASSA	LAW DIRECTOR/PROSECUTOR
JAYNE FERRERO	AUDITOR
MAUDE SLAGLE	TREASURER
COUNCIL	
CLAUDETTE O. ISTNICK	PRESIDENT
SARITA CUNNINGHAM	1st WARD
DAVID A. IRWIN	2nd WARD
MICHAEL L. GREGG	3rd WARD
JILL CREMER	4th WARD
MEGAN STARRETT	5th WARD
LINDA K. LITMAN	6th WARD
PAUL MANSON	AT LARGE
ED LEWIS IV	AT LARGE
MILAN CHOVAN	AT LARGE

APPROVALS

APPROVED BY:

CITY ENGINEER - JASON POPIEL, P.E. — 2/7/19 DATE

Letter Dated 11/6/18

STARK SOIL & WATER CONSERVATION DISTRICT - RICH ROHN — DATE

NW NE SW SE N

VERTICAL IN FEET: 100, 50, 0

0 50 100
HORIZONTAL SCALE IN FEET

CHECKED BY: KAD
DATE: July, 2018
DRAWN BY: BMH
DATE: July, 2018

REVISIONS: DESCRIPTION | DATE

Westbrook Estates Phase 5
Title Sheet
City of Massillon
Stark County, Ohio

CIVPRO ENGINEERING
ENGINEERS-SURVEYORS-CONSTRUCTION MANAGERS
4450 BELDEN VILLAGE STREET NW, SUITE 800 CANTON, OH 44718
PHONE: (330) 305-4744 FAX: (330) 305-4745 INFO@CIVPROENGINEERING.COM
WWW.CIVPROENGINEERING.COM

DRAWING NAME: Westbrook Ph5
REF NUMBER:

CENTERLINE

BRIGHTLEAF AVE NW
CURVE DATA
P.I. = 101+75.85
Δ = 6°24'29" LT.
R = 450'
T = 25.19'
L = 50.33'
P.C. = 101+50.66
P.T. = 102+00.99

STREET A
CURVE DATA
P.I. = 82+31.55
Δ = 42°27'46" LT.
R = 300'
T = 116.55'
L = 222.33'
P.C. = 81+15
P.T. = 83+37.33

DESCRIPTION	NORTH	EAST	DESCRIPTION	NORTH	EAST
ALPHA ST NW			BRIGHTLEAF AVE NW		
STA. 10+00	415138.3496	2219586.6939	STA. 99+06.51	415351.9485	2218862.2468
STA. 11+64.80	415303.0142	2219593.3631	STA. 100+00.13	415348.4714	2218955.8001
STA. 17+50	415888.7344	2219617.0858	STA. 101+75.85	415321.7997	2219129.5445
STA. 20+50	416187.4894	2219629.1859	STA. 103+50.00	415314.7501	2219303.6006
STA. 26+53.17	416790.1612	2219653.5952	STA. 106+40.00	415303.0142	2219593.3631
HALLE CIR. NW			STA. 108+14.20	415295.9645	2219767.4225
STA. 34+10.00	416203.2722	2219239.5054	LOCKHART CIR. NW		
STA. 32+50	416209.7472	2219079.6365	STA. 81+15.00	415429.6559	2219308.2545
CASEY CIR. NW			STA. 82+31.55	415546.1116	2219312.9712
STA. 59+50	415909.9929	2219067.4959	STA. 83+37.33	415635.2072	2219237.8304
STA. 61+16	415903.2752	2219233.3599	STA. 85+61.34	415806.4420	2219093.4156

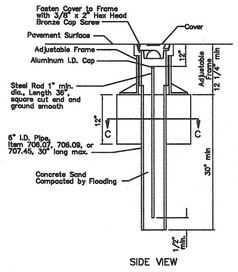

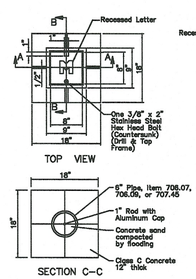

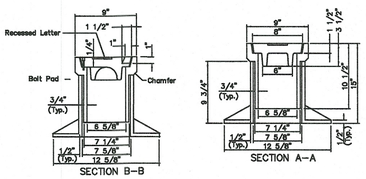

CENTERLINE MONUMENT DETAILS

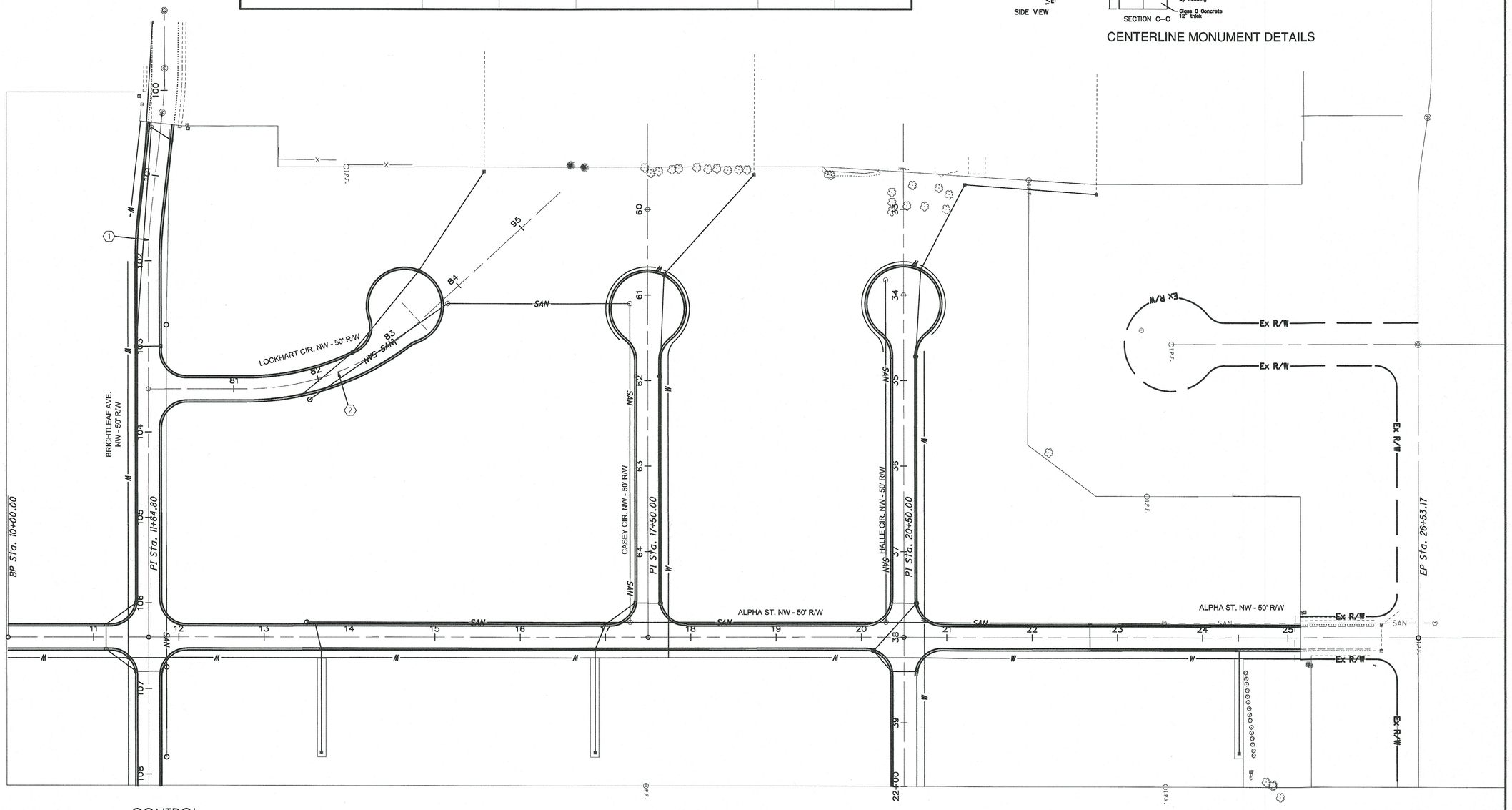
BRIGHTLEAF AVE. NW - 50' R/W
LOCKHART CIR. NW - 50' R/W
CASEY CIR. NW - 50' R/W
HALLE CIR. NW - 50' R/W
ALPHA ST. NW - 50' R/W
BP Sta. 10+00.00
PI Sta. 11+64.80
PI Sta. 17+50.00
PI Sta. 20+50.00
EP Sta. 26+53.17
SAN
NWS
M
W
Ex R/W
Ex R/W
Ex R/

ITEM 421-1 1/2" ASPHALT CONCRETE SURFACE COURSE, TYPE 1, PG 64-22(448)

ALPHA ST NW
STA. 10+00 TO STA. 11+19.8
(119.8*26)(0.125)/27 = 14.42 CY

STA. 11+19.8 TO STA. 12+09.8(INT)
(4883)(0.125)/27 = 22.61 CY

STA. 12+09.8 TO STA. 17+05
(495.2*26)(0.125)/27 = 59.61 CY

STA. 17+05 TO STA. 17+95
(3614.75)(0.125)/27 = 16.73 CY

STA. 17+95 TO STA. 20+05
(210*26)(0.125)/27 = 25.28 CY

STA. 20+05 TO STA. 20+95
(4883)(0.125)/27 = 22.61 CY

STA. 20+95 TO STA. 25+15.03
(420.03*26)(0.125)/27 = 50.55 CY

STREET A
CUL-DE-SAC
(6369.42)(0.125)/27 = 29.49 CY

STA. 34+70 TO STA. 37+55
(285*26)(0.125)/27 = 34.31 CY

STA. 38+45 TO STA. 39+50
(95*26)(0.125)/27 = 11.44 CY

STREET B
CUL-DE-SAC
(6369.42)(0.125)/27 = 29.49 CY

STA. 61+76 TO STA. 64+55
(279*26)(0.125)/27 = 33.58 CY

STREET C
STA. 80+45 TO STA. 82+55.19
(210.19*26)(0.125)/27 = 25.30 CY

CUL-DE-SAC
(7251.79)(0.125)/27 = 33.57 CY

BRIGHTLEAF AVE NW
STA. 100+26 TO STA. 103+05
(279)(26)(0.125)/27 = 33.58 CY

STA. 103+05 TO STA. 103+95
(3611.51)(0.125)/27 = 16.72 CY

STA. 103+95 TO STA. 105+95
(200)(26)(0.125)/27 = 24.07 CY

STA. 106+85 TO STA. 107+75
(90)(26)(0.125)/27 = 10.83 CY

TOTAL = 495 CY

ITEM 301-4 1/2" ASPHALT CONCRETE BASE

ALPHA ST NW
STA. 10+00 TO STA. 11+19.8
(119.8*26)(0.375)/27 = 43.26 CY

STA. 11+19.8 TO STA. 12+09.8(INT)
(4883)(0.375)/27 = 67.82 CY

STA. 12+09.8 TO STA. 17+05
(495.2*26)(0.375)/27 = 178.82 CY

STA. 17+05 TO STA. 17+95
(3614.75)(0.375)/27 = 50.20 CY

STA. 17+95 TO STA. 20+05
(210*26)(0.375)/27 = 75.83 CY

STA. 20+05 TO STA. 20+95
(4883)(0.375)/27 = 67.82 CY

STA. 20+95 TO STA. 25+15.03
(420.03*26)(0.375)/27 = 151.68 CY

STREET A
CUL-DE-SAC
(6369.42)(0.375)/27 = 88.46 CY

STA. 34+70 TO STA. 37+55
(285*26)(0.375)/27 = 102.92 CY

STA. 38+45 TO STA. 39+50
(95*26)(0.375)/27 = 34.31 CY

STREET B
CUL-DE-SAC
(6369.42)(0.375)/27 = 88.46 CY

STA. 61+76 TO STA. 64+55
(279*26)(0.375)/27 = 100.75 CY

STREET C
STA. 80+45 TO STA. 82+55.19
(210.19*26)(0.375)/27 = 75.90 CY

CUL-DE-SAC
(7251.79)(0.375)/27 = 100.72 CY

BRIGHTLEAF AVE NW
STA. 100+26 TO STA. 103+05
(279)(26)(0.375)/27 = 100.75 CY

STA. 103+05 TO STA. 103+95
(3611.51)(0.375)/27 = 50.16 CY

STA. 103+95 TO STA. 105+95
(200)(26)(0.375)/27 = 72.22 CY

STA. 106+85 TO STA. 107+75
(90)(26)(0.375)/27 = 32.50 CY

TOTAL = 1483 CY

ITEM 304-6" AGGREGATE BASE

ALPHA ST NW
STA. 10+00 TO STA. 11+19.8
(119.8*31)(0.5)/27 = 68.77 CY

STA. 11+19.8 TO STA. 12+09.8(INT)
(4372.72)(0.5)/27 = 99.49 CY

STA. 12+09.8 TO STA. 17+05
(495.2*31)(0.5)/27 = 284.28 CY

STA. 17+05 TO STA. 17+95
(4078.01)(0.5)/27 = 75.52 CY

STA. 17+95 TO STA. 20+05
(210*31)(0.5)/27 = 120.56 CY

STA. 20+05 TO STA. 20+95
(5372.72)(0.5)/27 = 99.49 CY

STA. 20+95 TO STA. 25+15.03
(420.03*31)(0.5)/27 = 241.13 CY

STREET A
CUL-DE-SAC
(7064.7)(0.5)/27 = 130.83 CY

STA. 34+70 TO STA. 37+55
(285*26)(0.5)/27 = 160.17 CY

STA. 38+45 TO STA. 39+50
(95*26)(0.5)/27 = 54.54 CY

STREET B
CUL-DE-SAC
(7064.7)(0.5)/27 = 130.83 CY

STA. 61+76 TO STA. 64+55
(279*26)(0.5)/27 = 160.17 CY

STREET C
STA. 80+45 TO STA. 82+55.19
(210.19*26)(0.5)/27 = 120.66 CY

CUL-DE-SAC
(8056.31)(0.5)/27 = 149.19 CY

BRIGHTLEAF AVE NW
STA. 100+26 TO STA. 103+05
(279)(31)(0.5)/27 = 160.17 CY

STA. 103+05 TO STA. 103+95
(4078.01)(0.5)/27 = 75.52 CY

STA. 103+95 TO STA. 105+95
(200)(31)(0.5)/27 = 114.81 CY

STA. 106+85 TO STA. 107+75
(90)(31)(0.5)/27 = 41.67 CY

TOTAL = 2302 CY

ITEM 407-TACK COAT (0.08 GAL./S.Y.)

ALPHA ST NW
STA. 10+00 TO STA. 11+19.8
(119.8*26)(1/9)(0.08) = 27.69 GAL

STA. 11+19.8 TO STA. 12+09.8(INT)
(4883)(1/9)(0.08) = 43.40 GAL

STA. 12+09.8 TO STA. 17+05
(495.2*26)(1/9)(0.08) = 114.45 GAL

STA. 17+05 TO STA. 17+95
(3614.75)(1/9)(0.08) = 32.13 GAL

STA. 17+95 TO STA. 20+05
(210*26)(1/9)(0.08) = 48.53 GAL

STA. 20+05 TO STA. 20+95
(4883)(1/9)(0.08) = 43.40 GAL

STA. 20+95 TO STA. 25+15.03
(420.03*26)(1/9)(0.08) = 97.07 GAL

STREET A
CUL-DE-SAC
(6369.42)(1/9)(0.08) = 56.62 GAL

STA. 34+70 TO STA. 37+55
(285*26)(1/9)(0.08) = 73.96 GAL

STA. 38+45 TO STA. 39+50
(95*26)(1/9)(0.08) = 24.65 GAL

STREET B
CUL-DE-SAC
(6369.42)(1/9)(0.08) = 56.62 GAL

STA. 61+76 TO STA. 64+55
(279*26)(1/9)(0.08) = 64.48 GAL

STREET C
STA. 80+45 TO STA. 82+55.19
(210.19*26)(1/9)(0.08) = 48.58 GAL

CUL-DE-SAC
(7251.79)(1/9)(0.08) = 64.46 GAL

BRIGHTLEAF AVE NW
STA. 100+26 TO STA. 103+05
(279)(26)(1/9)(0.08) = 64.48 GAL

STA. 103+05 TO STA. 103+95
(3611.51)(1/9)(0.08) = 32.10 GAL

STA. 103+95 TO STA. 105+95
(200)(26)(1/9)(0.08) = 46.22 GAL

STA. 106+85 TO STA. 107+75
(90)(26)(1/9)(0.08) = 20.8 GAL

TOTAL = 495 GAL

ITEM 408-PRIME COAT (0.40 GAL./S.Y.)

ALPHA ST NW
STA. 10+00 TO STA. 11+19.8
(119.8*31)(1/9)(0.4) = 165.06 GAL

STA. 11+19.8 TO STA. 12+09.8(INT)
(4372.72)(1/9)(0.4) = 238.79 GAL

STA. 12+09.8 TO STA. 17+05
(495.2*31)(1/9)(0.4) = 682.28 GAL

STA. 17+05 TO STA. 17+95
(4078.01)(1/9)(0.4) = 181.25 GAL

STA. 17+95 TO STA. 20+05
(210*31)(1/9)(0.4) = 289.33 GAL

STA. 20+05 TO STA. 20+95
(5372.72)(1/9)(0.4) = 238.79 GAL

STA. 20+95 TO STA. 25+15.03
(420.03*31)(1/9)(0.4) = 578.71 GAL

STREET A
CUL-DE-SAC
(7064.7)(1/9)(0.4) = 313.99 GAL

STA. 34+70 TO STA. 37+55
(285*26)(1/9)(0.4) = 392.67 GAL

STA. 38+45 TO STA. 39+50
(95*26)(1/9)(0.4) = 130.89 GAL

STREET B
CUL-DE-SAC
(7064.7)(1/9)(0.4) = 313.99 GAL

STA. 61+76 TO STA. 64+55
(279*26)(1/9)(0.4) = 384.40 GAL

STREET C
STA. 80+45 TO STA. 82+55.19
(210.19*26)(1/9)(0.4) = 289.60 GAL

CUL-DE-SAC
(8056.31)(1/9)(0.4) = 358.06 GAL

BRIGHTLEAF AVE NW
STA. 100+26 TO STA. 103+05
(279)(31)(1/9)(0.4) = 384.40 GAL

STA. 103+05 TO STA. 103+95
(4078.01)(1/9)(0.4) = 181.24 GAL

STA. 103+95 TO STA. 105+95
(200)(31)(1/9)(0.4) = 275.56 GAL

STA. 106+85 TO STA. 107+75
(90)(31)(1/9)(0.4) = 124.00 GAL

TOTAL = 5523 GAL

ITEM 609-CURB, TYPE 2

NW NE SW SE N

VERTICAL IN FEET: 1 .5 0

HORIZONTAL SCALE IN FEET: 1 .5 0

CHECKED BY: KAD
DATE: June, 2018
DRAWN BY: BMH
DATE: June, 2018

REVISIONS: DESCRIPTION | DATE

Westbrook Estates Phase 5
Calculations
City of Massillon
Stark County, Ohio

CIVPRO ENGINEERING
ENGINEERS-SURVEYORS-CONSTRUCTION MANAGERS
4450 BELDEN VILLAGE STREET NW, SUITE 800 CANTON, OH 44718
PHONE: (330) 268-1934 EMAIL: KJOHNSON@CIVPROENGINEERING.COM
WWW.CIVPROENGINEERING.COM

DRAWING NAME: WES-PavmntCalculations
REF NUMBER:

ITEM 609-CURB, TYPE 2

LEFT			
ALPHA ST NW			
STA. 10+00 TO STA. 11+19.8	=	119.8	LF
STA. 11+19.8 TO STA. 12+09.8(INT)	=	92.68	LF
STA. 12+09.8 TO STA. 20+05	=	495.2	LF
STA. 17+05 TO STA. 17+95	=	92.68	LF
STA. 17+95 TO STA. 20+05	=	210	LF
STA. 20+05 TO STA. 20+95	=	92.68	LF
STA. 20+95 TO STA. 25+15.03	=	420.03	LF
STREET A			
CUL-DE-SAC	=	140.23	LF
STA. 34+70 TO STA. 37+55	=	285	LF
STA. 38+45 TO STA. 39+50	=	95	LF
STREET B			
CUL-DE-SAC	=	140.23	LF
STA. 61+76 TO STA. 64+55	=	279	LF
STREET C			
STA. 80+45 TO STA. 82+55.19	=	210.19	LF
CUL-DE-SAC	=	192.90	LF
BRIGHTLEAF AVE NW			
STA. 100+26 TO STA. 103+05	=	279	LF
STA. 103+05 TO STA. 103+95	=	92.68	LF
STA. 103+95 TO STA. 105+95	=	200	LF
STA. 106+85 TO STA. 107+75	=	90	LF
RIGHT			
ALPHA ST NW			
STA. 10+00 TO STA. 11+19.8	=	119.8	LF
STA. 11+19.8 TO STA. 12+09.8(INT)	=	92.68	LF
STA. 12+09.8 TO STA. 20+05	=	795.2	LF
STA. 20+05 TO STA. 20+95	=	92.68	LF
STA. 20+95 TO STA. 25+15.03	=	420.03	LF
STREET A			
CUL-DE-SAC	=	140.23	LF
STA. 34+70 TO STA. 37+55	=	285	LF
STA. 38+45 TO STA. 39+50	=	95	LF
STREET B			
CUL-DE-SAC	=	140.23	LF
STA. 61+76 TO STA. 64+55	=	279	LF
STREET C			
STA. 80+45 TO STA. 82+55.19	=	210.19	LF
CUL-DE-SAC	=	192.90	LF
BRIGHTLEAF AVE NW			
STA. 100+26 TO STA. 103+05	=	279	LF
STA. 103+05 TO STA. 103+95	=	92.68	LF
STA. 103+95 TO STA. 105+95	=	200	LF
STA. 106+85 TO STA. 107+75	=	90	LF
RIGHT			
ALPHA ST NW			
STA. 10+00 TO STA. 11+19.8	=	119.8	LF
STA. 11+19.8 TO STA. 12+09.8(INT)	=	92.68	LF
STA. 12+09.8 TO STA. 20+05	=	795.2	LF
STA. 20+05 TO STA. 20+95	=	92.68	LF
STA. 20+95 TO STA. 25+15.03	=	420.03	LF
STREET A			
CUL-DE-SAC	=	140.23	LF
STA. 34+70 TO STA. 37+55	=	285	LF
STA. 38+45 TO STA. 39+50	=	95	LF
STREET B			
CUL-DE-SAC	=	140.23	LF
STA. 61+76 TO STA. 64+55	=	279	LF
STREET C			
STA. 80+45 TO STA. 82+55.19	=	210.19	LF
CUL-DE-SAC	=	131.27	LF
BRIGHTLEAF AVE NW			
STA. 100+26 TO STA. 105+95	=	569	LF
STA. 103+95 TO STA. 105+95	=	200	LF
STA. 106+85 TO STA. 107+75	=	90	LF
TOTAL	=	7187.61	LF

ITEM 605-4" SHALLOW PIPE UNDERDRAINS

LEFT			
ALPHA ST NW			
STA. 10+00 TO STA. 11+19.8	=	119.8	LF
STA. 11+19.8 TO STA. 12+09.8(INT)	=	92.68	LF
STA. 12+09.8 TO STA. 20+05	=	495.2	LF
STA. 17+05 TO STA. 17+95	=	92.68	LF
STA. 17+95 TO STA. 20+05	=	210	LF
STA. 20+05 TO STA. 20+95	=	92.68	LF
STA. 20+95 TO STA. 25+15.03	=	420.03	LF
STREET A			
CUL-DE-SAC	=	140.23	LF
STA. 34+70 TO STA. 37+55	=	285	LF
STA. 38+45 TO STA. 39+50	=	95	LF
STREET B			
CUL-DE-SAC	=	140.23	LF
STA. 61+76 TO STA. 64+55	=	279	LF
STREET C			
STA. 80+45 TO STA. 82+55.19	=	210.19	LF

DRAINAGE

ITEM 611 - 6" CONDUIT TYPE B	=	2024	LF
ITEM 611 - 12" CONDUIT TYPE B	=	1434	LF
ITEM 611 - 15" CONDUIT TYPE B	=	619	LF
ITEM 611 - 18" CONDUIT TYPE B	=	1675	LF
ITEM 611 - CATCH BASIN TYPE: REBAH.	=	3	EACH
ITEM 611 - CATCH BASIN TYPE: MASS-CB7030	=	19	EACH
ITEM 611 - CATCH BASIN TYPE: MASS-CBV5622	=	3	EACH
ITEM 611 - MANHOLE TYPE: MASS 1056	=	1	EACH
ITEM 611 - MANHOLE TYPE: MASS-MH7030	=	13	EACH

SANITARY

ITEM 611 - 6" CONDUIT TYPE B	=	2383	LF
ITEM 611 - 8" CONDUIT TYPE B	=	2922	LF
ITEM 611 - MANHOLE: TYPE: MASS-1056-AGS-R	=	1	EACH
ITEM 611 - MANHOLE: TYPE: MASS-1056-AGS	=	10	EACH

WATER

ITEM 638 - Class 52 DIP (Polyethylene Wrap)	=	3487	LF
ITEM 638 - Fire Hydrany Assembly	=	9	EACH
ITEM 638 - 8" Gate Valve W/Box	=	16	EACH
ITEM 638 - 8" Blow Off Assembly	=	4	EACH
ITEM 638 - 2" Blow Off Assembly	=	3	LF
ITEM 638 - 8" Service Saddle - 1" Taper Thread	=	53	EACH
ITEM 638 - 2" Service Saddle - 1" Taper Thread	=	13	EACH
ITEM 638 - 2" Type K Copper	=	415	LF
ITEM 638 - 1" Curb Stop & Box	=	66	EACH
ITEM 638 - 1" Type K Copper Service Line	=	2205	LF
ITEM 638 - 8" x 8" Cross	=	3	EACH

NW NE SW SE

VERTICAL IN FEET 1 .5 0

HORIZONTAL SCALE IN FEET 1 .5 0

CHECKED BY: KAD

DATE: June, 2018

DRAWN BY: BMH

DATE: June, 2018

REVISIONS: DATE | DESCRIPTION

Westbrook Estates Phase 5
Calculations
City of Massillon
Stark County, Ohio

CIVPRO ENGINEERING
ENGINEERS-SURVEYORS-CONSTRUCTION MANAGERS
4450 BELDEN VILLAGE STREET, SUITE 207 CANTON, OH 44718
PHONE: (330) 268-1314 EMAIL: KAUK@CIVPROENGINEERING.COM
WWW.CIVPROENGINEERING.COM

DRAWING NAME: M65-PermitCalculations

REF. NUMBER:

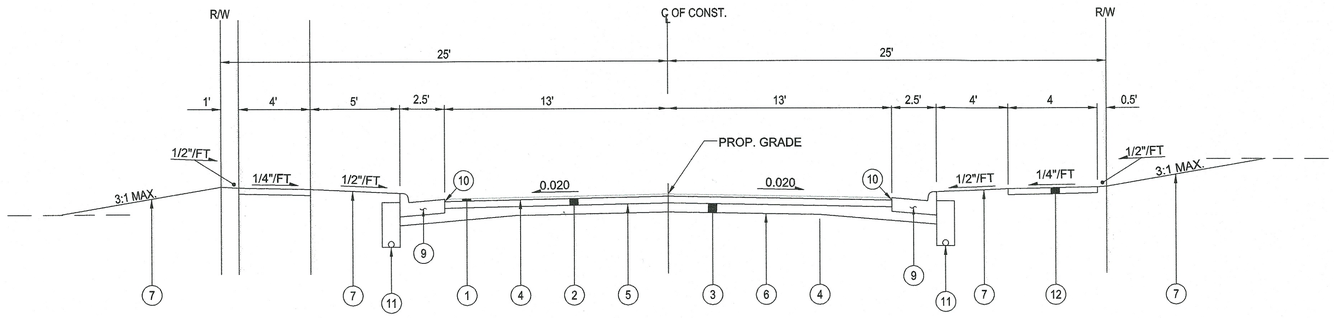

30' PAVEMENT - TYPICAL SECTION

ALPHA ST. NW - STA. 10+00 TO STA. 25+15.03
BRIGHTLEAF AVE NW - STA. 100+26 TO STA. 107+75
LOCKHART CIR NW - STA. 80+00 TO STA. 83+37.33
HALLE CIR NW - STA. 34+10 TO STA. 39+40
CASEY CIR. NW - STA. 61+16 TO STA. 65+00

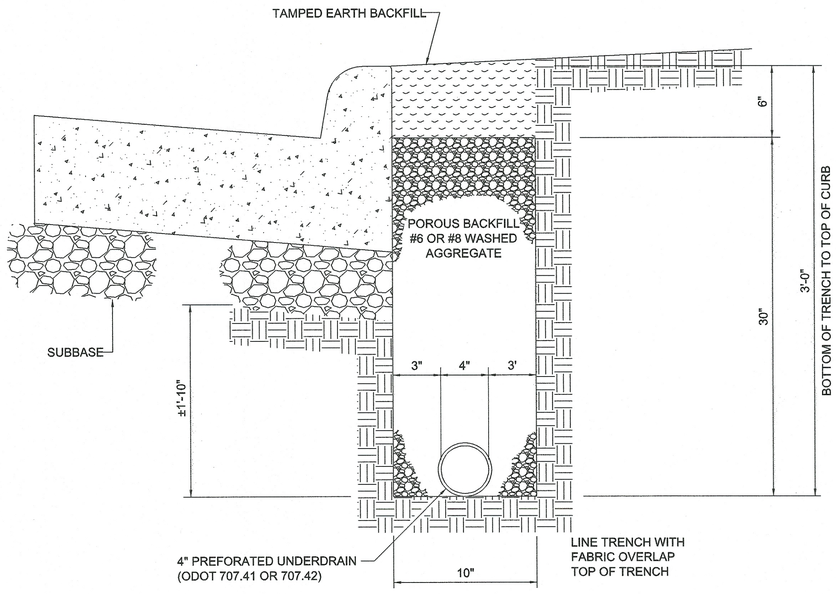

ITEM 605-4" SHALLOW PIPE UNDERDRAINS

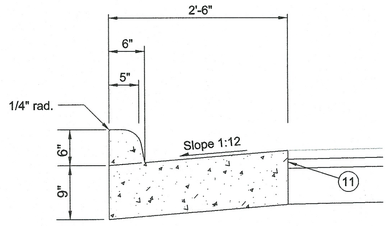

ITEM 609-CURB, TYPE 2

PROPOSED LEGEND

(1) - ITEM 448-1 1/2" ASPHALT CONCRETE SURFACE COURSE, TYPE 1, PG 64-22
(2) - ITEM 301-4 1/2" ASPHALT CONCRETE BASE
(3) - ITEM 304-6" AGGREGATE BASE
(4) - ITEM 407-TACK COAT (0.08 GAL./S.Y.)
(5) - ITEM 408-PRIME COAT (0.40 GAL./S.Y.)
(6) - ITEM 204-SUBGRADE COMPACTION
(7) - ITEM 659-SEEDING AND MULCHING
(8) - ITEM 609-CURB, TYPE 2
(10) - ITEM 705-HOT APPLIED JOINT SEALER(REQUIRED)
(11) - ITEM 605-4" SHALLOW PIPE UNDERDRAINS
(12) - ITEM 608-4"CONCRETE WALK (6" CONCRETE WALK @ DRIVEWAYS)
SIDEWALK TO BE CONSTRUCTED BY INDIVIDUAL LOT OWNER

NW NE SW SE

VERTICAL IN FEET 1 .5 0

HORIZONTAL SCALE IN FEET 1 .5 0

CHECKED BY: KAD
DATE: July, 2018
DRAWN BY: BMH
DATE: July, 2018

REVISIONS:

DESCRIPTION	DATE

West Brook Estates Phase 5
Typical Section
City of Massillon
Stark County, Ohio

CIVPRO ENGINEERING
ENGINEERS-SURVEYORS-CONSTRUCTION MANAGERS
6450 BELDEN VILLAGE STREET NW, SUITE 800 CANTON, OH 44718
PHONE: (330) 268-3734 EMAIL: KADAVIS@CIVPROENGINEERING.COM
WWW.CIVPROENGINEERING.COM

DRAWING NAME: Typical Sect
REF NUMBER:

* THE FOLLOWING NOTES ARE CITY OF MASSILLON STANDARD NOTES AND MAY NOT BE APPLICABLE TO ALL PROJECTS.

UTILITIES

LISTED BELOW ARE ALL KNOWN UTILITIES LOCATED WITHIN THE PROJECT CONSTRUCTION LIMITS TOGETHER WITH THEIR RESPECTIVE OWNERS:

AT&T
50 W. BOWERY, 6TH FLOOR
AKRON, OH. 44308
888-901-2779

AQUA WATER
870 THIRD STREET NW
MASSILLON, OH. 44647
JACOB FLANARY
(330) 832-5764 EXT. 50650

OHIO EDISON
STARK DIVISION
2600 S ERIE ST.
(800) 633-4766

MASSILLON CABLE
P.O. BOX 814
MASSILLON, OH. 44646
(330) 760-3930

GREAT LAKES
104 6TH ST SW
CANTON, OH. 44702
(330) 456-2454

CITY OF MASSILLON
SANITARY SEWER
151 LINCOLN WAY EAST
MASSILLON, OH 44646
(330) 830-1722

AT&T COMMUNICATIONS
2535 E. 40TH AVE.
DENVER, CO 80205-3601
(800) 852-3786

DOMINION EAST OHIO GAS COMPANY
4725 SOUTHWAY ST SW
CANTON, OH 44706
(330) 478-1700

NORTHEAST OHIO NATURAL GAS CORP.
9081 S.R. 250
STRASBURG, OH. 44680-9766
(330) 878-5589

THE CONTRACTOR SHALL NOTIFY ALL UTILITIES 48 HOURS PRIOR TO WORK.

THE LOCATION OF THE UNDERGROUND UTILITIES SHOWN ON THE PLANS ARE SHOWN AT APPROXIMATE LOCATIONS AND WHERE OBTAINED AS REQUIRED FROM THE OWNERS AS REQUIRED BY SECTION 153.64 OF THE OHIO REVISED CODE.

OUPS - 1-800-362-2764
OGUPUPS - 1-800-925-0988

DATUM ELEVATION

ALL BENCHMARKS ARE BASED ON REFERENCE BENCHMARKS PROVIDED BY THE CITY OF MASSILLON

STATIONING

ALL STATIONING SHOWN IS REFERENCED TO THE BASELINE AS SHOWN.

NOTIFICATION OF SAFETY FORCES AND BUS GARAGES

THE CONTRACTOR SHALL NOTIFY ALL AGENCY LISTED BELOW AT LEAST 48 HOURS IN ADVANCE OF ANY STREET CLOSING OR TRAFFIC CHANGE.

MASSILLON SAFETY SERVICE
330-830-1702

MASSILLON FIRE DEPARTMENT
330-833-1053

PERRY TOWNSHIP HALL
330-833-2141

NORTH LAWRANCE FIRE DEPT
330-832-6347

TUSCARAWAS TOWNSHIP HALL
330832-4337

JACKSON FIRE DEPARTMENT
330-832-1553

MASSILLON POLICE DEPARTMENT
330-830-1735

MASSILLON SCHOOL BUS GARAGE
330-830-1849

JACKSON TOWNSHIP HALL
330-832-7416

PERRY FIRE DEPARTMENT
330478-5121

JACKSON POLICE DEPARTMENT
330-497-7440

JACKSON SCHOOL BUS GARAGE
330-830-8042

PERRY POLICE DEPARTMENT
330-833-3865

PERRY SCHOOL BUS GARAGE
330-477-1300

STARK COUNTY SHERIFF
330-430-3887

TUSCARAWAS SCHOOL BUS GARAGE
330-837-7805

SARTA
330-454-5333

SUBSURFACE CONDITIONS

IT IS THE OBLIGATION AND RESPONSIBILITY OF THE CONTRACTOR TO MAKE HIS OWN INVESTIGATION OF SUBSURFACE CONDITIONS PRIOR TO SUBMITTING THEIR BID. PROSPECTIVE BIDDERS ARE TO COORDINATE WITH THE OWNER FOR ACCESS TO THE SITE FOR INSPECTIONS AND EXPLORATORY EXCAVATION. THE BIDDER SHALL CONTACT THE OWNER AT LEAST 72 HOURS IN ADVANCE OF THE DESIRED INSPECTION OR EXCAVATION. THE BIDDER SHALL CONTACT O.U.P.S. AND OBTAIN LOCATIONS OF OTHER UTILITIES.

QUANTITIES

QUANTITIES ARE INDICATED FOR COMPARISON OF BIDS ONLY. IT SHALL BE THE RESPONSIBILITY OF THE CONTRACTOR TO VERIFY QUANTITIES BEFORE ORDERING MATERIALS. VARIATIONS FROM THE PLAN QUANTITIES SHALL BE APPROVED BY THE CITY OF MASSILLON ENGINEER BEFORE MATERIAL ORDERS ARE PLACED. MATERIALS REJECTED DUE TO INCOMPATIBILITY BETWEEN ORDERED QUANTITIES AND FIELD CONDITIONS SHALL BE REPLACED AT THE CONTRACTOR'S EXPENSE.

CONSTRUCTION SPECIFICATIONS & STANDARDS

ALL CONSTRUCTION IS TO BE COMPLETED ACCORDING TO THE CURRENT CITY OF MASSILLON SPECIFICATIONS AND STANDARDS, AND THE LATEST EDITION OF THE STATE OF OHIO DEPARTMENT OF TRANSPORTATION CONSTRUCTION AND MATERIAL SPECIFICATIONS. WHEN A CONFLICT ARISES BETWEEN THE CITY OF MASSILLON AND ODOT'S STANDARDS, THE MORE STRINGENT STANDARD WILL BE USED AT THE DISCRETION OF THE CITY OF MASSILLON ENGINEER. THE CONTRACTOR SHALL FOLLOW ALL OSHA AND ADA REGULATIONS AND REQUIREMENTS.

PRESERVATION OF EXISTING UTILITY SERVICES

ANY EXISTING WATER LINE, SANITARY SEWER, STORM SEWER, GAS LINE OR OTHE UTILITY IN OR OUTSIDE OF THE CONSTRUCTION LIMITS, DAMAGED DURING CONSTRUCTION OF THE PROPOSED PROJECT SHALL BE REPLACED AT THE CONTRACTORS EXPENSE.

CONTRACTOR AVAILABILITY

THE CONTRACTOR SHALL SUPPLY THE ENGINEER WITH A 24 HOUR PHONE NUMBER WHERE THE CONTRACTOR SHALL BE AVAILABLE FOR EMERGENCIES.

PRESERVATION OF PRIVATE PROPERTY

THE CONTRACTOR SHALL PERFORM WORK AS TO NOT DISTURB, DAMAGE OR DESTROY ANY TELEPHONE OR POWER POLES, SIGNS, LANDSCAPING ITEMS, ETC., ANY ITEM DAMAGED OR DESTROYED SHALL BE REPLACED AT THE CONTRACTOR'S EXPENSE AND ANY ITEM DISTURBED OR IN CONFLICT WITH THE WORK TO BE PERFORMED SHALL BE REMOVED AND RESET AT THE CONTRACTOR'S EXPENSE. PRIOR ENGINEER APPROVAL IS REQUIRED BEFORE ANY OF THE ABOVE ITEMS ARE PERFORMED.

ACCESSIBILITY TO PRIVATE PROPERTY

ACCESS TO ALL DRIVEWAYS AND PARKING AREAS WITHIN THE PROJECT LIMITS SHALL BE MAINTAINED AT ALL TIMES. THE TRENCH SHALL BE BACKFILLED AT THE END OF EACH WORK DAY TO PROVIDE ACCESS. THE CONTRACTOR MUST NOTIFY EACH PROPERTY OWNER AT LEAST 24 HOURS IN ADVANCE OF CUTTING THEIR DRIVEWAY.

WORK LIMITS

THE WORK LIMITS SHOWN ON THESE PLANS ARE FOR PHYSICAL CONSTRUCTION ONLY. THE CONTRACTOR SHALL PROVIDE FOR THE INSTALLATION AND OPERATION OF ALL WORK ZONE TRAFFIC CONTROL AND WORK ZONE TRAFFIC CONTROL DEVICES REQUIRED BY THESE PLANS WHETHER INSIDE OR OUTSIDE THESE WORK LIMITS.

PROFILE AND ALIGNMENT

THE PROPSED PAVEMENT RESURFACING SHALL FOLLOW THE ALIGNMENT AND PROFILE OF THE EXISTING PAVEMENT. THE PROPOSED ASPHALT CONCRETE OVERLAY SHALL BE AS SHOWN ON THE TYPICAL SECTIONS.

GRADING AND FILLING OPERATIONS

THE PLACEMENT OF COMPACTED AGGREGATE SHALL NOT EXTEND PAST THE EXISTING GRADED SHOULDERS. NO EXCAVATION, GRADING, OR FILLING OPERATIONS SHALL BE PERFORMED IN ANY WETLANDS OR STREAMS, UNLESS THE REQUIRED STATE AND/OR FEDERAL PERMITS HAVE BEEN OBTAINED IN ACCORDANCE WITH ALL APPLICABLE STATE AND/OR FEDERAL LAWS AND REGULATIONS. UNDER NO CIRCUMSTANCES SHALL THE CONTRACTOR STORE EQUIPMENT AND/OR MATERIALS IN ANY WETLANDS OR STREAMS.

CLEARING AND GRUBBING

ALTHOUGH THERE ARE NO TREES OR STUMPS SPECIFICALLY MARKED FOR REMOVAL WITHIN THE LIMITS OF THE PROJECT. A LUMP SUM QUANTITY HAS BEEN INCLUDED IN THE BID FORM FOR ITEM201SPEC, CLEARING AND GRUBBING. THIS ITEM SHALL INCLUDE ALL PROVISIONS AS SET FORTH IN THE 2008 ODOT SPECIFICATIONS. REMOVAL ITEMS MAY INCLUDE TREES, STUMPS, AND BRUSH AS DETERMINED BY THE CITY ENGINEER.

ALL PROVISIONS AS SET FORTH IN THE SPECIFICATIONS UNDER THIS ITEM SHALL BE INCLUDED IN THE LUMP SUM PRICE BID FOR ITEM 201SPEC, CLEARING AND GRUBBING.

PRESERVATION OF PROPERTY CORNERS AND SURVEY MARKERS

THE CONTRACTOR SHALL PRESERVE ALL CORNERSTONES, IRON PINS, CONCRETE MONUMENTS AND ANY TYPE OF LAND MONUMENT. HE SHALL HAVE ALL LAND MONUMENTS IN THE PROXIMITY OF THE WORK REFERENCED. HE SHALL REPLACE DESTROYED OR DAMAGED MONUMENTS AND SHAL FURNISH A CERTIFICATION BY AN OHIO REGISTERED SURVEYOR THAT THE MONUMENTS HAVE BEEN RESTORED.

REMOVAL AND RELOCATION OF EXISTING UTILITIES

THE CONTRACTOR IS REQUIRED TO COOPERATE WITH EACH RESPECTIVE UTILITY OWNER FOR THE REMOVAL AND RELOCATION OF ANY AND ALL UTILITIES THAT CREATE A CONFLICT WITH CONSTRUCTION OF THE PROJECT.

CROSSING OR CONNECTING TO EXISTING PIPES AND UTILITIES

WHERE THE PLANS PROVIDE FOR A PROPOSED CONDUIT TO BE CONNECTED TO, OR CROSS OVER OR UNDER AN EXISTING SEWER OR UNDERGROUND UTILITY, THE CONTRACTOR SHALL LOCATE THE EXISTING PIPES OR UTILITIES BOTH AS TO LINE AND GRADE BEFORE STARTING TO LAY THE PROPOSED CONDUIT.

IF IT IS DETERMINED THAT THE ELEVATION OF THE EXISTING CONDUIT, OR EXISTING APPURTENANCE TO BE CONNECTED, DIFFERS FROM THE PLAN ELEVATION OR RESULTS IN A CHANGE IN THE PLAN CONDUIT SLOPE, THE CITY OF MASSILLON ENGINEER SHALL BE NOTIFIED BEFORE STARTING CONSTRUCTION OF ANY PORTION OF THE PROPOSED CONDUIT WHICH WILL BE AFFECTED BY THE VARIANCE IN THE EXISTING ELEVATIONS.

PAYMENT FOR THE OPERATIONS DESCRIBED ABOVE SHALL BE INCLUDED IN THE CONTRACT PRICE FOR THE PERTINENT 603 CONDUIT ITEM.

REVIEW OF SANITARY AND DRAINAGE FACILITIES

AN INSPECTION OF ALL EXISTING SEWERS WHICH ARE TO REMAIN IN SERVICE AND WHICH MAY BE AFFECTED BY THE WORK SHALL BE COMPLETED BEFORE AND AFTER WORK HAS COMMENCED. FINAL ACCEPTANCE BY THE CITY OF MASSILLON WILL NOT OCCUR UNTIL AFTER SAID INSPECTION. THE CONDITION OF THE EXISTING CONDUITS AND THEIR APPURTENANCES SHALL BE DETERMINED FROM FIELD OBSERVATIONS. RECORDS OF THE OBSERVATIONS SHALL BE PROVIDED IN WRITING BY THE CONTRACTOR TO THE CITY OF MASSILLON.

ALL NEW CONDUITS, INLETS, CATCH BASINS, AND MANHOLES CONSTRUCTED AS A PART OF THE PROJECT SHALL BE FREE OF ALL FOREIGN MATTER AND IN A CLEAN CONDITION BEFORE THE PROJECT WILL BE ACCEPTED BT THE CITY OF MASSILLON.

ALL EXISTING SEWERS INSPECTED INITIALLY BY THE ABOVE MENTIONED PARTIES SHALL BE MAINTAINED AND LEFT IN A CONDITION REASONABLY COMPARABLE TO THAT DETERMINED BY THE ORIGINAL INSPECTION. ANY CHANGE IN THE CONDITION RESULTING FROM THE CONTRACTOR'S OPERATIONS SHALL BE CORRECTED BY THE CONTRACTOR TO THE SATISFACTION OF THE ENGINEER.

PAYMENT FOR ALL OPERATIONS DESCRIBED ABOVE SHALL BE INCLUDED IN THE CONTRACT PRICE FOR THE PERTINENT 603 CONDUIT ITEMS.

ITEM 407, TACK COAT

THE RATE OF APPLICATION OF THE 407 TACK COAT SHALL BE SUBJECT TO ADJUSTMENT AS DIRECTED BY THE ENGINEER. QUANTITIES INDICATE AN AVERAGE APPLICATION RATE OF 0.08 GALLONS PER SQUARE YARD OF TACK COAT FOR ESTIMATING PURPOSES ONLY.

ITEM 408, BITUMINOUS PRIME COAT

THE RATE OF APPLICATION OF THE 408 PRIME COAT SHALL BE SUBJECT TO ADJUSTMENT AS DIRECTED BY THE ENGINEER. QUANTITIES INDICATE AN AVERAGE APPLICATION RATE OF 0.40 GALLONS PER SQUARE YARD OF PRIME COAT FOR ESTIMATING PURPOSES ONLY.

ITEM 659, TOPSOIL, SEEDING AND MULCHING

ITEM 659 SHALL BE APPLIED TO ALL EXPOSED SOIL AREAS DISTURBED DURING CONSTRUCTION. SUCH AS SPECIFIED IN ITEM 659 AND IS NOT LIMITED TO JUST TOPSOIL, SEEDING AND MULCHING.

THE CITY SHALL APPROVE SEED MIX PRIOR TO APPLICATION TO BE USED THROUGHOUT CONSTRUCTION LIMITS.

ITEM 603SPEC - PIPE CLEANOUT

THIS WORK SHALL CONSIST OF REMOVING SEDIMENT AND DEBRIS FROM THE EXISTING CONDUITS SPECIFIED IN THE FIELD. ALL MATERIAL REMOVED SHALL BE DISPOSED OF AS PER 203.05. ALL SEWERS SHALL BE CLEANED OUT TO THE SATISFACTION OF THE ENGINEER.

CLEANOUT OF THE PIPE SHALL BE PAID FOR AT THE UNIT PRICE BID FOR ITEM SPECIAL - PIPE CLEANOUT. THIS PRICE SHALL INCLUDE THE COST FOR MATERIAL, EQUIPMENT, LABOR, AND ALL INCIDENTALS REQUIRED TO COMPLETE THE CLEANOUT.

CONDITIONS OF WORK

ALL WORK PERFORMED UNDER THIS CONTRACT SHALL COMPLY WITH THE U.S. DEPARTMENT OF LABOR, OCCUPATIONAL SAFETY AND HEALTH ACT, STATE, COUNTY, AND CITY OF MASSILLON LAWS AND REGULATIONS. ALL WORK, AT ALL TIMES SHALL BE SUBJECT TO OBSERVATION BY THE CITY OF MASSILLON ENGINEER AND/OR HIS REPRESENTATIVE. ALL WORK SHALL COMPLY WITH THE CONDITIONS OF THE CONTRACT DOCUMENTS AND OHIO EPA, AND STANDARDS OF THE CITY OF MASSILLON. ALL ELECTRICAL WORK SHALL COMPLY WITH THE NATIONAL ELECTRICAL CODE, AND APPLICABLE CITY, COUNTY, STATE AND FEDERAL CODES.

IT SHALL BE THE RESPONSIBILITY OF THE CONTRACTOR TO MAINTAIN SAFE AND SATISFACTORY ACCESS TO ALL ABUTTING PROPERTIES TO THE PROJECT SITE. ADJACENT ROADS SHALL BE MAINTAINED AND KEPT CLEAN OF MUD AND OTHER DEBRIS THAT MAY BE CAUSED BY TRAFFIC EXITING THE WORK SITE. THE CONTRACTOR SHALL COORDINATE AND PROVIDE FOR ALL NECESSARY TRAFFIC CONTROL. TRAFFIC CONTROL SHALL FOLLOW THE MORE STRINGENT GUIDELINES OF THE CITY OF MASSILLON OR ODOT AT THE DESCREATION OF THE CITY OF MASSILLON ENGINEER.

IT SHALL BE THE RESPONSIBILITY OF THE CONTRACTOR TO PROVIDE AND MAINTAIN FACILITIES FOR A CONSTRUCTION OFFICE, EMPLOYEE PARKING, AND EMPLOYEE SANITARY FACILITIES. ON STREET PARKING WILL NOT BE PERMITTED. THE CONTRACTOR SHALL PROVIDE FOR THE LAWFUL OFF-SITE DISPOSAL OF DEMOLITION DEBRIS AND CONSTRUCTION WASTE.

NW NE SW SE

VERTICAL INCH FEET 1 .5 0

HORIZONTAL SCALE IN FEET 1 .5 0

CHECKED BY: KAD
DATE: June, 2018
DRAWN BY: BMH
DATE: June, 2018

REVISIONS: DESCRIPTION | DATE

Westbrook Estates Phase 5
General Notes
City of Massillon
Stark County, Ohio

CIVPRO ENGINEERING
ENGINEERS-SURVEYORS-CONSTRUCTION MANAGERS
4450 BELDEN VILLAGE STREET NW, SUITE 800 CANTON, OH 44718
PHONE: (330) 268-3734 EMAIL: KADA@CIVPROENGINEERING.COM
WWW.CIVPROENGINEERING.COM

DRAWING NAME: WBS-GN2
REF NUMBER:

RESTORATION

FOR SANITARY SEWER INSTALLED, TESTED, AND ACCEPTED UP TO MAY 15TH OF ANY CALENDAR YEAR, RESTORATION SHALL BE COMPLETE BY JUNE 30th OF THAT YEAR. FOR INSTALLATION OF SANITARY SEWER TESTED AND ACCEPTED FROM MAY 15th TO SEPTEMBER 30th OF ANY CALANDAR, YEAR RESTORATION SHALL BE COMPLETE BY NOVEMBER 15th OF THAT CALENDAR YEAR. FOR SANITARY SEWER INSTALLED, TESTED, AND ACCEPTED AFTER NOVEMBER 15TH OF ANY CALENDAR YEAR. RESTORATION SHALL BE COMPLETE BY MAY 15th OF THE NEXT CALENDAR YEAR. THAT CALENDAR YEAR. FOR SANITARY SEWER INSTALLED, TESTED, AND ACCEPTED AFTER NOVEMBER 15TH OF ANY CALENDAR YEAR. RESTORATION SHALL BE COMPLETE BY MAY 15th OF THE NEXT CALENDAR YEAR.

ALL SOIL AREAS DISTURBED BY THE CONTRACTOR SHALL BE TOPSOILED, SEEDED AND MULCHED. COST TO BE INCLUDED IN THE UNIT PRICE BID FOR EACH ITEM OF AFFECTED WORK. TOPSOIL, SEEDING AND MULCHING SHALL NOT BE A SEPARATE PAY ITEM. THIS INCLUDES BACKFILLING, SEEDING AND MULCHING ALONG THE EDGE OF ALL PAVEMENT RESTORATION.

CONTRACTOR TO REPLACE ALL PAVEMENT MARKINGS. COST TO BE INCLUDED IN THE UNIT PRICE BID FOR PAVEMENT.

CONTRACTOR TO USE HOT APPLIED JOINT CRACK SEALER ON ASPHALT PAVEMENT AT ALL ENDS AND INTERSECTIONS.

CONTRACTOR'S EQUIPMENT - OPERATION STORAGE

A QUALIFIED FLAGGER SHALL BE EMPLOYED WHERE THE CONTRACTOR'S EQUIPMENT MUST MERGE WITH THE TRAFFIC STREAM. THE CONTRACTOR'S EQUIPMENT SHALL BE EQUIPPED WITH AT LEAST ONE AMBER FLASHING LIGHT. THE EQUIPMENT SHALL BE STORED AT A STORAGE AREA OUTSIDE THE R/W. THE LOCATION OF WHICH SHALL HAVE PRIOR APPROVAL OF THE ENGINEER. WHEN PARKING ALONG THE HIGHWAY, THE EQUIPMENT SHALL BE PLACED AND DELINEATED AS PER 614.03. NO EQUIPMENT SHALL BE PARKED IN THE MEDIAN OF THE HIGHWAY. ADEQUATE BARRICADE AND LIGHTS SHALL BE PLACED ON THE PAVEMENT SIDE OF THE EQUIPMENT TO IDENTIFY THE LIMITS OF THE EQUIPMENT. ALL OTHER EQUIPMENT, INCLUDING PRIVATE VEHICLES, SHALL BE STORED AT THE APPROVED CONTRACTOR'S STORAGE AREA. NO EQUIPMENT SHALL BE PARKED ON PRIVATE PROPERTY UNLESS PRIOR APPROVAL OF THE OWNER AND THE PROJECT ENGINEER/SUPERVISOR HAS BEEN GRANTED.

EXISTING DATA

EACH CONTRACTOR SHALL VISIT THE SITE PERSONALLY TO ASCERTAIN THE NATURE OF THE WORK AND BECOME THOROUGHLY FAMILIARIZED WITH THE SITE PRIOR TO BID SUBMISSION.

EXISTING STRUCTURES, GRADES, PIPING, ETC. ARE INDICATED IN APPROXIMATE LOCATION ON THE PLAN. INFORMATION SHOWN IS NOT GUARANTEED TO BE CORRECT AND COMPLETE. THE DATA SHALL BE VERIFIED IN THE FIELD BY THE CONTRACTOR. THE EXISTENCE OF FACILITIES ABOVE OR BELOW GROUND, WHICH MAY NOT BE SHOWN, WILL NOT BE A BASIS FOR A CLAIM FOR EXTRA WORK.

EXISTING UNDERGROUND UTILITIES SHOWN ARE RECORDS PROVIDED BY UTILITY COMPANIES AND ARE APPROXIMATE ONLY. SERVICE LATERALS ARE NOT SHOWN.

IT IS THE RESPONSIBILITY OF CONTRACTOR TO NOTIFY THE CITY, PRIOR TO BID OPENING OF NON-CONFORMING OR CONFLICTING INFORMATION.

EXCAVATED MATERIAL

ALL EXCAVATED MATERIAL AND ALL MATERIAL USED IN CONSTRUCTION OF THE WORK SHALL BE PILED AND STORED IN A MANNER THAT WILL NOT ENDANGER THE WORK AND THAT WILL LEAVE DRIVEWAYS OR OTHER CONTROLS UNOBSTRUCTED AND ACCESSIBLE WHILE THE WORK IS TO BE COMPLETED. SATISFACTORY PROVISIONS SHALL BE MADE FOR STREET DRAINAGE, AND NATURAL WATERCOURSES SHALL NOT BE OBSTRUCTED. DURING THE PROGRESS OF THE WORK, ALL MATERIAL PILES SHALL BE KEPT TRIMMED UP AND MAINTAINED IN A NEAT MANNER. ALL EXCAVATED WASTE MATERIAL SHALL BE REMOVED FROM THE PROJECT SITE, AS DIRECTED BY THE ENGINEER. THE WASTE SITE IS TO BE PROVIDED BY THE CONTRACTOR AT NO COST TO THE CITY, UNLESS OTHERWISE NOTED IN THE SPECIFICATIONS ALONG WITH A LETTER FROM THE PROPOSED WASTE SITE OWNER SITE, AS DIRECTED BY THE ENGINEER. THE WASTE SITE IS TO BE PROVIDED BY THE CONTRACTOR AT NO COST TO THE CITY, PERMITTING SUCH AND HOLDING THE CITY HARMLESS.

DOWN SPOUTS

ALL DOWN SPOUTS UNABLE TO BE CONNECTED TO THE STORM LATERAL SHALL BE CORE DRILLED THROUGH THE CURB AS PER ENGINEER'S DIRECTION.

CURB OPENING SHALL NOT GREATER THAN A 3 1/2" DIAMETER.

THE WORK ABOVE SHALL BE INCLUDED IN THE CONTRACT PRICE FOR ITEM 609.

WORKING AREA

NO EXCAVATION WITH SIDE SLOPES STEEPER THAN 2:1 AND/OR DEEPER THAN 2' WILL BE PERMITTED. OPEN CASTINGS AND PIPES SHALL BE LEFT SECURED WHEN THE SITE IS UNATTENDED BY THE CONTRACTOR. THE CONTRACTOR SHALL SECURE ALL SUCH EXCAVATIONS, OPEN CASTINGS AND PIPES AGAINST UNAUTHORIZED ENTRY COVERING WITH STEEL PLATES, TEMPORARY BACK FILLING, FENCING AND SECURITY SERVICES SHALL BE INCLUDED IN THE PRICE BID FOR THE WORK. PLATES, TEMPORARY BACK FILLING, FENCING AND SECURITY SERVICES SHALL BE INCLUDED IN THE PRICE BID FOR THE WORK.

ITEM 207SPEC EROSION CONTROL

THE CONTRACTOR SHALL PREPARE AND SUBMIT A STORM WATER POLLUTION CONTROL PLAN TO THE CITY OF MASSILLON ENGINEER TO BE FORWARDED TO THE APPROPRIATE PERMITTING AGENCIES. SAID PLAN MUST COMPLY WITH THE MOST CURRENT RULES AND REGULATIONS OF THE CITY OF MASSILLON.

THE CONTRACTOR SHALL BE RESPONSIBLE FOR CONSTRUCTING AND MAINTAINING STORM WATER POLLUTION CONTROL PLAN 24 HOURS A DAY FOR THE DURATION OF THIS PROJECT. ALL DEVICES (SILT FENCE, INLET PROTECTION, ROCK CHANNEL, ETC.) SHALL BE FURNISHED, ERECTED, MAINTAINED, AND REMOVED BY THE CONTRACTOR.

THIS WORK SHALL BE INCLUDED IN THE LUMP SUM PRICE FOR ITEM 207SPEC - EROSION CONTROL

CONDITIONS OF WORK

ALL WORK PERFORMED UNDER THIS CONTRACT SHALL COMPLY WITH THE U.S. DEPARTMENT OF LABOR, OCCUPATIONAL SAFETY AND HEALTH ACT, STATE, COUNTY, AND CITY OF MASSILLON LAWS AND REGULATIONS. ALL WORK, AT ALL TIMES SHALL BE SUBJECT TO OBSERVATION BY THE OWNER AND/OR ENGINEER. ALL WORK SHALL COMPLY WITH THE CONDITIONS OF THE CONTRACT DOCUMENTS, OHIO EPA, AND STANDARDS OF THE CITY OF MASSILLON. ALL ELECTRICAL WORK SHALL COMPLY WITH THE NATIONAL ELECTRICAL CODE, AND APPLICABLE CITY, COUNTY, STATE AND FEDERAL CODES.

IT SHALL BE THE RESPONSIBILITY OF THE CONTRACTOR TO MAINTAIN SAFE AND SATISFACTORY ACCESS TO ALL ABUTTING PROPERTIES TO THE PROJECT SITE. ADJACENT ROADS SHALL BE MAINTAINED AND KEPT CLEAN OF MUD AND OTHER DEBRIS THAT MAY BE CAUSED BY TRAFFIC EXITING THE WORK SITE. THE CONTRACTOR SHALL COORDINATE AND PROVIDE FOR ALL NECESSARY TRAFFIC CONTROL. TRAFFIC CONTROL SHALL BE IN ACCORDANCE WITH CURRENT CITY OF MASSILLON RULES AND REGULATIONS AND THE OHIO MANUAL OF UNIFORM TRAFFIC CONTROL DEVICES.

IT SHALL BE THE RESPONSIBILITY OF THE CONTRACTOR TO PROVIDE AND MAINTAIN FACILITIES FOR A CONSTRUCTION OFFICE, EMPLOYEE PARKING, AND EMPLOYEE SANITARY FACILITIES. ON STREET PARKING WILL NOT BE PERMITTED. THE CONTRACTOR SHALL PROVIDE FOR THE LAWFUL OFF-SITE DISPOSAL OF DEMOLITION DEBRIS AND CONSTRUCTION WASTE.

REMOVAL OF TREES OR STUMPS

ALL TREES AND STUMPS REMOVED DURING CONSTRUCTION SHALL BE UNDER THE LUMP SUM BID FOR ITEM 201, CLEARING AND GRUBBING. THIS SHALL INCLUDE ALL TREES AND STUMPS WITHIN THE CONSTRUCTION LIMITS UNLESS OTHERWISE STATED BY CITY REPRESENTATIVE.

CONCRETE REMOVAL

ALL EXISTING CONCRETE INCLUDING CURBS, DRIVES, AND BASE ETC. WITHIN WORK LIMITS SHALL BE REMOVED AND PAID FOR UNDER:

ITEM 203 EXCAVATION INCLUDING ROADWAY

ITEM 614SPEC MAINTAINING TRAFFIC

THE CONTRACTOR SHALL BE RESPONSIBLE FOR DESIGNING AND MAINTAINING SAFE AND EFFECTIVE TRAFFIC CONTROL 24 HOURS A DAY FOR THE DURATION OF THIS PROJECT. ALL TRAFFIC CONTROL DEVICES (PAVEMENT MARKINGS, SIGNS, BARRELS, CONES, ETC.) SHALL BE FURNISHED, ERECTED, MAINTAINED, AND REMOVED BY THE CONTRACTOR.

THE CONTRACTOR SHALL DEVISE A MAINTENANCE OF TRAFFIC SCHEME WHICH SHALL BE STAMPED BY A PROFESSIONAL ENGINEER, AND PRESENT IT TO THE ENGINEER FOR APPROVAL. THE MAINTENANCE OF TRAFFIC SCHEME SHALL PRESENT, IN GENERAL, THE METHOD FOR CONDUCTING THE REQUIRED WORK IN A SAFE AND EFFICIENT MANNER.

THE PLANS SHALL INCLUDE THE FOLLOWING COMPONENTS:

PLAN VIEW AT AN APPROPRIATE SCALE TO SHOW:
- WORK AREA
- BEGIN/END STATIONING OF TAPERS, TEMPORARY MARKINGS, ETC.
- TEMPORARY PAVEMENT
- LOCATIONS OF SIGNS (EXISTING OVERHEAD SIGNS AND ALL PROPOSED, COVERED, OR MODIFIED SIGNS)
- LOCATIONS OF TYPICAL SECTIONS
- REFERENCES TO APPLICABLE STANDARD DRAWINGS

TYPICAL SECTIONS SHOWING:
- LANE WIDTHS, PAVEMENT MARKINGS, DRUMS, PCB, ETC.
- LIMITING STATIONS
- WORK AREA AND DROP-OFFS

SIGN DETAILS FOR PROPOSED SIGNS AND OVERLAYS/MODIFACATIONS

THE MAINTENANCE OF TRAFFIC SCHEME SHALL BE IN CONFORMANCE WITH THE OHIO MANUAL OF UNIFORM TRAFFIC CONTROL DEVICES, LATEST REVISION, THE REFERENCED STANDARD CONSTRUCTION DRAWINGS INCLUDING DESIGNER NOTES, THE CONSTRUCTION AND MATERIAL SPECIFICATIONS (CMS), POLICY NO. 516-003(P) TRAFFIC MANAGEMENT IN WORK ZONES INTERSTATE AND OTHER FREEWAYS, ODOT LOCATION AND DESIGN MANUAL, VOLUME 1, AND ALL REQUIREMENTS DETAILED IN THESE PLANS.

THIS SUBMITTAL SHALL CONSIST OF THREE (3) COPIES OF THE PLANS FOR REVIEW AND DISTRIBUTION. NO WORK SHALL BEGIN AT THE LOCATION UNTIL THE MAINTENANCE OF TRAFFIC PLANS HAVE BEEN APPROVED BY THE CITY OF MASSILLON ENGINEER.

THE PROGRESS SCHEDULE WILL BE REQUIRED TO APPROVE THE MAINTENANCE OF TRAFFIC PLANS. THIS SCHEDULE OF OPERATIONS SHALL DETAIL THE CONTRACTOR'S WORK ACTIVITIES AND HIS METHODS OF MAINTAING TRAFFIC DURING THESE ACTIVITIES. MAINTENANCE OF TRAFFIC PLANS SHALL BE PREPARED AND SUBMITTED TO THE CITY OF MASSILLON ENGINEER FOR APPROVAL. THESE PLANS SHALL BE SEALED BY A REGISTERED PRFESSIONAL ENGINEER. THE CITY SHALL HAVE 14 CALENDAR DAYS TO REVIEW AND COMMENT ON THESE PLANS. THE CONTRACTOR SHALL NOT BEGIN ANY WORK REQUIRING TRAFFIC CONTROL UNTIL THE ENGINEER HAS GIVEN APPROVAL OF THE CONTRACTOR'S SEQUENCE OF OPERATIONS AND MAINTENANCE OF TRAFFIC PLANS.

THE MAINTENANCE OF TRAFFIC SCHEME SHALL TAKE INTO CONSIDERATION SNOW AND ICE OPERATIONS FROM DECEMBER 1 THROUGH MARCH 31. LANE SHIFTS, RESTRICTIONS, AND CLOSURES MAY NOT BE APPROVED IF THEY ADVERSELY AFFECT SNOW REMOVAL OPERATIONS.

THIS WORK SHALL BE INCLUDED IN THE LUMP SUM PRICE FOR ITEM 614 - MAINTAINING TRAFFIC, AS PER PLAN.

FINAL APPROVAL

A VIDEO IN THE FORM OF DVD WILL BE MADE BY THE CONTRACTOR AND SUBMITTED TO THE CITY OF MASSILLON ENGINEER PRIOR TO THE PROJECT COMMENCING. AFTER THE FINAL INVOICE IS SUBMITTED THE SITE SHALL BE VIDEOED AGAIN BY THE CONTRACTOR. ANY DISCREPANCIES WILL BE RESOLVED PRIOR TO FINAL PAYMENT. AS BUILT DRAWINGS SHALL BE CREATED BY THE CONTRACTOR AND SUBMITTED TO THE CITY OF MASSILLON ENGINEER IN A CLEAR AND LEGENDABLE MANNER PRIOR TO FINAL INVOICE.

COST OF THIS WORK SHALL BE INCLUDED IN ITEM 623 CONSTRUCTION STAKING

SANITARY SEWER SPECIFICATIONS

SANITARY GRAVITY SEWER PIPE AND FITTINGS SHALL BE PVC SDR 35 CONFORMING TO ASTM D-3034. PVC COMPOUNDS SHALL CONFORM TO ASTM D-2321 PVC PIPE AND FITTINGS SHALL HAVE BELL AND SPIGOT TYPE JOINTS CONFORMING TO ASTM D-3212 AND GASKETS CONFORMING TO ASTM C-923

BACKFILL IN SEWER TRENCHES SHALL CONFORM TO ODOT ITEM 603.10 AND BE PLACED IN LAYERS SUFFICIENT TO MEET THE COMPACTION REQUIREMENT OF 100% OF MAXIMUM LABORATORY DRY DENSITY PER ASTM D-698 AND THOROUGHLY COMPACTED WITH MACHINE MOUNDED COMPACTION EQUIPMENT. THE PLACING OF BACKFILL MATERIAL SHALL BE CONTINUED UNTIL THE TRENCH IS ENTIRELY FILLED AND COMPACTED WITH THE APPROVED GRANULAR MATERIAL TO THE GRADE CALLED FOR ON THE CONTRACT DRAWINGS. EXCAVATED MATERIAL CONFORMING TO ODOT ITEM 203 SHALL BE USED FOR BACKFILLING EXISTING STRUCTURES (AFTER REMOVAL) ONLY. CRUSHED GRAVEL CONFORMING TO GRADATION REQUIREMENTS OF ODOT ITEM 304 OR APPROVED EQUAL AS SHOWN IN ODOT TABLE 703-1 SHALL BE USED FOR BACKFILLING ALL SEWER TRENCH AREAS SHOWN ON THE PLANS AND AS DIRECTED BY THE CITY OF MASSILLON ENGINEER. FLOODING, JETTING, OR PUDDLING OF BACKFILL MATERIAL WILL NOT BE PERMITTED UNLESS APPROVED BY THE CITY OF MASSILLON ENGINEER. COMPACTION TESTING OF THE BACKFILL BY A GEOTECHNICAL ENGINEER MAY BE REQUIRED BY THE OWNER AT THE EXPENSE OF THE CONTRACTOR.

SANITARY SEWERS SHALL BE AIR TESTED FOR LEAKAGE AND MANDREL TESTED FOR DEFLECTION. THE MAXIMUM ALLOWABLE PIPE DEFLECTION SHALL BE 5%.

PRIOR TO FINAL PAYMENT FOR AND ACCEPTANCE OF SANITARY SEWER INSTALLATION THE RESULTS OF THE AIR PRESSURE TESTS, TELEVISION TESTS AND MADREL TESTS SHALL BE FORWARDED TO THE CITY OF MASSILLON ENGINEER.

DEFLECTION TESTING

MAXIMUM ALLOWABLE PIPE DEFLECTION (REDUCTION IN VERTICAL INSIDE DIAMETER) SHALL BE 5%. DEFLECTION TESTS OF PIPE SHALL BE PERFORMED NOT SOONER THAN 30 DAYS AFTER THE BACKFILL HAS BEEN PROPERLY PLACED AND BEFORE FINAL ACCEPTANCE. LOCATIONS WITH EXCESS DEFLECTION SHALL BE EXCAVATED AND REPAIRED BY RE-BEDDING OR REPLACEMENT OF THE PIPE AT THE CONTRACTOR'S EXPENSE. DEVICES FOR TESTING INCLUDE A DEFLECTOMETER METER, OR PROPERLY SIZED (60, NO-GO) MANDREL OR SEWER BALL.THE DEFLECTION TESTING MUST BE CONDUCTED WITHOUT MECHANICAL PULLING DEVICES. FOR THE PURPOSE OF DEFLECTION MEASUREMENTS, THE BASE INSIDE PIPE DIAMETERS WITHOUT DEFLECTION ARE PROVIDED IN TABLE A. THE MAXIMUM ALLOWABLE DEFLECTION SHALL BE APPLIED TO THE BASE INSIDE DIAMETER IN DETERMINING THE MINIMUM PERMISSIBLE DIAMETER. IT MUST BE EMPHASIZED THAT TO INSURE ACCURATE TESTING, THE LINES MUST BE THOROUGHLY CLEANED.

TABLE A
INSIDE DIAMETERS FOR DEFLECTION MEASUREMENTS
OF ASTM D 3034 SDR 35 / SDR 21 PVC SEWER PIPE

SIZE	SDR	AVG. O.D.	BASE I.D.	DEFLECTION MANDREL
6"	35	6.275	5.742	5.54
8"	35	8.400	7.665	7.28
10"	35	10.500	9.563	9.08
12"	35	12.500	11.361	10.79

NW NE SW SE

VERTICAL IN FEET 1 .5 0

HORIZONTAL SCALE IN FEET 1 .5 0

CHECKED BY: KAD
DATE: June, 2018
DRAWN BY: BMH
DATE: June, 2018

REVISIONS:

DATE	DESCRIPTION

Westbrook Estates Phase 5
General Notes
City of Massillon
Stark County, Ohio

CIVPRO ENGINEERING
ENGINEERS-SURVEYORS-CONSTRUCTION MANAGERS
4450 BELDEN VILLAGE STREET NW, SUITE 800 CANTON, OH 44718
PHONE: (330) 268-3724 EMAIL: KADMOVPROENGINEERING.COM
WWW.CIVPROENGINEERING.COM

DRAWING NAME: WB5-GN2
REF NUMBER:

TELEVISION TESTING

ALL SANITARY SEWERS, 8-INCH DIAMETER AND LARGER, MUST PASS AN INTERNAL TELEVISION INSPECTION. THE CONTRACTOR SHALL PROVIDE A COMPLETE INTERNAL INSPECTION DVD TO THE CITY OF MASSILLON ENGINEERING DEPARTMENT. THE RECORDING PROCEDURE SHALL BE IN ACCORDANCE WITH CITY OF MASSILLON ENGINEERING DEPARTMENT STANDARDS.

LEAKAGE TESTS

LEAKAGE TESTS SHALL BE PERFORMED WHICH MAY INCLUDE APPROPRIATE WATER OR LOW PRESSURE AIR TESTING. THE TESTING METHODS SELECTED SHOULD TAKE INTO CONSIDERATION THE RANGE IN GROUNDWATER ELEVATIONS DURING THE TEST AND ANTICIPATED DURING THE DESIGN LIFE OF THE SEWER COMPLETED AND ACCEPTED.

WATER (HYDROSTATIC) TEST

THE LEAKAGE EXFILTRATION OR INFILTRATION SHALL NOT EXCEED 100 GALLONS PER INCH OF PIPE DIAMETER PER MILE PER DAY [9L/(MM OF PIPE DIAMETER KM D)] FOR ANY SECTION OF THE SYSTEM. AN EXFILTRATION OR INFILTRATION TEST SHALL BE PERFORMED WITH A MINIMUM POSITIVE HEAD OF 2 FEET (0.6 M).

AIR TESTING AS PER ASTM F1417

AIR TESTING WILL BE CONDUCTED AS THE PROJECT IS BEING CONSTRUCTED. AT NO TIME WILL MORE THAN 900 FEET OF PIPE BE INSTALLED BEFORE AIR TESTING IS PERFORMED. SEWAGE WILL NOT BE DIVERTED TO ANY SECTION OF PIPE, REGARDLESS OF LENGTH, UNTIL ALL TESTING IS COMPLETED AND ACCEPTED.

AFTER BACKFILLING A MANHOLE TO MANHOLE REACH OF SANITARY SEWER LINE, THE CONTRACTOR SHALL, AT HIS EXPENSE, CONDUCT THE LINE ACCEPTANCE TESTS. THE TESTS SHALL BE PERFORMED ACCORDING TO THE STATED PROCEDURES AND UNDER THE SUPERVISION OF THE CITY OF MASSILLON ENGINEER OR HIS REPRESENTATIVE.

EQUIPMENT USED SHALL MEET THE FOLLOWING MINIMUM REQUIREMENTS AND BE APPROVED BY THE CITY OF MASSILLON ENGINEER:

1: PNEUMATIC PLUGS SHALL HAVE A SEALING LENGTH EQUAL TO OR A GREATER THAN THE DIAMETER OF THE PIPE BEING INSPECTED.
2: PNEUMATIC PLUGS SHALL RESIST INTERNAL TEST PRESSURES WITHOUT REQUIRED EXTERNAL BRACING OR BLOCKING.
3: ALL AIR USED SHALL PASS THROUGH A SINGLE CONTROL PANEL.
4. THREE INDIVIDUAL HOSES SHALL BE USED FOR THE FOLLOWING CONNECTIONS:
   a. FROM CONTROL PANEL TO PNEUMATIC PLUGS FOR INFLATION.
   b. FROM CONTROL PANEL TO SEALED LINE FOR INTRODUCING THE LOW PRESSURE AIR.
   c. FROM SEALED LINE TO CONTROL PANEL FOR CONTINUALLY MONITORING AIR PRESSURE RISE IN THE SEALED LINE.

ALL PNEUMATIC PLUGS SHALL BE SEAL TESTED BEFORE BEING USED IN THE ACTUAL TEST INSTALLATION. ONE LENGTH OF PIPE SHALL BE LAID ON THE GROUND AN SEALED AT BOTH ENDS WITH THE PNEUMATIC PLUGS TO BE CHECKED. THE SEALED PIPE SHALL BE PRESSURED TO 5 PSIG. THE PLUGS MUST HOLD AGAINST THIS PRESSURE WITHOUT HAVING TO BE BRACED.

AFTER A MANHOLE TO MANHOLE REACH OF PIPE HAS BEEN BACKFILLED AND CLEANED, AND THE PNEUMATIC PLUGS ARE CHECKED BY THE ABOVE PROCEDURE, THE PLUGS SHALL BE PLACED IN THE LINE AT EACH MANHOLE. LOW PRESSURE AIR SHALL BE SLOWLY INTRODUCED INTO THIS SEALED LINE UNTIL THE INTERNAL AIR PRESSURE REACHES APPROXIMATELY 4 PSIG.

AT LEAST TWO MINUTES SHALL BE ALLOWED FOR THE AIR PRESSURE TO STABILIZE. WHEN THE PRESSURE HAS STABILIZED AND IS AT OR ABOVE 3.5 PSIG, THE AIR HOSE FROM THE CONTROL PANEL TO THE AIR SUPPLY SHALL BE DISCONNECTED. THE PORTION OF THE LINE BEING TESTED SHALL BE TERMED "ACCEPTABLE" IF THE TIME REQUIRED IN MINUTES FOR THE PRESSURE TO DECREASE FROM 3.5 TO 2.5 PSIG (GREATER THEN THE AVERAGE BACK PRESSURE OF ANY GROUNDWATER THAT MAY BE OVER THE PIPE) SHALL NOT BE LESS THAN THE TIME SHOWN FOR THE GIVEN DIAMETERS IN THE FOLLOWING TABLE:

PIPE DIAMETER IN.	MINIMUM TIME MINUTES	LENGTH FOR MINUTES TIME, FT.	TIME FOR LONGER LENGTH, S	SPECIFICATION TIME LENGTH (L) SHOWN, MINUTES							
				100 FT.	150 FT.	200 FT.	250 FT.	300 FT.	350 FT.	400 FT.	450 FT.
4	3:46	597	0.380 L	3:46	3:46	3:46	3:46	3:46	3:46	3:46	3:46
6	5:40	398	0.854 L	5:40	5:40	5:40	5:40	5:40	5:40	5:42	6:24
8	7:34	298	1.520 L	7:34	7:34	7:34	7:36	7:36	8:52	10:08	11:24
10	9:26	239	2.374 L	9:26	9:26	9:26	9:53	11:52	13:51	15:49	17:48
12	11:20	198	3.416 L	11:20	11:20	11:24	14:15	17:05	19:56	22:47	25:38
15	14:10	159	6.342 L	14:10	14:10	17:46	22:15	26:42	31:09	35:36	40:04
18	17:0	133	7.692 L	17:00	19:13	25:38	32:09	38:27	44:52	51:16	57:41
21	19:50	114	10.470 L	19:50	26:10	36:54	43:37	52:21	XX:XX	69.48	78:31
24	22:40	99	13.674 L	22:47	34:11	45:34	56:58	68:22	76:46	91:10	102:33
27	25:30	88	17.306 L	28:51	43:16	57:41	72:07	86:32	100:57	115:22	129:48
30	28:20	80	21.366 L	35:37	53:25	71:13	89:02	106:50	124:38	142:26	160:15
33	31:10	72	25.852 L	49:05	64:38	86:10	107:43	129:16	150:43	172:21	193:53
36	34:00	66	30.768 L	51:17	76:55	102:34	128:12	153:50	170.29	205:07	230:46

IN AREAS WHERE GROUND WATER IS KNOWN TO EXIST, THE CONTRACTOR SHALL INSTALL A 1/2 INCH DIAMETER CAPPED PIPE NIPPLE APPROXIMATELY 10 INCHES LONG, THROUGH THE MANHOLE WALL ON TOP OF ONE OF THE SANITARY SEWER LINES ENTERING THE MANHOLE. THIS SHALL BE DONE AT THE TIME THE SANITARY SEWER LINE IS INSTALLED. IMMEDIATELY PRIOR TO THE PERFORMANCE OF THE LINE ACCEPTABILITY TEST, THE GROUND WATER SHALL BE DETERMINED BY REMOVING THE PIPE CAP, BLOWING AIR THROUGH THE PIPE NIPPLE IN THE GROUND SO AS TO CLEAR IT, AND THEN CONNECTING A CLEAR PLASTIC TUBE TO THE NIPPLE. THE PLASTIC TUBE SHALL BE VERTICAL AND A MEASUREMENT OF THE HEIGHT, IN FEET OF WATER OVER THE INVERT OF THE PIPE, SHALL BE TAKEN AFTER THE WATER HAS STOPPED RISING IN THIS PLASTIC TUBE. THE HEIGHT, IN FEET OF WATER OVER THE INVERT OF THE PIPE, SHALL BE TAKEN AFTER THE WATER HAS STOPPED RISING IN THIS PLASTIC TUBE. AIR TEST PRESSURE IS TO BE INCREASED BY 0.433 PSI FOR EACH FOOT THE GROUND WATER IS ABOVE THE INVERT OF THE SEWER LINE BEING TESTED. THE ALLOWABLE DROP OF ONE POUND AND THE TIMING OF THE TEST REMAIN THE SAME.

IF A LINE ACCEPTABILITY TEST IS BEING CONDUCTED ON MORE THAN ONE MANHOLE REACH OF PIPE, THE ENTIRE SECTION BEING TESTED SHALL MEET THE LINE ACCEPTABILITY REQUIREMENTS AS IF ONLY ONE (1) OF THE MANHOLE REACHES IN THE SECTION WERE BEING TESTED.

NEGATIVE AIR PRESSURE (VACUUM) TESTING OF MANHOLES AS PER ASTM C-1244

PREPARATION OF THE MANHOLE:

A. ALL LIFT HOLES SHALL BE PLUGGED

B. ALL PIPES ENTERINGTHE MANHOLE SHALL BE TEMPORARILY PLUGGED, TAKING CARE TO SECURELY BRACE THE PIPE AND PLUGS TO PREVENT THEM FROM BEING DRAWN INTO THE MANHOLE

PROCEDURE:

A. THE TEST HEAD SHALL BE PLACED AT THE TOP OF THE MANHOLE IN ACCORDANCE WITH THE MANUFACTURER'S RECOMMENDATIONS.

B. A VACUUM OF 10 IN. OF MERCURY SHALL BE DRAWN ON THE MANHOLE, THE VALVE ON THE VACUUM LINE OF THE TEST HEAD CLOSED, AND THE VACUUM PUMP SHUT OFF. THE TIME SHALL BE MEASURED FOR THE VACUUM TO DROP TO 9 IN OF MERCURY.

C. THE MANHOLE SHALL PASS IF THE TIME FOR THE VACUUM READING TO DROP FROM 10 IN. OF MERCURY TO 9 IN. OF MERCURY MEETS OR EXCEEDS THE VALUES I INDICATED IN TABLE BELOW.

DEPTH (FT)	MINIMUM TEST TIMES FOR MANHOLES								
	DIAMETER, IN.								
	30	33	36	42	48	54	60	66	72
	TIME, IN SECONDS								
8	11	12	14	17	20	23	26	29	33
10	14	15	18	21	25	29	33	36	41
12	17	18	21	25	30	35	39	43	49
14	20	21	25	30	35	41	46	51	57
16	22	24	39	34	40	46	52	58	67
18	25	27	32	38	45	52	59	65	73
20	28	30	35	42	50	53	65	72	81

CLEAN WATER STATEMENT

ROOF DRAINS, FOUNDATION DRAINS, AND OTHER CLEAN WATER CONNECTIONS TO THE SANITARY SEWER ARE PROHIBITED.

COMMENCING. AFTER THE FINAL INVOICE IS SUBMITTED THE SITE SHALL BE VIDEOED AGAIN BY THE CONTRACTOR. ANY DISCREPANCIES WILL BE RESOLVED PRIOR TO FINAL PAYMENT. AS BUILT DRAWINGS SHALL BE CREATED BY THE CONTRACTOR AND SUBMITTED TO THE CITY OF MASSILLON ENGINEER IN A CLEAR AND LEGENDABLE MANNER PRIOR TO FINAL INVOICE.

COST OF THIS WORK SHALL BE INCLUDED IN ITEM 623 CONSTRUCTION STAKING

RELATION TO WATER MAINS

SEWERS SHALL BE LAID AT LEAST 10 FEET HORIZONTALLY FROM ANY EXISTING OR PROPOSED WATER MAIN. THE DISTANCE SHALL BE MEASURED EDGE TO EDGE.

SEWERS CROSSING WATER MAINS SHALL BE LAID TO PROVIDE A MINIMUM VERTICAL DISTANCE OF 18 INCHES BETWEEN THE OUTSIDE OF THE WATER MAIN AND THE OUTSIDE OF THE SEWER.

NW NE SW SE N

VERTICAL IN FEET 1 .5 0

HORIZONTAL SCALE IN FEET 1 .5 0

CHECKED BY: KAD
DATE: June, 2018
DRAWN BY: BMH
DATE: June, 2018

REVISIONS:

DESCRIPTION	DATE

Westbrook Estates Phase 5
General Notes
City of Massillon
Stark County, Ohio

CIVPRO ENGINEERING
ENGINEERS-SURVEYORS-CONSTRUCTION MANAGERS
4450 BELDEN VILLAGE STREET NW, SUITE 800 CANTON, OH 44718
PHONE: (330) 266-2734 FAX: (330) 493-0539 INFO@CIVPROENGINEERING.COM
WWW.CIVPROENGINEERING.COM

DRAWING NAME: WB5-GN3
REF NUMBER:

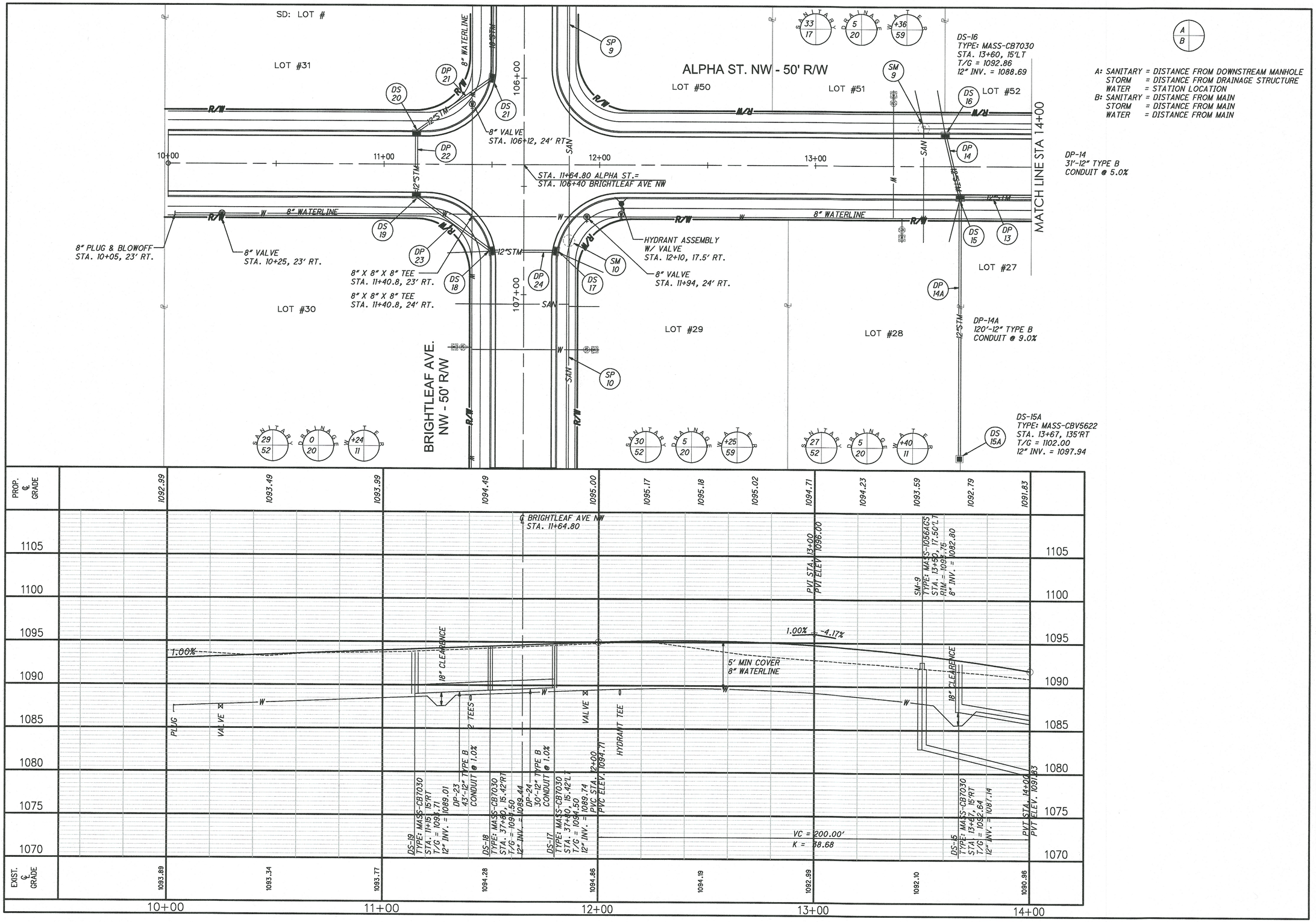

VERTICAL IN FEET

HORIZONTAL SCALE IN FEET

CHECKED BY: KAD

DATE: July, 2018

DRAWN BY: BMH

DATE: July, 2018

REVISIONS: DATE | DESCRIPTION

Westbrook Estates Phase 5

Alpha Ave. NW Sta. 10+00 to Sta. 14+00 Plan and Profile

City of Massillon
Stark County, Ohio

CIVPRO ENGINEERING
ENGINEERS-SURVEYORS-CONSTRUCTION MANAGERS
4450 BELDEN VILLAGE STREET NW, SUITE 800 CANTON, OH 44718
PHONE: (330) 268-3734 EMAIL: KAD@CIVPROENGINEERING.COM
WWW.CIVPROENGINEERING.COM

DRAWING NAME: AlphaPP1.Dwg

REF NUMBER:

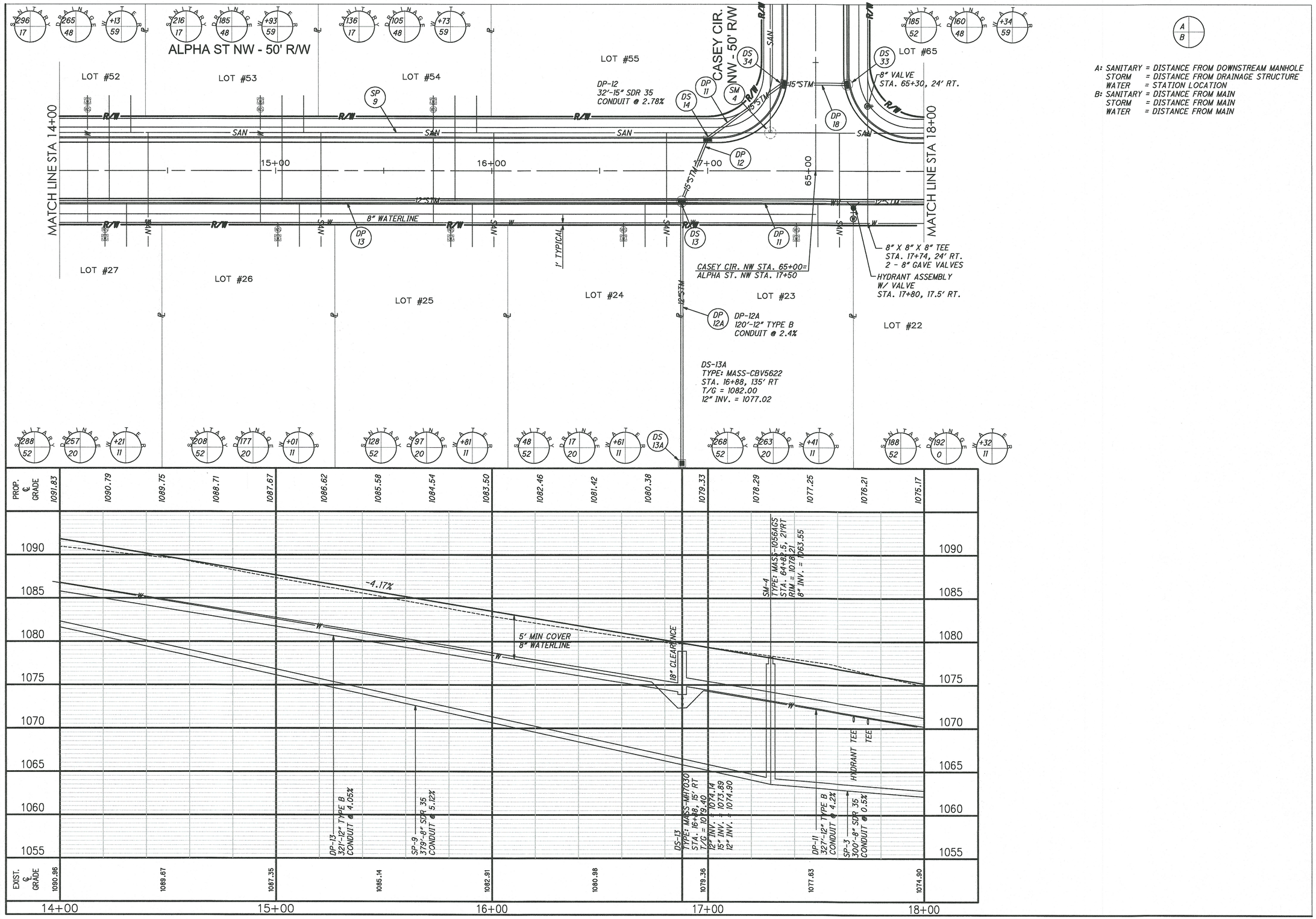

A: SANITARY = DISTANCE FROM DOWNSTREAM MANHOLE
STORM = DISTANCE FROM DRAINAGE STRUCTURE
WATER = STATION LOCATION
B: SANITARY = DISTANCE FROM MAIN
STORM = DISTANCE FROM MAIN
WATER = DISTANCE FROM MAIN

VERTICAL IN FEET

HORIZONTAL SCALE IN FEET

CHECKED BY: KAD
DATE: July, 2018
DRAWN BY: BMH
DATE: July, 2018

REVISIONS:

DATE	DESCRIPTION

Westbrook Estates Phase 5

Alpha St. NW Sta. 14+00 to Sta. 18+00 Plan and Profile
City of Massillon
Stark County, Ohio

CIVPRO ENGINEERING
ENGINEERS-SURVEYORS-CONSTRUCTION MANAGERS
4450 BELDEN VILLAGE STREET NW, SUITE 800 CANTON, OH 44718
PHONE: (330) 268-3734 EMAIL: KAD@CIVPROENGINEERING.COM
WWW.CIVPROENGINEERING.COM

DRAWING NAME: AlphaPP2.Dwg
REF NUMBER:

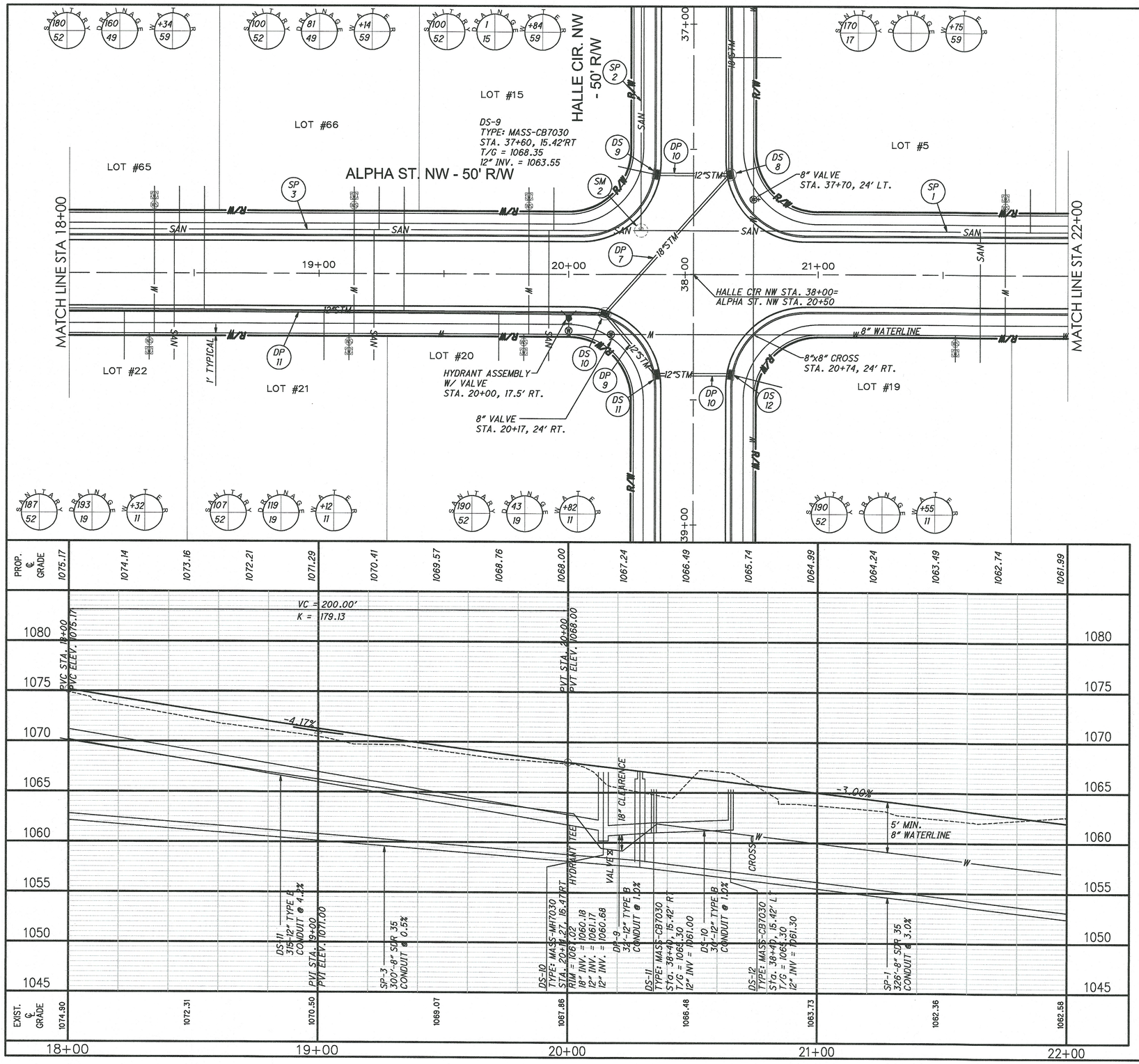

A: SANITARY = DISTANCE FROM DOWNSTREAM MANHOLE
STORM = DISTANCE FROM DRAINAGE STRUCTURE
WATER = STATION LOCATION
B: SANITARY = DISTANCE FROM MAIN
STORM = DISTANCE FROM MAIN
WATER = DISTANCE FROM MAIN

VERTICAL IN FEET

HORIZONTAL SCALE IN FEET

CHECKED BY: KAD
DATE: July, 2018
DRAWN BY: BMH
DATE: July, 2018

REVISIONS:

DATE	DESCRIPTION

Westbrook Estates Phase 5

Alpha St. NW Sta. 18+00 to Sta. 22+00 Plan and Profile

City of Massillon
Stark County, Ohio

CIVPRO ENGINEERING
ENGINEERS–SURVEYORS–CONSTRUCTION MANAGERS
4450 BELDEN VILLAGE STREET NW, SUITE 800 CANTON, OH 44718
PHONE: (330) 268-3734 EMAIL: KAD@CIVPROENGINEERING.COM
WWW.CIVPROENGINEERING.COM

DRAWING NAME: WB5PP3.Dwg

REF NUMBER:

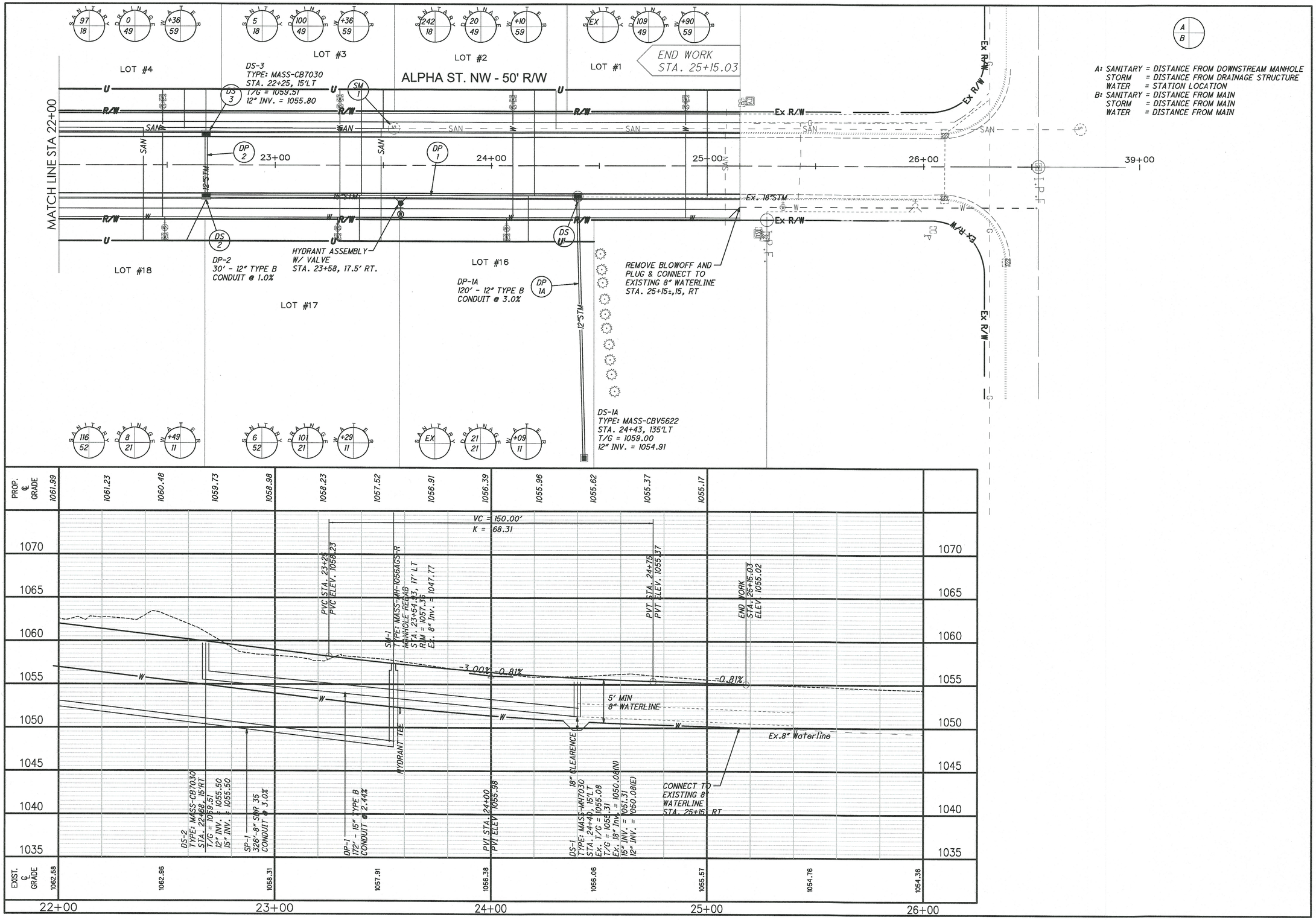

Westbrook Estates Phase 5

Alpha St. NW Sta. 22+00 to Sta. 25+15.03 Plan and Profile

City of Massillon
Stark County, Ohio

HORIZONTAL SCALE IN FEET

CHECKED BY: KAD
DATE: July, 2018
DRAWN BY: BMH
DATE: July, 2018

REVISIONS:

DATE	DESCRIPTION

CIVPRO ENGINEERING
ENGINEERS • SURVEYORS • CONSTRUCTION MANAGERS
4450 BELDEN VILLAGE STREET NW, SUITE 207, CANTON, OHIO 44718
PHONE: (330) 268-3724 EMAIL: KADKOVPROENGINEERING.COM
WWW.CIVPROENGINEERING.COM

DRAWING NAME: WBSPP5-4.0.dwg
REF NUMBER:

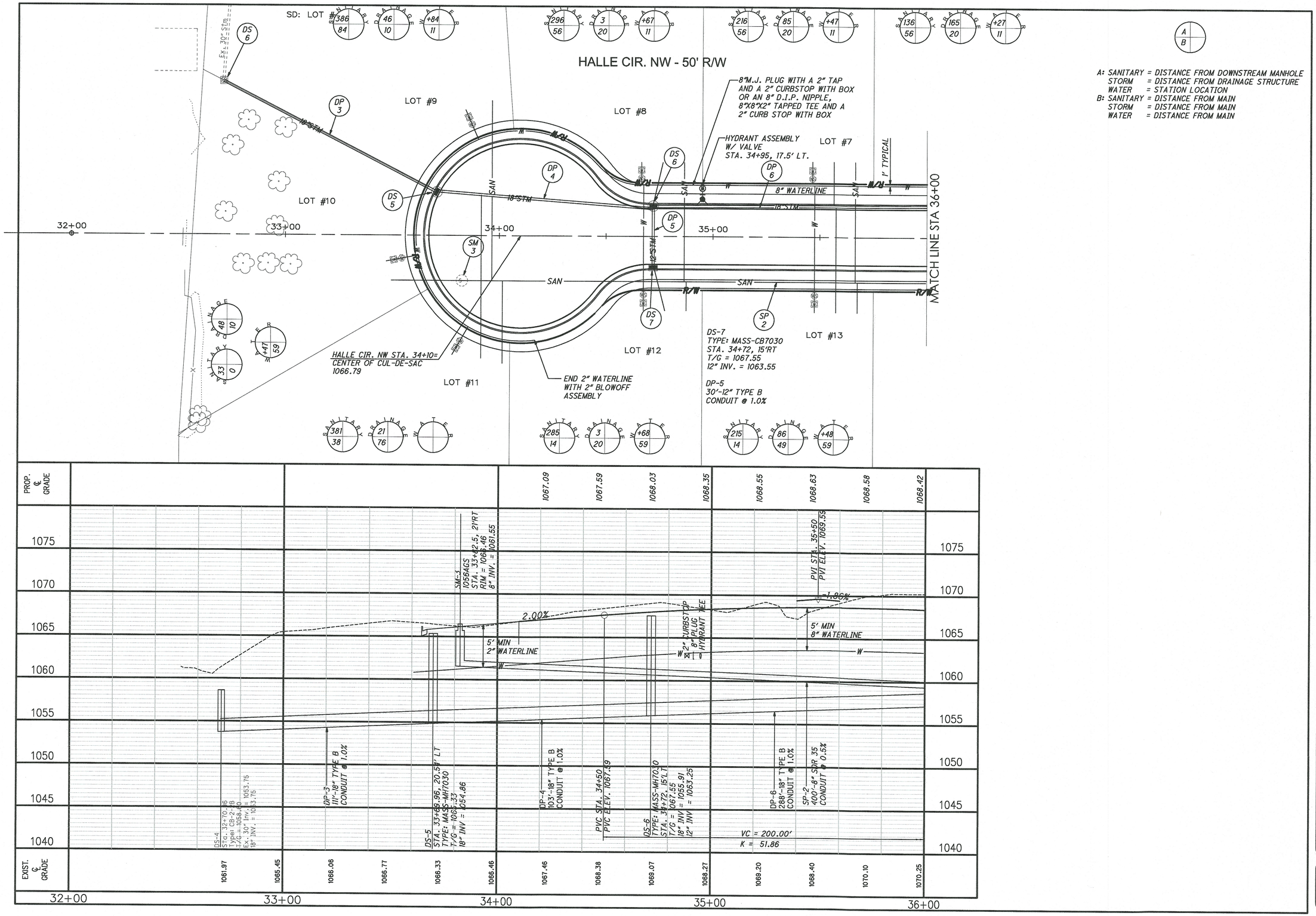

CIVPRO ENGINEERING
ENGINEERS-SURVEYORS-CONSTRUCTION MANAGERS
4450 BELDEN VILLAGE STREET NW, SUITE 800 CANTON, OH 44718
PHONE: (330) 208-1734 EMAIL: KADAVIS@CIVPROENGINEERING.COM
WWW.CIVPROENGINEERING.COM

Westbrook Estates Phase 5

Halle Cir. NW Sta. 32+00 to Sta. 36+00 Plan and Profile

City of Massillon
Stark County, Ohio

REVISIONS:

DATE	DESCRIPTION

VERTICAL IN FEET: 0, 2.5, 5
HORIZONTAL SCALE IN FEET: 0, 10, 20

CHECKED BY: KAD
DATE: July, 2018
DRAWN BY: BMH
DATE: July, 2018

DRAWING NAME: HallePP1.Dwg
REF NUMBER:

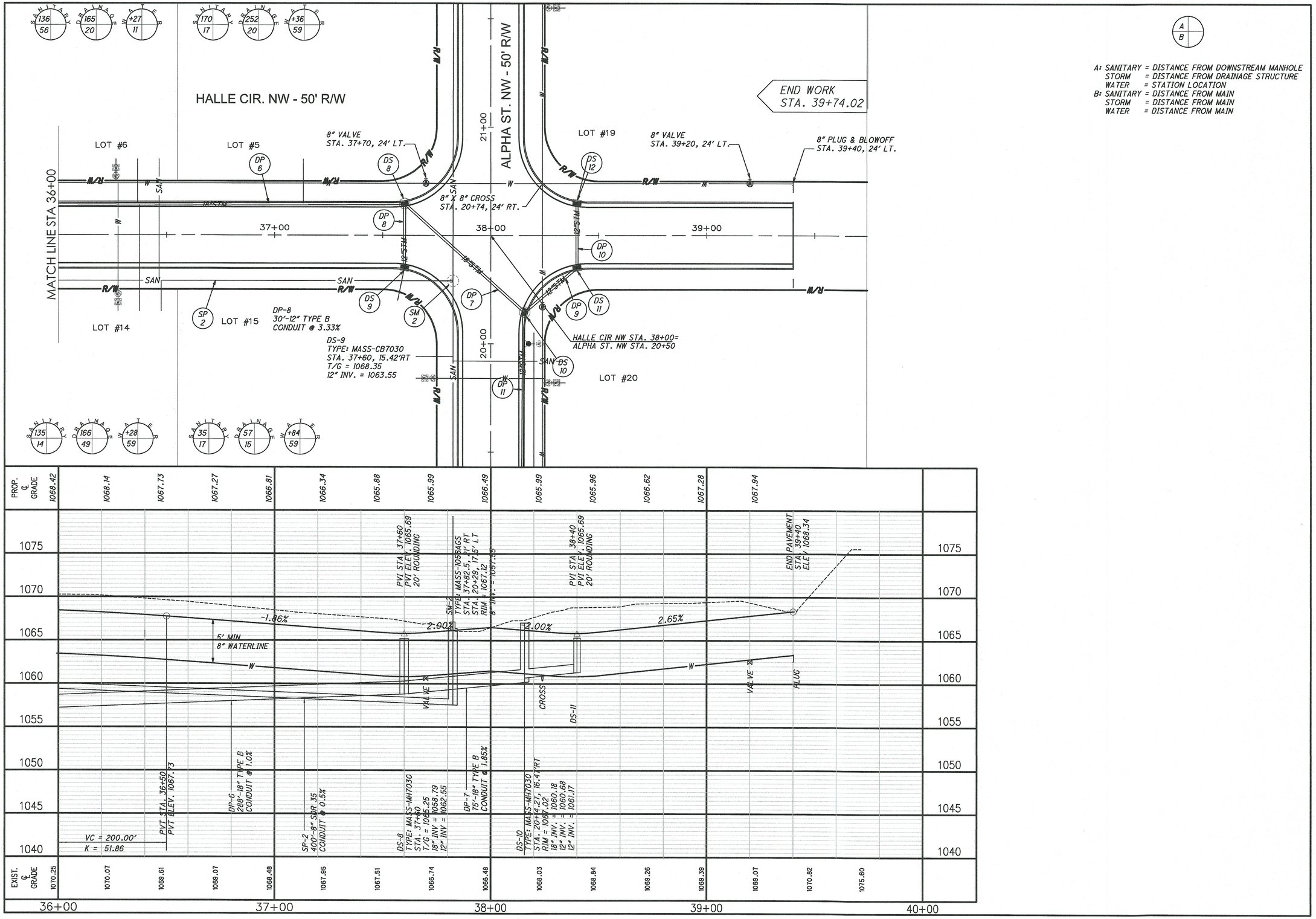

NW NE SW SE N

VERTICAL IN FEET: 0 2.5 5

0 10 20
HORIZONTAL SCALE IN FEET

CHECKED BY: KAD
DATE: July, 2018
DRAWN BY: BMH
DATE: July, 2018

REVISIONS:

DATE	DESCRIPTION

Westbrook Estates Phase 5

Halle Cir. NW Sta. 36+00 to Sta. 40+00 Plan and Profile

City of Massillon
Stark County, Ohio

CIVPRO ENGINEERING
ENGINEERS-SURVEYORS-CONSTRUCTION MANAGERS
4450 BELDEN VILLAGE STREET NW, SUITE 800 CANTON, OH 44718
PHONE: (330) 268-3734 EMAIL: KADAVIS@CIVILPROENGINEERING.COM
WWW.CIVILPROENGINEERING.COM

DRAWING NAME: HallePP2.dwg
REF NUMBER:

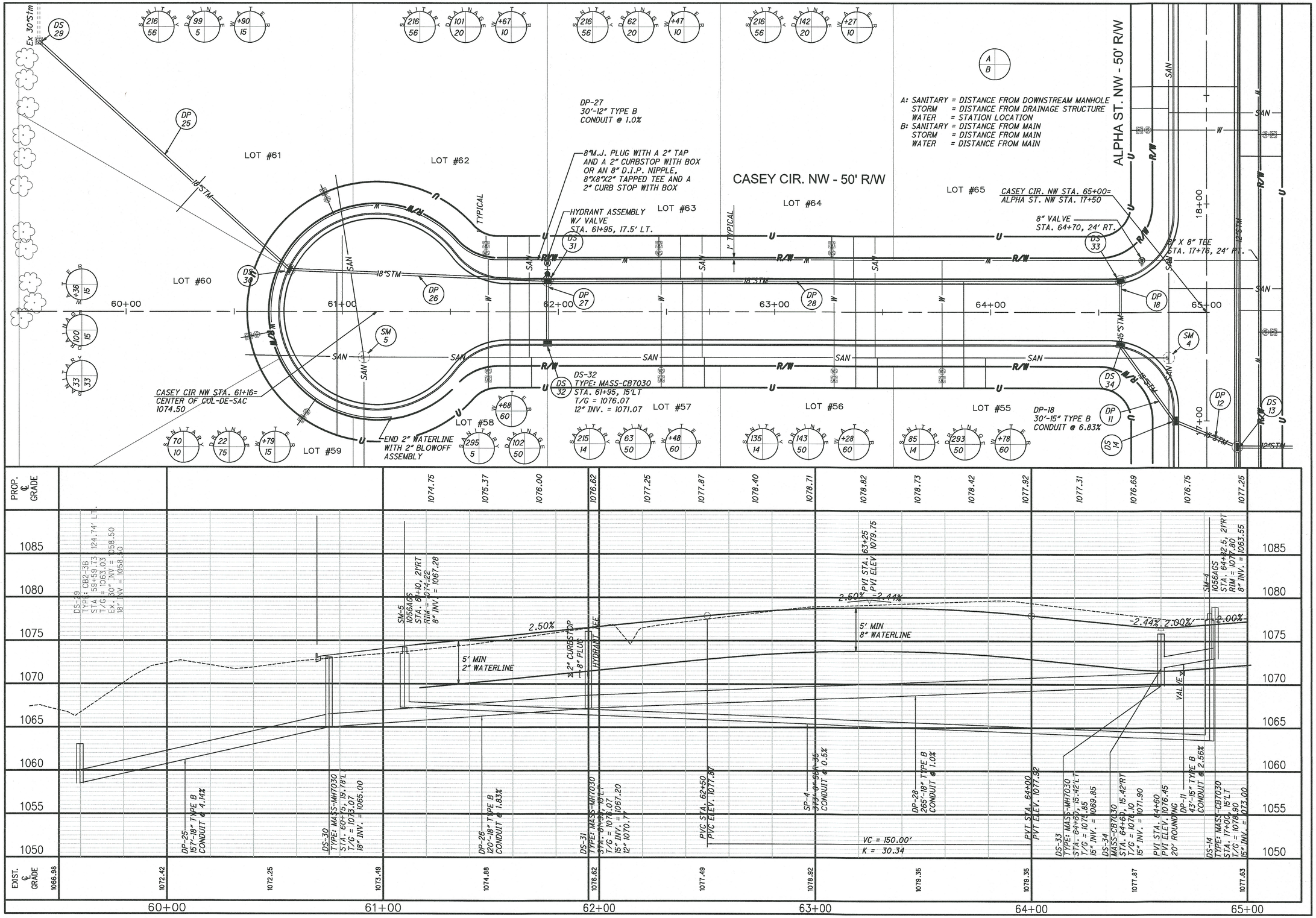

NW NE SW SE N

VERTICAL FEET 5 2.5 0

0 10 20 HORIZONTAL SCALE IN FEET

CHECKED BY: KAD

DATE: July, 2018

DRAWN BY: BMH

DATE: July, 2018

REVISIONS:

DATE	DESCRIPTION

Westbrook Estates Phase 5

Casey Cir. NW Sta. 60+00 to Sta. 65+00 Plan and Profile

City of Massillon
Stark County, Ohio

CIVPRO ENGINEERING
ENGINEERS · SURVEYORS · CONSTRUCTION MANAGERS
4450 BELDEN VILLAGE STREET NW, SUITE 800 CANTON, OH 44718
PHONE: (330) 268-3724 EMAIL: KADKO@CIVPROENGINEERING.COM
WWW.CIVPROENGINEERING.COM

DRAWING NAME: CaseyPP1.Dwg

REF NUMBER:

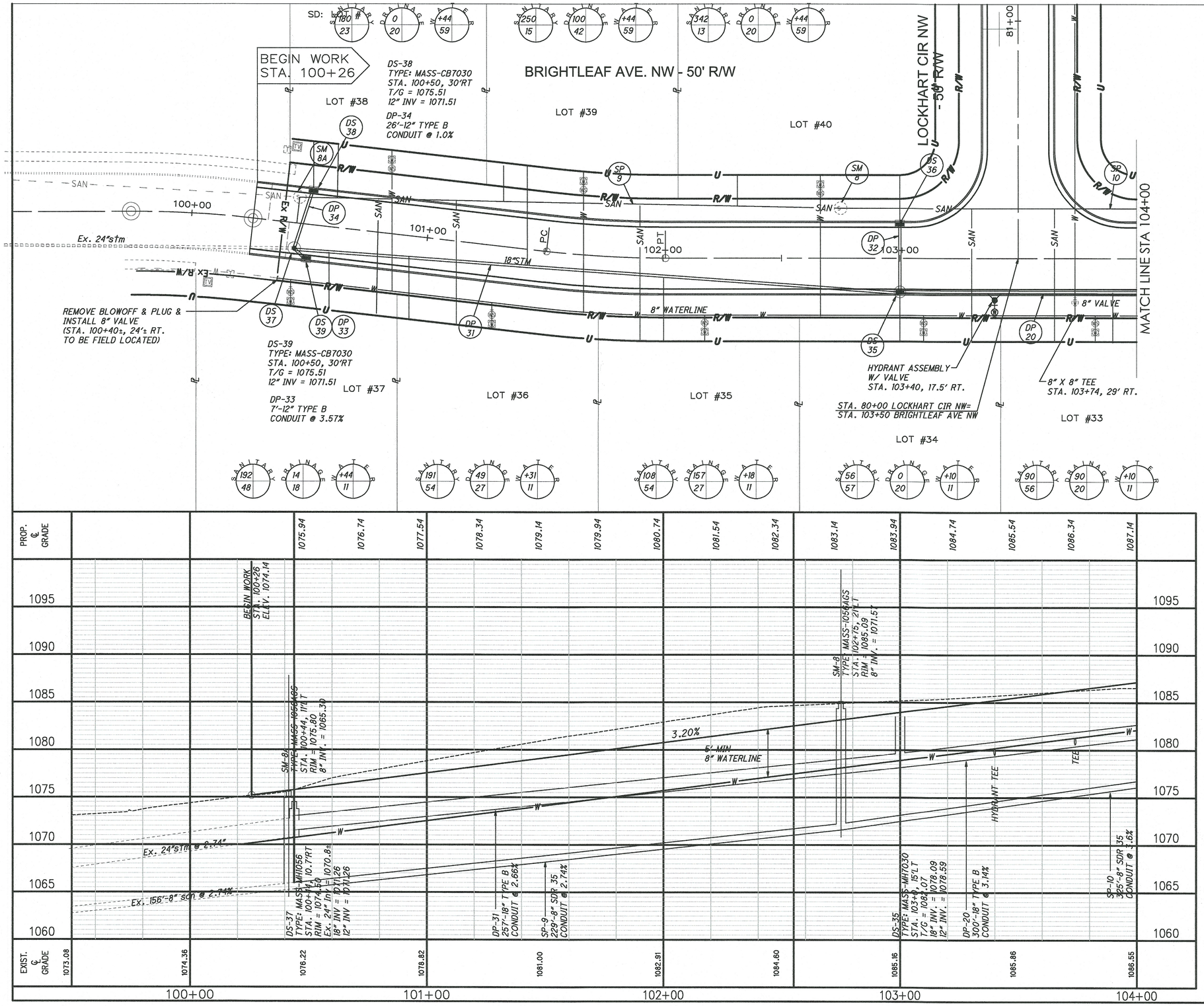

A: SANITARY = DISTANCE FROM DOWNSTREAM MANHOLE
STORM = DISTANCE FROM DRAINAGE STRUCTURE
WATER = STATION LOCATION
B: SANITARY = DISTANCE FROM MAIN
STORM = DISTANCE FROM MAIN
WATER = DISTANCE FROM MAIN

HORIZONTAL SCALE IN FEET

CHECKED BY: KAD
DATE: July, 2018
DRAWN BY: BMH
DATE: July, 2018

REVISIONS: DATE | DESCRIPTION

Westbrook Estates Phase 5

Brightleaf Ave. NW Sta. 100+00 to Sta. 104+00 Plan and Profile
City of Massillon
Stark County, Ohio

CIVPRO ENGINEERING
ENGINEERS-SURVEYORS-CONSTRUCTION MANAGERS
4450 BELDEN VILLAGE STREET NW, SUITE 800 CANTON, OH 44718
PHONE: (330) 268-3734 EMAIL: KAD@CIVPROENGINEERING.COM
WWW.CIVPROENGINEERING.COM

DRAWING NAME: BrightleafPP1.Dwg
REF NUMBER:

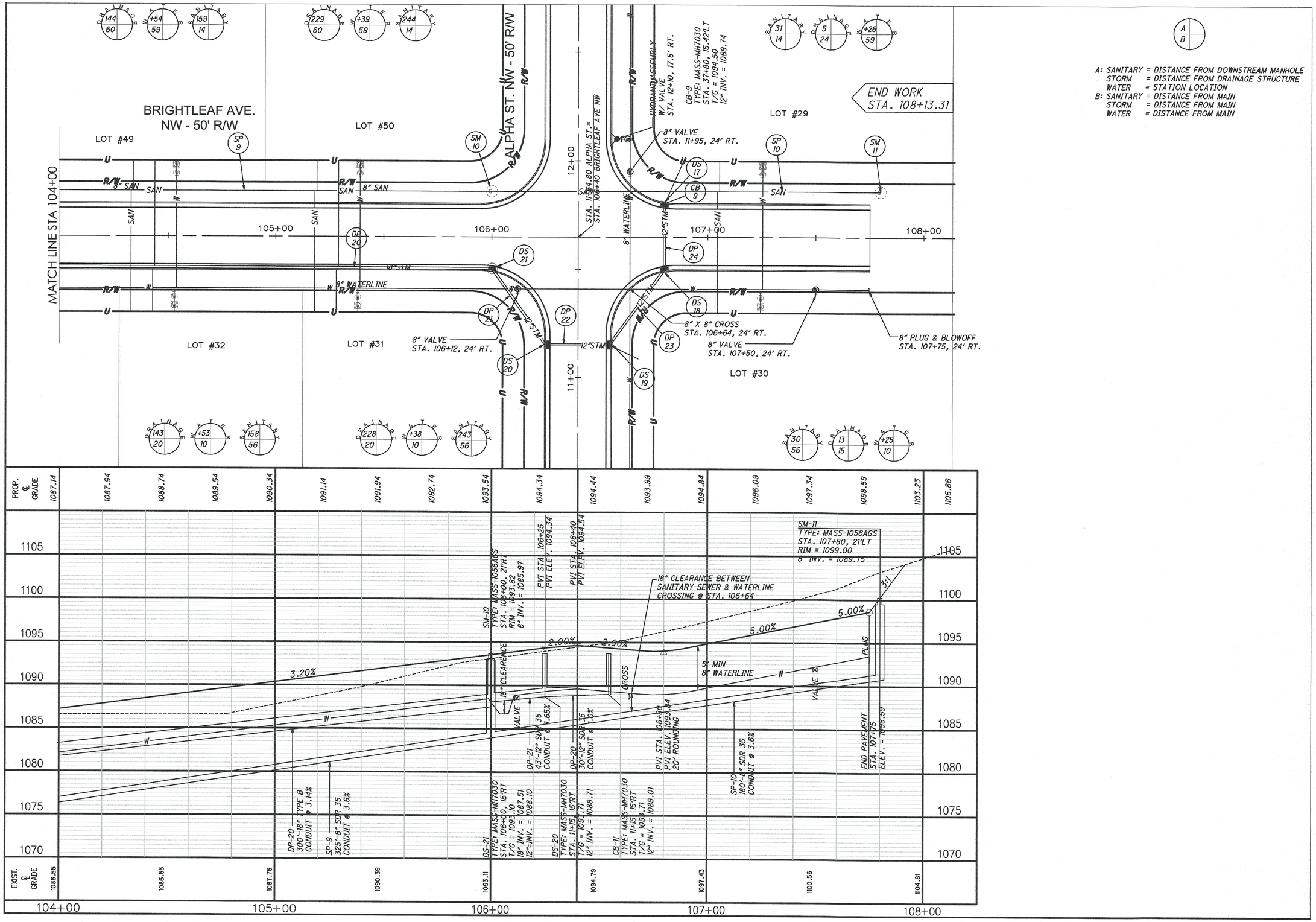

NW NE SW SE

VERTICAL SCALE IN FEET: 0, 2.5, 5

0 10 20

HORIZONTAL SCALE IN FEET

CHECKED BY: KAD

DATE: July, 2018

DRAWN BY: BMH

DATE: July, 2018

REVISIONS:

DATE	DESCRIPTION

Westbrook Estates Phase 5

Brightleaf Ave. NW Sta. 104+00 to Sta. 108+00 Plan and Profile

City of Massillon
Stark County, Ohio

CIVPRO ENGINEERING
ENGINEERS-SURVEYORS-CONSTRUCTION MANAGERS
4450 BELDEN VILLAGE STREET NW, SUITE 800 CANTON, OH 44718
PHONE: (330) 268-1724 EMAIL: KADAMYAN@CIVPROENGINEERING.COM
WWW.CIVPROENGINEERING.COM

DRAWING NAME: Brightleaf1PP2.Dwg

REF NUMBER:

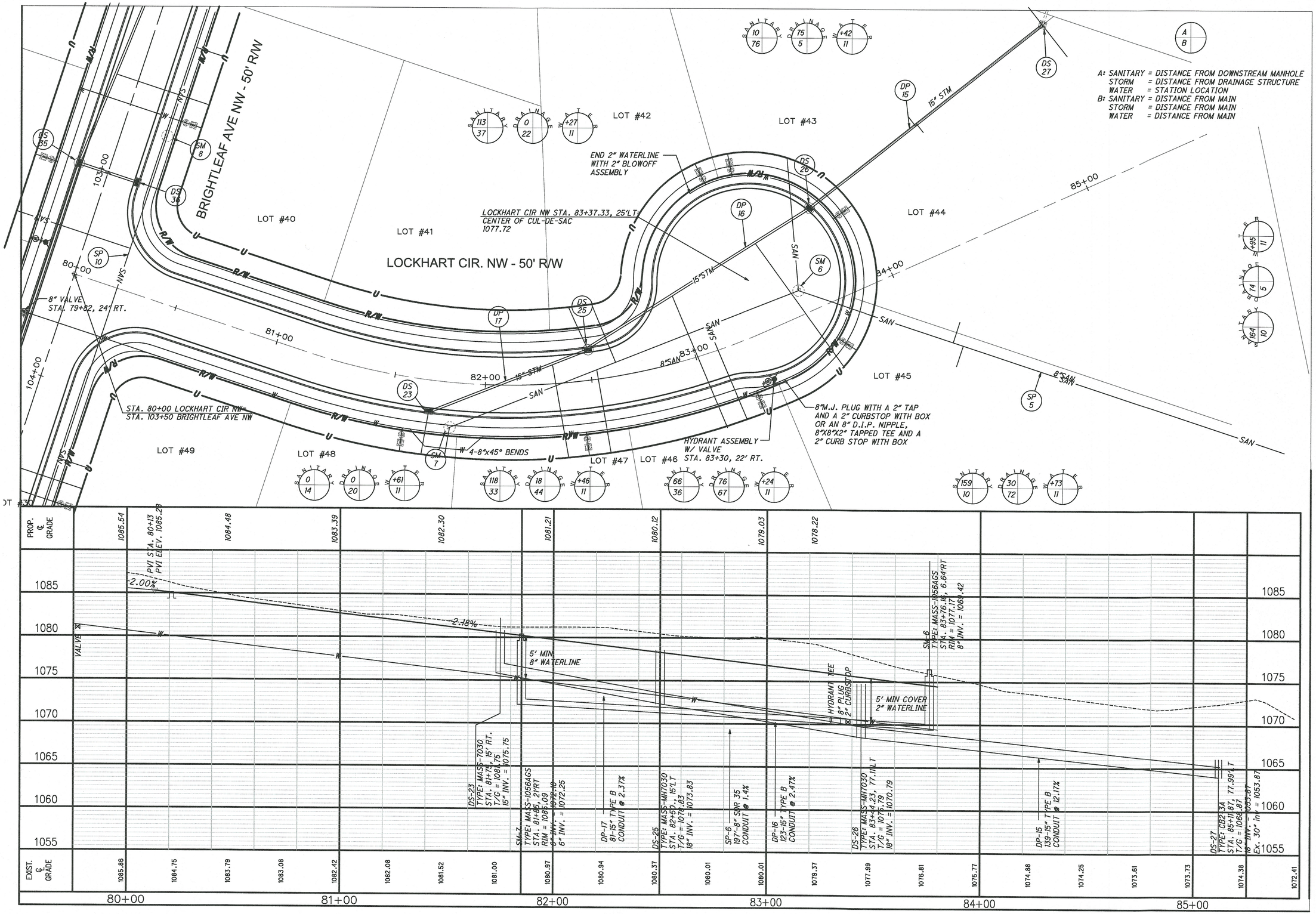

VERTICAL IN FEET

HORIZONTAL SCALE IN FEET

CHECKED BY: KAD

DATE: July, 2018

DRAWN BY: BMH

DATE: July, 2018

REVISIONS: DATE | DESCRIPTION

Westbrook Estates Phase 5

Lockhart Cir. NW Sta. 80+00 to Sta. 84+00 Plan and Profile

City of Massillon
Stark County, Ohio

CIVPRO ENGINEERING
ENGINEERS-SURVEYORS-CONSTRUCTION MANAGERS
4450 BELDEN VILLAGE STREET NW, SUITE 800 CANTON, OH 44718
PHONE: (330) 268-3734 EMAIL: KADICIVPROENGINEERING.COM
WWW.CIVPROENGINEERING.COM

DRAWING NAME: LockhartPP1.Dwg

REF NUMBER:

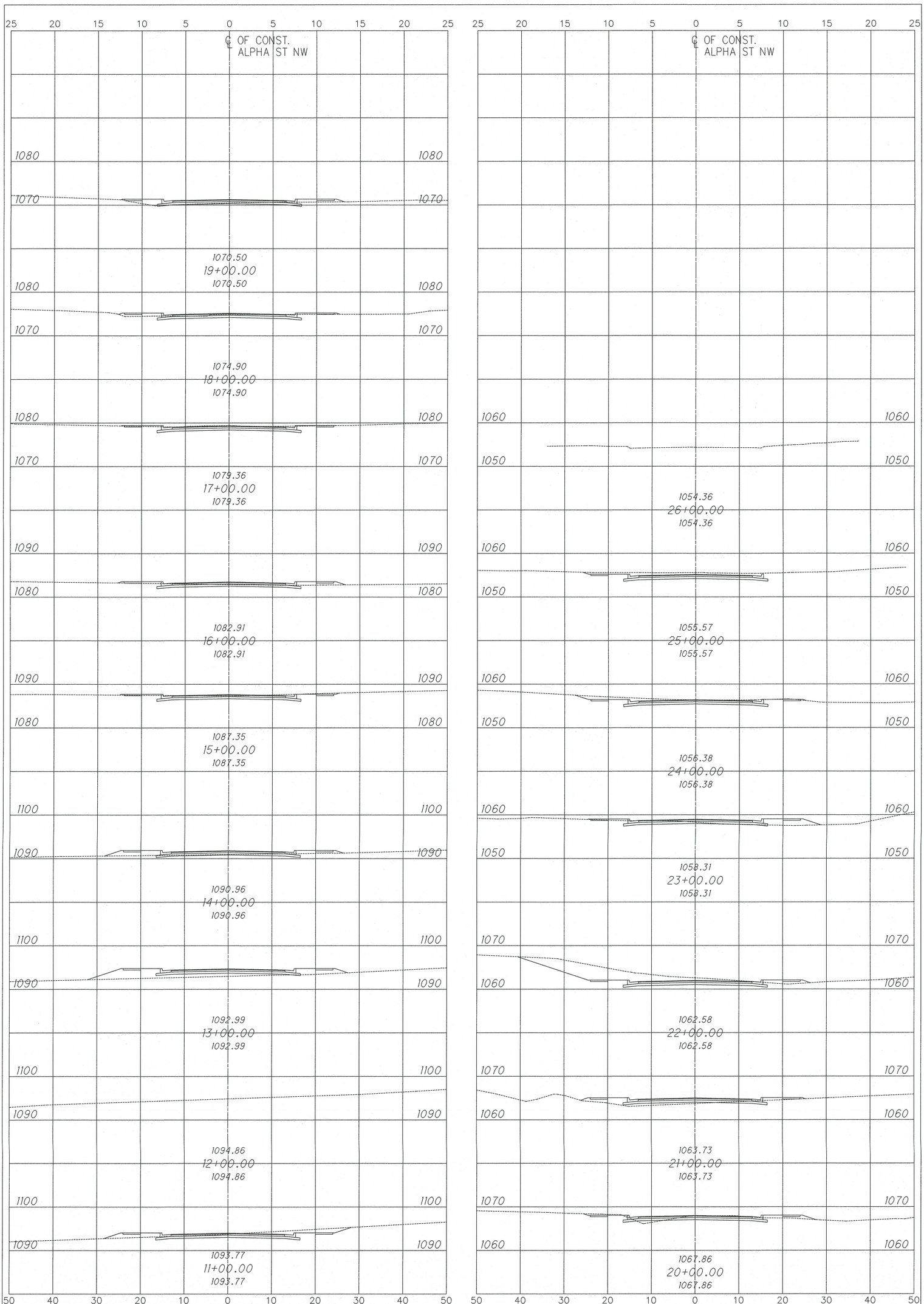

19 / 40

REF. NUMBER:

DRAWING NAME: Xsect-1805

CIVPRO ENGINEERING
ENGINEERS-SURVEYORS-CONSTRUCTION MANAGERS
4450 BELDEN VILLAGE STREET NW, SUITE 800 CANTON, OH 44718
PHONE: (330) 268-3734 EMAIL: KAD@CIVPROENGINEERING.COM
WWW.CIVPROENGINEERING.COM

Westbrook Estates Phase 5

Cross Sections

City of Massillon
Stark County, Ohio

REVISIONS:	
DATE	DESCRIPTION

DATE: July, 2018

DRAWN BY: BMH

DATE: July, 2018

CHECKED BY: KAD

HORIZONTAL SCALE IN FEET 1" = 5'

VERTICAL SCALE 1" = 5'

NW NE SW SE N

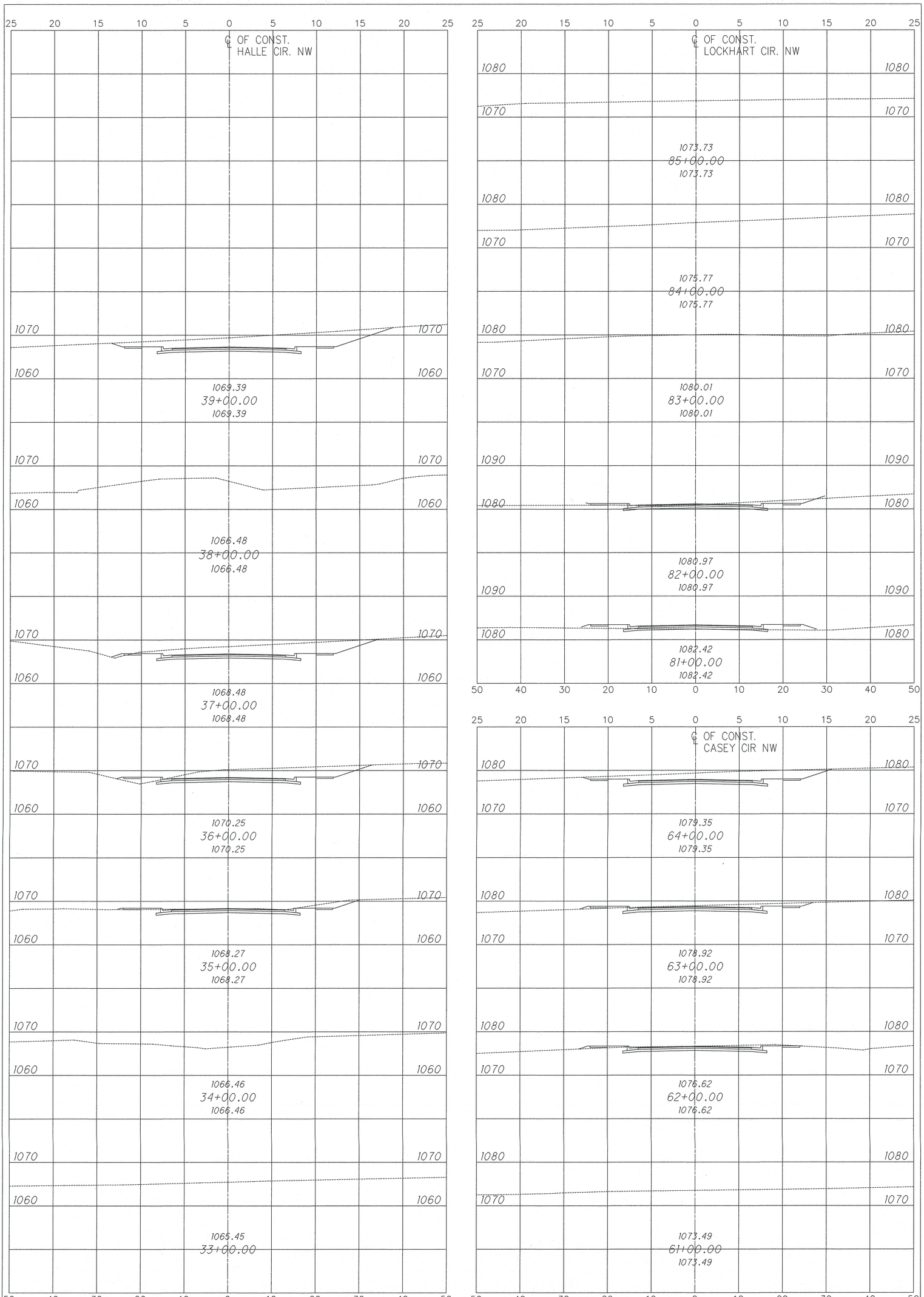

20 / 40

REF NUMBER:

DRAWING NAME: Xsct-H85

CIVPRO ENGINEERING

ENGINEERS–SURVEYORS–CONSTRUCTION MANAGERS
4450 BELDEN VILLAGE STREET NW, SUITE 800 CANTON, OH 44718
PHONE: (330) 268-3734 EMAIL: KAD@CIVPROENGINEERING.COM
WWW.CIVPROENGINEERING.COM

Westbrook Estates Phase 5
Cross Sections
City of Massillon
Stark County, Ohio

REVISIONS:

DATE	DESCRIPTION

DATE: July, 2018

DRAWN BY: BMH

DATE: July, 2018

CHECKED BY: KAD

HORIZONTAL SCALE IN FEET

VERTICAL IN FEET

NW NE SW SE

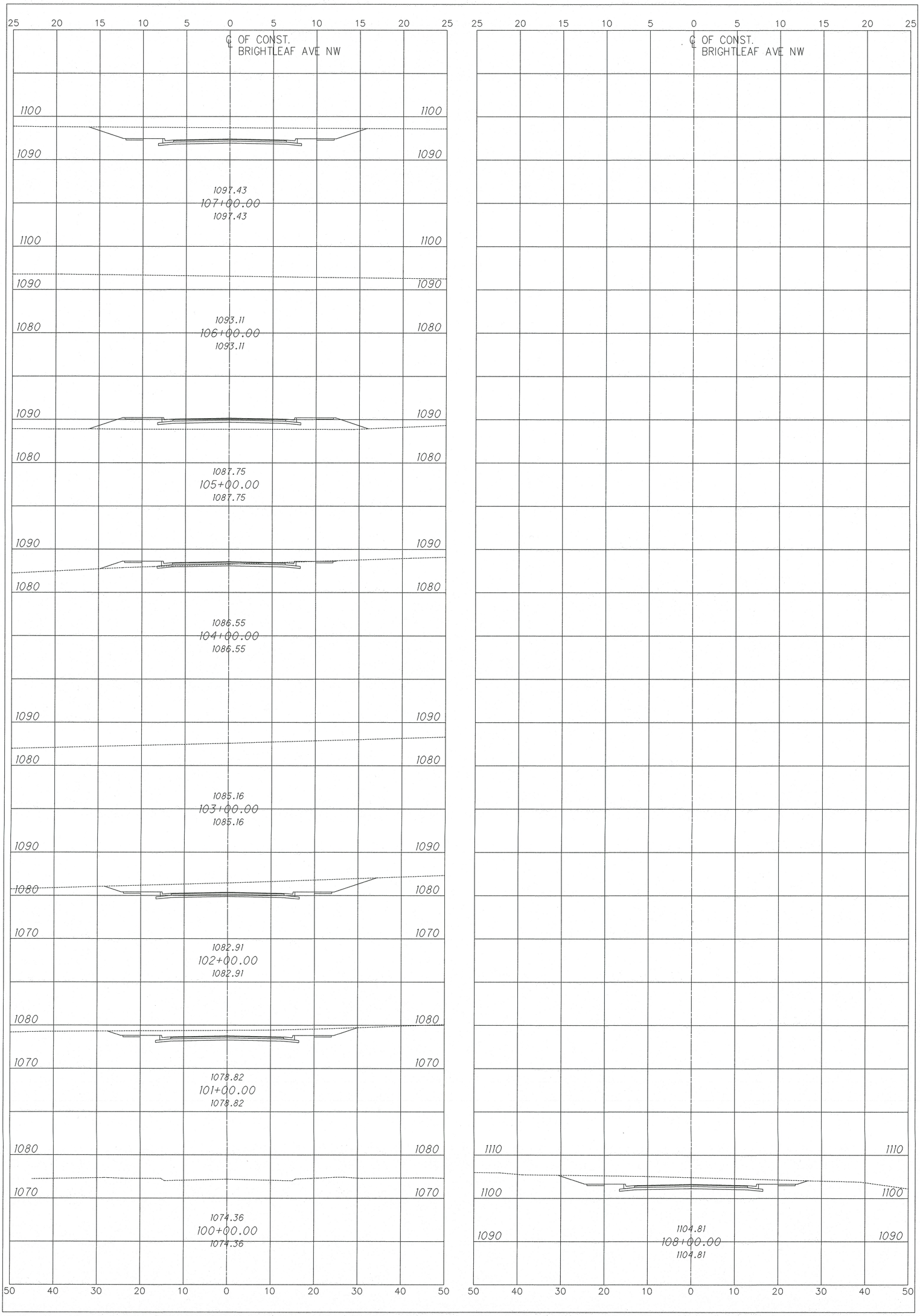

CIVPRO ENGINEERING
ENGINEERS–SURVEYORS–CONSTRUCTION MANAGERS
4450 BELDEN VILLAGE STREET NW, SUITE 800 CANTON, OH 44718
PHONE: (330) 268-3734 EMAIL: KAD@CIVPROENGINEERING.COM
WWW.CIVPROENGINEERING.COM

Westbrook Estates Phase 5

Cross Sections
City of Massillon
Stark County, Ohio

REVISIONS:	
DATE	DESCRIPTION

DATE: July, 2018
DRAWN BY: BMH
DATE: July, 2018
CHECKED BY: KAD
HORIZONTAL SCALE IN FEET
VERTICAL IN FEET

DRAWING NAME: SKI3-BuckryRdgeAdjustations
REF NUMBER:
21/40

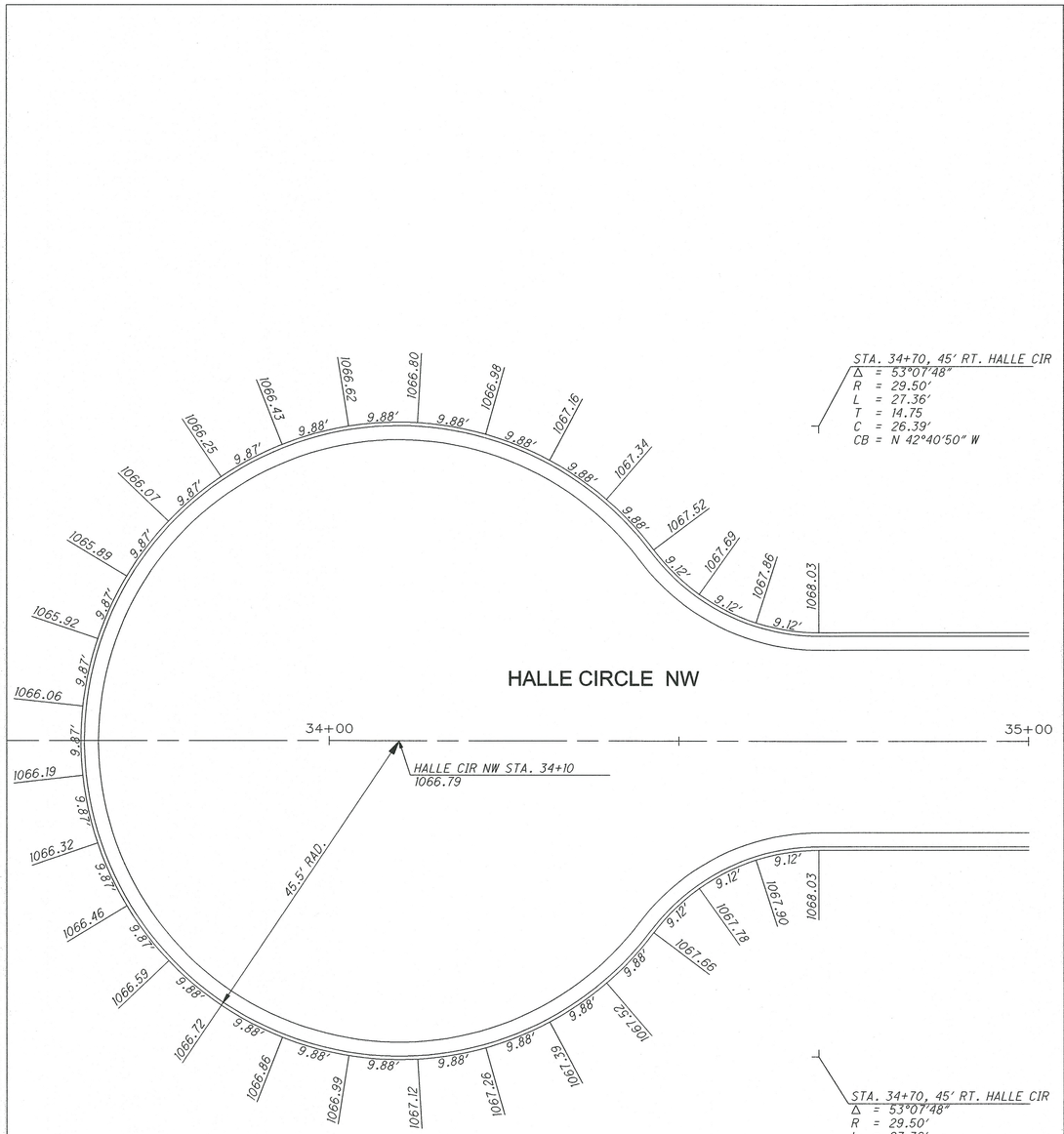

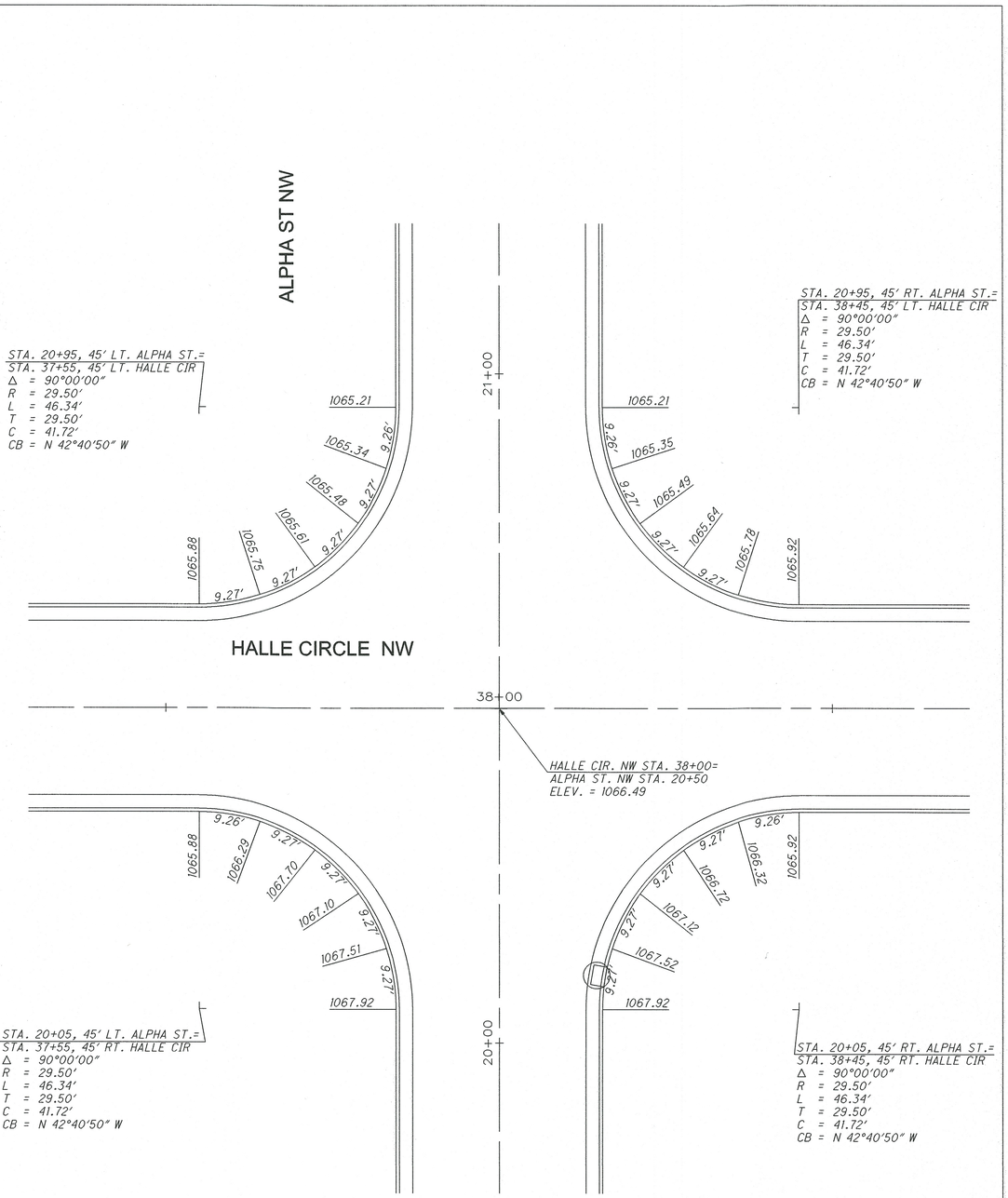

NOTE

1. ALL ELEVATION ARE OF THE TOP OF CURB
2. CURVE DATA IS OF THE BACK OF CURB

N
NW NE SW SE

VERTICAL IN FEET
10
5
0

0 5 10
HORIZONTAL SCALE IN FEET

CHECKED BY: KAD
DATE: July, 2018
DRAWN BY: BMH
DATE: July, 2018

DATE	DESCRIPTION

Westbrook Estate Phase 5

Intersection Detial
City of Massillon
Stark County, Ohio

CIVPRO ENGINEERING
ENGINEERS-SURVEYORS-CONSTRUCTION MANAGERS
4451 BELDEN VILLAGE STREET NW, SUITE 900 CANTON, OH 44718
PHONE: (330) 305-3741 FAX: (330) 305-3742 CIVPROENGR@GMAIL.COM
WWW.CIVPROENGINEERING.COM

DRAWING NAME: Int Det.Dwg
REF NUMBER:
22 / 40

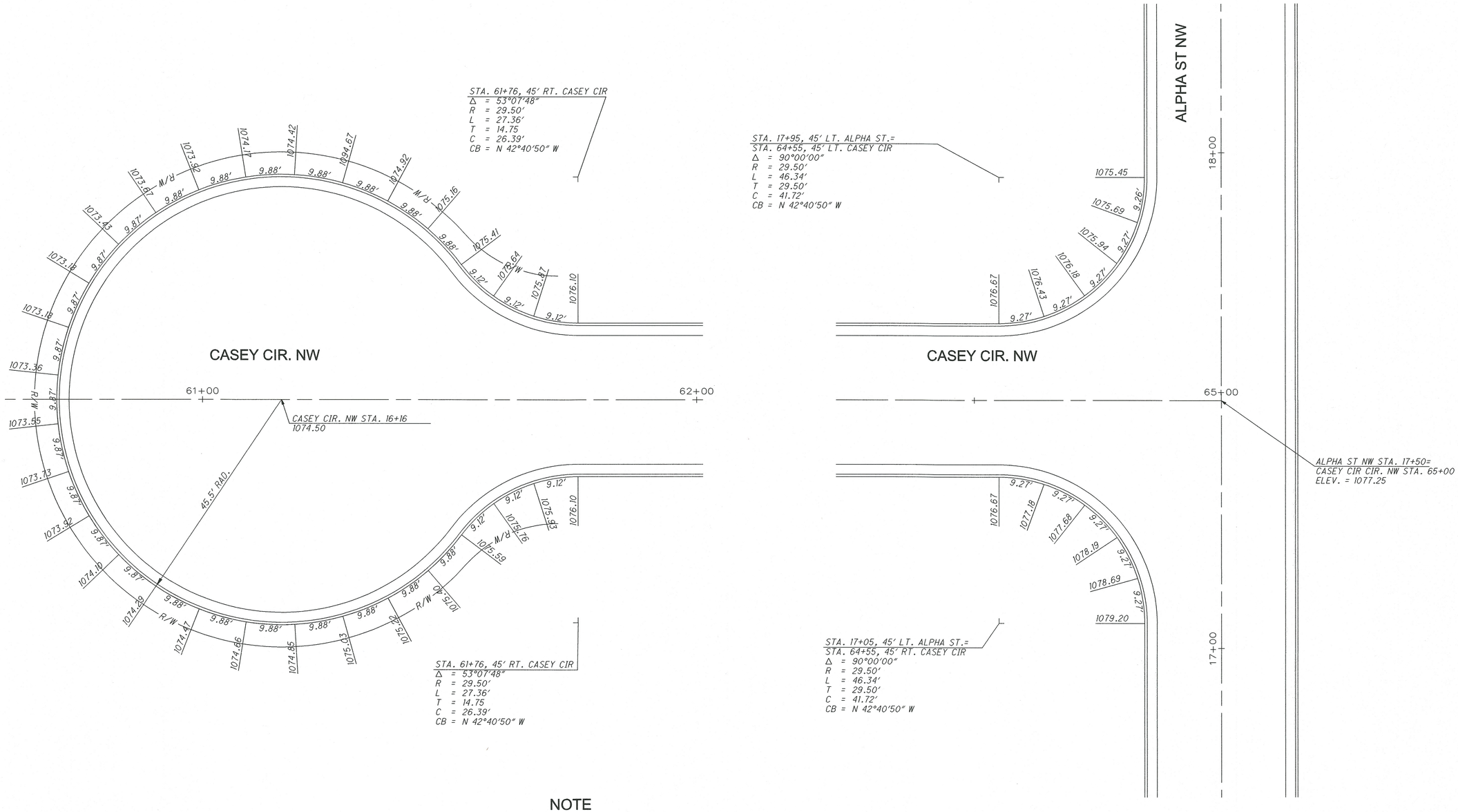

NOTE

1. ALL ELEVATION ARE OF THE TOP OF CURB
2. CURVE DATA IS OF THE BACK OF CURB

VERTICAL IN FEET

HORIZONTAL SCALE IN FEET

CHECKED BY: KAD

DATE: July, 2018

DRAWN BY: BMH

DATE: July, 2018

DATE	DESCRIPTION

Westbrook Estate Phase 5

Intersection Detial

City of Massillon

Stark County, Ohio

CIVPRO ENGINEERING

ENGINEERS-SURVEYORS-CONSTRUCTION MANAGERS

4450 BELDEN VILLAGE STREET NW, SUITE 800 CANTON, OH 44718

PHONE: (330) 268-3734 EMAIL: KAD@CIVPROENGINEERING.COM

WWW.CIVPROENGINEERING.COM

DRAWING NAME: Int Det.Dwg

REF NUMBER:

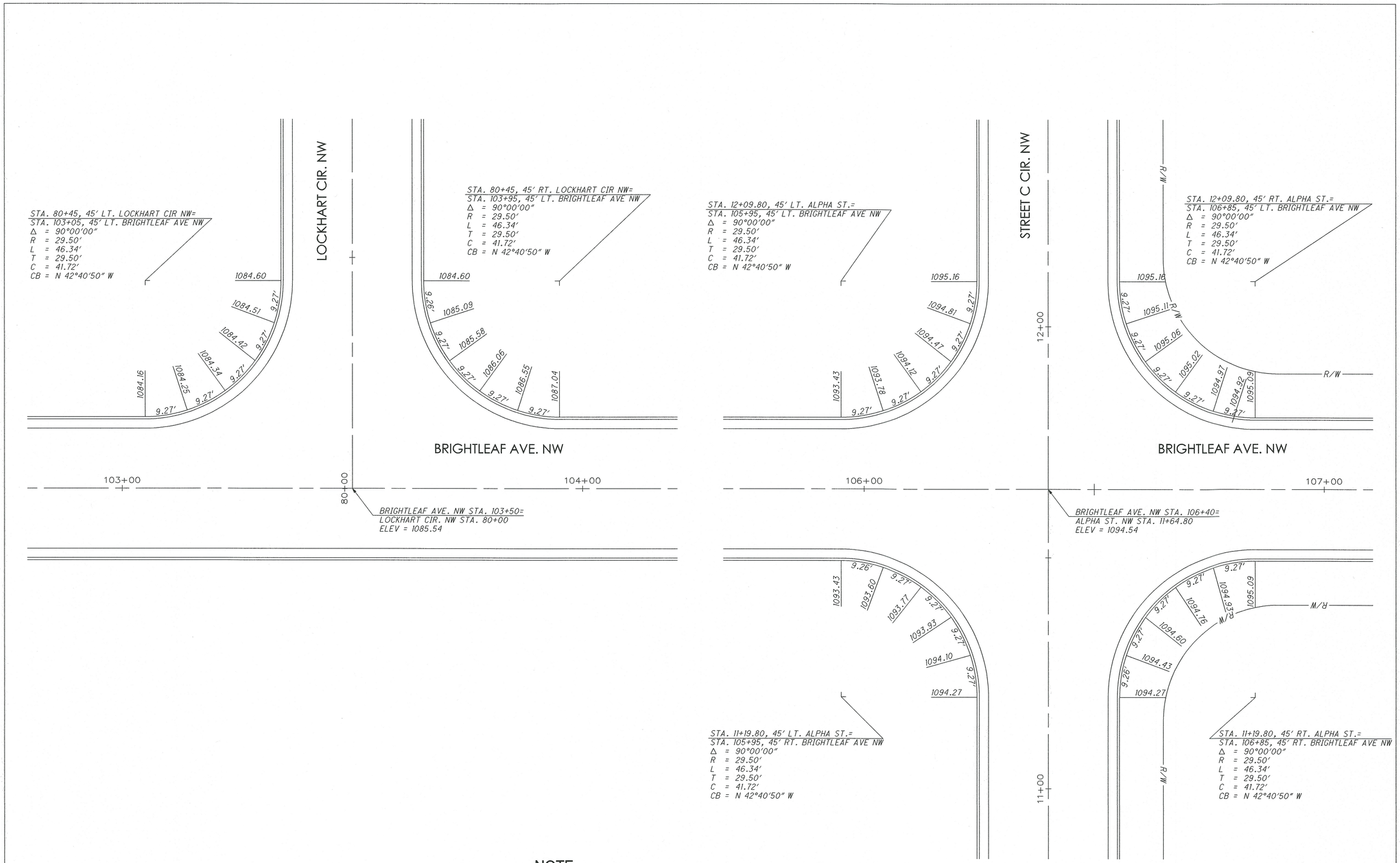

NOTE

1. ALL ELEVATION ARE OF THE TOP OF CURB
2. CURVE DATA IS OF THE BACK OF CURB

VERTICAL IN FEET

HORIZONTAL SCALE IN FEET

CHECKED BY: KAD

DATE: July, 2018

DRAWN BY: BMH

DATE: July, 2018

DATE	DESCRIPTION

Westbrook Estate Phase 5
Intersection Detial
City of Massillon
Stark County, Ohio

CIVPRO ENGINEERING
ENGINEERS-SURVEYORS-CONSTRUCTION MANAGERS
4450 BELDEN VILLAGE STREET NW, SUITE 800 CANTON, OH 44718
PHONE: (330) 268-3734 EMAIL: KAD@CIVPROENGINEERING.COM
WWW.CIVPROENGINEERING.COM

DRAWING NAME: Int Det.Dwg

REF NUMBER:

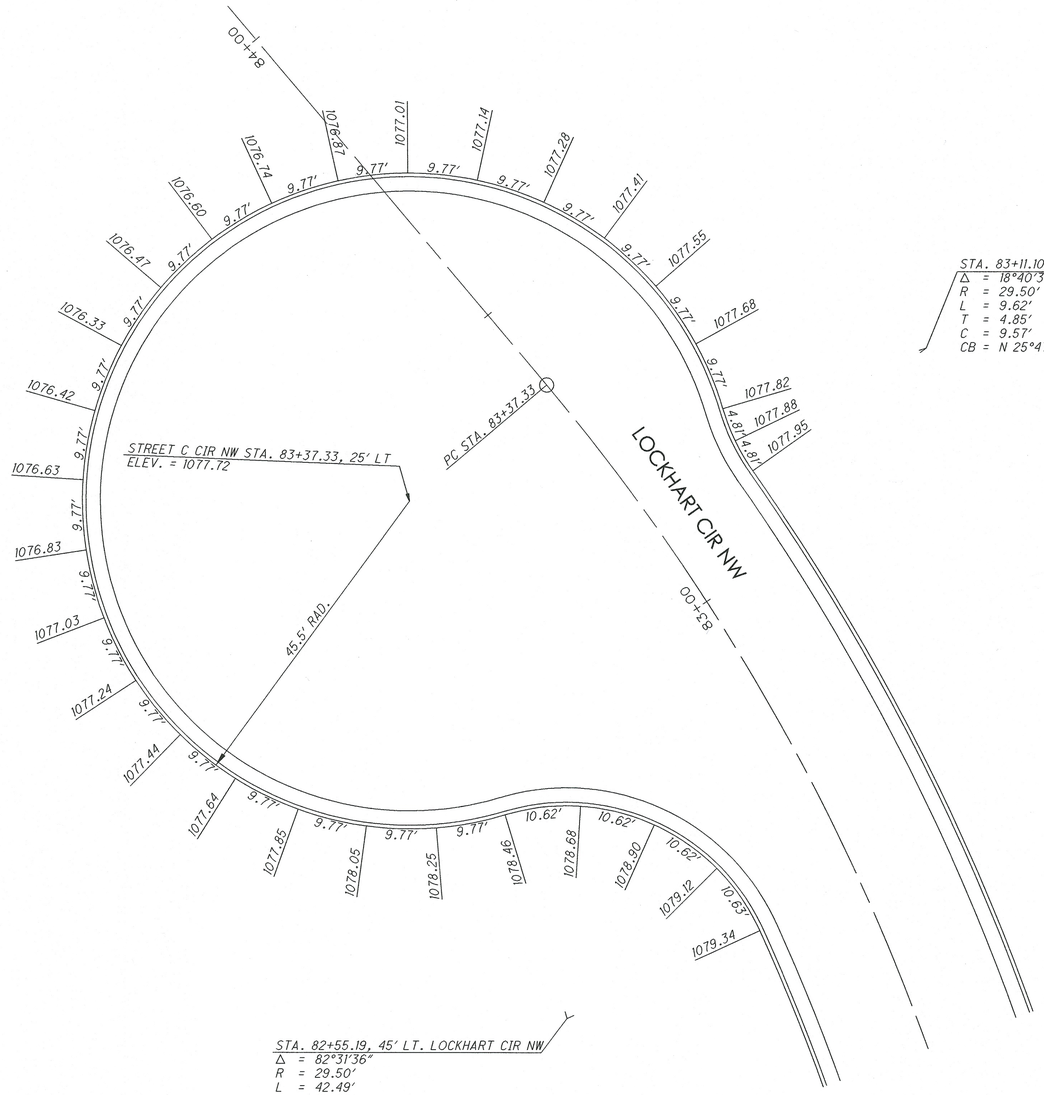

STA. 83+11.10, 45' RT. LOCKHART CIR NW
Δ = 18°40'35"
R = 29.50'
L = 9.62'
T = 4.85'
C = 9.57'
CB = N 25°47'42" W

STA. 82+55.19, 45' LT. LOCKHART CIR NW
Δ = 82°31'36"
R = 29.50'
L = 42.49'
T = 25.88'
C = 38.91'
CB = N 65°43'5" W

NOTE

1. ALL ELEVATION ARE OF THE TOP OF CURB
2. CURVE DATA IS OF THE BACK OF CURB

NW NE SW SE

VERTICAL IN FEET: 10, 5, 0

0 5 10

HORIZONTAL SCALE IN FEET

CHECKED BY: KAD

DATE: July, 2018

DRAWN BY: BMH

DATE: July, 2018

DATE	DESCRIPTION

Westbrook Estate Phase 5

Intersection Detial

City of Massillon
Stark County, Ohio

CIVPRO ENGINEERING
ENGINEERS-SURVEYORS-CONSTRUCTION MANAGERS
4450 BELDEN VILLAGE STREET NW, SUITE 800 CANTON, OH 44718
PHONE: (330) 268-1734 EMAIL: KADM@CIVPROENGINEERING.COM
WWW.CIVPROENGINEERING.COM

DRAWING NAME: Int Det.Dwg

REF NUMBER:

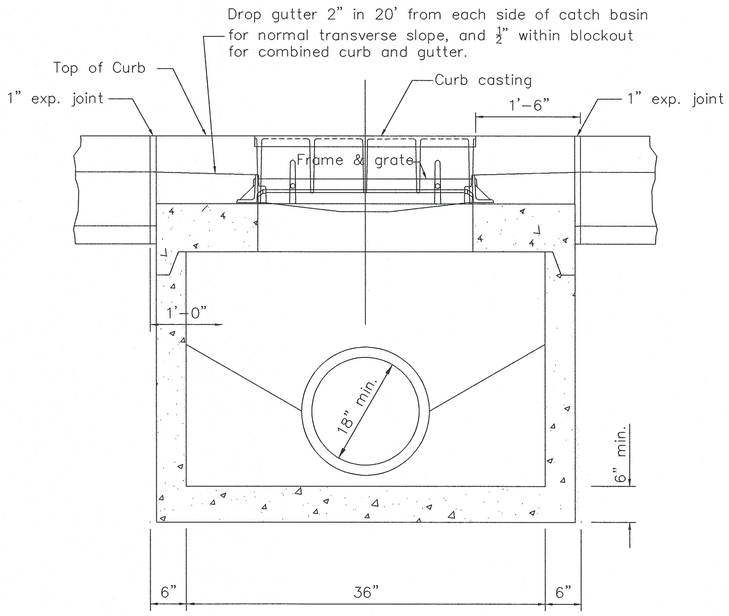

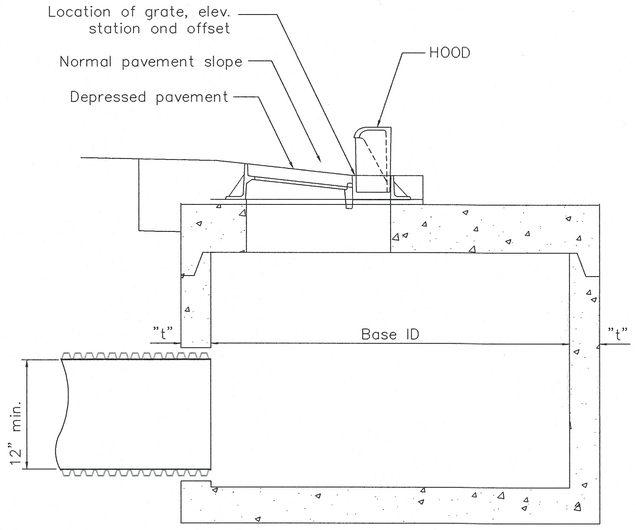

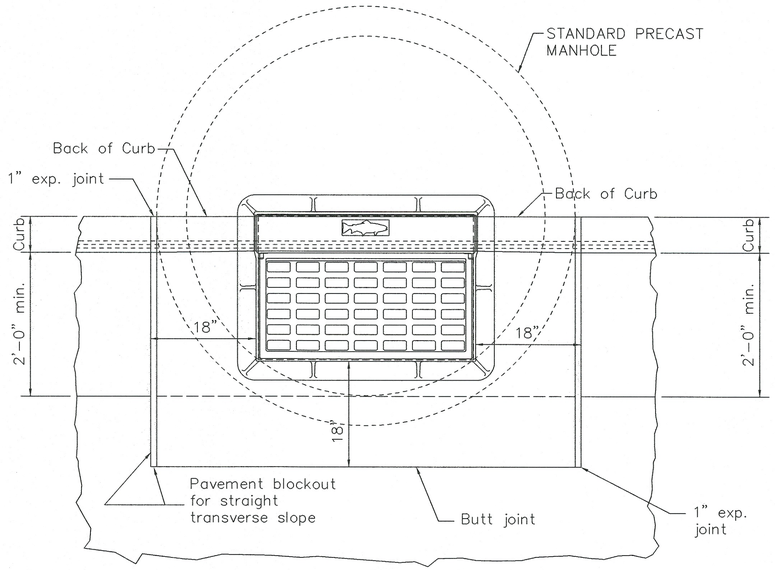

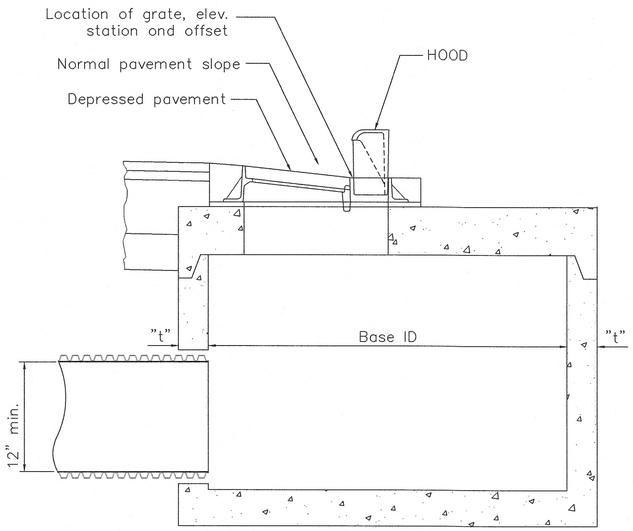

GRATES: Two required. For details, see EJ 7030Z. provide Grate M2 unless the plans specifically require the bicycle safety grate.

CASTINGS: Provide a design essentially the same and equally as strong as the the one shown. Below is a list of approved EJ

Frame = 7030 Z
Grate = 7030 M2
= 7030 M3 for bicycle safety
Hood = 7030 T1
7030 T3 for drop curb areas

BEARING AREAS: Fit and finish the frame and grate to provide a firm seat and even seat. No projections are permitted on bearing areas, and grate must seat in its frame without rocking.

MINIMUM DEPTH: The minimum depth is per the cover requirements for that pipe type.

OPENINGS: Obtain the Engineer's approval for any pipe opening greater than 4" from the outside of the pipe to the structure. Fill all voids per CMS 611.

DOWELS: Furnish four 1"x18" dowels for concrete pavement or gutter blockout. See ODOT SCD BP–2.2 for dowel details.

BLOCKOUT: Pave blockouts with 4000 psi compressive strength concrete in PCC pavement or gutter. Blockouts are paid for as part of the catch basin quantities because of the castings. Cast a 4000 psi compressive strength concrete apron, the size of the 2'–0" gutter blockout, in place in asphalt pavement (no dowels required) with the cost included in the catch basin bid price. No deduction is made in curb quantities.

PAYMENT: All materials and labor, including excavation and backfilling, are paid for under Item 611Spec – Manhole Mass7030.

ADJUSTMENT: No brick shall be used to adjust castings height. See Adjustment detail this sheet.

BASE: Manhole 3 is shown with a monolithic floor and riser which may be cast in one or two operations. A permissible alternate is to cast and ship the floor and barrel separately. Provide openings for inlet and outlet pipes, either when the unit is cast or later, to meet project requirement. Bottom channels may be formed of concrete, precast in the base or field constructed.

RISER SECTIONS: Openings for 18" and smaller inlet pipes may either prefabricated or cut in field provided the sides of pipe at the springline do not project into the manhole.

JOINT SEAL: Furnish flexible gasket joints per CMS 706.11.

OPENING: The maximum pipe opening is the O.D. of the pipe being supplied plus 2" when fabricated or field cut. Fill any voids per CMS 611.

MATERIALS: Provide materials for bases and other precast sections, including reinforcement not specified here, that meet the requirements of CMS 706.13

TOP SLAB REBAR: Use epoxy coated reinforcing steel within the top slab.

MAXIMUM PIPE SIZE		
BASE I.D.	MIN. "t"	MAX. PIPE SIZE
60"	5"	36"
72"	6"	48"
84"	7"	54"
90"	7 ½"	60"
96"	8"	66"
108"	9"	72"

NW NE SW SE N

VERTICAL FEET 200 100 0

HORIZONTAL SCALE IN FEET 200 100 0

CHECKED BY: KAD

DATE: July, 2018

DRAWN BY: BMH

DATE: July, 2018

REVISIONS: DESCRIPTION | DATE

Massillon Standard Construction Details

MH–MASS7030
City of Massillon
Stark County, Ohio

CIVPRO ENGINEERING
ENGINEERS–SURVEYORS–CONSTRUCTION MANAGERS
4450 BELDEN VILLAGE STREET NW, SUITE 800 CANTON, OH 44718
PHONE: (330) 268–3734 EMAIL: KADMON@CIVPROENGINEERING.COM
WWW.CIVPROENGINEERING.COM

DRAWING NAME: MassillonStd2

REF NUMBER:

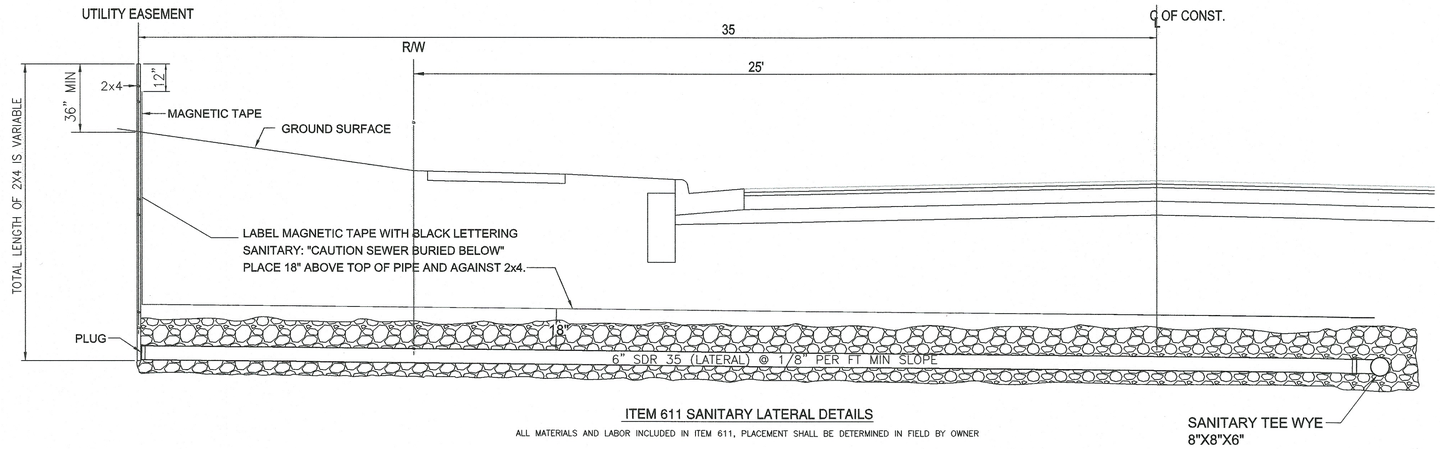

ITEM 611 SANITARY LATERAL DETAILS

ALL MATERIALS AND LABOR INCLUDED IN ITEM 611, PLACEMENT SHALL BE DETERMINED IN FIELD BY OWNER

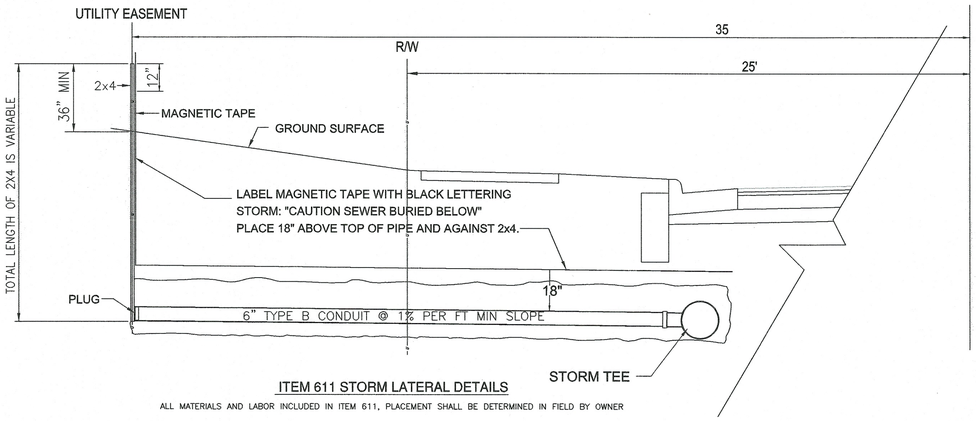

ITEM 611 STORM LATERAL DETAILS

ALL MATERIALS AND LABOR INCLUDED IN ITEM 611, PLACEMENT SHALL BE DETERMINED IN FIELD BY OWNER

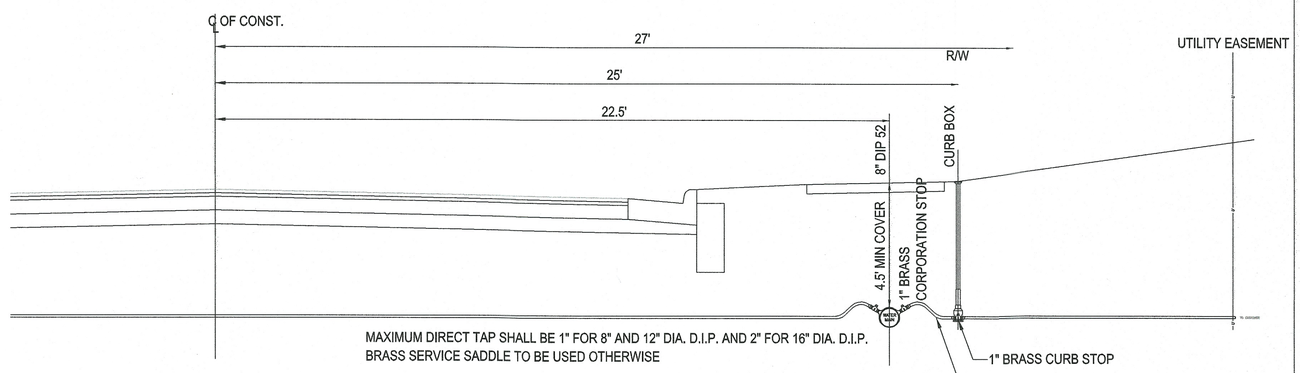

TYPICAL WATER SERVICE

NOT TO SCALE

NW NE SW SE

VERTICAL IN FEET

NTS

HORIZONTAL SCALE IN FEET

CHECKED BY: KAD

DATE: July, 2018

DRAWN BY: BMH

DATE: July, 2018

REVISIONS:

DATE	DESCRIPTION

Westbrook Estates Phase 5

Service Details

City of Massillon

Stark County, Ohio

CIVPRO ENGINEERING

ENGINEERS • SURVEYORS • CONSTRUCTION MANAGERS

4450 BELDEN VILLAGE STREET NW, SUITE 800, CANTON, OH 44718

PHONE: (330) 268-3704 EMAIL: KAD@CIVPROENGINEERING.COM

WWW.CIVPROENGINEERING.COM

DRAWING NAME: MSS Service Details

REF NUMBER:

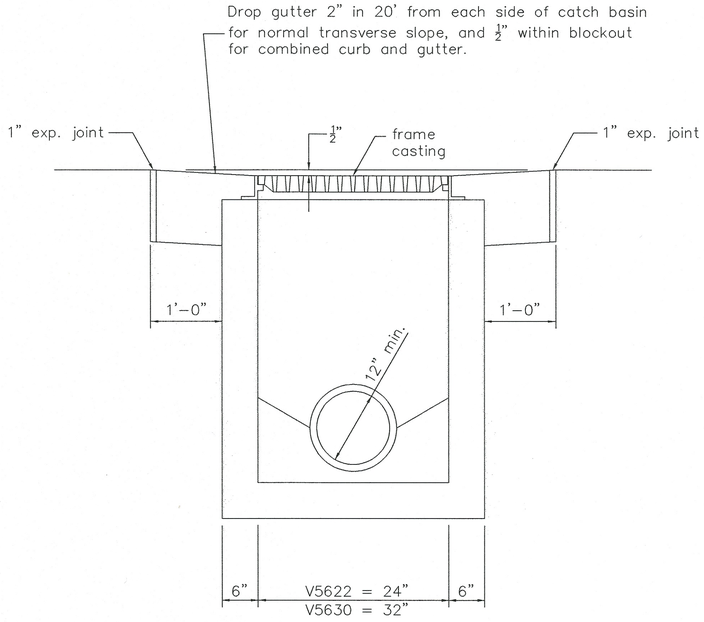

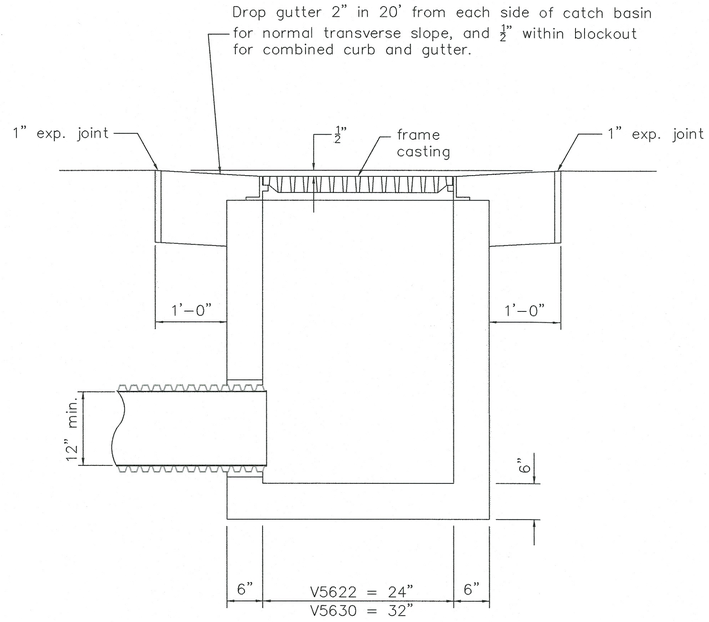

GRATES: Two required. For details, see EJ V5630. provide Grate V5630 unless the plans specifically require different grate.

CASTINGS: Provide a design essentially the same and equally as strong as the the one shown. Below is a list of approved EJ

MASS–V5622
Frame = V5622
Grate = V5622
MASS–V5630
Frame = V5630
Grate = V5630

BEARING AREAS: Fit and finish the frame and grate to provide a firm seat and even seat. No projections are permitted on bearing areas, and grate must seat in its frame without rocking.

PRECAST CONSTRUCTION: Meet CMS 706.13 concrete requirements. Provide precast walls at least 6" thick with sufficient reinforcing to permit shipping and placement without damage. Reduce the wall thickness from the outside.

MINIMUM DEPTH: The minimum depth is per the cover requirements for that pipe type.

OPENINGS: Obtain the Engineer's approval for any pipe opening greater than 4" from the outside of the pipe to the structure. Fill all voids per CMS 611.

DOWELS: Furnish four 1"x18" dowels for concrete pavement or gutter blockout. See SCD BP–2.2 for dowel details.

BLOCKOUT: Pave blockouts with 4000 psi compressive strength concrete in PCC pavement or gutter. Blockouts are paid for as part of the catch basin quantities because of the castings. Cast a 4000 psi compressive strength concrete apron, the size of the 2'–0" gutter blockout, in place in asphalt pavement (no dowels required) with the cost included in the catch basin bid price. No deduction is made in curb quantities.

PAYMENT: All materials and labor, including excavation and backfilling, are paid for under Item 611Spec – Catch Basin, Massv5630.

ADJUSTMENT: No brick shall be used to adjust castings height. See Adjustment detail this sheet.

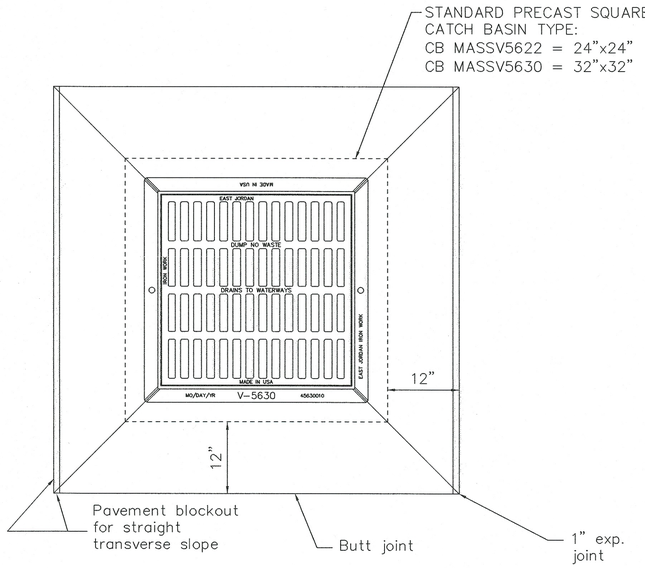

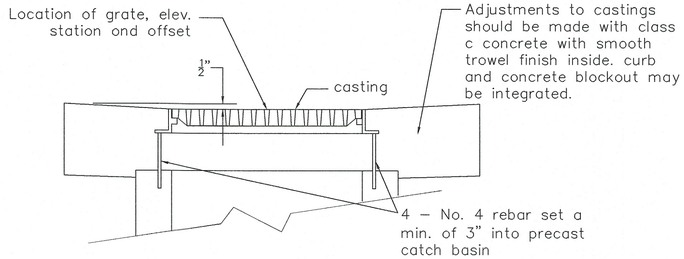

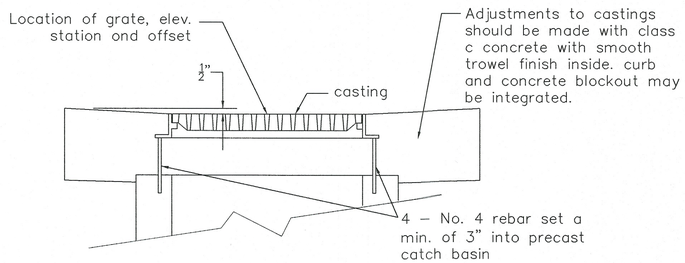

CASTING ADJUSTMENT

NW NE N SW SE

VERTICAL IN FEET 200 100 0

HORIZONTAL SCALE IN FEET 200 100 0

CHECKED BY: KAD
DATE: July, 2018
DRAWN BY: BMH
DATE: July, 2018

REVISIONS: DESCRIPTION | DATE

Massillon Standard Construction Details

CB–MASSV5622 AND CB–MASSV5630

City of Massillon
Stark County, Ohio

CIVPRO ENGINEERING
ENGINEERS–SURVEYORS–CONSTRUCTION MANAGERS
4450 BELDEN VILLAGE STREET NW, SUITE 800 CANTON, OH 44718
PHONE: (330) 268–3734 EMAIL: KAD@CIVPROENGINEERING.COM
WWW.CIVPROENGINEERING.COM

DRAWING NAME: MassillonStd3
REF NUMBER:

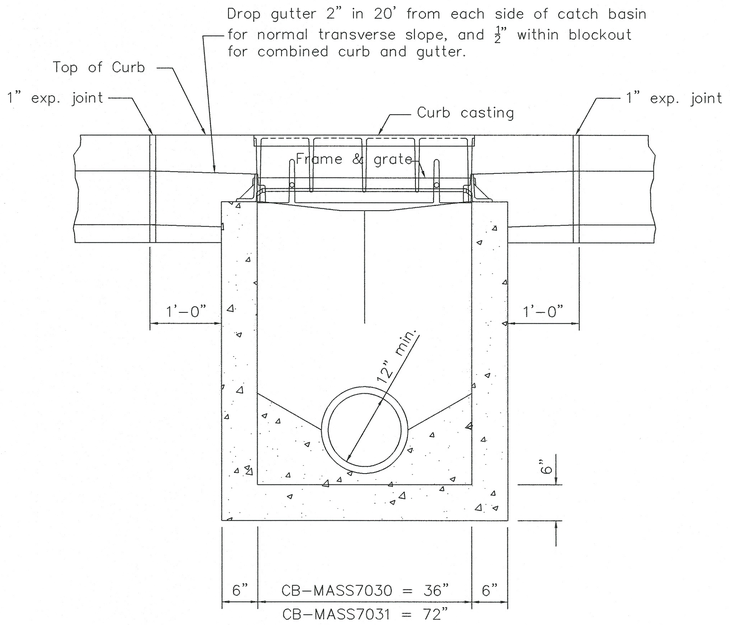

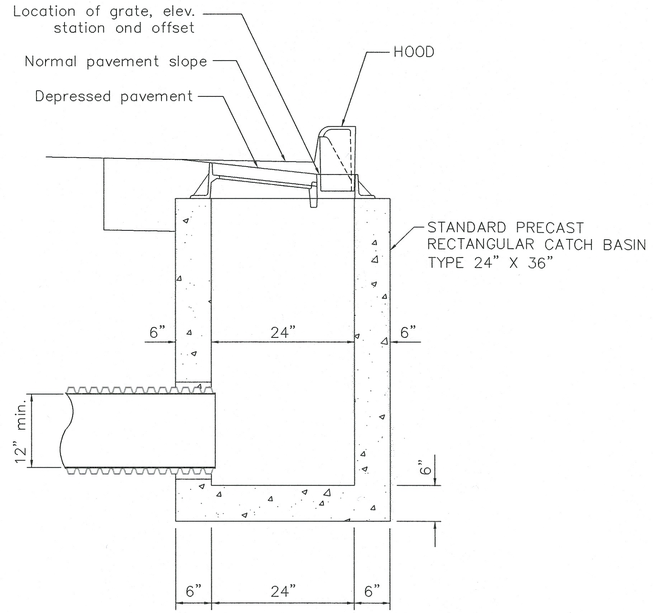

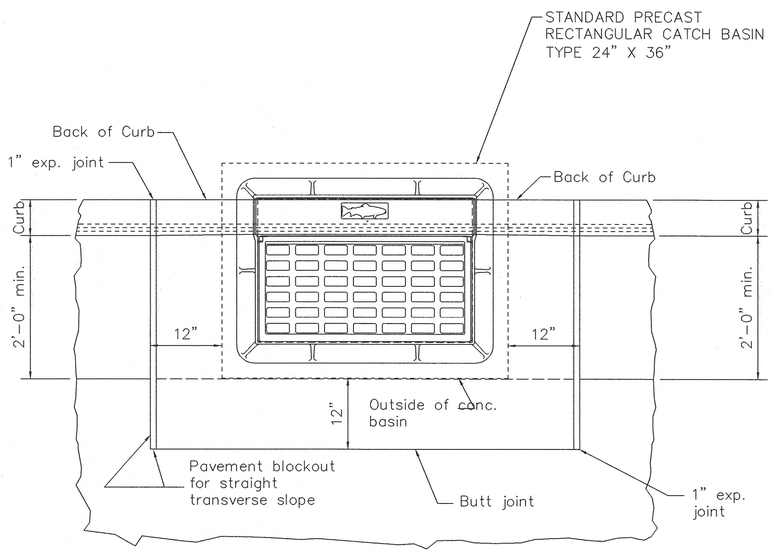

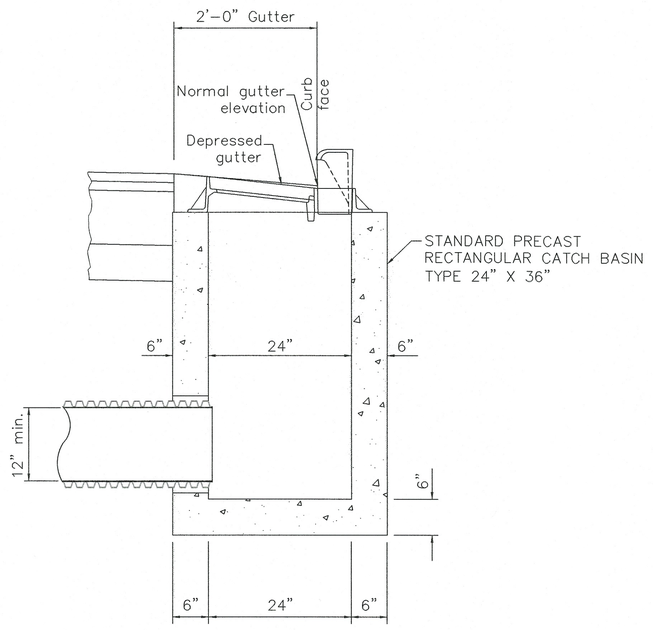

GRATES: Two required. For details, see EJ 7030Z. provide Grate M2 unless the plans specifically require the bicycle safety grate.

CASTINGS: Provide a design essentially the same and equally as strong as the the one shown. Below is a list of approved EJ

Frame	=	7030 Z, 7031 Z
Grate	=	7030 M2,
	=	7030 M3 for bicycle safety
Hood	=	7030 T1
		7030 T3 for drop curb areas

BEARING AREAS: Fit and finish the frame and grate to provide a firm seat and even seat. No projections are permitted on bearing areas, and grate must seat in its frame without rocking.

PRECAST CONSTRUCTION: Meet CMS 706.13 concrete requirements. Provide precast walls at least 6" thick with sufficient reinforcing to permit shipping and placement without damage. Reduce the wall thickness from the outside.

MINIMUM DEPTH: The minimum depth is per the cover requirements for that pipe type.

OPENINGS: Obtain the Engineer's approval for any pipe opening greater than 4" from the outside of the pipe to the structure. Fill all voids per CMS 611.

DOWELS: Furnish four 1"x18" dowels for concrete pavement or gutter blockout. See SCD BP–2.2 for dowel details.

BLOCKOUT: Pave blockouts with 4000 psi compressive strength concrete in PCC pavement or gutter. Blockouts are paid for as part of the catch basin quantities because of the castings. Cast a 4000 psi compressive strength concrete apron, the size of the 2'–0" gutter blockout, in place in asphalt pavement (no dowels required) with the cost included in the catch basin bid price. No deduction is made in curb quantities.

PAYMENT: All materials and labor, including excavation and backfilling, are paid for under Item 611Spec – Catch Basin, Mass7030.

ADJUSTMENT: No brick shall be used to adjust castings height. See Adjustment detail this sheet.

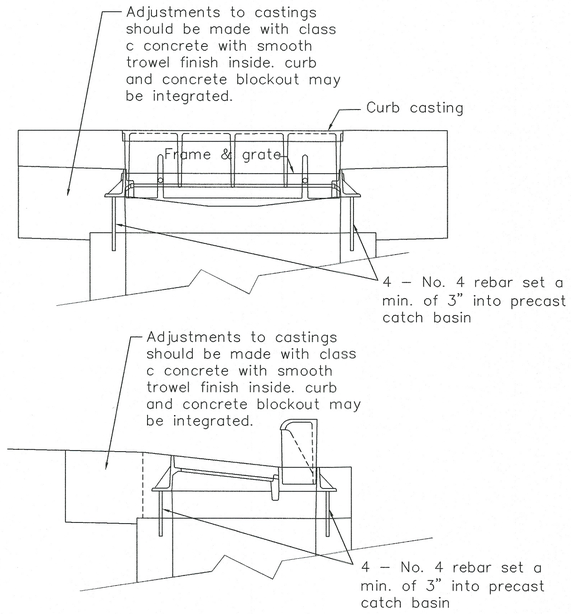

CASTING ADJUSTMENT

NW NE N SW SE

VERTICAL IN FEET 200 100 0

HORIZONTAL SCALE IN FEET 200 100 0

CHECKED BY: KAD
DATE: July, 2018
DRAWN BY: BMH
DATE: July, 2018

REVISIONS:

DESCRIPTION	DATE

Massillon Standard Construction Details
CB–MASS7030 AND CB–MASS7031
City of Massillon
Stark County, Ohio

CIVPRO ENGINEERING
ENGINEERS–SURVEYORS–CONSTRUCTION MANAGERS
4450 BELDEN VILLAGE STREET NW, SUITE 800 CANTON, OH 44718
PHONE: (330) 268-3734 EMAIL: KAD@CIVPROENGINEERING.COM
WWW.CIVPROENGINEERING.COM

DRAWING NAME: MassillonStd1
REF NUMBER:

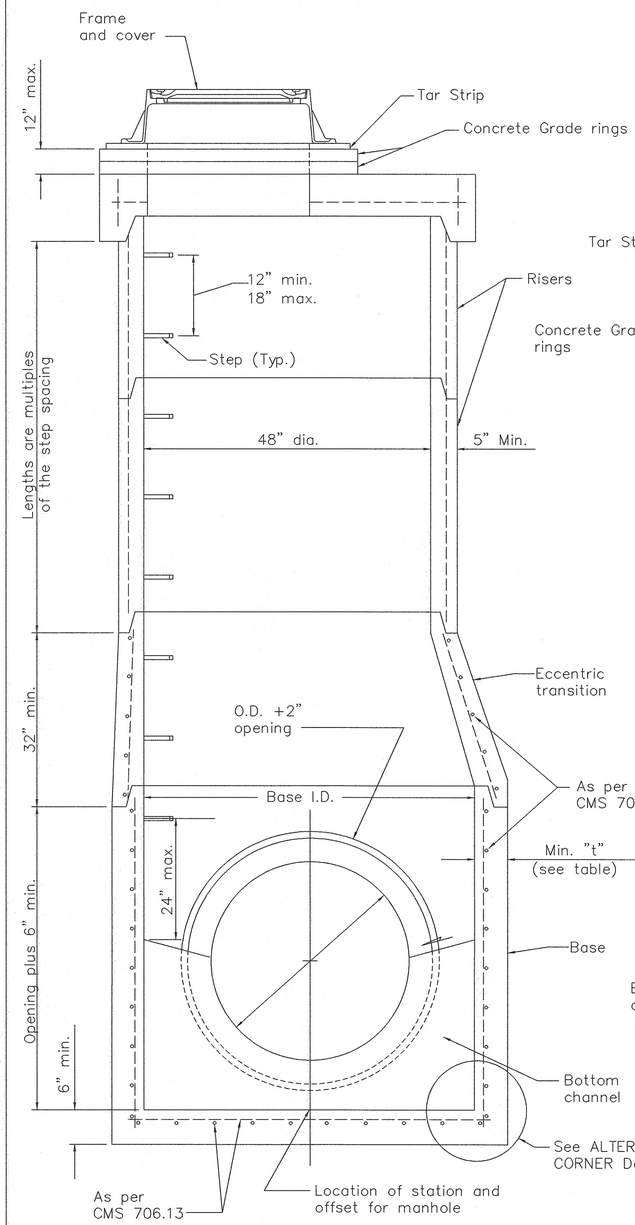

60" to 108" PRECAST BASE

SEE TABLE FOR MAXIMUM PIPE SIZES

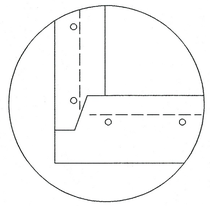

ALTERNATE CORNER DETAIL

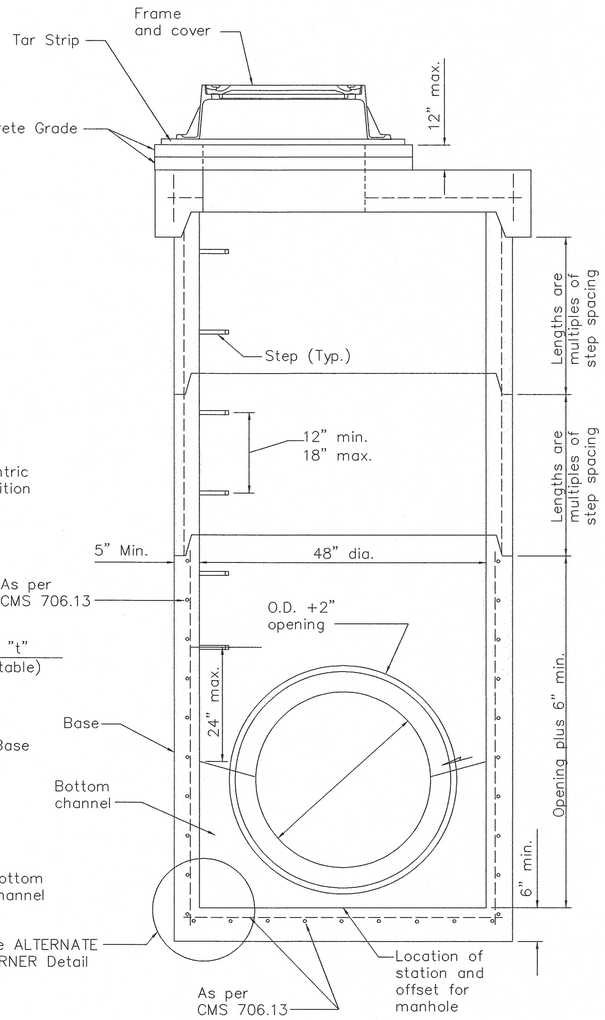

24" PRECAST BASE

FOR 30" AND SMALLER PIPE

SECTION VIEWS OF REINFORCED PRECAST MANHOLES

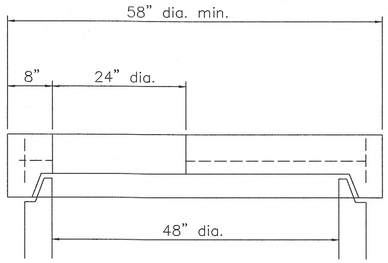

FLAT SLAB TOP

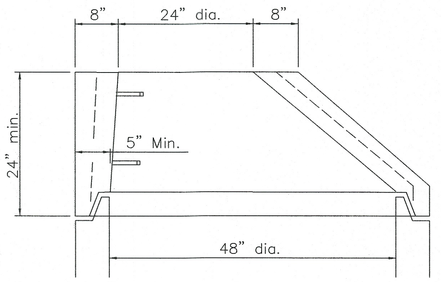

ALTERNATE ECCENTRIC CONE TOP

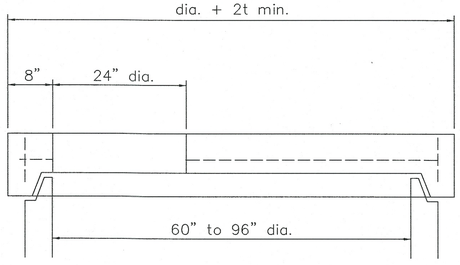

FLAT SLAB TOP

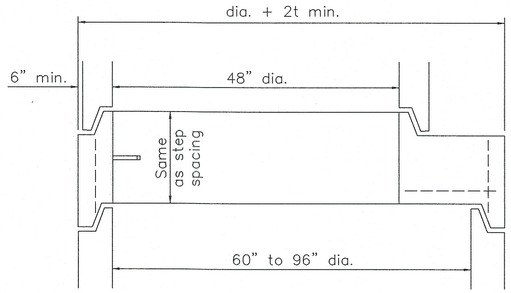

FLAT SLAB TRANSITION

MAXIMUM PIPE SIZE		
BASE I.D.	MIN. "t"	MAX. PIPE SIZE
60"	5"	36"
72"	6"	48"
84"	7"	54"
90"	7 1/2"	60"
96"	8"	66"
108"	9"	72"

GENERAL: With normal soil and site conditions, this standard precast manhole may be used for any required manhole depth. Cast and assemble sections of the precast manhole with either all tongue or all groove ends up. Lift holes may be provided in each section for handling. Leave handling device for flat slab in place.

CASTINGS: Provide a design essentially the same and equally as strong as the the one shown. Below is a list of approved EJ

DRAINAGE: Cover = Massillon 1040A
Cover = 1040 M3 ADA(WHEN SPECIFIED)
Frame = 1048

SANITARY: Cover = Massillon 1040AGS
Frame = 1048

TOP: Provide a flat slab for this section unless an eccentric cone is specified.

TRANSITION (OR REDUCER): This section can be either eccentric cone or flat slab.

BASE: Manhole is shown with a monolithic floor and riser which may be cast in one or two operations. A permissible alternate is to cast and ship the floor and barrel separately. Provide openings for inlet and outlet pipes, either when the unit is cast or later, to meet project requirement. Bottom channels may be formed of concrete, precast in the base or field constructed.

RISER SECTIONS: Openings for 18" and smaller inlet pipes may either prefabricated or cut in field provided the sides of pipe at the springline do not project into the manhole.

CONNECTIONS: Connections between precast manhole sections and pipes on sanitary sewers may be sealed with a resilient connectors conforming to ASTM C 923.

JOINT SEAL: Furnish resilient seal between precast manhole sections on sanitary sewers and flexible gasket joints per ASTM C-443.

OPENING: The maximum pipe opening is the O.D. of the pipe being supplied plus 2" when fabricated or field cut. Fill any drainage manhole voids per CMS 611.

MATERIALS: Provide materials for bases and other precast sections, including reinforcement not specified here, that meet the requirements of C-478

DROP PIPE: When specified on the plans, construct drop pipe as shown on SCD MASS1048-DROP.

TOP SLAB REBAR: Use epoxy coated reinforcing steel within the top slab.

NW NE SW SE N

VERTICAL IN FEET 200 100 0

HORIZONTAL SCALE IN FEET 200 100 0

CHECKED BY: KAD
DATE: July, 2018
DRAWN BY: BMH
DATE: July, 2018

REVISIONS: DESCRIPTION | DATE

Massillon Standard Construction Details

MH-MASS1048A AND MH-MASS1048AGS

City of Massillon
Stark County, Ohio

CIVPRO ENGINEERING
ENGINEERS-SURVEYORS-CONSTRUCTION MANAGERS
4450 BELDEN VILLAGE STREET NW, SUITE 800 CANTON, OH 44718
PHONE: (330) 268-3734 EMAIL: KADAD@VPROENGINEERING.COM
WWW.CIVPROENGINEERING.COM

DRAWING NAME: MassillonStd4

REF NUMBER:

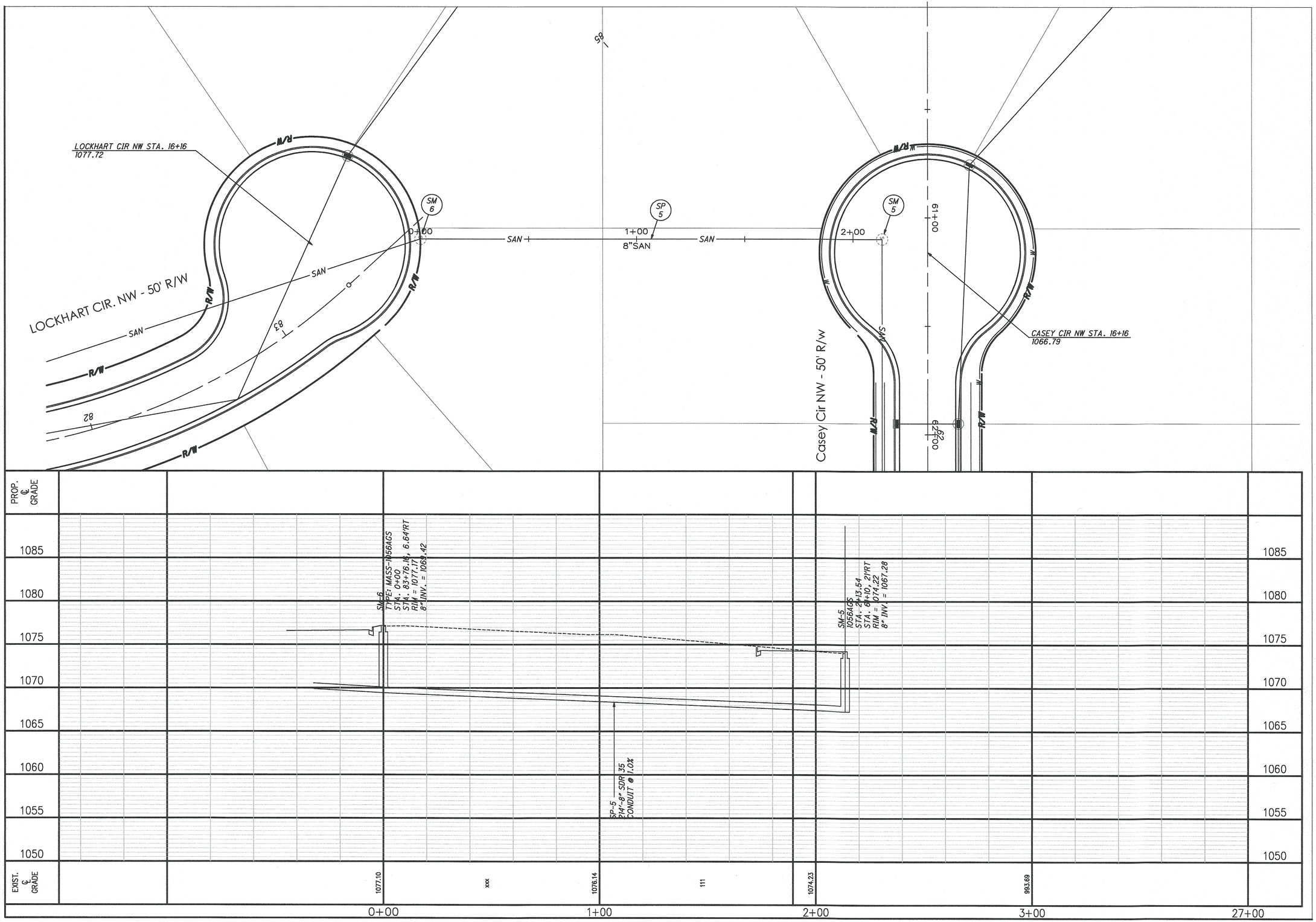

VERTICAL IN FEET

HORIZONTAL SCALE IN FEET

CHECKED BY: KAD

DATE: July, 2018

DRAWN BY: BMH

DATE: July, 2018

REVISIONS:

DATE	DESCRIPTION

Westbrook Estates Phase 5

Sanitary Sewer Plan and Profile

City of Massillon

Stark County, Ohio

CIVPRO ENGINEERING
ENGINEERS–SURVEYORS–CONSTRUCTION MANAGERS
4450 BELDEN VILLAGE STREET NW, SUITE 800 CANTON, OH 44718
PHONE: (330) 268-3734 EMAIL: KAD@CIVPROENGINEERING.COM
WWW.CIVPROENGINEERING.COM

DRAWING NAME:

REF NUMBER:

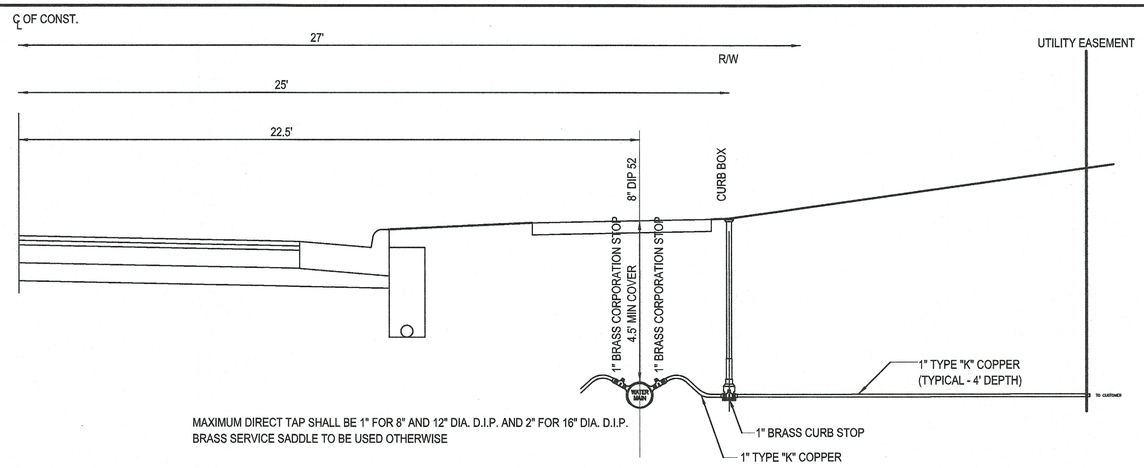

MAXIMUM DIRECT TAP SHALL BE 1" FOR 8" AND 12" DIA. D.I.P. AND 2" FOR 16" DIA. D.I.P.
BRASS SERVICE SADDLE TO BE USED OTHERWISE

TYPICAL SERVICE CONNECTION

NOT TO SCALE

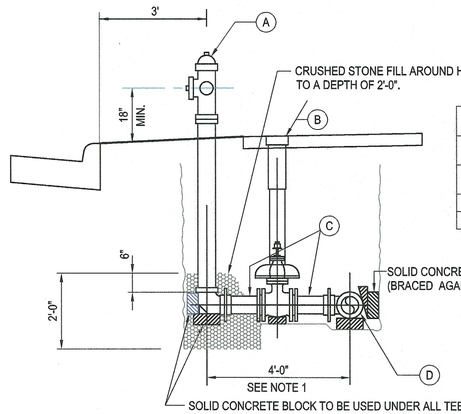

ITEM	DESCRIPTION
A	HYDRANT ASSEMBLY AS APPROVED BY AQUA OHIO, INC.
B	6" M.J. GATE VALVE, 3 PIECE VALVE BOX
C	M.J. ANCHOR COUPLING X 12"L
D	STANDARD M.J. TEE

1. THE DISTANCE FROM THE CENTERLINE OF THE MAIN TO THE CENTERLINE OF THE HYDRANT WILL BE 4' EXCEPT WHEN INDIVIDUAL CIRCUMSTANCES PROVE IT TO BE INFEASIBLE. WHEN SUCH CIRCUMSTANCES OCCUR, THE LENGTH OF THE LEAD WILL BE NOTED ON THE DRAWINGS WITH THE STATIONING.

TYPICAL FIRE HYDRANT ASSEMBLY TYPE II

NOT TO SCALE

OHIO E.P.A. WATER MAIN NOTES:

1. THE SYSTEM SHALL MAINTAIN A MINIMUM PRESSURE OF 20PSI (140kpa) AT THE GROUND LEVEL AT ALL POINTS IN THE DISTRIBUTION SYSTEM UNDER ALL CONDITIONS OF FLOW.

2. BOOSTER PUMPS ARE NOT PERMITTED ON THE SERVICE CONNECTIONS.

3. ALL WATERLINE DISINFECTION SHALL BE IN ACCORDANCE WITH AWWA C-651.

4. A 10 FOOT MINIMUM HORIZONTAL CLEARANCE SHALL BE MAINTAINED FROM THE OUTSIDE EDGE OF ALL WATER MAIN PIPE TO THE OUTSIDE EDGE OF ALL STORM SEWER PIPE.

5. A 10 FOOT MINIMUM HORIZONTAL CLEARANCE SHALL BE MAINTAINED FROM THE OUTSIDE EDGE OF ALL WATER MAIN PIPE TO THE OUTSIDE EDGE OF ALL SANITARY SEWER PIPE.

6. A 18 INCH MINIMUM VERTICAL CLEARANCE SHALL BE MAINTAINED FROM THE OUTSIDE EDGE OF ALL WATER MAIN PIPE TO THE OUTSIDE EDGE OF ALL STORM SEWER, SANITARY SEWER OF FORCE MAIN PIPE.

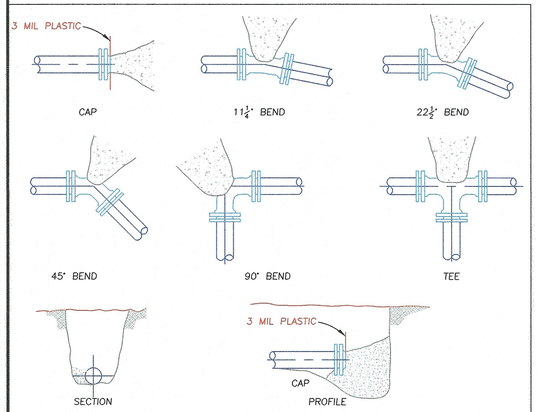

FITTINGS SIZES	BEARING AREA OF BLOCK IN SQUARE FEET FOR HORIZONTAL BENDS *				
	TEES & ENDS	90° BEND	45° BEND	22½° BEND	11¼° BEND
4	1.5	2	1.5	1.5	1.5
6	3	4	2	1.5	1.5
8	4.5	7	3.5	2	1.5
10	7.5	10.5	5	3	1.5
12	10.5	15	8	4	2.5

* AND VERTICAL BENDS UP

NOTES:
1). ALL BLOCKING SHALL BE POURED AGAINST FIRM, UNDISTURBED SOIL.
2). BEARING AREA AT FITTINGS NOT GIVEN IN BEARING TABLE SHALL BE AS DIRECTED BY THE ENGINEER.
3). WHEN POURING AGAINST PLUGS AND BLIND FLANGES SET A PIECE OF 3 MIL PLASTIC AGAINST FITTING, TO KEEP CONCRETE OFF BOLTS.
4). LAYOUT TO BE APPROVED BY ENGINEER PRIOR TO CONCRETE POUR.
5). THRUST BLOCKS AND DEADMEN FOR VERTICAL BENDS DOWN SHALL BE AS SHOWN ON SPECIFIC DETAIL DRAWINGS OR APPROVED BY ENGINEER PRIOR TO CONCRETE PLACEMENT.
6). THE CONTRACTOR MAY SUBSTITUTE A RESTRAINT SYSTEM SUCH AS FIELD-LOK GASKETS IN LIEU OF THRUST BLOCKS WITH APPROVAL FROM AQUA OHIO.

AQUA OHIO, INC.
SERVICE CENTER, BOARDMAN, OH. 44512
AN AFFILIATE OF AQUA AMERICA, INC.

SUBJECT CONCRETE THRUST BLOCKING DETAILS
NOT TO SCALE

revised: June, 2006
drawn by: D. Warrick | date: March, 1994
division CORPORATE STANDARDS
approved Brian T. Bisson, P.E. | sheet

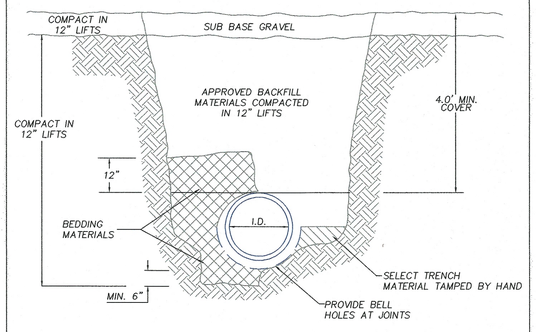

ROCK TRENCH EARTH TRENCH

AQUA OHIO, INC.
SERVICE CENTER, BOARDMAN, OH. 44512
AN AFFILIATE OF AQUA AMERICA, INC.

SUBJECT TYPICAL TRENCH DETAIL
NOT TO SCALE

revised
drawn D. Warrick | date March, 1994
district CORPORATE STANDARDS
approved R. Byrom, P.E. | sheet

- Field-Lok gaskets or other approved pipe restraint systems will be used to restrain pipe as shown on the plan drawings, or with prior approval by Aqua for the following situations:
  1. For vertical bends in lieu of dead-man concrete restraint
  2. For vertical and horizontal bends installed in poor soil conditions
  3. For hydrants or bends with sloping ground behind the point of thrust

Note: Meg-a-lugs or approved equal shall be used to restrain fittings and valves

- Thrust blocks will normally be used for all horizontal bends. The Contractor shall get prior approval from Aqua to substitute a restraint system in lieu of thrust blocking for horizontal bends.

- Contractor shall supply all field-lok gaskets

Linear Feet of Pipe Restraint Required (either side of fitting)

Pipe Dia. (In.)	Dead End	90°	45°	22.5°	11.25°	Vert. Up	Vert. Down	Tee Branch
8	108	54	18	0	0	18	36	90
12	162	90	36	18	0	36	72	144
16	214	118	49	23	12	12	21	200
24	304	165	68	33	16	16	30	289

Construction Criteria:
1. For working and/or test pressures< 150 psi.
2. Type 2 trench with 4.5 ft. of cover
3. Polywrapped pipe
4. 18 ft. pipe lengths
5. Fittings restrained with meg-a-lugs

Note: If field conditions do not conform to the noted construction criteria, the contractor shall get specific approval from Aqua for the number of restrained joints.

AQUA OHIO, INC.
SERVICE CENTER, BOARDMAN, OH. 44512
AN AFFILIATE OF AQUA AMERICA, INC.

SUBJECT THRUST RESTRAINT WITH FIELD–LOK GASKETS
NOT TO SCALE

revised:
drawn by: D. Warrick | date: June, 2006
division CORPORATE STANDARDS
approved Brian T. Bisson, P.E. | sheet

MATERIAL SPECIFICATIONS

DUCTILE IRON PIPE. Type required: push-on joints, cement lined, pressure class 52 for 4 inch through 16 inch, manufacturing standards AWWA C150 and C151. Polyethylene encasement shall be installed on all ductile pipe and fittings.

DUCTILE IRON FITTINGS. (tees, crosses, bends, reducers, sleeves, couplings and plugs.) Type required: mechanical joint, tees, crosses, bends and reducers are to be cement lined; working pressure rating 250 psi, manufacturing standards ANSI A21.53, ANSI A21.4 and ANSI A21.10. Compact style is acceptable. Retainer glands shall be installed wherever there is a possibility of joint separation.

FIRE HYDRANTS. Type required: post type, breakable flange design for traffic collisions, 5 1/4" diameter main valve, one 4 ½" pumper and two 2 ½" hose nozzles, 6" MJ inlet, main valve to open left, direction of opening to be indicated with arrow cast on hydrant, to be designed for 5 foot trench, National Standard threads on nozzles, O-ring packing preferred, type 304 stainless steel bolts and nuts, operating nut and nut on caps: 1 ½" pentagon, color yellow paint on body trimmed with red paint on bonnet and caps, AWWA standard C502, Mueller Centurion A423, US Pipe M-94 or Clow Medallion. Hydrant shall be outfitted with 5" Storz hydrant connection, meeting fire department specifications.

TAPPING VALVES. Type required: Resilient seat, iron body, stainless steel bonnet bolts and nuts, mechanical joint accessories, non-rising stem, for underground service, O-ring packing preferred, **OPEN RIGHT** (clockwise) 2 inch square operating nut, manufacturing standards and pressure ratings AWWA specification C500.

4" THROUGH 12" GATE VALVES. Type required: resilient seat, iron body, stainless steel bonnet bolts and nuts, mechanical joint accessories, non-rising stem, for underground service, O-ring packing preferred, **OPEN RIGHT** (clockwise), 2 inch square operating nut, manufacturing standards and pressure ratings AWWA C515, Mueller A-2361 or equal.

VALVE BOXES. Type required: two piece, cast iron, screw type for adjustable height, height range to be approximately 36 to 60 inches. They are to include a well fitting cast iron lid, the word "WATER" to be cast on lid.

2" WATER MAIN. 2" water main shall be soft drawn type "K" copper tubing or high density polyethylene plastic (HDPE), copper tube size, as called out on the plan. If HDPE is used, it shall be 200 psi, SDR 9 with marking tape and a 12 gage copper tracer wire laid in the trench. Brass compression fittings shall be used. Stainless steel stiffeners are necessary at each joint.

POLYETHYLENE ENCASEMENT. Type required: Eight mil thick polyethylene tube manufactured in accordance with ANSI/AWWA C105/A21.5. Polyethylene adhesive tape, 1 ½" wide, is to seal joints.

BLOW OFF ASSEMBLIES. Type required: Kupferle Foundry TF500 or approved equal. Install in valve box. Install 2" curb stop with curb box ahead of each blow off.

Revised 02/20/17

NW NE N SW SE

VERTICAL IN FEET 1 .5 0

HORIZONTAL SCALE IN FEET 1 .5 0

CHECKED BY: KAD
DATE: July, 2018
DRAWN BY: BMH
DATE: July, 2018

REVISIONS: DESCRIPTION | DATE

CIVPRO ENGINEERING
ENGINEERS–SURVEYORS–CONSTRUCTION MANAGERS
4450 BELDEN VILLAGE STREET NW, SUITE 800 CANTON, OH 44718
PHONE: (330) 268–1734 EMAIL: KADKINS@CIVILPROENGINEERING.COM
WWW.CIVILPROENGINEERING.COM

Westbrook Estates Phase 5
Waterline Details
City of Massillon
Stark County, Ohio

DRAWING NAME:
REF NUMBER:

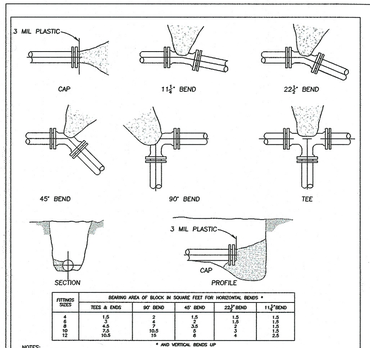

FITTING SIZES	BEARING AREA OF BLOCK IN SQUARE FEET FOR HORIZONTAL BENDS *				
	TEES & ENDS	90° BEND	45° BEND	22½° BEND	11¼° BEND
4	1.0	1.0	1.0	1.0	1.0
6	2.5	2	1.0	1.0	1.0
8	4.5	3.5	2	1	1.0
10	10.5	8	5	2	1.0
12	15	11	7	4	2.0

* AND VERTICAL BENDS UP

NOTES:
1). ALL BLOCKING SHALL BE POURED AGAINST FIRM, UNDISTURBED SOIL
2). BEARING AREA AT FITTINGS NOT GIVEN IN BEARING TABLE SHALL BE AS DIRECTED BY THE ENGINEER.
3). WHEN POURING AGAINST PLUGS AND BLIND FLANGES SET A PIECE OF 3 MIL PLASTIC AGAINST FITTING, TO KEEP CONCRETE OFF BOLTS.
4). LAYOUT TO BE APPROVED BY ENGINEER PRIOR TO CONCRETE POUR.
5). **THRUST BLOCKS AND DEADMEN FOR VERTICAL BENDS DOWN SHALL BE AS SHOWN ON SPECIFIC DETAIL DRAWINGS OR APPROVED BY ENGINEER PRIOR TO CONCRETE PLACEMENT.**
6). **THE CONTRACTOR MAY SUBSTITUTE A RESTRAINT SYSTEM SUCH AS FIELD-LOK GASKETS IN LIEU OF THRUST BLOCKS WITH APPROVAL FROM AQUA OHIO.**

AQUA OHIO, INC. — SERVICE CENTER, RIVERSIDE, OK. 44313 — AN AFFILIATE OF AQUA AMERICA, INC.

SUBJECT: CONCRETE THRUST BLOCKING DETAILS — NOT TO SCALE

revised: June, 2006 | division: CORPORATE STANDARDS
drawn by: D. Parrish | date: March, 1994 | approved: Brian T. Bimm, P.E. | sheet:

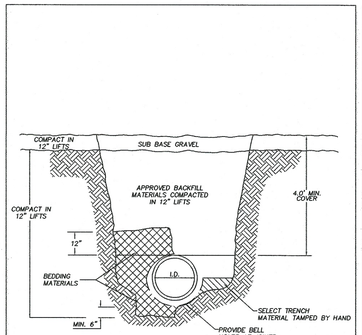

AQUA OHIO, INC. — SERVICE CENTER, RIVERSIDE, OK. 44313 — AN AFFILIATE OF AQUA AMERICA, INC.

SUBJECT: TYPICAL TRENCH DETAIL — NOT TO SCALE

revised: | division: CORPORATE STANDARDS
drawn: D. Parrish | date: March, 1994 | approved: B. Byrom, P.E. | sheet:

- Field-Lok gaskets or other approved pipe restraint systems will be used to restrain pipe as shown on the plan drawings, or with prior approval by Aqua for the following situations:
  1. For vertical bends in lieu of dead-man concrete restraint
  2. For vertical and horizontal bends installed in poor soil conditions
  3. For hydrants or bends with sloping ground behind the point of thrust

Note: Meg-a-lugs or approved equal shall be used to restrain fittings and valves

- Thrust blocks will normally be used for all horizontal bends. The Contractor shall get prior approval from Aqua to substitute a restraint system in lieu of thrust blocking for horizontal bends.
- Contractor shall supply all field-lok gaskets

Linear Feet of Pipe Restraint Required (either side of fitting)

Pipe Dia. (in.)	Dead End	90°	45°	22.5°	11.25°	Vert. Up	Vert. Down	Tee Branch
8	108	54	18	0	0	18	36	90
12	162	90	36	18	0	36	72	144
16	214	118	49	23	12	12	21	200
24	304	165	68	33	16	16	30	289

Construction Criteria:
1. For working and/or test pressures< 150 psi.
2. Type 2 trench with 4.5 ft. of cover
3. Polywrapped pipe
4. 18 ft. pipe lengths
5. Fittings restrained with meg-a-lugs

Note: If field conditions do not conform to the noted construction criteria, the contractor shall get specific approval from Aqua for the number of restrained joints.

AQUA OHIO, INC. — SERVICE CENTER, RIVERSIDE, OK. 44313 — AN AFFILIATE OF AQUA AMERICA, INC.

SUBJECT: THRUST RESTRAINT WITH FIELD-LOK GASKETS — NOT TO SCALE

revised: | division: CORPORATE STANDARDS
drawn by: D. Parrish | date: June, 2006 | approved: Brian T. Bimm, P.E. | sheet:

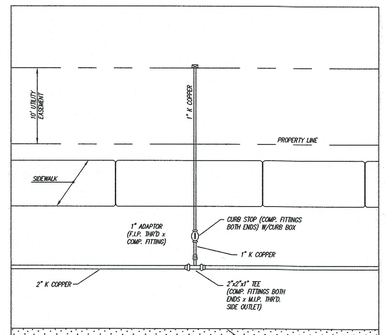

AQUA OHIO, INC. — SERVICE CENTER, RIVERSIDE, OK. 44313 — AN AFFILIATE OF AQUA AMERICA, INC.

SUBJECT: TYPICAL PRE-TAP PLAN — NOT TO SCALE

revised: | division: CORPORATE STANDARDS
drawn: R.C. Elwood | date: March, 1999 | approved: B. Byrom, P.E. | sheet:

Dim.	Standard Length
A	4'-9" Min.
B	4' to 7'
C	1'-6" Max.
D	2'-0" Min.
E	2'-0" Min.

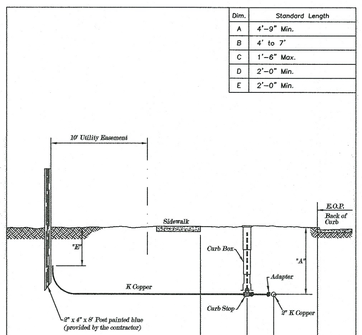

Profile

AQUA OHIO, INC. — SERVICE CENTER, RIVERSIDE, OK. 44313 — AN AFFILIATE OF AQUA AMERICA, INC.

SUBJECT: TYPICAL PRE-TAP CUL-DE-SAC LOTS ONLY — NOT TO SCALE

revised: | division: CORPORATE STANDARDS
drawn: D. Parrish | date: Jan., 1999 | approved: B. Byrom, P.E. | sheet:

NOTES
1. THE DISTANCE FROM THE CENTERLINE OF MAIN TO THE CENTERLINE OF HYDRANT WILL BE 5' EXCEPT WHEN INDIVIDUAL CIRCUMSTANCES PROVE IT TO BE INFEASIBLE. WHEN SUCH CIRCUMSTANCES OCCUR, THE LENGTH OF THE LEAD WILL BE NOTED ON THE DRAWINGS WITH THE STATIONING.
2. SOLID CONCRETE BLOCK TO BE USED UNDER ALL TEES, VALVES AND BEHIND AND UNDER HYDRANT ELBOW.
3. CRUSHED STONE FILL AROUND HYDRANT DRAIN AND TO A DEPTH OF 2'-0".
4. SOLID CONCRETE BLOCK WITH OAK WEDGES. (BRACED AGAINST UNDISTURBED SOIL)

ITEM	DESCRIPTION
A	HYDRANT ASSEMBLY AS APPROVED BY AQUA OHIO, INC.
B	6" M.J. GATE VALVE, 3 PIECE VALVE BOX
C	ANCHOR TEE (CLOW F-1217)
D	6" DUCTILE IRON PIPE WITH MEGA-LUGS FOR RETAINERS

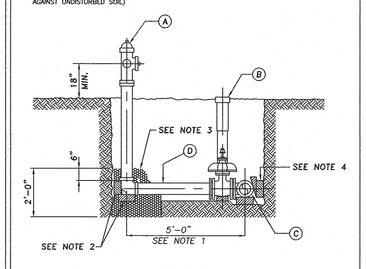

AQUA OHIO, INC. — SERVICE CENTER, RIVERSIDE, OK. 44313 — AN AFFILIATE OF AQUA AMERICA, INC.

SUBJECT: TYPICAL FIRE HYDRANT ASSEMBLY TYPE I — NOT TO SCALE

revised: | division: CORPORATE STANDARDS
drawn: D. Parrish | date: March, 1994 | approved: B. Byrom, P.E. | sheet:

NOTES
1. THE DISTANCE FROM THE CENTERLINE OF THE MAIN TO THE CENTERLINE OF HYDRANT WILL BE 5' EXCEPT WHEN INDIVIDUAL CIRCUMSTANCES PROVE IT TO BE INFEASIBLE. WHEN SUCH CIRCUMSTANCES OCCUR, THE LENGTH OF THE LEAD WILL BE NOTED ON THE DRAWINGS WITH THE STATIONING.
2. SOLID CONCRETE BLOCK TO BE USED UNDER ALL TEES, VALVES AND BEHIND AND UNDER HYDRANT ELBOW.
3. CRUSHED STONE FILL AROUND HYDRANT DRAIN AND TO A DEPTH OF 2'-0".
4. SOLID CONCRETE BLOCK WITH OAK WEDGES. (BRACED AGAINST UNDISTURBED SOIL)

ITEM	DESCRIPTION
A	HYDRANT ASSEMBLY AS APPROVED BY AQUA OHIO, INC.
B	6" M.J. GATE VALVE, 3 PIECE VALVE BOX
C	M.J. ANCHOR COUPLING X 12"L
D	STANDARD M.J. TEE

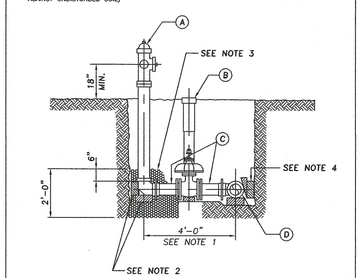

AQUA OHIO, INC. — SERVICE CENTER, RIVERSIDE, OK. 44313 — AN AFFILIATE OF AQUA AMERICA, INC.

SUBJECT: TYPICAL FIRE HYDRANT ASSEMBLY TYPE II — NOT TO SCALE

revised: | division: CORPORATE STANDARDS
drawn: D. Parrish | date: March, 1994 | approved: B. Byrom, P.E. | sheet:

NOTES
1. SOLID CONCRETE BLOCK TO BE USED UNDER ALL TEES, VALVES AND BEHIND AND UNDER HYDRANT ELBOW.
2. CRUSHED STONE FILL AROUND HYDRANT DRAIN AND TO A DEPTH OF 2'-0".
3. SOLID CONCRETE BLOCK WITH OAK WEDGES. (BRACED AGAINST UNDISTURBED SOIL)

ITEM	DESCRIPTION
A	HYDRANT ASSEMBLY AS APPROVED BY AQUA OHIO, INC.
B	6" M.J. GATE VALVE, 3 PIECE VALVE BOX
C	M.J. ANCHOR COUPLING X 12"L
D	ANCHOR TEE (CLOW F-1217)

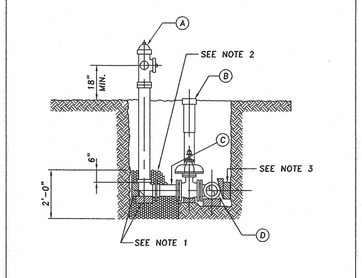

AQUA OHIO, INC. — SERVICE CENTER, RIVERSIDE, OK. 44313 — AN AFFILIATE OF AQUA AMERICA, INC.

SUBJECT: TYPICAL FIRE HYDRANT ASSEMBLY TYPE IIA — NOT TO SCALE

revised: | division: CORPORATE STANDARDS
drawn: D. Parrish | date: March, 1994 | approved: B. Byrom, P.E. | sheet:

NOTES
1. THE DISTANCE FROM THE CENTERLINE OF MAIN TO THE CENTERLINE OF HYDRANT WILL BE 5' EXCEPT WHEN INDIVIDUAL CIRCUMSTANCES PROVE IT TO BE INFEASIBLE. WHEN SUCH CIRCUMSTANCES OCCUR, THE LENGTH OF THE LEAD WILL BE NOTED ON THE DRAWINGS WITH THE STATIONING.
2. SOLID CONCRETE BLOCK TO BE USED UNDER ALL TEE'S, BENDS AND BEHIND AND UNDER HYDRANT ELBOW.
3. CRUSHED STONE FILL AROUND HYDRANT DRAIN AND TO A DEPTH OF 2'-0".
4. SOLID CONCRETE BLOCK WITH OAK WEDGES. (BRACED AGAINST UNDISTURBED SOIL)
5. PUMPER NOZZLE FACING STREET.

ITEM	DESCRIPTION
A	HYDRANT ASSEMBLY AS APPROVED BY AQUA OHIO, INC.
B	6" M.J. GATE VALVE, 3 PIECE VALVE BOX
C	ANCHOR COUPLING (F-1211)
D	ANCHOR ELBOW (F-1218)
E	STANDARD M.J. TEE

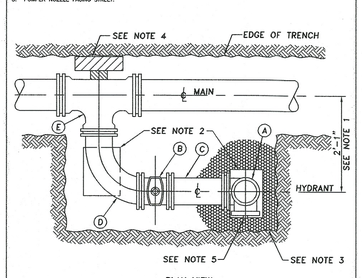

PLAN VIEW

AQUA OHIO, INC. — SERVICE CENTER, RIVERSIDE, OK. 44313 — AN AFFILIATE OF AQUA AMERICA, INC.

SUBJECT: TYPICAL FIRE HYDRANT ASSEMBLY TYPE III — NOT TO SCALE

revised: | division: CORPORATE STANDARDS
drawn: D. Parrish | date: March, 1994 | approved: B. Byrom, P.E. | sheet:

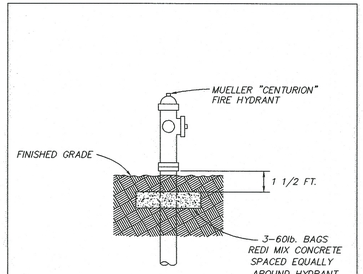

FIRE HYDRANT STABILIZATION

AQUA OHIO, INC. — SERVICE CENTER, RIVERSIDE, OK. 44313 — AN AFFILIATE OF AQUA AMERICA, INC.

SUBJECT: TYPICAL FIRE HYDRANT COLLAR L.S.D-Lake — NOT TO SCALE

revised: | division: CORPORATE STANDARDS
drawn: D. Parrish | date: June 1, 1981 | approved: | sheet:

TYPICAL AQUA OHIO, INC. OUTSIDE METER VAULT WITH 5/8" x 3/4" AND 1" METERS

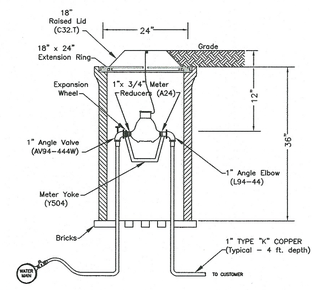

NOTES:
1. 24"(dia.) x 36" meter vaults may be constructed of corrigated plastic.
2. Contractor to remove and re-install meter at time of service renewal. Residents to be notified before shut off. (DO NOT CUT METER WIRE)

AQUA OHIO, INC.

SUBJECT: OUTSIDE METER SETTING FOR 5/8" x 3/4" AND 1" METERS WHERE BACKFLOW PREVENTION IS NOT NECESSARY

revised: | division: CORPORATE STANDARDS
drawn: D. Parrish | date: Jun., 2005 | approved: B. Byrom, P.E. | sheet:

AQUA OHIO, INC. TYPICAL SERVICE LINE INSTALLATION

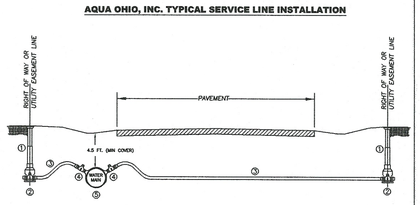

FITTINGS AND TYPE OF MATERIALS REQUIRED BY AQUA OHIO, INC.
① CURB BOX
② 1" BRASS CURB STOP
③ TYPE K COPPER (1" MINIMUM)
④ 1" BRASS CORPORATION STOP
⑤ MAXIMUM DIRECT TAP SHALL BE 1" FOR 8" AND 12" DIA. D.I.P. AND 2" FOR 16" DIA. D.I.P. BRASS SERVICE SADDLE TO BE USED OTHERWISE
* Residents to be notified before shut off

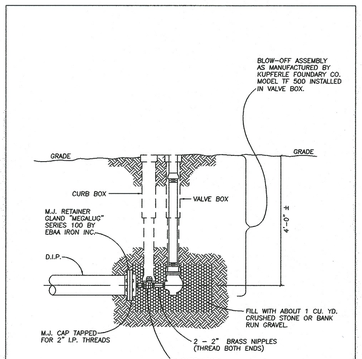

AQUA OHIO, INC.

SUBJECT: TYPICAL BLOW-OFF DETAIL — NOT TO SCALE

revised: | division: CORPORATE STANDARDS
drawn: D. Parrish | date: January, 2000 | approved: B. Byrom, P.E. | sheet:

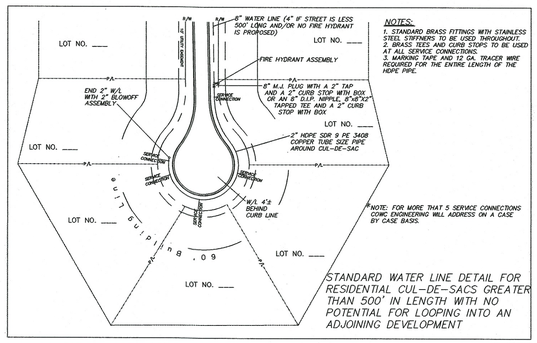

NOTES:
1. STANDARD BRASS FITTINGS WITH STAINLESS STEEL STIFFNERS TO BE USED THROUGHOUT.
2. BRASS TEES AND CURB STOPS TO BE USED AT ALL SERVICE CONNECTIONS.
3. MARKING TAPE AND 12 GA. TRACER WIRE REQUIRED FOR THE ENTIRE LENGTH OF THE HDPE PIPE.

NOTE: FOR MORE THAT 5 SERVICE CONNECTIONS CIVIC ENGINEERING WILL ADDRESS ON A CASE BY CASE BASIS.

STANDARD WATER LINE DETAIL FOR RESIDENTIAL CUL-DE-SACS GREATER THAN 500' IN LENGTH WITH NO POTENTIAL FOR LOOPING INTO AN ADJOINING DEVELOPMENT

NW NE SW SE N

VERTICAL FEET: 1, .5, 0

0 .5 1

HORIZONTAL SCALE IN FEET

CHECKED BY: KAD
DATE: July, 2018
DRAWN BY: BMH
DATE: July, 2018

REVISIONS: DATE | DESCRIPTION

Westbrook Estates Phase 5
Water Line Details
City of Massillon
Stark County, Ohio

CIVPRO ENGINEERING
ENGINEERS-SURVEYORS-CONSTRUCTION MANAGERS
4450 BELDEN VILLAGE STREET NW, SUITE 800 CANTON, OH 44718
PHONE: (330) 268-3734 EMAIL: KADROVPROENGINEERING.COM
WWW.CIVPROENGINEERING.COM

DRAWING NAME: xxxx.DWG
REF NUMBER:

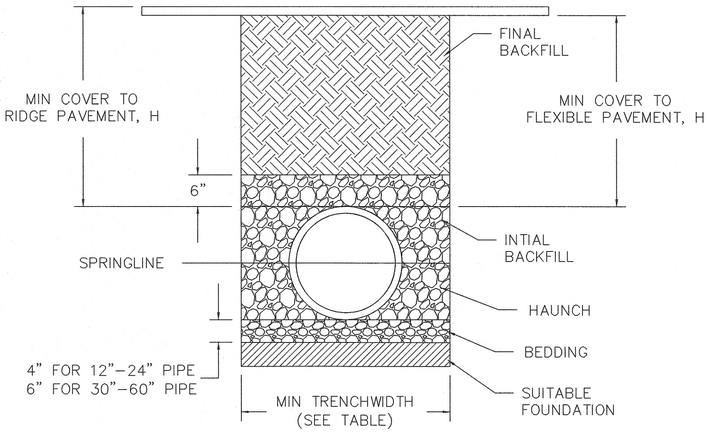

RECOMMENDED MINIMUM TRENCH WIDTHS

PIPE DIAM.	MIN. TRENCH WIDTH
4"	21'
6"	23'
8"	26'
10"	28'
12"	30'
15"	34'
18"	39'
24"	48'
30"	56'
36"	64'
42"	72'
48"	80'
54"	88'
60"	96'

NOTES:

1. ALL PIPE SYSTEMS SHALL BE INSTALLED IN ACCORDANCE WITH ASTM D2321, "STANDARD PRACTICE APPLICATION", LATEST ADDITION
2. MEASURES SHOULD BE TAKEN TO PREVENT MIGRATION OF NATIVE FINES INTO BACKFILL MATERIAL, WHEN REQUIRED.
3. FOUNDATION: WHERE TRENCH BOTTOM IS UNSTABLE, THE CONTRACTOR SHALL EXCAVATE TO A DEPTH REQUIRED BY THE ENGINEER AND REPLACE WITH SUITABLE MATERIAL AS SPECIFIED BY THE ENGINEER. AS AN ALTERNATIVE AND AT THE DISCRETION OF THE DESIGN ENGINEER, THE TRENCH BOTTOM MAY BE STABILIZED USING A GEOTEXTILE MATERIAL.
4. BEDDING: SUITABLE MATERIAL SHALL BE CLASS I, II OR III, PER MANUFACTURERS AND ODOT ITEM 611 REQUIREMENTS. THE CONTRACTOR SHALL PROVIDE DOCUMENTATION FOR MATERIAL SPECIFICATION TO ENGINEER. UNLESS OTHERWISE NOTED BY THE ENGINEER, MINIMUM BEDDING THICHNESS SHALL BE 4" FOR 4"-24"; 6" FOR 30"-60".
5. INITIAL BACKFILL: SUITABLE MATERIAL SHALL BE CLASS I, II OR III IN THE PIPE ZONE EXTENDING NOT LESS THAN 6" ABOVE CROWN PIPE. THE CONTRACTOR SHALL PROVIDE DOCUMENTATION FOR MATERIAL SPECIFICATION TO ENGINEER. MATERIAL SHALL BE INSTALLED AS REQUIRED IN ASTM D2321, LATEST EDITION.
6. MINIMUM COVER: MINIMUM COVER, H, IN NON-TRAFFIC APPLICATIONS (GRASS OR LANDSCAPE AREAS) IS 12" FROM THE TOP OF PIPE TO THE GROUND SURFACE. ADDITIONAL COVER MAY BE REQUIRED TO PREVENT FLOATION. FOR TRAFFIC APPLICATIONS, MINIMUM COVER, H, 12" UP TO 48" DIAMETER PIPE AND 24" OF COVER FOR 54" TO 60" DIAMETER PIPE, MEASURED FROM TOP OF PIPE TO PIPE TO BOTTOM OF FLEXIBLE PAVEMENT OR TO TOP OF RIDGE PAVEMENT.

TRENCHING DETAIL FOR PIPE

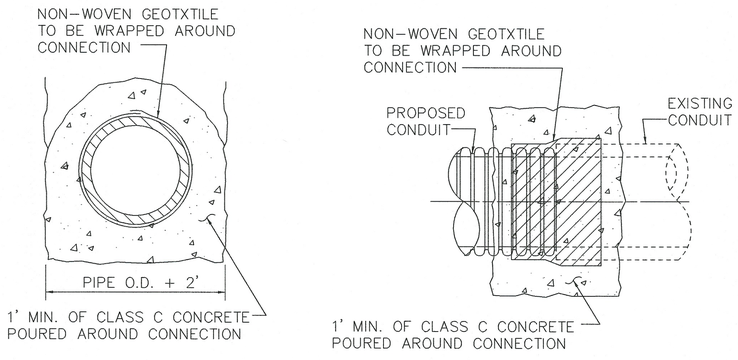

CONCRETE COLLAR

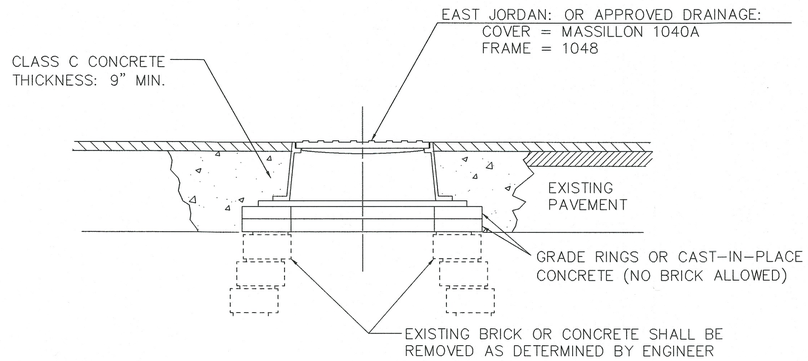

NOTES:

1. ALL CASTINGS, LIDS AND GRATES ARE TO BE CAREFULLY REMOVED AND STORED BY THE CONTRACTOR FOR SALVAGE BY THE CITY OF MASSILLON.
2. WORK SHALL INCLUDED ALL REMOVAL AND DISPOSAL OF EXISTING.

ITEM 604 DRAINAGE MANHOLE MASS1048-R

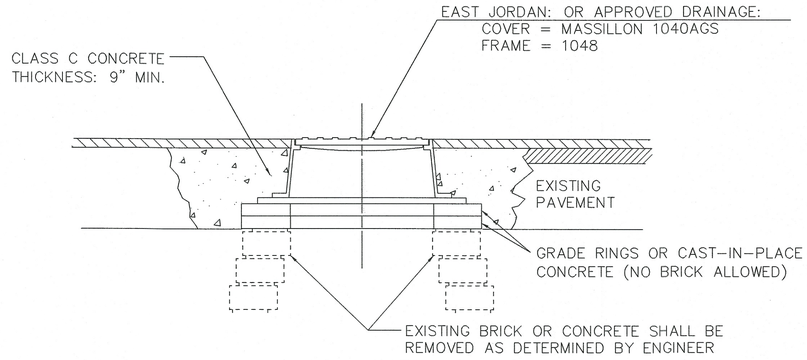

NOTES:

1. ALL CASTINGS, LIDS AND GRATES ARE TO BE CAREFULLY REMOVED AND STORED BY THE CONTRACTOR FOR SALVAGE BY THE CITY OF MASSILLON.
2. WORK SHALL INCLUDED ALL REMOVAL AND DISPOSAL OF EXISTING.

ITEM 604 SANITARY MANHOLE MASS1048-R

NW NE SW SE N

VERTICAL IN FEET 200 100 0

HORIZONTAL SCALE IN FEET 200 100 0

CHECKED BY: KAD
DATE: July, 2018
DRAWN BY: BMH
DATE: July, 2018

REVISIONS:

DESCRIPTION	DATE

Massillon Standard Construction Details
Miscellaneous Details
City of Massillon
Stark County, Ohio

CIVPRO ENGINEERING
ENGINEERS–SURVEYORS–CONSTRUCTION MANAGERS
4450 BELDEN VILLAGE STREET NW, SUITE 800 CANTON, OH 44718
PHONE: (330) 268–3734 EMAIL: KAD@CIVPROENGINEERING.COM
WWW.CIVPROENGINEERING.COM

DRAWING NAME: MassillonStd5
REF NUMBER:

Westbrook Estates Phase 5

STORM WATER POLLUTION PREVENTION PLAN

CITY OF MASSILLON

Stark County, Ohio



LOCATION MAP

INDEX OF SHEETS SWP3:

TITLE SHEET 35
GENERAL NOTES & IMPLEMENTATION SCHEDULE . . 36
SWPP SITE PLAN 37
SWPPP NOTES/DETAILS 38-40

CONSTRUCTION DATES

START DATE: SEPTEMBER 2018
COMPLETION DATE: JUNE 2019

GENERAL NOTES:

FOR REVISIONS/AMENDMENTS TO THE SWP3, CONTACT KEITH A. DYLEWSKI AT CIVPRO ENGINEERING, LLC AT (234) 410-3913.

A LOG DOCUMENTING GRADING AND STABILIZATION ACTIVITIES AS WELL AS AMENDEMENTS TO THIS SWP3 SHALL BE MAINTAINED WITH THESE PLANS

A PRE-CONSTRUCTION MEETING IS REQUIRED BETWEEN THE DEVELOPER, CONTRACTOR, CITY OF MASSILLON, AND STARK COUNTY SOIL AND WATER PRIOR TO THE BEGINNING OF ANY CONSTRUCTION ACTIVITY ON SITE. CONTACT PARTIES AT LEAST SEVEN DAYS BEFORE COMMENCING ANY LAND DISTURBING ACTIVITY.

OFFSITE BORROW ARES:

IF OFFSITE BORROW AREA IS REQUIRED. CONTRACTOR SHALL OBTAIN ALL APPLICABLE LOCAL AND STATE PERMITS. LOCATION SHALL BE COVERED BY NOI AND APPROVED SWPPP.

SWP3 STATEMENT:

THIS SWP3 PLAN WAS DEVELOPED TO CONTROL EROSION AND SEDIMENT PRIOR TO EXITING THE SITE. SEDIMENT WILL BE CONTROLLED WITH THE SHOWN BMP'S. SILT FENCE SHOULD BE PLACED AT THE BOTTOM OF THE SLOPES. SEE THE IMPLEMENTATION SCHEDULE & SEQUENCE OF MAJOR CONSTRUCTION OPERATIONS ON SHEET XX. THE SCHEDULE SHOULD BE FOLLOWED TO MAINTAIN PROPER CONTROL OF EROSION AND SEDIMENT ON SITE. ALL DISTURBED AREAS WHERE CONSTRUCTION WILL CEASE FOR MORE THAN 14 DAYS MUST BE STABILIZED. SEEDING AND MULCHING SHOULD BE CONSISTENT WITH THE SOIL STABILIZATION REQUIREMENTS SECTION LOCATED ON SHEET 36. SLOPES 3:1 OR GREATER REQUIRE EROSION CONTROL MATTING TO BE INSTALLED TO CONTROL EROSION. A LOG OF GRADING AND STABILIZATION ACTIVITIES AND SITE INSPECTION NEEDS TO RE KEPT. INSPECTIONS SHALL BE PERFORMED AT LEAST ONCE A WEEK AND WITHIN 24 HOURS AFTER A STORM EVENT GREATER THAN ½ INCH OF RAINFALL WITHHIN A 24-HOUR DURATION. ALL MEASURES SHALL BE OBSERVED TO ENSURE CORRECT OPERATION; REPAIRS TO ANY DAMAGED DEVICE/STRUCTURE SHALL BE COMPLETED WITHIN 3 DAYS OF THE INSPECTION.

KAD

DESIGN ENGINEER - KEITH A. DYLEWSKI, P.E., P.S. — DATE 7-1-18

STATE OF OHIO · KEITH A. DYLEWSKI · E-70907 · REGISTERED PROFESSIONAL ENGINEER

LONG-TERM MAINTENANCE OF STRUCTURAL POST- CONSTRUCTION CONTROLS SHALL BE THE RESPONSIBIITY OF THE OWNER.

OWNER — DATE

THE SITE CONTRACTOR SHALL BE RESPONSIBLE FOR IMPLEMENTATION & MAINTENANCE OF SEDIMENT CONTROL & BMP MEASURES DURING THE SEQUENCE OF CONSTRUCTION.

SITE CONTRACTOR — DATE

THE BUILDING CONTRACTOR SHALL BE RESPONSIBLE FOR IMPLEMENTATION & MAINTENANCE OF SEDIMENT CONTROL & BMP MEASURES ONCE ALL SITE WORK IS COMPLETED.

BUILDING CONTRACTOR — DATE

CIVPRO ENGINEERING

PLAN PREPARED BY:
CIVPRO ENGINEERING, LLC
4450 Belden Village Street NW, Suite 800
Canton, Ohio 44718
(234) 410-3913

OWNER:
Lockhart Development Company
800 W Waterloo Rd
Akron, Ohio 44314
(330) 745-6520

UNDERGROUND UTILITIES

CONTACT BOTH SERVICES TWO WORKING DAYS BEFORE YOU DIG

OHIO UTILITIES PROTECTION SERVICE — *Call Before You Dig* 1-800-362-2764

(Non-members must be called directly)

OIL & GAS PRODUCERS UNDERGROUND PROTECTION SERVICE 1-800-925-0988

NW NE SW SE

VERTICAL IN FEET: 0 50 100

HORIZONTAL SCALE IN FEET: 0 50 100

CHECKED BY: KAD
DATE: July, 2018
DRAWN BY: BMH
DATE: July, 2018

REVISIONS: DESCRIPTION | DATE

Westbrook Estates Phase 5
SWP3 Title Sheet
City of Massillon
Stark County, Ohio

CIVPRO ENGINEERING
ENGINEERS · SURVEYORS · CONSTRUCTION MANAGERS
4450 BELDEN VILLAGE STREET NW, SUITE 800 CANTON, OH 44718
PHONE: (330) 268-3724 EMAIL: KJONDO@CIVPROENGINEERING.COM
WWW.CIVPROENGINEERING.COM

DRAWING NAME: Westbrook Ph5
REF NUMBER:

SEDIMENT POLLUTANT CONTROLS (GENERAL NOTES):

1. PERIMETER SEDIMENT CONTROLS (I.E. SEDIMENT TRAPS, SILT FENCE, COMPOST SOCKS, COMPOST BERMS, ETC ...) SHALL BE IMPLEMENTED AS THE FIRST STEP OF GRADING AND WITHIN SEVEN DAYS FROM THE START OF GRUBBING AND SHALL CONTINUE TO FUNCTION UNTIL UPSLOPE AREAS DRAINING TO THEM ARE PERMANENTLY STABILIZED, OR AS DIRECTED BY THE CITY ENGINEER, OR DESIGNATED REPRESENTATIVE.

2. NO EROSION AND SEDIMENT CONTROL BMP 'S SHALL BE REMOVED FROM THE SITE PRIOR TO ADEQUATE PERMANENT STABILIZATION OF THE ASSOCIATED UPLAND DRAINAGE AREAS AND WITHOUT FIRST OBTAINING AUTHORIZATION FROM THE CITY ENGINEER, OR HIS DESIGNATED REPRESENTATIVE, UNLESS THEIR REMOVAL IS SPECIFICALLY PROVIDED FOR WITHIN THE SITE'S APPROVED PLAN.

3. THERE SHALL BE NO SEDIMENT-LADEN OR TURBID DISCHARGES TO WATER RESOURCES OR WETLANDS RESULTING FROM DEWATERING ACTIVITIES. IF TRENCH OR GROUNDWATER CONTAINS SEDIMENT, IT MUST PASS THROUGH A SEDIMENT TRAP OR OTHER EQUALLY EFFECTIVE SEDIMENT CONTROL DEVICE, PRIOR TO BEING DISCHARGED FROM THE CONSTRUCTION SITE. ALTERNATIVELY, SEDIMENT MAY BE REMOVED BY SETTLING IN PLACE OR BY DEWATERING INTO A SUMP PIT, FILTER BAG OR COMPARABLE PRACTICE. GROUND WATER DEWATERING WHICH DOES NOT CONTAIN SEDIMENT OR OTHER POLLUTANTS IS NOT REQUIRED TO BE TREATED PRIOR TO DISCHARGE. HOWEVER, CARE MUST BE TAKEN WHEN DISCHARGING GROUND WATER TO ENSURE THAT IT DOES NOT BECOME POLLUTANT-LADEN BY TRAVERSING OVER DISTURBED SOILS OR OTHER POLLUTANT SOURCES.

4. STREETS DIRECTLY ADJACENT TO CONSTRUCTION ENTRANCES AND RECEIVING TRAFFIC FROM THE DEVELOPMENT AREA, SHALL BE CLEANED DAILY TO REMOVE SEDIMENT TRACKED OFF-SITE. IF APPLICABLE, THE CATCH BASINS ON THESE STREETS NEAREST TO THE CONSTRUCTION ENTRANCES SHALL ALSO BE CLEANED WEEKLY. BASED ON SITE CONDITIONS, THE CITY ENGINEER, OR HIS DESIGNATED REPRESENTATIVE. MAY REQUIRE ADDITIONAL BEST MANAGEMENT PRACTICES TO CONTROL OFF-SITE TRACKING OF DUST.

5. IT SHALL BE THE RESPONSIBILITY OF THE DEVELOPER, OR REPRESENTATIVE, TO PROVIDE INSPECTION OF ALL CONTROLS ON THE SITE AT LEAST ONCE EVERY SEVEN CALENDAR DAYS, AND WITHIN 24 HOURS AFTER ANY STORM EVENT GREATER THAN ONE-HALF INCH OF RAIN PER 24 HOUR PERIOD. INSPECTIONS MUST BE COMPLETED BY A QUALIFIED INDIVIDUAL. WHEN INSPECTIONS REVEAL THE NEED FOR REPAIR, REPLACEMENT, OR INSTALLATION OF EROSION AND SEDIMENT CONTROL BMP'S, EMAIL WEEKLY REPORTS TO BORCHERDS@CVELIMITED.COM. THE FOLLOWING PROCEDURES SHALL BE FOLLOWED:
   A. WHEN PRACTICES REQUIRE REPAIR OR MAINTENANCE: THE BMP SHALL BE REPAIRED WITHIN 3 DAYS OF INSPECTION. EXCEPTION: SEDIMENT PONDS SHALL BE REPAIRED OR MAINTAINED WITH 10 DAYS OF INSPECTION.
   B. WHEN PRACTICES FAIL TO PROVIDE THEIR INTENDED FUNCTION: A MORE APPROPRIATE BMP SHALL BE SELECTED AND IMPLEMENTED WITHIN 10 DAYS OF THE INSPECTION.
   C. WHEN PRACTICES DEPICTED IN THE SWP3 ARE NOT INSTALLED: THE BMP SHALL BE INSTALLED WITHIN 10 DAYS OF THE INSPECTION. IF THE INSPECTION REVEALS THAT THE BMP IS NOT NECESSARY, THE RECORD MUST CONTAIN AN EXPLANATION FOR THE DECISION.

6. THE APPLICANT SHALL MAINTAIN FOR 3 YEARS FOLLOWING FINAL STABILIZATION, THE RESULTS OF THESE INSPECTIONS, THE NAMES AND QUALIFICATIONS OF PERSONNEL MAKING THE INSPECTIONS, THE DATES OF INSPECTIONS, MAJOR OBSERVATIONS RELATING TO THE IMPLEMENTATION OF THE SWP3, A CERTIFICATION AS TO WHETHER THE FACILITY IS IN COMPLIANCE WITH THE SWP3, AND INFORMATION ON ANY INCIDENTS OF NON-COMPLIANCE DETERMINED BY THESE INSPECTIONS.

7. ALL EROSION AND SEDIMENT CONTROL PRACTICES SPECIFIED ON THIS PLAN SHALL CONFORM WITH THE DETAILS AND SPECIFICATIONS OUTLINED IN THE CURRENT VERSION OF THE OHIO DEPARTMENT OF NATURAL RESOURCES, "RAINWATER AND LAND DEVELOPMENT" MANUAL, OR AS SPECIFIED BY THE CITY ENGINEER, OR DESIGNATED REPRESENTATIVE.

8. EROSION AND SEDIMENT CONTROL PRACTICES NOT ALREADY SPECIFIED ON THIS PLAN MAY BE NECESSARY DUE TO UNFORESEEN ENVIRONMENTAL CONDITIONS AND /OR CHANGES IN DRAINAGE PATTERNS CAUSED BY EARTH-MOVING ACTIVITY. ADDITIONAL PRACTICES SHALL BE IMPLEMENTED AT THE DEVELOPER'S EXPENSE AS DIRECTED BY THE CITY ENGINEER, OR DESIGNATED REPRESENTATIVE.

9. NO STRUCTURAL SEDIMENT CONTROLS (SILT FENCE. SEDIMENT TRAPS. ETC.) SHALL BE USED IN A WA ER RESOURCE OR WE LAND, UNLESS THEIR USE IS SPECIFICALLY PROVIDED FOR WITHIN THE SITE'S APPROVED PLAN.

10. SOIL STOCK PILES, TOPSOIL OR OTHER WISE, SHALL BE SITUATED A WAY FROM STREETS, SWALES, OR OTHER WATERWAYS AND SHALL BE SEEDED AND /OR MULCHED IMMEDIATELY.

11. ON-SITE PERSONNEL SHALL TAKE ALL NECESSARY MEASURES TO COMPLY WITH APPLICABLE REGULATIONS REGARDING FUGITIVE DUST EMISSIONS, INCLUDING OBTAINING NECESSARY PERMITS FOR SUCH EMISSIONS. THE CITY ENGINEER, OR DESIGNATED REPRESENTATIVE, MAY REQUIRE DUST CONTROLS INCLUDING, BUT NOT LIMITED TO, THE USE OF WATER TRUCKS TO WET DISTURBED AREAS. TAPPING STOCKPILES, TEMPORARY STABILIZATION OF DISTURBED AREAS, AND REGULATION OF THE SPEED OF VEHICLES ON THE SITE.

1. ANY DISTURBED AREA NOT PAVED, SODDED, OR BUILT UPON SHALL HAVE A MINIMUM OF 80% UNIFORM VEGETATIVE COVER PRIOR TO FINAL INSPECTION AND, IN THE OPINION OF THE CITY ENGINEER OR DESIGNATED REPRESENTATIVE, WILL BE MATURE ENOUGH TO CONTROL EROSION SATISFACTORILY AND SURVIVE SEVERE WEATHER.

NON-SEDIMENT POLLUTANT CONTROLS (GENERAL NOTES):

1. ALL PERSONNEL WILL BE INSTRUCTED REGARDING THE CORRECT PROCEDURE FOR WASTE DISPOSAL. THE INDIVIDUAL WHO MANAGES THE DAY- TO- DAY SITE OPERATIONS WILL BE RESPONSIBLE FOR ENSURING ALL FORMS OF WASTE ARE PROPERLY DISPOSED OF.

2. NO CONTAMINATED SOILS ARE KNOWN TO EXIST ON SITE. CONTAMINATED SOILS DISCOVERED FROM REDEVELOPMENT SITES SHALL BE DISPOSED OF PROPERLY. RUNOFF FROM CONTAMINATED SOILS SHALL NOT BE DISCHARGED FROM THE SITE. PROPER PERMITS SHALL BE OBTAINED FOR DEVELOPMENT PROJECTS ON SOLID WASTE LANDFILL SITES OR REDEVELOPMENT SITES.

3. CONCRETE WASH WATER SHALL NOT BE ALLOWED TO FLOW TO STREAMS, DITCHES, STORM DRAINS, OR ANY OTHER WATER CONVEYANCE. A SUMP OR PIT WITH NO POTENTIAL FOR DISCHARGE SHALL BE CONSTRUCTED IF NEEDED TO CONTAIN CONCRETE WASH WATER. FIELD TILE OR OTHER SUBSURFACE DRAINAGE STRUCTURES WITHIN 10 FEET OF THE SUMP SHALL BE CUT AND PLUGGED. FOR SMALL PROJECTS, TRUCK CHUTES MAY BE RINSED AWAY FROM ANY WATER CONVEYANCES.

4. NO SOLID OR LIQUID WASTE SHALL BE DISCHARGED INTO STORM WATER RUNOFF. ANY AND ALL WASTE MATERIALS (SOLID, HAZARDOUS, CONSTRUCTION & DEMOLITION, SANITARY, TOXIC, CONTAMINATED SOILS, ETC.) GENERATED AT THE SITE SHALL BE PROPERLY DISPOSED OF IN ACCORDANCE WITH ALL APPLICABLE LOCAL, STATE, AND FEDERAL RULES/REGULATIONS. ON-SITE STORAGE CONTAINERS SHALL BE COVERED AND NOT LEAKING. IT IS PROHIBITED TO BURN, BUY OR POUR OUT ONTO THE GROUND OR INTO THE STORM SEWERS ANY SOLVENTS. PAINTS, GASOLINE, DIESEL FUEL. USED MOTOR OIL, HYDRAULIC FLUID, ANTIFREEZE, CEMENT CURING COMPOUNDS AND ANY OTHER SUCH TOXIC OR HAZARDOUS MATERIALS OR WASTES.

5. HANDLING CONSTRUCTION CHEMICALS. MIXING, PUMPING, TRANSFERRING OR OTHER HANDLING OF CONSTRUCTION CHEMICALS SUCH AS FERTILIZER , LIME, ASPHALT, CONCRETE DRYING COMPOUNDS, AND ALL OTHER POTENTIALLY HAZARDOUS MATERIALS SHALL BE PERFORMED IN AN ARE A AWAY FROM ANY WATER COURSE, DITCH OR STORM DRAIN.

6. EQUIPMENT FUELING AND MAINTENANCE, OIL CHANGING, ETC., SHALL BE PERFORMED A WAY FROM WATER COURSES, DITCHES OR STORM DRAINS, IN AN AREA DESIGNATED FOR THAT PURPOSE. THE DESIGNATED AREA SHALL BE EQUIPPED FOR RECYCLING OIL AND CATCHING SPILLS. SECONDARY CONTAINMENT WITH A MINIMUM CAPACITY EQUAL TO 110% OF THE VOLUME OF ALL CONTAINERS IN A STORAGE ARE A SHALL BE PROVIDED FOR ALL FUEL/LIQUID STORAGE TANKS AND DRUMS.

7. ALL SANITARY WASTE SHALL BE COLLECTED FROM PORTABLE UNITS A MINIMUM OF THREE TIMES PER WEEK BY A LICENSED SANITARY WASTE MANAGEMENT CONTRACTOR, AS REQUIRED BY LOCAL REGULATION.

8. THE FOLLOWING GOOD HOUSEKEEPING PRACTICES WILL BE FOLLOWED ON SITE DURING THE CONSTRUCTION PROJECT:
   A. AN EFFORT WILL BE MADE TO STORE ONLY ENOUGH PRODUCT REQUIRED TO DO THE JOB.
   B. ALL MATERIALS STORED ON SITE WILL BE STORED IN A NEAT, ORDERLY MANNER , IN THEIR APPROPRIATE CONTAINERS, AND, IF POSSIBLE, UNDER A ROOF OR OTHER ENCLOSURE.
   C. PRODUCTS WILL BE KEPT IN THEIR ORIGINAL CONTAINERS WITH THE MANUFACTURER' S LABEL. SUBSTANCES WILL NOT BE MIXED WI TH ONE ANOTHER UNLESS RECOMMENDED BY THE MANUFACTURER.
   D. WHENEVER POSSIBLE, ALL OF A PRODUCT WILL BE USED UP BEFORE DISPOSING OF THE CONTAINER.
   E. THE MANUFACTURER'S RECOMMENDATIONS FOR PROPER USE AND DISPOSAL WILL BE FOLLOWED.
   F. THE SITE SUPERINTENDENT WILL INSPECT DAILY TO ENSURE PROPER USE AND DISPOSAL OF MATERIALS ON SITE.

9. IN ADDITION TO PREVIOUS NOTES, THE FOLLOWING PRACTICES WILL BE FOLLOWED FOR SPILL PREVENTION AND CLEAN -UP:
   A. MANUFACTURER' S RECOMMENDED METHODS FOR SPILL CLEAN-UP WILL BE POSTED A NO SITE PERSONNEL MADE AWARE OF THE PROCEDURES AND THE LOCATION OF THE INFORMATION AND CLEAN-UP SUPPLIES.
   B. MATERIALS AND EQUIPMENT NECESSARY FOR SPELL CLEANUP WILL BE KEPT IN THE MATERIAL STORAGE AREA ON SITE. EQUIPMENT AND MATERIALS WILL INCLUDE, BUT NOT LIMITED TO: BROOMS, DUSTPANS, MOPS, RAGS, GLOVES, GOFFLES, CAT LITTER, SAND, SAWDUST, AND PLASTIC AND METAL TRASH CONTAINERS SPECIFICALLY DESIGNATED FOR THIS PURPOSE.
   C. ALL SPILLS WILL BE CLEANED UP IMMEDIATELY AFTER DISCOVERY.
   D. THE SPILL AREA WILL BE KEPT WELL-VENTILATED AND PERSONNEL WILL WEAR APPROPRIATE PROTECTIVE CLOTHING TO PREVENT INJURY FROM CONTACT WITH A HAZARDOUS SUBSTANCE.
   E. SPILLS OF TOXIC OR HAZARDOUS MATERIALS WILL BE REPORTED TO THE APPROPRIATE STATE OR LOCAL GOVERNMENT AGENCY, REGARDLESS OF SIZE.
   F. THE SPILL PREVENTION PLAN WILL BE ADJUSTED TO INCLUDE MEASURES TO PREVENT THIS TYPE OF SPILL FROM REOCCURRING A ND HOW TO CLEANUP THE SPILL IF THERE IS ANOTHER ONE. A DESCRIPTION OF THE SPILL, WHAT CAUSED IT, AND THE CLEANUP MEASURES WILL ALSO BE INCLUDED.
   G. THE SITE SUPERINTENDENT RESPONSIBLE FOR THE DAY-TO-DA Y OPERATIONS WILL BE THE SPILL PREVENT ON AND CLEANUP COORDINATOR. THEY WILL DESIGNATE SITE PERSONNEL WHO WILL RECEIVE SPILL PREVENTION AND CLEANUP TRAINING. THESE INDIVIDUALS WILL EACH BECOME RESPONSIBLE FOR A PARTICULAR PHASE OF PREVENTION AND CLEANUP. THE NAMES OF RESPONSIBLE SPILL PERSONNEL WILL BE POSTED IN THE MATERIAL STORAGE AREA AND IN THE OFFICE TRAILER ON SITE.

CITY OF MASSILLON CONSTRUCTION STANDARDS AND SPECIFICATIONS:

GENERAL

CONTRACTOR SHALL MEET THE EROSION AND SEDIMENT CONTROL REQUIREMENTS OF THE OHIO ENVIRONMENTAL PROTECTION AGENCY, DEPARTMENT OF TRANSPORTATION AND THE SOIL CONSERVATION SPECIFICATIONS. REQUIRED NPDES STORM WATER PERMITS SHALL APPLY.

IN CASES WHERE CONFLICTS EXIST BETWEEN STANDARDS, THE STRICTER REQUIREMENTS SHALL GOVERN.

PROPOSED TEMPORARY EROSION AND SEDIMENT CONTROL MEASURES SHALL BE APPROVED BY THE CITY ENGINEER.

CONSTRUCTION ENTRANCE

THE CONSTRUCTION ENTRANCE SHALL BE AS LONG AS REQUIRED TO STABILIZE HIGH TRAFFIC AREAS BUT NOT LESS THAT 70 FT.

MATERIAL USED SHALL BE #1 & #2 LIMESTONE AGGREGATE TWO INCH STONE. MINIMUM WIDTH OF 14 FT. AND DEPTH OF 8".

A CULVERT PIPE SHALL BE PLACED UNDER THE ENTRANCE I F NEEDED TO PREVENT SURFACE WATER FLOW ACROSS THE ENTRANCE AND ONTO THE PAVED ROADWAY, PER CITY STANDARDS.

CONSTRUCTION ENTRANCES SHALL NOT BE RELIED UPON TO REMOVE MUD FROM VEHICLES AND PREVENT OFF -SITE TRACKING, THEREFORE MUD TRACKED ON TO PUBLIC ROADS SHALL BE REMOVED IMMEDIATELY BY SCRAPING OR SWEEPING.

PAVED DETENTION FACILITY

DETENTION FACILITIES WHICH ARE TO REMAIN PERMANENT SHALL BE DESIGNED TO INCLUDE CONCRETE PAVED GUTTERS IN ACCORDANCE WITH THE ODOT STANDARD DRAWING FOR PAVED GUTTERS, DM Z.I.M. GUTTERS SHALL BE CONSTRUCTED OF CLASS C CONCRETE. THE PROPOSED DESIGN, GRADE AND LOCATION SHALL BE SUBMITTED TO THE CITY ENGINEER FOR HIS APPROVAL OR MODIFICATION.

SPECIFICATION FOR SEEDING (G-13)

1. A SUBSOILER, PLOW OR OTHER IMPLEMENT SHALL BE USED TO REDUCE SOIL COMPACTION AND ALLOW MAXIMUM INFILTRATION. MAXIMIZING INFILTRATION WILL HELP CONTROL BOTH RUNOFF R ATE AND WATER QUALITY.) SUBSOILING SHOULD BE DONE WHEN THE SOIL MOISTURE IS LOW ENOUGH TO ALLOW THE SOIL TO CRACK OR FRACTURE. SUBSOILING SHA LL NOT BE DONE ON SLIP-PRONE AREAS WHERE SOIL PREPARATION SHOULD BE LIMITED TO WHAT IS NECESSARY FOR ESTABLISHING VEGETATION.

2. THE SITE SHALL BE GRADED AS NEEDED TO PERMIT THE USE OF CONVENTIONAL EQUIPMENT FOR SEEDBED PREPARATION AND SEEDING.

3. RESOIL SHALL BE APPLIED WHERE NEEDED TO ESTABLISH VEGETATION.

SEEDEBED PREPARATION:

1. LIME -- AGRICULTURAL GROUND LIMESTONE SHALL BE APPLIED TO ACID SOIL AS RECOMMEND BY A SOIL TEST. IN LIEU OF A SOIL TEST, LIME SHALL BE APPLIED AT A RATE OF 100 LB./1,000 SQ.FT. OR 2 TONS/ AC.

2. FERTILIZER -- FERTILIZER SHALL BE APPLIED AS RECOMMENDED BY A SOIL TEST. IN LIEU OF A SOIL TEST, FERTILIZER SHALL BE APPLIED AT A RATE OF 12 LB./1,000 SQ. FT. OR 500. LB./AC. OF 10-10-10 OR 12-12-12 ANALYSIS.

3. THE LIME AND FERTILIZER SHALL BE WORKED INTO THE SOIL WITH A DISK HARROW, SPRING-TOOTH HARROW, OR OTHER SUITABLE FIELD IMPLEMENT TO A DEPTH OF 3 IN. ON SLOPING LAND, THE SOIL SHOULD SHALL BE WORKED ON THE CONTOUR.

4. SEEDING SHOULD BE DONE MARCH 1 TO MAY 31 OR AUGUST 1 TO SEPTEMBER 30 THESE SEEDING DATES ARE IDEAL BU T, WITH THE USE OF ADDITIONAL MULCH AND IRRIGATION, SEEDINGS M AY BE MADE ANY TIME THROUGHOUT THE GROWING SEASON. TILLAGE/SEEDBED PREPARATION SHOULD BE DONE WHEN THE SOIL IS DRY ENOUGH TO CRUMBLE AND NO T FORM RIBBONS WHEN COMPRESSED BY HAND. FOR WINTER SEEDING, SEE THE FOLLOWING SECTION OF DORMANT SEEDING.

DORMANT SEEDINGS

1. SEEDING SHALL NOT BE PLANTED FROM OCTOBER 1 THROUGH NOVEMBER 20 DURING THIS PERIOD THE SEEDS ARE LIKELY TO GERMINATE BUT PROBABLY WILL NOT BE ABLE TO SURVIVE THE WINTER.

2. THE FOLLOWING METHODS M AY BE USED FOR "DORMANT SEEDING"

   • FROM OCTOBER 1 THROUGH NOVEMBER 20, PREPARE THE SEEDBED, ADD THE REQUIRED A MOUNTS OF LIME AND FERTILIZER, THEN MULCH AND ANCHOR. AFTER NOVEMBER 20, AND BEFORE MARCH 15, BROADCAST THE ELECTED SEED MIXTURE. INCREASE THE SEEDING RATES BY 50% FOR THIS TYPE OF SEEDING.

   • FROM NOVEMBER 20, THROUGH MARCH 15, WHEN SOIL CONDITIONS PER MIX, PREPARE THE SEEDBED. LIME AND FERTILIZE. APPLY THE SELECTED SEED MIXTURE, MULCH AND ANCHOR. INCREASE THE SEEDING RATES BY 50% FOR THIS TYPE OF SEEDING.

   • APPLY SEEDING UNIFORMLY WITH A CYCLONE SEEDER, DRILL, CULTIPACKER SEEDER, OR HYDRO-SEEDER (SLURRY MAY INCLUDE SEED AND FERTILIZER) ON A FIRM, MOIST SEEDBED.

   • WHERE FEASIBLE, EXCEPT WHEN A CULTIPACKER TYPE SEEDER IS USED, THE SEEDBED SHOULD BE FIRMED FOLLOWING SEEDING OPERATIONS WITH A CULTIPACKER, ROLLER, OR LIGHT DRAG. ON SLOPING LAND, SEEDING OPERATIONS SHOULD BE ON THE CONTOUR WHERE FEASIBLE

MULCHING

1. MULCH MATERIAL SHALL BE APPLIED IMMEDIATELY AFTER SEEDING. SEEDINGS MADE DURING OPTIMUM SEEDING DATES AND WITH FAVORABLE SOIL CONDITIONS AND ON VERY FLAT AREAS MAY NOT NEED MULCH TO ACHIEVE ADEQUATE STABILIZATION. DORMANT SEEDING SHALL BE MULCHED.

2. MATERIALS

   • STRAW - - IF STRAW IS USED IT SHALL BE UNROTTED SMALL-GRAIN STRAW APP LIED AT THE RATE OF 2 TONS/ AC. OR 90 LB./1,000 SQ. FT. (TWO TO THREE BALES). THE MULCH SHALL BE SPREAD UNIFORMLY BY HAND OR MECHANICALLY SO THE SOIL SURFACE IS COVERED. FOR UNIFORM DISTRIBUTION OF HAND-SPREAD MULCH, DIVIDE ARE A INTO APPROXIMATELY 1,000-SQ. -FT. SECTIONS AND SPREAD TWO 45- LB. BALES OF STRAW IN EACH SECTION.

   • HYDROSEEDERS - - IF WOOD CELLULOSE FIBER IS USED, IT SHALL BE USED A T 2,000 LB./AC/ OR 46 LB./1,000 SQ.FT.

   • OTHER -- OTHER ACCEPTABLE MULCHES INCLUDE MULCH MATTINGS APPLIED ACCORDING TO MANUFACTURER'S RECOMMENDATIONS OR WOOD CHIPS APPLIED AT 6 TONS/A C.

3. STRAW MULCH ANCHORING METHODS

STRAW MULCH SHALL BE ANCHORED IMMEDIATELY TO MINIMIZE LOSS BY WIND OR WATER.

• MECHANICAL -- A DISK, CRIMPER, OR SIMILAR TYPE TOOL SHALL BE SET STRAIGHT TO PINCH OR ANCHOR THE MULCH MATERIAL INTO THE SOIL. STRAW MECHANICALLY ANCHORED SHALL NOT BE FINELY CHOPPED, BUT GENERALLY, BE LEFT LONGER THAN 6 IN.

• MULCH NETTINGS -- NETTINGS SHALL BE USED ACCORDING TO THE MANUFACTURER 'S RECOMMENDATIONS. NETTING MAY BE NECESSARY TO HOLD MULCH IN PLACE IN AREAS OF CONCENTRATED RUNOFF AND ON CRITICAL SLOPES.

• ASPHALT EMULSION -- ASPHALT SHALL BE APPLIED AS RECOMMENDED BY THE MANUFACTURER OR AT A RATE OF 160 CAL. / AC.

• SYNTHETIC BINDERS -- SYNTHETIC BINDER S SUCH AS ACRYLIC DLRACRI-TAC), DCA-70, PETROSET, TERRA TACK OR EQUAL MAY BE USED AT RATES RECOMMENDED BY THE MANUFACTURER.

• WOOD CELLULOSE FIBER -- WOOD CELULOSE FIBER BINDER SHALL BE APPLIED AT A NET DRY WEIGHT OF 750 LB./AC. THE WOOD CELLULOSE FIBER SHALL BE MIXED WITH WATER AND THE MIXTURE SHALL CONTAIN A MAXIMUM OF 50 L B./100 GAL. OR WOOD CELLULOSE FIBER.

IRRIGATION

1. PERMANENT SEEDING SHALL INCLUDE IRRIGATION TO ESTABLISH VEGETATION DURING DRY OR HOT WEATHER OR ON ADVERSE SITE CONDITIONS AS NEEDED FOR ADEQUATE MOISTURE FOR SEED GERMINATION AND PLANT GROWTH.

2. EXCESSIVE IRRIGATION RATES SHALL BE AVOIDED AND IRRIGATION MONITORED TO PREVENT EROSION AND DAMAGE FROM RUNOFF.

SEED MIX

1. SEED MIX SHALL BE PER ODOT 559.09 OR AS APPROVED BY THE CITY SERVICE DEPT.

IMPLEMENTATION SCHEDULE & SEQUENCE OF MAJOR CONSTRUCTION OPERATIONS:

A. BEFORE ANY GRADING ACTIVITIES BEGIN:
1. INSTALL PROTECTION FENCING AROUND WETLAND AREA TO REMAIN UNDISTURBED. FENCING TO BE MAINTAINED THROUGHOUT THE ENTIRE CONSTRUCTION PROCESS.
2. CONSTRUCT CONSTRUCTION FENCE AS NECESSARY TO ENCLOSE SITE
3. INSTALL SILT FENCING PER DETAIL
4. CONSTRUCT STABILIZED CONSTRUCTION ENTRANCE

B. CLEARING A ND GRUBBING·
1. INSTALL REMAINING SILT FENCE, PER PLAN REQUIREMENTS
2. CLEAR AND GRUB THE BASIN/WATER QUALITY BASIN ARE A
3. CONSTRUCT BASIN /WATER QUALITY POND PER PLAN WITH OUTLET STRUCTURE, EMERGENCY SPILLWAY, AND ASSOCIATED PIPING
4. CONSTRUCT EAST AND WESTERN DRAINAGE SWALES, FOREBAY, AND CHECK DAMS
5. CLEAR AND GRUB REMAINING AREAS DESIGNATED ON THE PLAN
6. CONSTRUCT CONCRETE WASHOUT AREA, VEHICLE FUELING AREA, CONSTRUCTION DUMPSTER AREA, AND SOLID, S ANI TAR Y, AND TOXIC WASTE AREA

C. STRIPPING AND STOCKPILING OF TOPSOIL
1. STRIPING TOPSOIL WHERE APPLICABLE AND PLACE IN DESIGNATED STOCKPILE AREA
2. CONSTRUCT FILTER BERM AROUND STOCKPILE
3. INSTALL SOIL STABILIZATION MEASURES AS NEEDED
4. DISTURBED AREAS WHERE CONSTRUCTION WILL CEASE FOR MORE THAN 14 DAYS WILL BE STABILIZED

D. MASS GRADING OPERATIONS:
1. BEGIN MASS GRADING OF SITE PER PLAN
2. INSTALL EROSION CONTROLS MEASURES (ROCK DAMS, EROSION CONTROL MATTING, ETC.), PER PLAN REQUIREMENTS AS NEEDED
3. DISTURBED AREAS WHERE CONSTRUCTION WILL CEASE FOR MORE THAN 14 DAYS WILL BE STABILIZED

E. UTILITY CONSTRUCTION:
1. CONSTRUCT SANITARY SERVICE AND WATERLINE, PER PLAN
2. CONSTRUCT STORM SEWER SYSTEM, INCLUDING HEADWALLS, CATCH BASINS, YARD DRAINS, AND ROCK CHANNEL PROTECTION, PER PLAN
3. INSTALL INLET PROTECTION
4. INSTALL SOIL STABILIZATION MEASURES AS NEEDED

F. PAVING OPERATIONS:
1. CONSTRUCT ASPHALT AND CONCRETE PAVING, SIDEWALK, CURB
2. CLEAN AND RESET ALL UTILITY STRUCTURES TO FINAL GRADE

G. BUILDING:
1. CONSTRUCTION OF BUILDING. MAINTAIN ALL BMPS.

H. FINAL GRADING OPERATIONS:
1. REMOVE SEDIMENT FROM POND AND DR AIN AGE STRUCTURES
2. REMOVE BMPs FROM STORM INLETS A ND FINALIZE PAVEMENT ACTIVITIES
3. REMOVE TEMPORARY CONCRETE WASHOUT AREA
4. REMOVE ALL TEMPORARY BMPs AND STABILIZE ANY AREAS DISTURBED BY THERE REMOVAL WITH EROSION CONTROLS
5. PREPARE FINAL SEEDING AND LANDSCAPING
6. REMOVE PROTECTION FENCING AROUND WETLAND AREA
7. BASIN MUST BE DREDGED OF ACCUMULATED SEDIMENT AND RESTORED TO ORIGINAL DESIGN CAPACITY

I. POST-GRADING OPERATIONS:
1. MONITOR PR OGRESS OF SITE STABILIZATION
2. RE-SEED AND REPAIR DAMAGED AREAS
3. MAINTAIN AND INSPECT ALL PERMANENT BMPs

DEWATERING:

1. THERE SHALL BE NO TURBID DISCHARGES TO SURFACE WATERS FROM DEWATERING ACTIVITIES.
2. CONTRACTOR SHALL PREPARE A DEWATERING PLAN PRIOR TO ANY PUMPING ACTIVITIES.
3. WATER FROM TRENCHES SHALL BE DISPOSED OF IN SUCH A MANNER TO AVOID PUBLIC NUISANCE, INJURY TO PUBLIC HEALTH OR ENVIRONMENT, DAMAGE TO PROPERTIES, OR DAMAGE TO WORK COMPLETED.

NW NE SW SE N

VERTICAL FEET 30 15 0

0 15 30 HORIZONTAL SCALE IN FEET

CHECKED BY: KAD
DATE: July, 2018
DRAWN BY: BMH
DATE: July, 2018

REVISIONS: DATE DESCRIPTION

Phase 5
Implementation Schedule
General Notes and
Westbrook Estates
City of Massillon
Stark County, Ohio

CIVPRO ENGINEERING
ENGINEERS-SURVEYORS-CONSTRUCTION MANAGERS
4450 BELDEN VILLAGE STREET NW, SUITE 800 CANTON, OH 44718
PHONE: (330) 268-3734 EMAIL: KAD@CIVPROENGINEERING.COM
WWW.CIVPROENGINEERING.COM

DRAWING NAME: xxxx.DWG
PROJECT NUMBER: xxxx.DWG

NOTES:

1. ALL EMBANKMENT UNDER PAVEMENT AND STRUCTURES SHALL BE COMPACTED WITH SELECT SITE MATERIAL PER ODOT SPECIFICATION 203.
2. CONTRACTOR SHALL STRIP ANY TOP SOIL AND STOCKPILE PRIOR TO SITE GRADING.
3. MEET ALL EXISTING GRADES FLUSH
4. ALL NEW GRADED AREAS SHALL BE GRADED TO ENSURE POSITIVE FLOW
5. TO THE NEAREST DRAINAGE STRUCTURE OR OVERLAND SWALE.
6. STORM WATER DETENTION/WATER QUALITY FOR THIS PHASE IS BEING ACCOMPLISHED BY THE EXISTING REGIONAL DETENTION BASINS CURRENTLY IN PLACE.
7. WATER QUALITY VOLUME:

   WQv = Rv * P * A/12

   WQv = (0.05+0.9*0.38) * (0.9) * (22.6617/12)

   WQv = 0.6135 ACRE-FEET

LEGEND:

650.0 / 649.5	TOP OF CURB ELEVATION / PAVEMENT ELEVATION
650.0	PROPOSED SPOT ELEVATION
	EXISTING MAJOR CONTOUR
	EXISTING MINOR CONTOUR
	PROPOSED MAJOR CONTOUR
	PROPOSED MINOR CONTOUR
	ADA ACCESSIBLE ROUTE
	FLOW ARROW
LP	LOW POINT
HP	HIGH POINT
	100 YEAR FLOOD ROUTE

LEGEND

CE	CONSTRUCTION ENTRANCE
PS	PERMANENT SEEDING
TS	TEMPORARY SEEDING
TSS	TOPSOIL STOCKPILE
IP	INLET PROTECTION
ESP	EXCAVATED DROP INLET SEDIMENT PROTECTION
VF	VEHICLE FUELING AREA
SA	STORAGE AREA (SOLID, SAN. WASTE.....)
CW	CONCRETE WASHOUT PITS
— x —	SILT FENCE
	PHASE I LIMITS OF CONSTRUCTION-22.6617 Acres

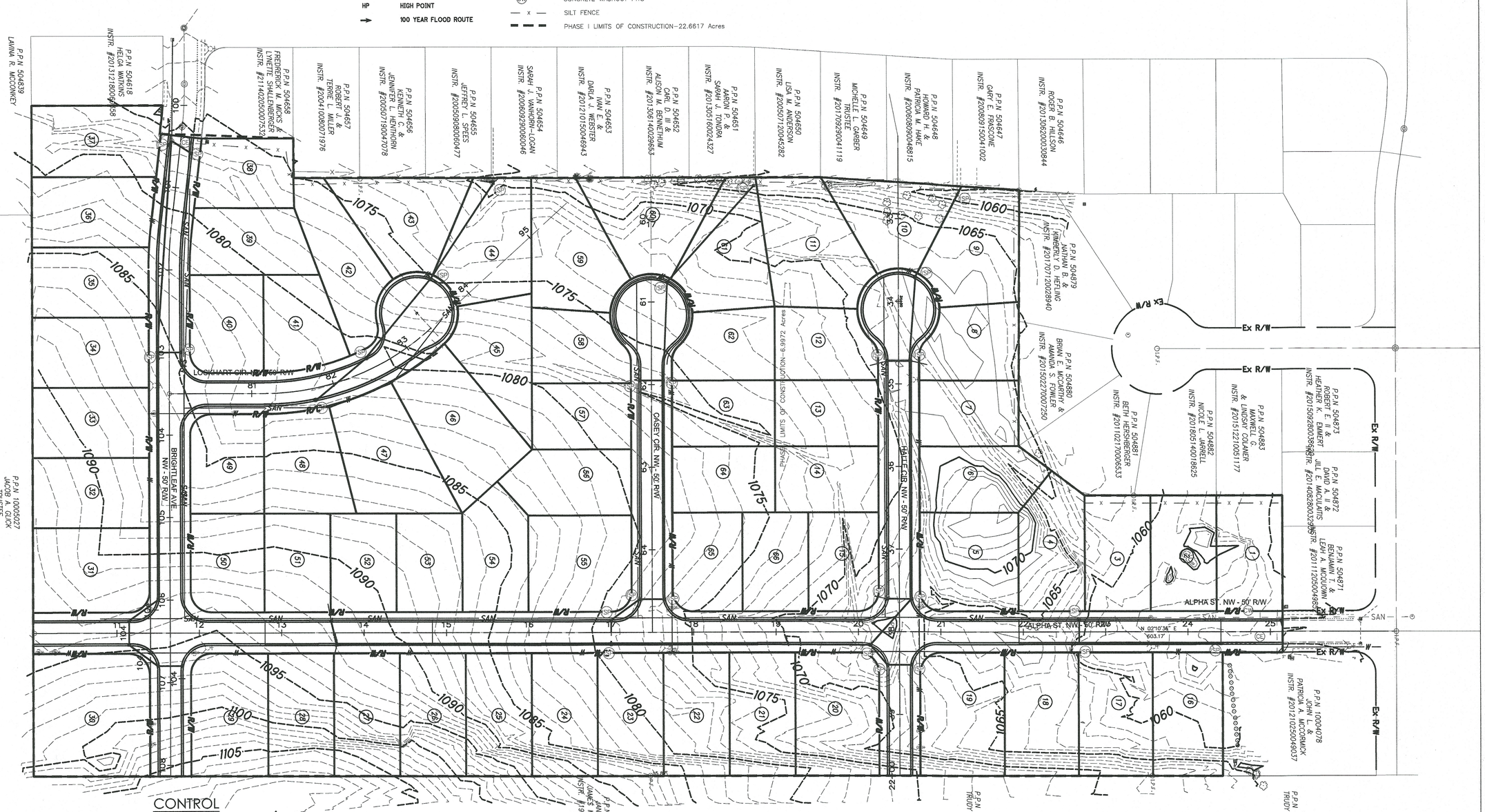

DESCRIPTION	NORTH	EAST	ELEVATION
CP #1 (IPF IN MONMENT BOX)	416514.8476	2219299.5185	xxxx
CP #2 (IPF IN MONUMENT BOX)	2416790.1967	2219653.6051	1070.18

CONTROL

N
VERTICAL IN FEET 0 2.5 5

0 30 60
HORIZONTAL SCALE IN FEET

CHECKED BY: KAD
DATE: July, 2018
DRAWN BY: BMH
DATE: July, 2018

REVISIONS: DESCRIPTION | DATE

Westbrook Estates Phase 5
SWP3 Plan
City of Massillon
Stark County, Ohio

CIVPRO ENGINEERING
ENGINEERS-SURVEYORS-CONSTRUCTION MANAGERS
4450 BELDEN VILLAGE STREET NW, SUITE 800, CANTON, OH 44718
PHONE: (330) 305-6677 FAX: (330) 305-6676
WWW.CIVPROENGINEERING.COM

DRAWING NAME: WB5 SWP3
REF NUMBER:

STABILIZED CONSTRUCTION ENTRANCE

STANDARD SYMBOL: SCE

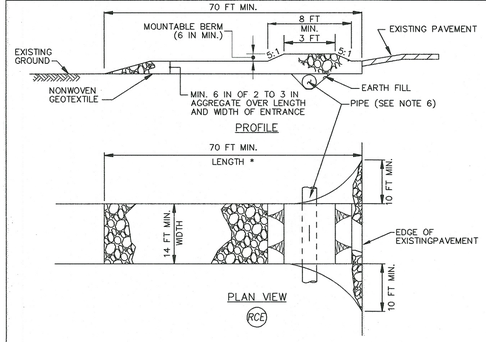

CONSTRUCTION SPECIFICATIONS

1. PLACE STABILIZED CONSTRUCTION ENTRANCE IN ACCORDANCE WITH THE APPROVED PLAN. VEHICLES MUST TRAVEL OVER THE ENTIRE LENGTH OF THE SCE. USE MINIMUM LENGTH OF 70 FEET (*50 FEET FOR SINGLE RESIDENCE LOT). USE MINIMUM WIDTH OF 10 FEET. FLARE SCE 14 FEET MINIMUM AT THE EXISTING ROAD TO PROVIDE A TURNING RADIUS.
2. PIPE ALL SURFACE WATER FLOWING TO OR DIVERTED TOWARD THE SCE UNDER THE ENTRANCE, MAINTAINING POSITIVE DRAINAGE. PROTECT PIPE INSTALLED THROUGH THE SCE WITH A MOUNTABLE BERM WITH 5:1 SLOPES AND A MINIMUM OF 12 INCHES OF STONE OVER THE PIPE. PROVIDE PIPE AS SPECIFIED ON APPROVED PLAN. WHEN THE SCE IS LOCATED AT A HIGH SPOT AND HAS NO DRAINAGE TO CONVEY, A PIPE IS NOT NECESSARY. A MOUNTABLE BERM IS REQUIRED WHEN SCE IS NOT LOCATED AT A HIGH SPOT.
3. PREPARE SUBGRADE AND PLACE NONWOVEN GEOTEXTILE, AS SPECIFIED IN SECTION H-1 MATERIALS.
4. PLACE CRUSHED AGGREGATE (2 TO 3 INCHES IN SIZE) OR EQUIVALENT RECYCLED CONCRETE (WITHOUT REBAR) AT LEAST 6 INCHES DEEP OVER THE LENGTH AND WIDTH OF THE SCE.
5. MAINTAIN ENTRANCE IN A CONDITION THAT MINIMIZES TRACKING OF SEDIMENT. ADD STONE OR MAKE OTHER REPAIRS AS CONDITIONS DEMAND TO MAINTAIN CLEAN SURFACE, MOUNTABLE BERM, AND SPECIFIED DIMENSIONS. IMMEDIATELY REMOVE STONE AND/OR SEDIMENT SPILLED, DROPPED, OR TRACKED ONTO ADJACENT ROADWAY BY VACUUMING, SCRAPING, AND/OR SWEEPING. WASHING ROADWAY TO REMOVE MUD TRACKED ONTO PAVEMENT IS NOT ACCEPTABLE UNLESS WASH WATER IS DIRECTED TO AN APPROVED SEDIMENT CONTROL PRACTICE.

SILT FENCE

STANDARD SYMBOL: SF

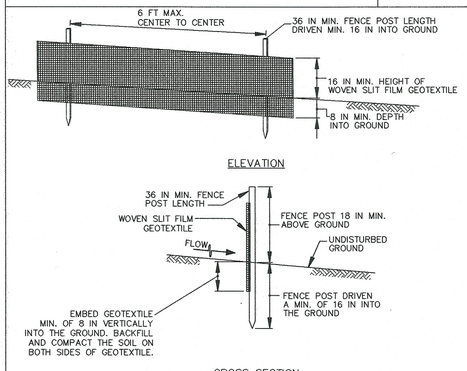

CONSTRUCTION SPECIFICATIONS

1. USE WOOD POSTS 1¾ X 1¾ ± 1/16 INCH (MINIMUM) SQUARE CUT OF SOUND QUALITY HARDWOOD. AS AN ALTERNATIVE TO WOODEN POST USE STANDARD "T" OR "U" SECTION STEEL POSTS WEIGHING NOT LESS THAN 1 POUND PER LINEAR FOOT.
2. USE 36 INCH MINIMUM POSTS DRIVEN 16 INCH MINIMUM INTO GROUND NO MORE THAN 6 FEET APART.
3. USE WOVEN SLIT FILM GEOTEXTILE AS SPECIFIED IN SECTION H-1 MATERIALS AND FASTEN GEOTEXTILE SECURELY TO UPSLOPE SIDE OF FENCE POSTS WITH WIRE TIES OR STAPLES AT TOP AND MID-SECTION.
4. PROVIDE MANUFACTURER CERTIFICATION TO THE AUTHORIZED REPRESENTATIVE OF THE INSPECTION/ENFORCEMENT AUTHORITY SHOWING THAT THE GEOTEXTILE USED MEETS THE REQUIREMENTS IN SECTION H-1 MATERIALS.
5. EMBED GEOTEXTILE A MINIMUM OF 8 INCHES VERTICALLY INTO THE GROUND. BACKFILL AND COMPACT THE SOIL ON BOTH SIDES OF FABRIC.
6. WHERE TWO SECTIONS OF GEOTEXTILE ADJOIN: OVERLAP, TWIST, AND STAPLE TO POST IN ACCORDANCE WITH THIS DETAIL.
7. EXTEND BOTH ENDS OF THE SILT FENCE A MINIMUM OF FIVE HORIZONTAL FEET UPSLOPE AT 45 DEGREES TO THE MAIN FENCE ALIGNMENT TO PREVENT RUNOFF FROM GOING AROUND THE ENDS OF THE SILT FENCE.
8. REMOVE ACCUMULATED SEDIMENT AND DEBRIS WHEN BULGES DEVELOP IN SILT FENCE OR WHEN SEDIMENT REACHES 25% OF FENCE HEIGHT. REPLACE GEOTEXTILE IF TORN. IF UNDERMINING OCCURS, REINSTALL FENCE.

STANDARD INLET PROTECTION

STANDARD SYMBOL: SIP

TYPE A MAXIMUM DRAINAGE AREA = ¼ ACRE
TYPE B MAXIMUM DRAINAGE AREA = 1 ACRE

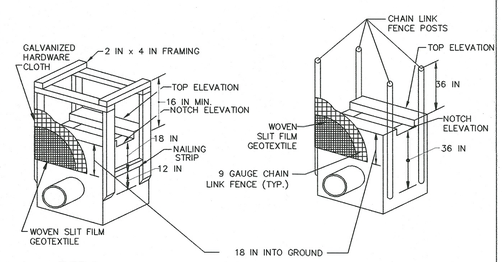

CONSTRUCTION SPECIFICATIONS

1. USE WOVEN SLIT FILM GEOTEXTILE AS SPECIFIED IN SECTION H-1 MATERIALS.
2. EXCAVATE COMPLETELY AROUND THE INLET TO A DEPTH OF 18 INCHES BELOW THE NOTCH ELEVATION.
3. FOR TYPE A, USE NOMINAL 2 INCH X 4 INCH CONSTRUCTION GRADE LUMBER POSTS, DRIVEN 1 FOOT INTO THE GROUND AT EACH CORNER OF THE INLET. PLACE NAIL STRIPS BETWEEN THE POSTS ON THE ENDS OF THE INLET. ASSEMBLE THE TOP PORTION OF THE 2X4 FRAME AS SHOWN. STRETCH ½ INCH GALVANIZED HARDWARE CLOTH TIGHTLY AROUND THE FRAME AND FASTEN SECURELY. FASTEN GEOTEXTILE SECURELY TO THE HARDWARE CLOTH WITH TIES SPACED EVERY 24 INCHES AT THE TOP AND MID SECTION. EMBED GEOTEXTILE AND HARDWARE CLOTH A MINIMUM OF 18 INCHES BELOW THE WEIR CREST. THE ENDS OF THE GEOTEXTILE MUST MEET AT A POST, BE OVERLAPPED AND FOLDED, THEN FASTENED TO THE POST.

   FOR TYPE B, USE 2⅜ INCH DIAMETER GALVANIZED STEEL POSTS OF 0.095 INCH WALL THICKNESS AND 6 FOOT LENGTH, DRIVEN A MINIMUM OF 36 INCHES BELOW THE WEIR CREST AT EACH CORNER OF THE STRUCTURE. FASTEN 9 GAUGE OR HEAVIER CHAIN LINK FENCE, 42 INCHES IN HEIGHT, SECURELY TO THE FENCE POSTS WITH WIRE TIES. FASTEN GEOTEXTILE SECURELY TO THE CHAIN LINK FENCE WITH TIES SPACED EVERY 24 INCHES AT THE TOP AND MID SECTION. EMBED GEOTEXTILE AND CHAIN LINK FENCE A MINIMUM OF 18 INCHES BELOW THE WEIR CREST.
4. BACKFILL AROUND THE INLET IN LOOSE 4 INCH LIFTS AND COMPACT UNTIL SOIL IS LEVEL WITH THE NOTCH ELEVATION ON THE ENDS AND TOP ELEVATION ON THE SIDES.
5. STORM DRAIN INLET PROTECTION REQUIRES FREQUENT MAINTENANCE. REMOVE ACCUMULATED SEDIMENT AFTER EACH RAIN EVENT TO MAINTAIN FUNCTION AND AVOID PREMATURE CLOGGING. IF INLET PROTECTION DOES NOT COMPLETELY DRAIN WITHIN 24 HOURS AFTER A STORM EVENT, IT IS CLOGGED. WHEN THIS OCCURS, REMOVE ACCUMULATED SEDIMENT AND CLEAN, OR REPLACE GEOTEXTILE AND STONE.

ONSITE CONCRETE WASHOUT STRUCTURE

STANDARD SYMBOL: CWS

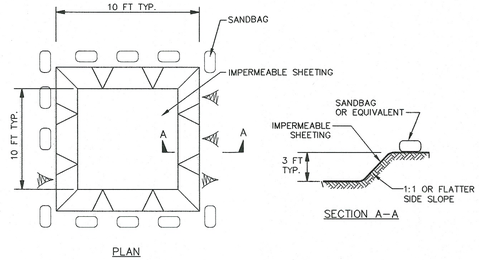

1 OF 2

Specifications
for
Excavated Drop Inlet Sediment Protection

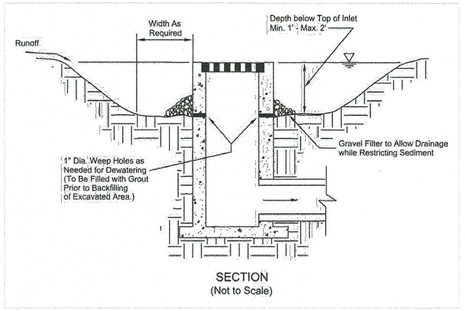

1. The excavated trap should be sized to provide a minimum storage capacity calculated at the rate of 135 cubic yards for one (1) acre of drainage area. A trap should be no less than one (1) foot, nor more than two (2) feet deep measured from the top of the inlet structure. Side slopes should not be steeper than 2:1.
2. The slopes of the trap may vary to fit the drainage area and terrain.
3. Where the area receives concentrated flows, such as in a highway median, provide the trap with a shape having a 2:1 ratio of length to width, with the length oriented in the direction of the flow.
4. Sediment should be removed and the trap restored to the original depth when the sediment has accumulated to 40% the design depth of the trap. Removed sediment should be spread in a suitable area and stabilized so it will not erode.
5. During final grading, the inlet should be protected with geotextile-stone inlet protection. Once final grading is achieved, sod or a suitable temporary erosion control material shall be implemented to protect the area until permanent vegetation is established.

ONSITE CONCRETE WASHOUT STRUCTURE

STANDARD SYMBOL: CWS

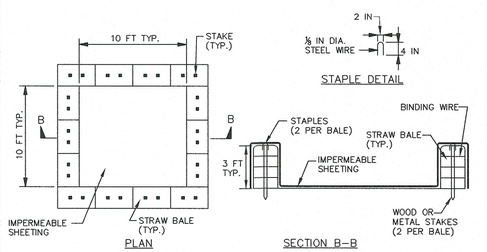

NOTE: CAN BE TWO STACKED BALES OR PARTIALLY EXCAVATED TO REACH 3 FT DEPTH

WASHOUT STRUCTURE WITH STRAW BALES

CONSTRUCTION SPECIFICATIONS

1. LOCATE WASHOUT STRUCTURE A MINIMUM OF 50 FEET AWAY FROM OPEN CHANNELS, STORM DRAIN INLETS, SENSITIVE AREAS, WETLANDS, BUFFERS AND WATER COURSES AND AWAY FROM CONSTRUCTION TRAFFIC.
2. SIZE WASHOUT STRUCTURE FOR VOLUME NECESSARY TO CONTAIN WASH WATER AND SOLIDS AND MAINTAIN AT LEAST 4 INCHES OF FREEBOARD. TYPICAL DIMENSIONS ARE 10 FEET X 10 FEET X 3 FEET DEEP.
3. PREPARE SOIL BASE FREE OF ROCKS OR OTHER DEBRIS THAT MAY CAUSE TEARS OR HOLES IN THE LINER. FOR LINER, USE 10 MIL OR THICKER UV RESISTANT, IMPERMEABLE SHEETING, FREE OF HOLES AND TEARS OR OTHER DEFECTS THAT COMPROMISE IMPERMEABILITY OF THE MATERIAL.
4. PROVIDE A SIGN FOR THE WASHOUT IN CLOSE PROXIMITY TO THE FACILITY.
5. KEEP CONCRETE WASHOUT STRUCTURE WATER TIGHT. REPLACE IMPERMEABLE LINER IF DAMAGED (E.G., RIPPED OR PUNCTURED). EMPTY OR REPLACE WASHOUT STRUCTURE THAT IS 75 PERCENT FULL, AND DISPOSE OF ACCUMULATED MATERIAL PROPERLY. DO NOT REUSE PLASTIC LINER. WET-VACUUM STORED LIQUIDS THAT HAVE NOT EVAPORATED AND DISPOSE OF IN AN APPROVED MANNER. PRIOR TO FORECASTED RAINSTORMS, REMOVE LIQUIDS OR COVER STRUCTURE TO PREVENT OVERFLOWS. REMOVE HARDENED SOLIDS, WHOLE OR BROKEN UP, FOR DISPOSAL OR RECYCLING. MAINTAIN RUNOFF DIVERSION AROUND EXCAVATED WASHOUT STRUCTURE UNTIL STRUCTURE IS REMOVED.

2 OF 2

NW NE SW SE

VERTICAL FEET 0 10 20

0 50 100
HORIZONTAL SCALE IN FEET

CHECKED BY: KAD
DATE: July, 2018
DRAWN BY: BMH
DATE: July, 2018

REVISIONS:

DESCRIPTION	DATE

Westbrook Estates Phase 5
SWP3 Notes & Details
City of Massillon
Stark County, Ohio

CIVPRO ENGINEERING
ENGINEERS-SURVEYORS-CONSTRUCTION MANAGERS
4450 BELDEN VILLAGE STREET NW, SUITE 800 CANTON, OH 44718
PHONE: (330) 268-3734 EMAIL: KAD@CIVPROENGINEERING.COM
WWW.CIVPROENGINEERING.COM

DRAWING NAME:
PROJECT NUMBER:

GENERAL EROSION AND SEDIMENT CONTROL NOTES

EROSION CONTROL SHALL CONSIST OF TEMPORARY CONTROL MEASURES AS DETAILED ON THE PLANS OR ORDERED BY THE CITY OF MASSILLON DURING THE TERM OF CONSTRUCTION TO CONTROL SOIL EROSION AND SEDIMENTATION THROUGH THE USE OF EROSION CONTROL BEST MANAGEMENT PRACTICES (BMP'S).

TEMPORARY EROSION AND SEDIMENT CONTROL ITEMS, THE LOCATION AND SIZE OF WHICH ARE DETAILED ON THE PLANS, SHALL BE INSTALLED BY THE CONTRACTOR PRIOR TO THE COMMENCEMENT OF ANY CLEARING OR EARTHVVORK OPERATIONS. CONDITIONS THAT DEVELOP DURING CONSTRUCTION THAT WERE NOT FORSEEN DURING DESIGN STAGE, THAT REQUIRE ADDITIONAL OR MODIFIED TEMPORARY OR PERMANENT BMP'S SHALL BE APPROVED BY THE DESIGN ENGINEER AND REFLECTED ON THE REVISED SWP3.

SEDIMENT PONDS, SEDIMENT TRAPS, AND PERIMETER SEDIMENT CONTROLS, SHALL BE IMPLEMENTED PRIOR TO GRADING AND WITHIN 7 DAYS FROM THE START OF GRUBBING. THEY SHALL CONTINUE TO FUNCTION UNTIL THE UP SLOPE DEVELOPMENT AREAS ARE RE-ESTABLISHED WITH VEGETATION. SEDIMENT CONTROLS SHALL NOT BE PLACED IN A STREAM.

TRENCH DEWATERING OR GROUND WATER, WHICH CONTAINS SEDIMENT SHALL PASS THROUGH A SEDIMENT SETTLING POND OR EQUALLY EFFECTIVE SEDIMENT CONTROL DEVICE. ALTERNATIVES MAY INCLUDE DEWATERING INTO A SUMP PIT, FILTER BAG, OR EXISTING VEGETATED UPSLOPE AREA. SEDIMENT LADEN WATER SHALL NOT BE DISCHARGED TO STREAMS, WATER RESOURCES, OR THE STORM SEWER SYSTEM.

THE SWP3, NOTES AND DETAILED DRAWINGS ARE INTENDED TO SERVE AS BASIC GUIDELINES. ALL EROSION AND SEDIMENT CONTROL PRACTICES SHALL MEET THE STANDARDS AND SPECIFICATIONS OF THE OHIO DEPARTMENT OF NATURAL RESOURCES (ODNR) RAINWATER AND LAND DEVELOPMENT MANUAL.

ADDITIONAL EROSION AND SEDIMENT CONTROL BMP'S MAY BE REQUIRED BY THE CITY OF MASSILLON AS UNFORSEEN SITUATIONS MAY ARISE THAT REQUIRE ADDITIONAL EROSION AND SEDIMENT CONTROL PRACTICES.

CLEARING AND GRUBBING

LIMITS OF CLEARING AND GRADING SHALL BE CLEARLY MARKED ON THE SITE WITH SIGNAGE, FLAGGING AND/OR ORANGE CONSTRUCTION FENCING.

THE CONTRACTOR SHALL LIMIT THE SURFACE AREA OF ERODIBLE EARTH MATERIAL EXPOSED BY EXCAVATION, BORROW AND FILL OPERATIONS AND PROVIDE IMMEDIATE PERMANENT OR TEMPORARY CONTROL MEASURES TO PREVENT CONTAMINATION OF ADJACENT STREAMS, WATER RESOURCES, WETLANDS, OR OTHER AREAS OF WATER IMPOUNDMENT.

CONSTRUCTION ENTRANCE

A STONED CONSTRUCTION ENTRANCE SHALL BE INSTALLED FOR ALL INGRESS AND EGRESS TO THE SITE. THE MINIMUM DIMENSIONS OF THE DRIVE SHALL BE 14 FEET WIDE BY 70 FEET LONG. THE STONE SHALL BE 6 INCHES DEEP WITH AN UNDERLAIN GEOTEXTILE FABRIC. THE DRIVE SHALL BE INSTALLED PRIOR TO ANY CLEARING AND GRUBBING. SEDIMENTS SHALL BE REMOVED FROM THE ROADWAY DAILY OR MORE FREQUENTLY IF REQUIRED BY STARK COUNTY.

STABILIZATION

PERMANENT AND TEMPORARY STABILIZATION SHALL OCCUR AS REQUIRED IN THE FOLLOWING TABLES:

TABLE 1 · PERMANENT STABILIZATION

PERMANENT STABILIZATION	
AREA REQUIRING PERMANENT STABILIZATION	*TIME FRAME TO APPLY EROSION CONTROL*
ANY AREA THAT WILL LIE DORMANT FOR ONE YEAR OR MORE	*WITHIN SEVEN DAYS OF TIIE MOST RECENT DISTURBANCE*
ANY AREA WITHIN 50 FT. OF A SURFACE WATER OF THE STATE AND AT FINAL GRADE	*WITHIN 2 DAYS OF REACHING FINAL GRADE*
ANY OTHER AREAS AT FINAL GRADE	*WITHIN 7 DAYS OF REACHING FINAL GRADE WITHIN THAT AREA*

TEMPORARY SEEDING

SEEDED AREAS SHALL BE INSPECTED AND WHERE THE SEED HAS NOT PRODUCED 80% COVER SHALL BE RESEEDED BY THE CONTRACTOR. AREAS SHALL BE STABILIZED WITH STRAW MULCH WHEN CONDITIONS PROHIBIT SEEDING.

STRAW MULCH SHALL BE APPLIED AT A RATE OF 2-3 STANDARD 45 LB. BALES PER 1000 SQ. FT OF DISTURBED AREA OR 2 TONS PER ACRE ALL HYDROSEEDING MUST BE STRAW MULCHED ACCORDING TO THE ABOVE SPECIFICATIONS UNLESS IT IS WATERED WEEKLY

ALL DETENTION PONDS. RETENTION PONDS, WATER QUAIITY STRUCTURES, SEDIMENT PONDS. SEDIMENT TRAPS. EARTHEN DIVERSIONS. OR EMBANKMENTS SHALL BE SEEDED AND STRAW MULCHED WITHIN 7 DAYS OF COMPLETED CONSTRUCTION.

TABLE 2: TEMPORARY STABILIZATION

TEMPORARY STABILIZATION	
AREA REQUIRING PERMANENT STABILIZATION	*TIME FRAME TO APPLY EROSION CONTROL*
ANY DISTURBED AREAS WITHIN 50 FEET OF A SURFACE WATER OF THE STATE AND NOT AT FINAL GRADE	*WITHIN 2 DAYS OF THE MOST RECENT DISTURBANCE IF THE AREA WILL REMAIN IDLE FOR MORE THAN 14 DAYS*
FOR ALL CONSTRUCT/ON ACTIVITIES, ANY DISTURBED AREA, INCLUDING SOIL STOCKPILES THAT WILL BE DORMANT FOR MORE THAN 14 DAYS BUT LESS THAN 1 YEAR, AND NOT WITHIN 50 FEET OF A SURFACE WATER OF THE STATE.	*WITHIN 7 DAYS OF THE MOST RECENT DISTURBANCE WITHIN THE AREA.*
DISTURBED AREAS THAT WILL REMAIN IDLE OVER WINTER	*PRIOR TO THE ONSET OF WINTER WEATHER (NOV 1) STRAW MULCH 2-3 BALES PER 1000 SQ FT OR 2 TONS PER ACRE.*
NOTE WHERE VEGETATIVE STABILIZATION TECHNIQUES ARE UNOBTAINABLE DUE TO INSTABILITY, EROSION MATTING MAY BE USED.	

PERMANENT STABILIZATION OF CONVEYANCE CHANNELS

THE CONTRACTOR SHALL UNDERTAKE SPECIAL MEASURES TO STABILIZE CHANNELS AND OUTFALLS AND PREVENT EROSIVE FLOWS. MEASURES MAY INCLUDE SEEDING, DORMANT SEEDING, MULCHING, EROSION CONTROL MATTING, SODDING, RIPRAP. NATURAL CHANNEL DESIGN WITH BIO-ENGINEERING TECHNIQUES. OR ROCK CHECK DAMS, ALL AS DEFINED IN THE MOST RECENT EDITION OF THE RAINWATER AND LAND DEVELOPMENT MANUAL PUBLISHED BY ODNR.

SOIL TRANSPORT ONTO PUBLIC ROADS

WHERE SOIL IS TRANSPORTED ONTO PUBLIC ROAD SURFACES, THE ROADS SHALL BE CLEANED THOROUGHLY BY EITHER SWEEPING OR SCRAPING AT THE END OF EACH WORK DAY OR MORE FREQUENTLY IF NEEDED IN ORDER TO ENSURE PUBLIC SAFETY. STREET WASHING IS NOT PERMITTED. IF APPLICABLE, THE CATCH BASINS NEAREST TO THE CONSTRUCTION ENTRANCE SHALL BE CLEANED WEEKLY.

ADDITIONAL REQUIREMENTS TO CONTROL SOIL TRANSPORT ONTO PUBLIC ROADS MAY INCLUDE

1. SILT FENCE OR CONSTRUCTION FENCE INSTALLED AROUND THE PERIMETER OF THE DEVELOPMENT AREA TO ENSURE ALL VEHICLE TRAFFIC ADHERES TO DESIGNATED CONSTRUCTION ENTRANCES.

2. DESIGNATED WHEEL WASHING AREAS. WASH WATER FROM THESE AREAS MUST BE DIRECTED TO A DESIGNATED SEDIMENT TRAP, SEDIMENT SETTLING POND, OR TO A DEWATERING SUMP PIT.

ERODIBLE MATERIAL RAMPS IN STREETS TO ENABLE EQUIPMENT TO CROSS CURBS SHALL BE PROPERLY REMOVED IMMEDIATELY AFTER USE.

SILT FENCE AND DIVERSIONS

SHEET FLOW RUNOFF FROM DENUDED AREAS SHALL BE INTERCEPTED BY SILT FENCE OR DIVERSIONS TO PROTECT ADJACENT PROPERTIES, WATER RESOURCES, AND WETLANDS FROM SEDIMENT TRANSPORTED VIA SHEET FLOW. WHERE INTENDED TO PROVIDE SEDIMENT CONTROL, SILT FENCE SHALL BE PLACED ON A LEVEL CONTOUR AND SHALL BE CAPABLE OF TEMPORARILY PONDING RUNOFF. THE EPA PERMIT No. DOES NOT PRECLUDE THE USE OF OTHER SEDIMENT BARRIERS DESIGNED TO CONTROL SHEET FLOW RUNOFF.

STORM WATER DIVERSION PRACTICES SHALL BE USED TO KEEP RUNOFF AWAY FROM DISTURBED AREAS AND STEEP SLOPES. SUCH DEVICES. WHICH INCLUDE SWALES, DIKES OR BERMS, MAY RECEIVE STORM WATER RUNOFF FROM AREAS UP *TO* 10 ACRES.

INLET PROTECTION

INLET PROTECTION IS MANDATORY. INLET PROTECTION SHALL CONFORM TO THE REQUIREMENTS OF THE MOST RECENT VERSION OF THE RAINWATER AND LAND DEVELOPMENT MANUAL BY ODNR. ALL INLETS RECEIVING RUNOFF FROM DRAINAGE AREAS OF ONE OR MORE ACRES WILL REQUIRE A SEDIMENT SETTLING POND. STRAW OR HAY BALES ARE NOT ACCEPTABLE FORMS OF INLET PROTECTION.

NON-SEDIMENT POLLUTANTS CONTROLS

NO SOLID OR LIQUID WASTE, INCLUDING BUILDING MATERIALS, SHALL BE DISCHARGED IN STORM WATER RUNOFF. ALL NECESSARY BMP'S MUST BE IMPLEMENTED TO PREVENT THE DISCHARGE OF NON-SEDIMENT POLLUTANTS TO THE DRAINAGE SYSTEM OF THE SITE, WATER RESOURCES, OR WETLANDS. UNDER NO CIRCUMSTANCE SHALL CONCRETE TRUCKS WASH OUT DIRECTLY INTO A DRAINAGE CHANNEL, STREET, STORM SEWER. OR OTHER PUBLIC FACILITY OR NATURAL RESOURCE. EXPOSURE OF WASTE MATERIALS TO STORM WATER IS NOT PERMITTED.

TRENCH AND GROUNDWATER CONTROL

THERE SHALL BE NO SEDIMENT LADEN OR TURBID DISCHARGES TO WATER RESOURCES OR WETLANDS RESULTING FROM DEWATERING ACTIVITIES. IF TRENCH OR GROUND WATER CONTAINS SEDIMENT, IT MUST PASS THROUGH A SEDIMENT SETTLING POND OR OTHER EQUALLY EFFECTIVE SEDIMENT CONTROL DEVICE PRIOR TO BEING DISCHARGED FROM THE CONSTRUCTION SITE. ALTERNATIVELY, SEDIMENT MAY BE REMOVED BE SETTLING IN PLACE OR BY DEWATERING INTO A SUMP PIT, FILTER BAG, OR COMPARABLE PRACTICE. GROUND WATER DEWATERING WHICH DOES NOT CONTAIN SEDIMENT OR OTHER POLLUTANTS IS NOT REQUIRED TO BE TREATED PRIOR TO DISCHARGE. HOWEVER, CARE MUST BE TAKEN WHEN DISCHARGING GROUND WATER TO ENSURE THAT IT DOES NOT BECOME POLLUTANT LADEN BY TRAVERSING OVER DISTURBED SOILS OR OTHER POLLUTANT SOURCES.

INSPECTION

ALL CONTROLS ON THE SITE SHALL BE INSPECTED AT LEAST ONCE EVERY SEVEN CALENDAR DAYS AND WITHIN 24 HOURS AFTER ANY STORM EVENT GREATER THAN ONE-HALF INCH OF RAIN PER 24 HOUR PERIOD. THE CONTRACTOR SHALL ASSIGN QUALIFIED INSPECTION PERSONNEL TO CONDUCT THESE INSPECTIONS TO ENSURE THAT THE CONTROL PRACTICES ARE FUNCTIONAL AND TO EVALUATE WHETHER THE SWP3 IS ADEQUATE, OR WHETHER ADDITIONAL CONTROL MEASURES ARE REQUIRED. QUALIFIED INSPECTION PERSONNEL ARE INDIVIDIUALS WITH KNOWLEDGE AND EXPERIENCE IN THE INSTALLATION AND MAINTENANCE OF SEDIMENT AND EROSION CONTROLS.

INSPECTIONS SHALL MEET THE FOLLOWING REQUIREMENTS:

1. DISTURBED AREAS AND AREAS USED FOR STORAGE OF MATERIALS THAT ARE EXPOSED TO PRECIPITATION SHALL BE INSPECTED FOR EVIDENCE OF OR THE POTENTIAL FOR, POLLUTANTS ENTERING THE DRAINAGE SYSTEM.

2. EROSION AND SEDIMENT CONTROL MEASURES IDENTIFIED IN THE SWP3 SHALL BE OBSERVED TO ENSURE THAT THEY ARE OPERATING CORRECTLY THE CONTRACTOR SHALL UTILIZE AN INSPECTION FORM ACCEPTABLE TO THE CITY OF AVON. THE INSPECTION FORM SHALL INCLUDE:

a. THE INSPECTION DATE.

b. NAMES, TITLES AND QUALIFICATIONS OF PERSONNEL MAKING THE INSPECTION.

c. WEATHER INFORMATION FOR THE PERIOD SINCE THE LAST INSPECTION, INCLUDING A BEST ESTIMATE OF THE BEGINNING OF EACH STORM EVENT, DURATION OF EACH STORM EVENT AND APPROXIMATE AMOUNT OF RAINFALL FOR EACH STORM EVENT IN INCHES, AND WHETHER ANY DISCHARGES OCCURRED.

d. LOCATIONS OF:

- DISCHARGES FROM SEDIMENT OR OTHER POLLUTANTS FROM THE SITE.
- BMP'S THAT NEED TO BE MAINTAINED.
- BMP'S THAT FAILED TO OPERATE AS DESIGNED OR PROVED INADEQUATE FOR A PARTICULAR LOCATION.
- WHERE ADDITIONAL BMP'S ARE NEEDED THAT DID NOT EXIST AT THE TIME OF THE INSPECTION.
- CORRECTIVE ACTION REQUIRED INCLUDING ANY NECESSARY CHANGES TO THE SWP3 AND IMPLEMENTATION DATES.

3. DISCHARGE LOCATIONS SHALL BE INSPECTED TO DETERMINE WHETHER EROSION AND SEDIMENT CONTROL MEASURES ARE EFFECTIVE IN PREVENTING SIGNIFICANT IMPACTS TO THE RECEIVING WATER RESOURCE OR WETLANDS.

4. LOCATIONS WHERE VEHICLES ENTER OR EXIT THE SITE SHALL BE INSPECTED FOR EVIDENCE OF OFF-SITE VEHICLE TRACKING

5 THE PERMIT APPLICANT SHALL MAINTAIN FOR 3 YEARS FOLLOWING FINAL STABILIZATION THE RESULTS OF THESE INSPECTIONS, THE NAMES AND QUALIFICATIONS OF THE PERSONNEL MAKING THE INSPECTIONS, THE DATES OF THE INSPECTIONS, MAJOR OBSERVATIONS RELATING TO THE IMPLEMENTATION OF THE SWP3, A CERTIFICATION AS TO WHETHER THE FACILITY IS IN COMPLIANCE WITH THE SWP3, AND INFORMATION ON ANY INCIDENTS OF NON-COMPLIANCE DETERMINED BY THESE INSPECTIONS. EMAIL WEEKLY REPORTS TO BORCHERDS@CVELIMITED.COM

MAINTENANCE

ALL CONTROL PRACTICES SHALL BE MAINTAINED AND REPAIRED AS NEEDED TO ENSURE CONTINUED PERFORMANCE OF THEIR INTENDED FUNCTION UNTIL FINAL STABILIZATION. ALL SEDIMENT CONTROL PRACTICES MUST BE MAINTAINED IN A FUNCTIONAL CONDITION UNTIL ALL UP SLOPE AREAS THEY CONTROL REACH FINAL STABILIZATION THE CONTRACTOR SHALL COMPLY WITH THE MAINTENANCE SCHEDULE CONTAINED IN THE APPROVED PLANS FOR THE PROPOSED EROSION CONTROLS. A WRITTEN DOCUMENT CONTAINING THE SIGNATURES OF ALL CONTRACTORS AND SUB-CONTRACTORS INVOLVED IN THE IMPLEMENTATION OF THE BMP'S SHALL BE MAINTAINED AT THE JOB SITE AS PROOF ACKNOWLEDGING THAT THEY HAVE REVIEWED AND UNDERSTAND THE CONDITIONS AND RESPONSIBILITIES OF THE SWP3.

WHEN INSPECTIONS REVEAL THE NEED FOR REPAIR, REPLACEMENT, OR INSTALLATION OF EROSION AND SEDIMENT CONTROL BMP'S, THE FOLLOWING PROCEDURES SHALL BE FOLLOWED:

1. WHEN PRACTICES REQUIRE REPAIR OR MAINTENANCE CONTROL PRACTICES IN NEED OF REPAIR OR MAINTENANCE, WITH THE EXCEPTION OF A SEDIMENT SETTLING POND, MUST BE REPAIRED OR MAINTAINED WITHIN 3 DAYS OF THE INSPECTION. SEDIMENT SETTLING PONDS MUST BE REPAIRED OR MAINTAINED WITHIN 10 DAYS OF THE INSPECTION.

2. WHEN PRACTICES FAIL TO PROVIDE THEIR INTENDED FUNCTION: CONTROL PRACTICES THAT FAIL TO PERFORM THEIR INTENDED FUNCTION AS DETAILED IN THE SWP3 SHALL BE REPLACED WITH ANOTHER MORE APPROPRIATE CONTROL WITHIN 10 DAYS. THE SWP3 SHALL BE AMENDED TO SHOW THE NEW CONTROL PRACTICE.

3. WHEN PRACTICES ON THE SWP3 ARE NOT INSTALLED: CONTROL PRACTICES REQUIRED BY THE SWP3 BUT NOT IMPLEMENTED AT THE TIME OF THE INSPECTION SHALL BE INSTALLED WITHIN 10 DAYS OF THE INSPECTION. IF THE PLANNED CONTROL IS NOT NEEDED, AN EXPLANATION AS TO WHY THE CONTROL IS NOT NEEDED SHALL BE ADDED TO THE SWP3.

WASTE DISPOSAL

A COVERED DUMPSTER SHALL BE MADE AVAILABLE FOR THE PROPER DISPOSAL OF GARBAGE, PLASTER, DRYWALL, GROUT, GYPSUM, AND OTHER WASTE MATERIALS. ALL CONTAINERS MUST BE LEAK PROOF. ALL WASTE MATERIAL INCLUDING TOXIC OR HAZARDOUS WASTE SHALL BE DISPOSED OF AT FACILITIES APPROVED FOR THE PERTINENT MATERIAL.

NW NE N SW SE

VERTICAL IN FEET 0 10 20

0 50 100 HORIZONTAL SCALE IN FEET

CHECKED BY: KAD

DATE: July, 2018

DRAWN BY: BMH

DATE: July, 2018

REVISIONS: DATE | DESCRIPTION

Westbrook Estates Phase 5

SWP3 Notes & Details

City of Massillon

Stark County, Ohio

CIVPRO ENGINEERING
ENGINEERS-SURVEYORS-CONSTRUCTION MANAGERS
4450 BELDEN VILLAGE STREET NW, SUITE 630 CANTON, OH 44718
PHONE: (330) 266-2532 FAX: (330) 266-2533 EMAIL: BORCHERDS@CIVPROENGINEERING.COM
WWW.CIVPROENGINEERING.COM

DRAWING NAME:

PROJECT NUMBER:

CLEAN HARD FILL

BRICKS, HARDENING CONCRETE. AND SOIL WASTE SHALL BE FREE FROM CONTAMINATION WHICH MAY LEACH CONSTITUENTS TO WATER RESOURCES OR WETLANDS CLEAN CONSTRUCTION WASTES THAT WILL BE DISPOSED OF INTO THE PROPERTY SHALL BE SUBJECT TO ANY LOCAL PROHIBITIONS FROM THIS TYPE OF DISPOSAL.

CONSTRUCTION AND DEMOLITION DEBRIS (C&DD)

ALL C&DD SHALL BE DISPOSED OF IN AN OHIO EPA APPROVED C&DD LANDFILL AS REQUIRED BY OHIO REVISED CODE (ORC) 3714. MATERIALS WHICH CONTAIN ASBESTOS MUST COMPLY WITH AIR POLLUTION REGULATIONS (SEE OHIO ADMINISTRATIVE CODE (OAC) 3745-20).

CONSTRUCTION CHEMICAL COMPOUNDS

AREAS SHALL BE DESIGNATED FOR THE MIXING OR STORAGE OF COMPOUNDS SUCH AS FERTILIZERS, LIME, ASPHALT, OR CONCRETE. THESE DESIGNATED AREAS SHALL BE LOCATED AWAY FROM WATERCOURSES, DRAINAGE DITCHES, FIELD DRAINS, OR OTHER STORM WATER DRAINAGE AREAS.

EQUIPMENT FUELING AND MAINTENANCE

ALL FUEL/LIQUID TANKS AND DRUMS SHALL BE STORED IN A MARKED STORAGE AREA. SECONDARY CONTAINMENT SHALL BE PROVIDED FOR ALL FUEL OIL STORAGE TANKS. VEHICLE FUELING AND MAINTENANCE SHALL OCCUR IN DESIGNATED AREAS. THESE DESIGNATED AREAS SHALL BE LOCATED AWAY FROM WATERCOURSES, DRAINAGE DITCHES. FIELD DRAINS, OR OTHER STORM WATER DRAINAGE AREAS.

SPILL PREVENTION CONTROL AND COUNTERMEASURES

A SPILL PREVENTION CONTROL AND COUNTERMEASURES (SPCC) PLAN MUST BE DEVELOPED FOR SITES WITH ONE ABOVE GROUND STORAGE TANK OF 660 GALLONS OR MORE, TOTAL ABOVE GROUND TANK STORAGE OF 1330 GALLONS, OR BELOW GROUND STORAGE OF 42,000 GALLONS OF FUEL.

CONCRETE WASH WATERS

CONCRETE CHUTE OR OTHER CONCRETE WASH WATERS SHALL BE DISCHARGED INTO DESIGNATED AREAS ONLY. DESIGNATED AREAS SHALL BE IDENTIFIED WITH SIGNAGE AND LOCATED AWAY FROM WATERCOURSES, DRAINAGE DITCHES. FIELD DRAINS. OR OTHER STORM WATER DRAINAGE AREAS.

CONTAMINATED SOILS

ALL CONTAMINATED SOILS MUST BE TREATED AND/OR DISPOSED IN OHIO EPA APPROVED SOLID WASTE MANAGEMENT FACILITIES OR HAZARDOUS WASTE TREATMENT, STORAGE OR DISPOSAL FACILITIES (TSDFs). RUNOFF FROM CONTAMINATED SOILS SHALL NOT BE DISCHARGED FROM THE SITE. PROPER PERMITS SHALL BE OBTAINED FOR DEVELOPMENT PROJECTS ON SOLID WASTE LANDFILL SITES OR REDEVELOPMENT SITES.

SPILL REPORTING REQUIREMENTS

IN THE EVENT OF A SMALL RELEASE (LESS THAN 25 GALLONS) OF PETROLEUM WASTE. THE LOCAL FIRE DEPARTMENT SHALL BE CONTACTED. IN THE EVENT OF A LARGER RELEASE (25 OR MORE GALLONS) OF PETROLEUM WASTE, CONTACT OHIO EPA AT 1-800-282-9378, AND THE LOCAL FIRE DEPARTMENT.

OPEN BURNING

OPEN BURNING IS NOT PERMITTED.

DUST CONTROLS AND SUPPRESSANTS

USED OIL SHALL NOT BE USED AS A DUST SUPPRESSANT. DUST CONTROLS MAY INCLUDE THE USE OF WATER TRUCKS TO WET DISTURBED AREAS, TARPING STOCKPILES, TEMPORARY STABILIZATION OF DISTURBED AREAS, AND REGULATION OF THE SPEED OF VEHICLES ON THE SITE.

STREAM CROSSINGS

STREAM CROSSINGS SHALL BE CONSTRUCTED ENTIRELY OF STONE, ROCK, OR CLEAN RECYCLED CONCRETE. SOIL OR EARTHEN MATERIAL MAY NOT BE USED. A 20 FOOT STONE APRON ON EITHER SIDE OF THE STREAM SHALL BE CONSTRUCTED TO PREVENT LOCALIZED SEDIMENTATION. THE CHANNEL BED AND BANKS SHALL BE RESTORED, AND ALL DISTURBED AREAS OF THE BANK WITHIN 50 FEET OF THE STREAM SHALL BE STABILIZED WITH SEED AND STRAW MULCH WITHIN 2 DAYS OF THE DISTURBANCE.

SEEDING AND MULCHING

SEDIMENT CONTROL SHALL BE ACCOMPLISHED BY SEEDING AND MULCHING UPON COMPLETION OF EXCAVATION OR FILL AND FINISHED GRADING IN ACCORDANCE WITH THE REQUIREMENTS OF ODOT ITEM 659 OR AS DIRECTED BY THE ENGINEER. THE FOLLOWING MIXTURES SHALL BE USED FOR SEEDING:

GENERAL USE (ODOT 659 09, CLASS 1)			
SEED MIX	SEEDING RATE	FERTILIZER	MULCH
KENTUCKY BLUEGRASS	3 LBS./1000 SQ FT	10-20-10@20 LBS./1000 SQ FT	STRAW - 2 TONS/ACRE
CREEPING RED FESCUE	3 LBS./1000 SQ FT		
ANNUAL RYEGRASS	2 LBS./1000 SQ FT		
PERENNIAL RYEGRASS	2 LBS./1000 SQ FT		
ROADSIDE DITCHES AND SWALES (ODOT 659.09, CLASS 2)			
SEED MIX	SEEDING RATE	FERTILIZER	MULCH
PERENNIAL RYEGRASS	1.5 LBS./1000 SQ FT	10-20-10@20 LBS./1000 SQ FT	STRAW - 2 TONS/ACRE
KENTUCKY 31 FESCUE	2.0 LBS./1000 SQ FT		
KENTUCKY BLUEGRASS	1.5 LBS./1000 SQ FT		
STEEP BANKS, CUT SLOPES, DETENTION AREAS, WHERE SLOPES ARE STEEPER THAN 3 1 (ODOT 659.09, CLASS 3C)			
SEED MIX	SEEDING RATE	FERTILIZER	MULCH
PERENNIAL RYEGRASS	1.8 LBS./1000 SQ FT		
ANNUAL RYEGRASS	0.3 LBS./1000 SQ FT		
TEMPORARY EROSION CONTROL (ODOT 659.09, CLASS 7)			
SEED MIX	SEEDING RATE	FERTILIZER	MULCH
ANNUAL RYEGRASS	2.02 LBS./1000 SQ FT	10-20-10@20 LBS./1000 SQ FT	STRAW - 2 TONS/ACRE

NW NE SW SE N

VERTICAL IN FEET 20 10 0

0 50 100

HORIZONTAL SCALE IN FEET

CHECKED BY: KAD

DATE: July, 2018

DRAWN BY: BMH

DATE: July, 2018

REVISIONS: DESCRIPTION DATE

Westbrook Estates Phase 5

SWP3 Notes & Details

City of Massillon

Stark County, Ohio

CIVPRO ENGINEERING
ENGINEERS-SURVEYORS-CONSTRUCTION MANAGERS
4450 BELDEN VILLAGE STREET NW, SUITE 800 CANTON, OH 44718
PHONE: (330) 268-3734 EMAIL: KAD@CIVPROENGINEERING.COM
WWW.CIVPROENGINEERING.COM

DRAWING NAME:

PROJECT NUMBER: