PROPOSED PHOENIX AVE. S.E.

2018 IMPROVEMENTS

CITY OF MASSILLON
COUNTY OF STARK
STATE OF OHIO

PROJECT DESCRIPTION

CONSTRUCTION OF NEW ROADWAY INCLUDING DRAINAGE, WATER AND SANITARY SEWER

PERMIT TO INSTALL

SANITARY SEWER PERMIT TO INSTALL (P.T.I.) HAS BEEN RECEIVED FROM THE OHIO ENVIRONMENTAL PROTECTION AGENCY THIS ____ DAY OF _____, 2018.
PTI No. _____

PERMIT TO INSTALL

WATER PERMIT TO INSTALL (P.T.I.) HAS BEEN RECEIVED FROM THE OHIO ENVIRONMENTAL PROTECTION AGENCY THIS _____ DAY OF _____, 2018.
PTI No. _____

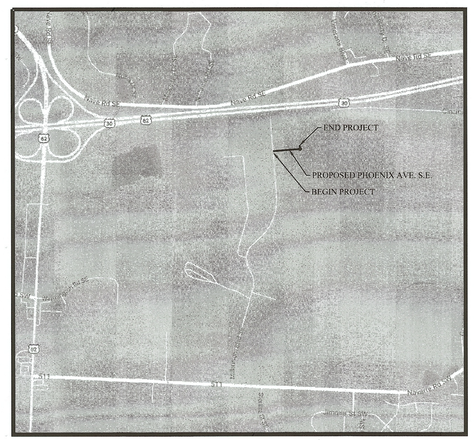

VICINITY MAP
NO SCALE

N

APPROVED BY THE MASSILLON CITY ENGINEER THIS_____ DAY OF_____, 20__.

_____
JASON M. POPIEL, PE, CPESC (OHM ADVISORS) - CITY ENGINEER

APPROVED BY STARK SOIL & WATER CONSERVATION DISTRICT BY LETTER DATED_____ DAY OF_____, 20__.

ONLY APPROVED, SIGNED PLANS BY THE CITY ENGINEER ARE TO BE USED FOR CONSTRUCTION

LEGEND

- SANITARY MANHOLE
- STORM MANHOLE
- COMBINATION MANHOLE
- CATCH BASIN
- CLEANOUT
- MONITOR WELL
- HYDRANT
- WATER LINE VALVE
- WATER SERVICE VALVE
- WATER MANHOLE
- WATER METER
- UTILITY POLE
- UTILITY POLE WITH TRANSFORMER
- LIGHT POLE
- STREET LIGHT ASSEMBLY
- GUY ANCHOR
- BOLLARD
- CHAIN LINK FENCE
- WOOD FENCE
- GUARDRAIL
- FLAG POLE
- SPRINKLER CONTROL BOX
- GAS LINE MARKER
- GAS VALVE
- GAS METER
- GASOLINE INTAKE VALVE
- GASOLINE PUMP
- ELECTRIC GROUND TRANSFORMER
- CABLE TV PEDESTAL
- TELEPHONE MANHOLE
- TRAFFIC MANHOLE
- ELECTRIC MANHOLE
- ELECTRIC METER
- PULL BOX
- TELEPHONE PEDESTAL
- SIGN
- DECIDUOUS TREE
- CONIFEROUS TREE
- MAILBOX
- NEWSPAPER BOX
- DENOTES 5/8" IRON PIN SET WITH "DEMPSEY P.S. 6914" CAP (UNLESS OTHERWISE NOTED)
- MAG NAIL SET

UTILITY STATEMENT

THE UNDERGROUND UTILITIES SHOWN HAVE BEEN LOCATED FROM FIELD SURVEY INFORMATION AND EXISTING DRAWINGS. THE SURVEYOR MAKES NO GUARANTEE THAT THE UNDERGROUND UTILITIES SHOWN COMPRISE ALL SUCH UTILITIES IN THE AREA, EITHER IN SERVICE OR ABANDONED. THE SURVEYOR FURTHER DOES NOT WARRANT THAT THE UNDERGROUND UTILITIES SHOWN ARE IN EXACT LOCATION INDICATED ALTHOUGH HE DOES CERTIFY THAT THEY ARE LOCATED AS ACCURATELY AS POSSIBLE FROM INFORMATION AVAILABLE. THE SURVEYOR HAS NOT PHYSICALLY LOCATED THE UNDERGROUND UTILITIES.

QUANTITIES

ROADWAY	952.34 L.F.
SANITARY SEWER	965.56 L.F.
STORM SEWER	1355.52 L.F.
WATER LINE	986.39 L.F.

CITY OF MASSILLON ELECTED OFFICIALS

KATHY CATAZARO-PERRY	MAYOR
ANDREA SCASSA	LAW DIRECTOR/PROSECUTOR
JAYNE FERRERO	AUDITOR
MAUDE SLAGLE	TREASURER

COUNCIL

CLAUDETTE O. ISTNICK	PRESIDENT
SARITA CUNNINGHAM	1st WARD
DAVID A. IRWIN	2nd WARD
MICHEAL L. GREGG	3rd WARD
JILL CREAMER	4th WARD
MEGAN STARRETT	5th WARD
LINDA K. LITMAN	6th WARD
PAUL MANSON	AT LARGE
ED LEWIS IV	AT LARGE
MILAN CHOVAN	AT LARGE

INDEX

DESCRIPTION	SHEET NO.
TITLE SHEET	C100
GENERAL NOTES	C100A-C100C
DEMOLITION PLAN	C101
OVERALL PLAN	C102
PLAN & PROFILES	C103-C103B
GRADING PLAN	C104
TYPICAL SECTION	C105
CROSS SECTIONS	C106-C106C
INTERSECTION DETAILS	C107
SITE DETAILS	C108-C108A
SWP3	C109
SWP3 DETAILS	C110-C110D

OHIO Utilities Protection SERVICE
Call Before You Dig
800-362-2764 or 8-1-1
www.oups.org

OGPUPS
Ohio Oil & Gas Producers Underground Protection Service
800-925-0988 or 8-1-1
www.ogpups.org

WEBER ENGINEERING SERVICES
Where Strong Relationships & Superior Service Guide Your Project

2555 Hartville Rd., Suite B
Rootstown, OH 44272
www.WeberEngineeringServices.com
330-329-2037
matt@webercivil.com

STATE OF OHIO
MATTHEW L. WEBER
61709
REGISTERED
PROFESSIONAL ENGINEER

Reg. No.: 61709

CLIENT:
GEIS CONSTRUCTION
10020 AURORA-HUDSON RD.
STREETSBORO, OHIO
JEN DOTSON
PHONE: (216) 218-3507

OWNER:
GEIS CONSTRUCTION
10020 AURORA-HUDSON RD.
STREETSBORO, OHIO
JEN DOTSON
PHONE: (216) 218-3507

PROPOSED PHOENIX AVE. S.E.
2018 IMPROVEMENTS
MASSILLON, OHIO

Issue Date
08-31-2018
09-07-2018
09-17-2018
(BID SET)
09-24-2018
△1 10-29-2018
△2 01-18-2019
△3 01-23-2019
△4 02-20-2010
△5 05-10-2019

TITLE SHEET

C100
Project No. 2018-196RW

19 SD 02

* THE FOLLOWING NOTES ARE CITY OF MASSILLON STANDARD NOTES AND MAY NOT BE APPLICABLE TO ALL PROJECTS.

UTILITIES

LISTED BELOW ARE ALL KNOWN UTILITIES LOCATED WITHIN THE PROJECT CONSTRUCTION LIMITS TOGETHER WITH THEIR RESPECTIVE OWNERS:

AT&T
50 W.BOWERY, 6TH FLOOR
AKRON, OH 44308
800-384-8057

AQUA OHIO, INC.
870 THIRD ST., N.W.
MASSILLON, OH 44647
(330) 832-5764

OHIO EDISON
STARK DIVISION
2600 S. ERIE ST.
MASSILLON, OH 44545
(330) 830-7085

MASSILLON CABLE TV
P.O. BOX 814
MASSILLON, OH 44648
(330) 833-4134

GREAT LAKES
104 6TH ST. S.W.
CANTON, OH 44702
(330) 456-2454

CITY OF MASSILLON
SANITARY SEWER
151 LINCOLN WAY EAST
MASSILLON, OH 44646
(330) 830-1722

AT&T COMMUNICATIONS
2535 E. 40TH AVE.
DENVER, CO 80205-3601
(800) 852-3786

DOMINION EAST OHIO GAS COMPANY
4725 SOUTHWAY ST. S.W.
CANTON, OH 44706
(330) 478-3142

NORTHEAST OHIO NATURAL
GAS CORP.
9081 S.R. 250
STRASBURG, OH 44680-9766
(330) 878-5589

THE CONTRACTOR SHALL NOTIFY ALL UTILITIES 48 HOURS PRIOR TO WORK.

THE LOCATION OF THE UNDERGROUND UTILITIES SHOWN ON THE PLANS ARE SHOWN AT APPROXIMATE LOCATIONS AND WHERE OBTAINED AS REQUIRED FROM THE OWNERS AS REQUIRED BY SECTION 153.64 OF THE OHIO REVISED CODE

OUPS – 1-800-362-2764
OGUPUPS – 1-800-925-0988

DATUM ELEVATION

ALL BENCHMARKS ARE BASED ON REFERENCE BENCHMARKS PROVIDED BY THE CITY OF MASSILLON

STATIONING

ALL STATIONING SHOWN IS REFERENCED TO THE BASELINE AS SHOWN.

NOTIFICATION OF SAFETY FORCES AND BUS GARAGES

THE CONTRACTOR SHALL NOTIFY ALL AGENCY LISTED BELOW AT LEAST 48 HOURS IN ADVANCE OF ANY STREET CLOSING OR TRAFFIC CHANGE.

MASSILLON SAFETY SERVICE 330-830-1702	MASSILLON FIRE DEPARTMENT 330-833-1053	PERRY TOWNSHIP HALL 330-833-2141	NORTH LAWRANCE FIRE DEPT. 330-832-6347
TUSCARAWAS TOWNSHIP HALL 330-832-4337	JACKSON FIRE DEPARTMENT 330-832-1553	MASSILLON POLICE DEPARTMENT 330-830-1735	MASSILLON SCHOOL BUS GARAGE 330-830-1849
JACKSON TOWNSHIP HALL 330-832-7416	PERRY FIRE DEPARTMENT 330-478-5121	JACKSON POLICE DEPARTMENT 330-497-7440	JACKSON SCHOOL BUS GARAGE 330-830-8042
PERRY POLICE DEPARTMENT 330-833-3865	PERRY SCHOOL BUS GARAGE 330-477-1300	STARK COUNTY SHERIFF 330-430-3887	TUSCARAWAS SCHOOL BUS GARAGE 330-837-7805
SARTA 330-454-5333			

SUBSURFACE CONDITIONS

IT IS THE OBLIGATION AND RESPONSIBILITY OF THE CONTRACTOR TO MAKE HIS OWN INVESTIGATION OF SUBSURFACE CONDITIONS PRIOR TO SUBMITTING THEIR BID. PROSPECTIVE BIDDERS ARE TO COORDINATE WITH THE OWNER FOR ACCESS TO THE SITE FOR INSPECTIONS AND EXPLORATORY EXCAVATION. THE BIDDER SHALL CONTACT THE OWNER AT LEAST 72 HOURS IN ADVANCE OF THE DESIRED INSPECTION OR EXCAVATION. THE BIDDER SHALL CONTACT O.U.P.S. AND OBTAIN LOCATIONS OF OTHER UTILITIES.

QUANTITIES

QUANTITIES ARE INDICATED FOR COMPARISON OF BIDS ONLY. IT SHALL BE THE RESPONSIBILITY OF THE CONTRACTOR TO VERIFY QUANTITIES BEFORE ORDERING MATERIALS. VARIATIONS FROM THE PLAN QUANTITIES SHALL BE APPROVED BY THE CITY OF MASSILLON ENGINEER BEFORE MATERIAL ORDERS ARE PLACED. MATERIALS REJECTED DUE TO INCOMPATIBILITY BETWEEN ORDERED QUANTITIES AND FIELD CONDITIONS SHALL BE REPLACED AT THE CONTRACTOR'S EXPENSE.

CONSTRUCTION SPECIFICATIONS & STANDARDS

ALL CONSTRUCTION IS TO BE COMPLETED ACCORDING TO THE CURRENT CITY OF MASSILLON SPECIFICATIONS AND STANDARDS, AND THE LATEST EDITION OF THE STATE OF OHIO DEPARTMENT OF TRANSPORTATION CONSTRUCTION AND MATERIAL SPECIFICATIONS. WHEN A CONFLICT ARISES BETWEEN THE CITY OF MASSILLON AND ODOT'S STANDARDS, THE MORE STRINGENT STANDARD WILL BE USED AT THE DISCRETION OF THE CITY OF MASSILLON ENGINEER. THE CONTRACTOR SHALL FOLLOW ALL OSHA AND ADA REGULATIONS AND REQUIREMENTS.

PRESERVATION OF EXISTING UTILITY SERVICES

ANY EXISTING WATER LINE, SANITARY SEWER, STORM SEWER, GAS LINE OR OTHE UTILITY IN OR OUTSIDE OF THE CONSTRUCTION LIMITS, DAMAGED DURING CONSTRUCTION OF THE PROPOSED PROJECT SHALL BE REPLACED AT THE CONTRACTORS EXPENSE.

PRESERVATION OF PRIVATE PROPERTY

THE CONTRACTOR SHALL PERFORM WORK AS TO NOT DISTURB, DAMAGE OR DESTROY ANY TELEPHONE OR POWER POLES, SIGNS, LANDSCAPING ITEMS, ETC.. ANY ITEM DAMAGED OR DESTROYED SHALL BE REPLACED AT THE CONTRACTOR'S EXPENSE AND ANY ITEM DISTURBED OR IN CONFLICT WITH THE WORK TO BE PERFORMED SHALL BE REMOVED AND RESET AT THE CONTRACTOR'S EXPENSE. PRIOR ENGINEER APPROVAL IS REQUIRED BEFORE ANY OF THE ABOVE ITEMS ARE PERFORMED.

ACCESSIBILITY TO PRIVATE PROPERTY

ACCESS TO ALL DRIVEWAYS AND PARKING AREAS WITHIN THE PROJECT LIMITS SHALL BE MAINTAINED AT ALL TIMES. THE TRENCH SHALL BE BACKFILLED AT THE END OF EACH WORK DAY TO PROVIDE ACCESS. THE CONTRACTOR MUST NOTIFY EACH PROPERTY OWNER AT LEAST 24 HOURS IN ADVANCE OF CUTTING THEIR DRIVEWAY.

WORK LIMITS

THE WORK LIMITS SHOWN ON THESE PLANS ARE FOR PHYSICAL CONSTRUCTION ONLY. THE CONTRACTOR SHALL PROVIDE FOR THE INSTALLATION AND OPERATION OF ALL WORK ZONE TRAFFIC CONTROL AND WORK ZONE TRAFFIC CONTROL DEVICES REQUIRED BY THESE PLANS WHETHER INSIDE OR OUTSIDE THESE WORK LIMITS.

REMOVAL OF TREES OR STUMPS

ALL TREES AND STUMPS REMOVED DURING CONSTRUCTION SHALL BE UNDER THE LUMP SUM BID FOR ITEM 201, CLEARING AND GRUBBING. THIS SHALL INCLUDE ALL TREES AND STUMPS WITHIN THE CONSTRUCTION LIMITS

GRADING AND FILLING OPERATIONS

THE PLACEMENT OF COMPACTED AGGREGATE SHALL NOT EXTEND PAST THE EXISTING GRADED SHOULDERS. NO EXCAVATION, GRADING, OR FILLING OPERATIONS SHALL BE PERFORMED IN ANY WETLANDS OR STREAMS, UNLESS THE REQUIRED STATE AND/OR FEDERAL PERMITS HAVE BEEN OBTAINED IN ACCORDANCE WITH ALL APPLICABLE STATE AND/OR FEDERAL LAWS AND REGULATIONS. UNDER NO CIRCUMSTANCES SHALL THE CONTRACTOR STORE EQUIPMENT AND/OR MATERIALS IN ANY WETLANDS OR STREAMS.

CLEARING AND GRUBBING

ALTHOUGH THERE ARE NO TREES OR STUMPS SPECIFICALLY MARKED FOR REMOVAL WITHIN THE LIMITS OF THE PROJECT. A LUMP SUM QUANTITY HAS BEEN INCLUDED IN THE BID FORM FOR ITEM201SPEC, CLEARING AND GRUBBING. THIS ITEM SHALL INCLUDE ALL PROVISIONS AS SET FORTH IN THE 2008 ODOT SPECIFICATIONS. REMOVAL ITEMS MAY INCLUDE TREES, STUMPS, AND BRUSH AS DETERMINED BY THE CITY ENGINEER.

ALL PROVISIONS AS SET FORTH IN THE SPECIFICATIONS UNDER THIS ITEM SHALL BE INCLUDED IN THE LUMP SUM PRICE BID FOR ITEM 201SPEC, CLEARING AND GRUBBING.

PRESERVATION OF PROPERTY CORNERS AND SURVEY MARKERS

THE CONTRACTOR SHALL PRESERVE ALL CORNERSTONES, IRON PINS, CONCRETE MONUMENTS AND ANY TYPE OF LAND MONUMENT. HE SHALL HAVE ALL LAND MONUMENTS IN THE PROXIMITY OF THE WORK REFERENCED. HE SHALL REPLACE DESTROYED OR DAMAGED MONUMENTS AND SHAL FURNISH A CERTIFICATION BY AN OHIO REGISTERED SURVEYOR THAT THE MONUMENTS HAVE BEEN RESTORED.

REMOVAL AND RELOCATION OF EXISTING UTILITIES

THE CONTRACTOR IS REQUIRED TO COOPERATE WITH EACH RESPECTIVE UTILITY OWNER FOR THE REMOVAL AND RELOCATION OF ANY AND ALL UTILITIES THAT CREATE A CONFLICT WITH CONSTRUCTION OF THE PROJECT.

CROSSING OR CONNECTING TO EXISTING PIPES AND UTILITIES

WHERE THE PLANS PROVIDE FOR A PROPOSED CONDUIT TO BE CONNECTED TO, OR CROSS OVER OR UNDER AN EXISTING SEWER OR UNDERGROUND UTILITY, THE CONTRACTOR SHALL LOCATE THE EXISTING PIPES OR UTILITIES BOTH AS TO LINE AND GRADE BEFORE STARTING TO LAY THE PROPOSED CONDUIT.

IF IT IS DETERMINED THAT THE ELEVATION OF THE EXISTING CONDUIT, OR EXISTING APPURTENANCE TO BE CONNECTED, DIFFERS FROM THE PLAN ELEVATION OR RESULTS IN A CHANGE IN THE PLAN CONDUIT SLOPE, THE CITY OF MASSILLON ENGINEER SHALL BE NOTIFIED BEFORE STARTING CONSTRUCTION OF ANY PORTION OF THE PROPOSED CONDUIT WHICH WILL BE AFFECTED BY THE VARIANCE IN THE EXISTING ELEVATIONS.

PAYMENT FOR THE OPERATIONS DESCRIBED ABOVE SHALL BE INCLUDED IN THE CONTRACT PRICE FOR THE PERTINENT 603 CONDUIT ITEM.

REVIEW OF SANITARY AND DRAINAGE FACILITIES

AN INSPECTION OF ALL EXISTING SEWERS WHICH ARE TO REMAIN IN SERVICE AND WHICH MAY BE AFFECTED BY THE WORK SHALL BE COMPLETED BEFORE AND AFTER WORK HAS COMMENCED. FINAL ACCEPTANCE BY THE CITY OF MASSILLON WILL NOT OCCUR UNTIL AFTER SAID INSPECTION. THE CONDITION OF THE EXISTING CONDUITS AND THEIR APPURTENANCES SHALL BE DETERMINED FROM FIELD OBSERVATIONS. RECORDS OF THE OBSERVATIONS SHALL BE PROVIDED IN WRITING BY THE CONTRACTOR TO THE CITY OF MASSILLON.

ALL NEW CONDUITS, INLETS, CATCH BASINS, AND MANHOLES CONSTRUCTED AS A PART OF THE PROJECT SHALL BE FREE OF ALL FOREIGN MATTER AND IN A CLEAN CONDITION BEFORE THE PROJECT WILL BE ACCEPTED BT THE CITY OF MASSILLON.

ALL EXISTING SEWERS INSPECTED INITIALLY BY THE ABOVE MENTIONED PARTIES SHALL BE MAINTAINED AND LEFT IN A CONDITION REASONABLY COMPARABLE TO THAT DETERMINED BY THE ORIGINAL INSPECTION. ANY CHANGE IN THE CONDITION RESULTING FROM THE CONTRACTOR'S OPERATIONS SHALL BE CORRECTED BY THE CONTRACTOR TO THE SATISFACTION OF THE ENGINEER.

PAYMENT FOR ALL OPERATIONS DESCRIBED ABOVE SHALL BE INCLUDED IN THE CONTRACT PRICE FOR THE PERTINENT 603 CONDUIT ITEMS.

ITEM 407. TACK COAT

THE RATE OF APPLICATION OF THE 407 TACK COAT SHALL BE SUBJECT TO ADJUSTMENT AS DIRECTED BY THE ENGINEER. QUANTITIES INDICATE AN AVERAGE APPLICATION RATE OF 0.08 GALLONS PER SQUARE YARD OF TACK COAT FOR ESTIMATING PURPOSES ONLY.

ITEM 408. BITUMINOUS PRIME COAT

THE RATE OF APPLICATION OF THE 408 PRIME COAT SHALL BE SUBJECT TO ADJUSTMENT AS DIRECTED BY THE ENGINEER. QUANTITIES INDICATE AN AVERAGE APPLICATION RATE OF 0.40 GALLONS PER SQUARE YARD OF PRIME COAT FOR ESTIMATING PURPOSES ONLY.

ITEM 659. TOPSOIL, SEEDING AND MULCHING

ITEM 659 SHALL BE APPLIED TO ALL EXPOSED SOIL AREAS DISTURBED DURING CONSTRUCTION. SUCH AS SPECIFIED IN ITEM 659 AND IS NOT LIMITED TO JUST TOPSOIL, SEEDING AND MULCHING.

THE CITY SHALL APPROVE SEED MIX PRIOR TO APPLICATION TO BE USED THROUGHOUT CONSTRUCTION LIMITS.

CONDITIONS OF WORK

ALL WORK PERFORMED UNDER THIS CONTRACT SHALL COMPLY WITH THE U.S. DEPARTMENT OF LABOR, OCCUPATIONAL SAFETY AND HEALTH ACT, STATE, COUNTY, AND CITY OF MASSILLON LAWS AND REGULATIONS. ALL WORK, AT ALL TIMES SHALL BE SUBJECT TO OBSERVATION BY THE CITY OF MASSILLON ENGINEER AND/OR HIS REPRESENTATIVE. ALL WORK SHALL COMPLY WITH THE CONDITIONS OF THE CONTRACT DOCUMENTS AND OHIO EPA, AND STANDARDS OF THE CITY OF MASSILLON. ALL ELECTRICAL WORK SHALL COMPLY WITH THE NATIONAL ELECTRICAL CODE, AND APPLICABLE CITY, COUNTY, STATE AND FEDERAL CODES.

IT SHALL BE THE RESPONSIBILITY OF THE CONTRACTOR TO MAINTAIN SAFE AND SATISFACTORY ACCESS TO ALL ABUTTING PROPERTIES TO THE PROJECT SITE. ADJACENT ROADS SHALL BE MAINTAINED AND KEPT CLEAN OF MUD AND OTHER DEBRIS THAT MAY BE CAUSED BY TRAFFIC EXITING THE WORK SITE. THE CONTRACTOR SHALL COORDINATE AND PROVIDE FOR ALL NECESSARY TRAFFIC CONTROL. TRAFFIC CONTROL SHALL FOLLOW THE MORE STRINGENT GUIDELINES OF THE CITY OF MASSILLON OR ODOT AT THE DESCREATION OF THE CITY OF MASSILLON ENGINEER.

IT SHALL BE THE RESPONSIBILITY OF THE CONTRACTOR TO PROVIDE AND MAINTAIN FACILITIES FOR A CONSTRUCTION OFFICE, EMPLOYEE PARKING, AND EMPLOYEE SANITARY FACILITIES. ON STREET PARKING WILL NOT BE PERMITTED. THE CONTRACTOR SHALL PROVIDE FOR THE LAWFUL OFF-SITE DISPOSAL OF DEMOLITION DEBRIS AND CONSTRUCTION WASTE.

EXISTING DATA

EACH CONTRACTOR SHALL VISIT THE SITE PERSONALLY TO ASCERTAIN THE NATURE OF THE WORK AND BECOME THOROUGHLY FAMILIARIZED WITH THE SITE PRIOR TO BID SUBMISSION.

EXISTING STRUCTURES, GRADES, PIPING, ETC. ARE INDICATED IN APPROXIMATE LOCATION ON THE PLAN. INFORMATION SHOWN IS NOT GUARANTEED TO BE CORRECT AND COMPLETE. THE DATA SHALL BE VERIFIED IN THE FIELD BY THE CONTRACTOR. THE EXISTENCE OF FACILITIES ABOVE OR BELOW GROUND, WHICH MAY NOT BE SHOWN, WILL NOT BE A BASIS FOR A CLAIM FOR EXTRA WORK.

EXISTING UNDERGROUND UTILITIES SHOWN ARE RECORDS PROVIDED BY UTILITY COMPANIES AND ARE APPROXIMATE ONLY. SERVICE LATERALS ARE NOT SHOWN.

IT IS THE RESPONSIBILITY OF CONTRACTOR TO NOTIFY THE CITY, PRIOR TO BID OPENING OF NON-CONFORMING OR CONFLICTING INFORMATION.

WEBER ENGINEERING SERVICES
Where Strong Relationships & Superior Service Guide Your Project
2555 Hartville Rd., Suite B
Rootstown, OH 44272
www.WeberEngineeringServices.com
330-329-2037
matt@webercivil.com

STATE OF OHIO
MATTHEW L. WEBER
61709
REGISTERED
PROFESSIONAL ENGINEER

Reg. No.: 61709

CLIENT:
GEIS CONSTRUCTION
10020 AURORA-HUDSON RD.
STREETSBORO, OHIO
JEN DOTSON
PHONE: (216) 218-3507

OWNER:
GEIS CONSTRUCTION
10020 AURORA-HUDSON RD.
STREETSBORO, OHIO
JEN DOTSON
PHONE: (216) 218-3507

PROPOSED PHOENIX AVE. S.E.
2018 IMPROVEMENTS
MASSILLON, OHIO

Issue Date
08-31-2018
09-07-2018
09-17-2018
(BID SET)
09-24-2018
△1 10-29-2018
△2 01-18-2019
△3 01-23-2019
△4 02-20-2010
△5 05-10-2019

GENERAL NOTES

C100A
Project No. 2018-196RW

19 SD 02

C:\Released - WORK\Civil 3D Projects 2018\WES2018-196 Rock & Roll\Dwg\2018-196 Sheet\N.dwg 8/10/2019 4:18:33 PM

EXCAVATED MATERIAL

ALL EXCAVATED MATERIAL AND ALL MATERIAL USED IN CONSTRUCTION OF THE WORK SHALL BE PILED AND STORED IN A MANNER THAT WILL NOT ENDANGER THE WORK AND THAT WILL LEAVE DRIVEWAYS OR OTHER CONTROLS UNOBSTRUCTED AND ACCESSIBLE WHILE THE WORK IS TO BE COMPLETED. SATISFACTORY PROVISIONS SHALL BE MADE FOR STREET DRAINAGE, AND NATURAL WATERCOURSES SHALL NOT BE OBSTRUCTED. DURING THE PROGRESS OF THE WORK, ALL MATERIAL PILES SHALL BE KEPT TRIMMED UP AND MAINTAINED IN A NEAT MANNER. ALL EXCAVATED WASTE MATERIAL SHALL BE REMOVED FROM THE PROJECT SITE, AS DIRECTED BY THE ENGINEER. THE WASTE SITE IS TO BE PROVIDED BY THE CONTRACTOR AT NO COST TO THE CITY, UNLESS OTHERWISE NOTED IN THE SPECIFICATIONS ALONG WITH A LETTER FROM THE PROPOSED WASTE SITE OWNER SITE, AS DIRECTED BY THE ENGINEER. THE WASTE SITE IS TO BE PROVIDED BY THE CONTRACTOR AT NO COST TO THE CITY, PERMITTING SUCH AND HOLDING THE CITY HARMLESS.

WORKING AREA

NO EXCAVATION WITH SIDE SLOPES STEEPER THAN 2:1 AND/OR DEEPER THAN 2' WILL BE PERMITTED. OPEN CASTINGS AND PIPES SHALL BE LEFT SECURED WHEN THE SITE IS UNATTENDED BY THE CONTRACTOR. THE CONTRACTOR SHALL SECURE ALL SUCH EXCAVATIONS, OPEN CASTINGS AND PIPES AGAINST UNAUTHORIZED ENTRY COVERING WITH STEEL PLATES, TEMPORARY BACK FILLING, FENCING AND SECURITY SERVICES SHALL BE INCLUDED IN THE PRICE BID FOR THE WORK.

ITEM 207SPEC EROSION CONTROL

THE CONTRACTOR SHALL PREPARE AND SUBMIT A STORM WATER POLLUTION CONTROL PLAN TO THE CITY OF MASSILLON ENGINEER TO BE FORWARDED TO THE APPROPRIATE PERMITTING AGENCIES. SAID PLAN MUST COMPLY WITH THE MOST CURRENT RULES AND REGULATIONS OF THE CITY OF MASSILLON.

THE CONTRACTOR SHALL BE RESPONSIBLE FOR CONSTRUCTING AND MAINTAINING STORM WATER POLLUTION CONTROL PLAN 24 HOURS A DAY FOR THE DURATION OF THIS PROJECT. ALL DEVICES (SILT FENCE, INLET PROTECTION, ROCK CHANNEL, ETC.) SHALL BE FURNISHED, ERECTED, MAINTAINED, AND REMOVED BY THE CONTRACTOR.

THIS WORK SHALL BE INCLUDED IN THE LUMP SUM PRICE FOR ITEM 207SPEC – EROSION CONTROL

CONDITIONS OF WORK

ALL WORK PERFORMED UNDER THIS CONTRACT SHALL COMPLY WITH THE U.S. DEPARTMENT OF LABOR, OCCUPATIONAL SAFETY AND HEALTH ACT, STATE, COUNTY, AND CITY OF MASSILLON LAWS AND REGULATIONS. ALL WORK, AT ALL TIMES SHALL BE SUBJECT TO OBSERVATION BY THE OWNER AND/OR ENGINEER. ALL WORK SHALL COMPLY WITH THE CONDITIONS OF THE CONTRACT DOCUMENTS, OHIO EPA, AND STANDARDS OF THE CITY OF MASSILLON. ALL ELECTRICAL WORK SHALL COMPLY WITH THE NATIONAL ELECTRICAL CODE, AND APPLICABLE CITY, COUNTY, STATE AND FEDERAL CODES.

IT SHALL BE THE RESPONSIBILITY OF THE CONTRACTOR TO MAINTAIN SAFE AND SATISFACTORY ACCESS TO ALL ABUTTING PROPERTIES TO THE PROJECT SITE. ADJACENT ROADS SHALL BE MAINTAINED AND KEPT CLEAN OF MUD AND OTHER DEBRIS THAT MAY BE CAUSED BY TRAFFIC EXITING THE WORK SITE. THE CONTRACTOR SHALL COORDINATE AND PROVIDE FOR ALL NECESSARY TRAFFIC CONTROL. TRAFFIC CONTROL SHALL BE IN ACCORDANCE WITH CURRENT CITY OF MASSILLON RULES AND REGULATIONS AND THE OHIO MANUAL OF UNIFORM TRAFFIC CONTROL DEVICES.

IT SHALL BE THE RESPONSIBILITY OF THE CONTRACTOR TO PROVIDE AND MAINTAIN FACILITIES FOR A CONSTRUCTION OFFICE, EMPLOYEE PARKING, AND EMPLOYEE SANITARY FACILITIES. ON STREET PARKING WILL NOT BE PERMITTED. THE CONTRACTOR SHALL PROVIDE FOR THE LAWFUL OFF-SITE DISPOSAL OF DEMOLITION DEBRIS AND CONSTRUCTION WASTE.

CLEAN WATER STATEMENT

ROOF DRAINS, FOUNDATION DRAINS, AND OTHER CLEAN WATER CONNECTIONS TO THE SANITARY SEWER ARE PROHIBITED.

RELATION TO WATER MAINS

SEWERS SHALL BE LAID AT LEAST 10 FEET HORIZONTALLY FROM ANY EXISTING OR PROPOSED WATER MAIN. THE DISTANCE SHALL BE MEASURED EDGE TO EDGE.

SEWERS CROSSING WATER MAINS SHALL BE LAID TO PROVIDE A MINIMUM VERTICAL DISTANCE OF 18 INCHES BETWEEN THE OUTSIDE OF THE WATER MAIN AND THE OUTSIDE OF THE SEWER.

AIR TESTING AS PER ASTM F1417

AIR TESTING WILL BE CONDUCTED AS THE PROJECT IS BEING CONSTRUCTED. AT NO TIME WILL MORE THAN 900 FEET OF PIPE BE INSTALLED BEFORE AIR TESTING IS PERFORMED. SEWAGE WILL NOT BE DIVERTED TO ANY SECTION OF PIPE, REGARDLESS OF LENGTH, UNTIL ALL TESTING IS COMPLETED AND ACCEPTED.

AFTER BACKFILLING A MANHOLE TO MANHOLE REACH OF SANITARY SEWER LINE, THE CONTRACTOR SHALL, AT HIS EXPENSE, CONDUCT THE LINE ACCEPTANCE TESTS. THE TESTS SHALL BE PERFORMED ACCORDING TO THE STATED PROCEDURES AND UNDER THE SUPERVISION OF THE CITY OF MASSILLON ENGINEER OR HIS REPRESENTATIVE.

EQUIPMENT USED SHALL MEET THE FOLLOWING MINIMUM REQUIREMENTS AND BE APPROVED BY THE CITY OF MASSILLON ENGINEER:

1. PNEUMATIC PLUGS SHALL HAVE A SEALING LENGTH EQUAL TO OR A GREATER THAN THE DIAMETER OF THE PIPE BEING INSPECTED.
2. PNEUMATIC PLUGS SHALL RESIST INTERNAL TEST PRESSURES WITHOUT REQUIRED EXTERNAL BRACING OR BLOCKING.
3. ALL AIR USED SHALL PASS THROUGH A SINGLE CONTROL PANEL.
4. THREE INDIVIDUAL HOSES SHALL BE USED FOR THE FOLLOWING CONNECTIONS:
   a. FROM CONTROL PANEL TO PNEUMATIC PLUGS FOR INFLATION.
   b. FROM CONTROL PANEL TO SEALED LINE FOR INTRODUCING THE LOW PRESSURE AIR.
   c. FROM SEALED LINE TO CONTROL PANEL FOR CONTINUALLY MONITORING AIR PRESSURE RISE IN THE SEALED LINE.

ALL PNEUMATIC PLUGS SHALL BE SEAL TESTED BEFORE BEING USED IN THE ACTUAL TEST INSTALLATION. ONE LENGTH OF PIPE SHALL BE LAID ON THE GROUND AN SEALED AT BOTH ENDS WITH THE PNEUMATIC PLUGS TO BE CHECKED. THE SEALED PIPE SHALL BE PRESSURED TO 5 PSIG. THE PLUGS MUST HOLD AGAINST THIS PRESSURE WITHOUT HAVING TO BE BRACED.

AFTER A MANHOLE TO MANHOLE REACH OF PIPE HAS BEEN BACKFILLED AND CLEANED, AND THE PNEUMATIC PLUGS ARE CHECKED BY THE ABOVE PROCEDURE, THE PLUGS SHALL BE PLACED IN THE LINE AT EACH MANHOLE. LOW PRESSURE AIR SHALL BE SLOWLY INTRODUCED INTO THIS SEALED LINE UNTIL THE INTERNAL AIR PRESSURE REACHES APPROXIMATELY 4 PSIG.

AT LEAST TWO MINUTES SHALL BE ALLOWED FOR THE AIR PRESSURE TO STABILIZE. WHEN THE PRESSURE HAS STABILIZED AND IS AT OR ABOVE 3.5 PSIG, THE AIR HOSE FROM THE CONTROL PANEL TO THE AIR SUPPLY SHALL BE DISCONNECTED. THE PORTION OF THE LINE BEING TESTED SHALL BE TERMED "ACCEPTABLE" IF THE TIME REQUIRED IN MINUTES FOR THE PRESSURE TO DECREASE FROM 3.5 TO 2.5 PSIG (GREATER THEN THE AVERAGE BACK PRESSURE OF ANY GROUNDWATER THAT MAY BE OVER THE PIPE) SHALL NOT BE LESS THAN THE TIME SHOWN FOR THE GIVEN DIAMETERS IN THE FOLLOWING TABLE:

PIPE DIAMETER IN.	MINIMUM TIME MINUTES	LENGTH FOR MINUTES TIME, FT.	TIME FOR LONGER LENGTH, S	SPECIFICATION TIME LENGTH (L) SHOWN, MINUTES							
				100 FT.	150 FT.	200 FT.	250 FT.	300 FT.	350 FT.	400 FT.	450 FT.
6	5:40	398	0.854 L	5:40	5:40	5:40	5:40	5:40	5:40	5:42	6:24
8	7:34	298	1.520 L	7:34	7:34	7:34	7:36	7:36	8:52	10:08	11:24
10	9:26	239	2.374 L	9:26	9:26	9:26	9:53	11:52	13:51	15:49	17:48
12	11:20	198	3.416 L	11:20	11:20	11:24	14:15	17:05	19:56	22:47	25:38
15	14:10	159	6.342 L	14:10	14:10	17:46	22:15	26:42	31:09	35:36	40:04
18	17:0	133	7.692 L	17:00	19:13	25:38	32:09	38:27	44:52	51:16	57:41
21	19:50	114	10.470 L	19:50	26:10	36:54	43:37	52:21	XX:XX	69.48	78:31
24	22:40	99	13.674 L	22:47	34:11	45:34	56:58	68:22	76:46	91:10	102:33
27	25:30	88	17.306 L	28:51	43:16	57:41	72:07	86:32	100:57	115:22	129:48
30	28:20	80	21.366 L	35:37	53:25	71:13	89:02	106:50	124:38	142:26	160:15
33	31:10	72	25.852 L	49:05	64:38	86:10	107:43	129:16	150:43	172:21	193:53
36	34:00	66	30.768 L	51:17	76:55	102:34	128:12	153:50	170.29	205:07	230:46

IN AREAS WHERE GROUND WATER IS KNOWN TO EXIST, THE CONTRACTOR SHALL INSTALL A 1/2 INCH DIAMETER CAPPED PIPE NIPPLE APPROXIMATELY 10 INCHES LONG, THROUGH THE MANHOLE WALL ON TOP OF ONE OF THE SANITARY SEWER LINES ENTERING THE MANHOLE. THIS SHALL BE DONE AT THE TIME THE SANITARY SEWER LINE IS INSTALLED. IMMEDIATELY PRIOR TO THE PERFORMANCE OF THE LINE ACCEPTABILITY TEST, THE GROUND WATER SHALL BE DETERMINED BY REMOVING THE PIPE CAP, BLOWING AIR THROUGH THE PIPE NIPPLE IN THE GROUND SO AS TO CLEAR IT, AND THEN CONNECTING A CLEAR PLASTIC TUBE TO THE NIPPLE. THE PLASTIC TUBE SHALL BE VERTICAL AND A MEASUREMENT OF THE HEIGHT, IN FEET OF WATER OVER THE INVERT OF THE PIPE, SHALL BE TAKEN AFTER THE WATER HAS STOPPED RISING IN THIS PLASTIC TUBE. THE HEIGHT, IN FEET OF WATER OVER THE INVERT OF THE PIPE, SHALL BE TAKEN AFTER THE WATER HAS STOPPED RISING IN THIS PLASTIC TUBE. AIR TEST PRESSURE IS TO BE INCREASED BY 0.433 PSI FOR EACH FOOT THE GROUND WATER IS ABOVE THE INVERT OF THE SEWER LINE BEING TESTED. THE ALLOWABLE DROP OF ONE POUND AND THE TIMING OF THE TEST REMAIN THE SAME.

IF A LINE ACCEPTABILITY TEST IS BEING CONDUCTED ON MORE THAN ONE MANHOLE REACH OF PIPE, THE ENTIRE SECTION BEING TESTED SHALL MEET THE LINE ACCEPTABILITY REQUIREMENTS AS IF ONLY ONE (1) OF THE MANHOLE REACHES IN THE SECTION WERE BEING TESTED.

WATER (HYDROSTATIC) TEST

THE LEAKAGE EXFILTRATION OR INFILTRATION SHALL NOT EXCEED 100 GALLONS PER INCH OF PIPE DIAMETER PER MILE PER DAY [9L/(MM OF PIPE DIAMETER KM D)] FOR ANY SECTION OF THE SYSTEM. AN EXFILTRATION OR INFILTRATION TEST SHALL BE PERFORMED WITH A MINIMUM POSITIVE HEAD OF 2 FEET (0.6 M).

NEGATIVE AIR PRESSURE (VACUUM) TESTING OF MANHOLES AS PER ASTM C-1244

PREPARATION OF THE MANHOLE:

A. ALL LIFT HOLES SHALL BE PLUGGED.

B. ALL PIPES ENTERING THE MANHOLE SHALL BE TEMPORARILY PLUGGED, TAKING CARE TO SECURELY BRACE THE PIPES AND PLUGS TO PREVENT THEM FROM BEING DRAWN INTO THE MANHOLE.

PROCEDURE:

A. THE TEST HEAD SHALL BE PLACED AT THE TOP OF THE MANHOLE IN ACCORDANCE WITH THE MANUFACTURER'S RECOMMENDATIONS.

B. A VACUUM OF 10 IN. OF MERCURY SHALL BE DRAWN ON THE MANHOLE, THE VALVE ON THE VACUUM LINE OF THE TEST HEAD CLOSED, AND THE VACUUM PUMP SHUT OFF. THE TIME SHALL BE MEASURED FOR THE VACUUM TO DROP TO 9 IN OF MERCURY.

C. THE MANHOLE SHALL PASS IF THE TIME FOR THE VACUUM READING TO DROP FROM 10 IN. OF MERCURY TO 9 IN. OF MERCURY MEETS OR EXCEEDS THE VALUES INDICATED IN TABLE BELOW.

DEPTH (FT)	MINIMUM TEST TIMES FOR MANHOLES								
	DIAMETER, IN.								
	30	33	36	42	48	54	60	66	72
	TIME, IN SECONDS								
8	11	12	14	17	20	23	26	29	33
10	14	15	18	21	25	29	33	36	41
12	17	18	21	25	30	35	39	43	49
14	20	21	25	30	35	41	46	51	57
16	22	24	39	34	40	46	52	58	67
18	25	27	32	38	45	52	59	65	73
20	28	30	35	42	50	53	65	72	81

SANITARY SEWER SPECIFICATIONS

SEWER CONSTRUCTION OUTSIDE THE 45° ZONE OF INFLUENCE SHALL BE BACKFILLED USING ON-SITE MATERIALS COMPACTED TO 95% OF MAXIMUM LABORATORY DRY DENSITY

SANITARY SEWER CONSTRUCTION PROPOSED FOR THIS PROJECT SHALL CONFORM TO THE LATEST CITY OF MASSILLON STANDARDS AND CONSTRUCTION AND MATERIALS SPECIFICATIONS, TEN STATE STANDARDS, AND THE LATEST EDITION OF THE ODOT CMS, OR MODIFIED BY THE CONTRACT DRAWINGS. IF A CONFLICT ARISES BETWEEN SAID STANDARDS IT SHALL BE AT THE DISCRETION OF THE CITY OF MASSILLON ENGINEER AS TO WHICH STANDARD SHALL GOVERN. THE PROJECT CONTRACT DRAWINGS SHALL GOVERN UNLESS NOTED OTHERWISE.

SANITARY GRAVITY SEWER PIPE AND FITTINGS SHALL BE PVC SDR 35 CONFORMING TO ASTM D-3034 UNLESS OTHERWISE NOTED. PVC COMPOUNDS SHALL CONFORM TO ASTM D-1784 PVC PIPE AND FITTINGS SHALL HAVE BELL AND SPIGOT TYPE JOINTS CONFORMING TO ASTM D-3212 AND GASKETS CONFORMING TO ASTM F-477

BACKFILL IN SEWER TRENCHES SHALL CONFORM TO ODOT ITEM 603.10 AND BE PLACED IN LAYERS SUFFICIENT TO MEET THE COMPACTION REQUIREMENT OF 100% OF MAXIMUM LABORATORY DRY DENSITY PER ASTM D-698 AND THOROUGHLY COMPACTED WITH MACHINE MOUNDED COMPACTION EQUIPMENT. THE PLACING OF BACKFILL MATERIAL SHALL BE CONTINUED UNTIL THE TRENCH IS ENTIRELY FILLED AND COMPACTED WITH THE APPROVED GRANULAR MATERIAL TO THE GRADE CALLED FOR ON THE CONTRACT DRAWINGS. EXCAVATED MATERIAL CONFORMING TO ODOT ITEM 203 SHALL BE USED FOR BACKFILLING EXISTING STRUCTURES (AFTER REMOVAL) ONLY. CRUSHED GRAVEL CONFORMING TO GRADATION REQUIREMENTS OF ODOT ITEM 304 OR APPROVED EQUAL AS SHOWN IN ODOT TABLE 703-1 SHALL BE USED FOR BACKFILLING ALL SEWER TRENCH AREAS SHOWN ON THE PLANS AND AS DIRECTED BY THE CITY OF MASSILLON ENGINEER. FLOODING, JETTING, OR PUDDLING OF BACKFILL MATERIAL WILL NOT BE PERMITTED UNLESS APPROVED BY THE CITY OF MASSILLON ENGINEER. COMPACTION TESTING OF THE BACKFILL BY A GEOTECHNICAL ENGINEER MAY BE REQUIRED BY THE OWNER AT THE EXPENSE OF THE CONTRACTOR.

SANITARY SEWERS SHALL BE AIR TESTED FOR LEAKAGE AND MANDREL TESTED FOR DEFLECTION. THE MAXIMUM ALLOWABLE PIPE DEFLECTION SHALL BE 5%.

PRIOR TO FINAL PAYMENT FOR AND ACCEPTANCE OF SANITARY SEWER INSTALLATION THE RESULTS OF THE AIR PRESSURE TESTS, TELEVISION TESTS AND MADREL TESTS SHALL BE FORWARDED TO THE CITY OF MASSILLON ENGINEER.

DEFLECTION TESTING

MAXIMUM ALLOWABLE PIPE DEFLECTION (REDUCTION IN VERTICAL INSIDE DIAMETER) SHALL BE 5%. DEFLECTION TESTS OF PIPE SHALL BE PERFORMED NOT SOONER THAN 30 DAYS AFTER THE BACKFILL HAS BEEN PROPERLY PLACED AND BEFORE FINAL ACCEPTANCE. LOCATIONS WITH EXCESS DEFLECTION SHALL BE EXCAVATED AND REPAIRED BY RE-BEDDING OR REPLACEMENT OF THE PIPE AT THE CONTRACTOR'S EXPENSE. DEVICES FOR TESTING INCLUDE A DEFLECTOMETER METER, OR PROPERLY SIZED (60, NO-GO) MANDREL OR SEWER BALL. THE DEFLECTION TESTING MUST BE CONDUCTED WITHOUT MECHANICAL PULLING DEVICES. FOR THE PURPOSE OF DEFLECTION MEASUREMENTS, THE BASE INSIDE PIPE DIAMETERS WITHOUT DEFLECTION ARE PROVIDED IN TABLE A. THE MAXIMUM ALLOWABLE DEFLECTION SHALL BE APPLIED TO THE BASE INSIDE DIAMETER IN DETERMINING THE MINIMUM PERMISSIBLE DIAMETER. IT MUST BE EMPHASIZED THAT TO INSURE ACCURATE TESTING, THE LINES MUST BE THOROUGHLY CLEANED.

TABLE A
INSIDE DIAMETERS FOR DEFLECTION MEASUREMENTS
OF ASTM D 3034 SDR 35 / SDR 21 PVC SEWER PIPE

SIZE	SDR	AVG. O.D.	BASE I.D.	DEFLECTION MANDREL
6"	35	6.275	5.742	5.54
8"	35	8.400	7.665	7.28
10"	35	10.500	9.563	9.08
12"	35	12.500	11.361	10.79

TELEVISION TESTING

ALL SANITARY SEWERS, 8-INCH DIAMETER AND LARGER, MUST PASS AN INTERNAL TELEVISION INSPECTION. THE CONTRACTOR SHALL PROVIDE A COMPLETE INTERNAL INSPECTION DVD TO THE CITY OF MASSILLON ENGINEERING DEPARTMENT. THE RECORDING PROCEDURE SHALL BE IN ACCORDANCE WITH CITY OF MASSILLON ENGINEERING DEPARTMENT STANDARDS.

LEAKAGE TESTS

LEAKAGE TESTS SHALL BE PERFORMED WHICH MAY INCLUDE APPROPRIATE WATER OR LOW PRESSURE AIR TESTING. THE TESTING METHODS SELECTED SHOULD TAKE INTO CONSIDERATION THE RANGE IN GROUNDWATER ELEVATIONS DURING THE TEST AND ANTICIPATED DURING THE DESIGN LIFE OF THE SEWER COMPLETED AND ACCEPTED.

WEBER ENGINEERING SERVICES
Where Strong Relationships & Superior Service Guide Your Project
2555 Hartville Rd., Suite B
Rootstown, OH 44272
www.WeberEngineeringServices.com
330-329-2037
matt@webercivil.com

STATE OF OHIO
MATTHEW L. WEBER
61709
REGISTERED
PROFESSIONAL ENGINEER

Reg. No.: 61709

CLIENT:
GEIS CONSTRUCTION
10020 AURORA-HUDSON RD.
STREETSBORO, OHIO
JEN DOTSON
PHONE: (216) 218-3507

OWNER:
GEIS CONSTRUCTION
10020 AURORA-HUDSON RD.
STREETSBORO, OHIO
JEN DOTSON
PHONE: (216) 218-3507

PROPOSED PHOENIX AVE. S.E.
2018 IMPROVEMENTS
MASSILLON, OHIO

Issue Date
08-31-2018
09-07-2018
09-17-2018
(BID SET)
09-24-2018
△1 10-29-2018
△2 01-18-2019
△3 01-23-2019
△4 02-20-2010
△5 05-10-2019

GENERAL NOTES

C100B
Project No. 2018-196RW

19 SD 02

C:\Autodesk - WORK\Civil 3D Projects 2018\WEBS\2018-196 Rock & Roll\Dwg\2018-196 Sheets\Aug-31\9/2019 4:18:26 PM

GENERAL WATERLINE INSTALLATION NOTES

1. CONTRACTOR TO PROVIDE LINE AND GRADE STAKES AT 100' INTERVALS FOR WATER MAIN AND FOR EACH FITTING AND APPURTENANCE. A COPY OF CUT SHEET SHALL BE PROVIDED TO FIELD INSPECTOR PRIOR TO INSTALLATION.

2. WATER WORK SHALL NOT BEGIN UNTIL AREAS OF WATERLINE CONSTRUCTION ARE ROUGH GRADED (WITHIN 1FT. OF FINISHED GRADE" AND FILL AREAS ARE COMPLETED AND COMPACTED.)

4. A MINIMUM OF 5 FEET HORIZONTAL SEPARATION SHALL BE MAINTAINED BETWEEN UTILITY CONDUIT CROSSOVERS AND WATERLINE APPURTENANCES, I.E. HYDRANTS, VALVES, TEES, ETC.

6. WATERLINE MATERIAL AND INSTALLATION PROCEDURES SHALL BE IN ACCORDANCE WITH AQUA OHIO SPECIFICATIONS. CLASS 52 DUCTILE IRON WATER MAIN POLYWRAPPED, FITTINGS CLASS 53 CEMENT LINED POLYWRAPPED AND HDPE TUBING WITH COMPRESSION FITTINGS FOR DOMESTIC SERVICES OR 2" HDPE SDR 9 POLYETHYLENE 3408 PIPE AROUND CUL-DE-SAC. IF POLYETHYLENE IS USED, A 12 GAUGE WIRE AND METALLIC CAUTION TAPE MUST BE USED.

7. ALL PIPE AND APPURTENANCES INSTALLED ON A DEPRESSURIZED WATER MAIN ARE TO BE WIPED CLEAN AND ALL INTERIOR SURFACES SATURATED WITH A MINIMUM 1% CHLORINE SOLUTION.

8. ALL MECHANICAL JOINTS ARE TO BE RESTRAINED USING MEGALUG OR "FORD" EQUIVALENT. FIRE LINE RISERS TO INCLUDE (2) 5/8" ALL THREAD RODS EXTENDING FROM LOWER BEND TO RISER FLANGE.

9. A RESTRAINT GASKET (FIELD-LOK OR APPROVED EQUAL) SHALL BE UTILIZED ON PUSH-ON JOINTS AS REQUIRED BY AQUA OHIO STANDARDS.

10. ALL DUCTILE IRON PIPE AND FITTINGS TO BE POLYWRAPPED AND TAPED AS PER DUCTILE IRON PIPE RESEARCH ASSOCIATION RECOMMENDATIONS.

11. DUCTILE IRON IN CASING SHALL BE CLASS 52, POLYWRAPPED AND ALL PUSH-ON JOINTS SHALL BE EQUIPPED WITH RESTRAINT GASKETS (FIELD-LOK OR APPROVED EQUAL) AND STAINLESS STEEL CASING SPACERS ARE REQUIRED IN STARK COUNTY.

12. ALL THRUST BLOCKING WILL BE SOLID CONCRETE BLOCKS WITH OAK WEDGES OR POURED CONCRETE, PER AQUA STANDARDS DRAWING.

13. ALL MAIN LINE VALVES ARE OPEN RIGHT AND ALL MAIN LINE VALVES ARE TO BE PLACED ON A MINIMUM OF ONE 4" SOLID CONCRETE BLOCK. ALL VALVES TO HAVE #57 LIMESTONE UP TO OPERATING NUT OF VALVE.

14. ALL FIRE HYDRANTS TO HAVE A MINIMUM OF ½ CUBIC YARD OF #57 LIMESTONE 6" ABOVE DRAIN HOLE OR EQUIVALENT SIZE BANK RUN GRAVEL. PLASTIC SHALL BE PLACED OVER STONE PRIOR TO BACKFILL. ALL HYDRANTS TO BE TURNED WITH 4-1/2" NOZZLE FACING STREET AND MEETING FIRE DEPARTMENT SPECIFICATIONS.

15. ALL VALVE BOX COVERS ARE TO BE PAINTED BLUE. CONTRACTOR ARE RESPONSIBLE FOR ADJUSTMENTS TO VALVE BOXES, CURB BOXES, AND FIRE HYDRANTS WITH RESPECT TO FINAL GRADING. ALL VALVES BOXES IN NEW OR PROPOSED PAVEMENT SHALL BE SCREW TYPE.

16. WATERLINE WILL NOT BE ACCEPTED OR PLACED IN SERVICE UNTIL CONTRACTOR CONDUCTS AND OBTAINS SATISFACTORY RESULTS OF PRESSURE AND CHLORINE TESTS. BACTERIA TEST WILL THEN BE CONDUCTED BY AQUA OHIO. ALL VALVES, HYDRANTS, AND CURB BOXES TO BE TO PROPER GRADE PRIOR TO ACCEPTANCE.

17. THE CONTRACTOR SHALL TAKE PRECAUTIONARY MEASURES TO ENSURE SAFETY OF THE PUBLIC ON AND SURROUNDING THE SITE DURING CONSTRUCTION.

18. THE LOCATION OF EXISTING UTILITIES AND STRUCTURES, BOTH ABOVE GROUND AND UNDERGROUND ARE SHOWN ON THE PLANS FROM DATA AVAILABLE AT THE TIME OF THE SURVEY AND ARE NOT NECESSARILY COMPLETE AND/OR CORRECT. THE EXACT LOCATION AND PROTECTION OF EXISTING UTILITIES AND STRUCTURES IS THE RESPONSIBILITY OF THE CONTRACTOR. DURING CONSTRUCTION, THE CONTRACTOR SHALL USE DUE DILIGENCE IN PROTECTING FROM DAMAGE ALL EXISTING UTILITIES AND STRUCTURES WHETHER SHOWN ON PLANS OR NOT. IF DAMAGE IS CAUSED, THE CONTRACTOR SHALL BE RESPONSIBLE FOR REPAIR OR RESTORATION OF SAME IN ACCORDANCE WITH THE DIRECTIONS OF THE OWNER. THE CONTRACTOR SHALL CONTACT OHIO UTILITIES PROTECTION SERVICE, AT 1-800-362-2764, TWO WORKING DAYS PRIOR TO START OF CONSTRUCTION AS REQUIRED BY OHIO LAW.

19. THE WATERLINE SHALL BE INSTALLED AT 4'-0" OF COVER FROM PROPOSED GRADE TO TOP OF THE WATERLINE. THIS 4' SHALL BE MAINTAINED UNLESS OTHERWISE NOTED.

20. A MINIMUM 10' -0" HORIZONTAL SEPARATION MUST BE MAINTAINED BETWEEN ALL STORM AND SANITARY SEWERS AND WATERLINE, OUT TO OUT.

21. A MINIMUM 18" VERTICAL SEPARATION MUST BE MAINTAINED BETWEEN ALL STORM AND SANITARY SEWERS AND WATERLINE, OUT TO OUT.

26. THE CONTRACTOR MAY DEFLECT THE WATERLINE AS PER MANUFACTURER'S SPECS WITH PERMISSION FROM AQUA AS NEEDED TO MAINTAIN MINIMUM HORIZONTAL AND VERTICAL SEPARATION DISTANCES.

30. WATER SERVICE LINE CONNECTIONS ARE NOT TO BE INSTALLED UNTIL PRESSURE TEST AND BACTERIA TESTS HAVE BEEN APPROVED.

31. THE NORMAL WORKING PRESSURE IN WATER LINES SHALL NOT BE LESS THAN 35 PSI.
NOTE: THIS LIST DOES NOT SUPERCEDE CONTRACT SPECIFICATIONS AND IS INTENDED ONLY AS A GUIDELINE TO INSTALLING WATERLINES WITHIN THE AQUA OHIO SERVICE AREA. ANY QUESTIONS SPECIFIC TO YOUR PROJECT, SHOULD BE DISCUSSED WITH THE ONSITE INSPECTOR.

WATERLINE

MATERIAL SPECIFICATIONS

DUCTILE IRON PIPE. Type required: push-on joints, cement lined, pressure class 52 for 4 inch through 16 inch, manufacturing standards AWWA C150 and C151. Polyethylene encasement shall be installed on all ductile pipe and fittings.

DUCTILE IRON FITTINGS. (tees, crosses, bends, reducers, sleeves, couplings and plugs.) Type required: mechanical joint, tees, crosses, bends and reducers are to be cement lined; working pressure rating 250 psi, manufacturing standards ANSI A21.53, ANSI A21.4 and ANSI A21.10 Compact style is acceptable. Retainer glands shall be installed wherever there is a possibility of joint separation.

FIRE HYDRANTS. Type required: post type, breakable flange design for traffic collisions, 5 1/4" diameter main valve, one 4 ½" pumper and two 2 ½" hose nozzles, 6" MJ inlet, main valve to open left, direction of opening to be indicated with arrow cast on hydrant, to be designed for 5 foot trench. National Standard threads on nozzles, O-ring packing preferred, type 304 stainless steel bolts and nuts, operating nut and nut on caps: 1 ½" pentagon, color yellow paint on body trimmed with red paint on bonnet and caps, AWWA standard C502, Mueller Centurion A423, US Pipe M-94 or Clow Medallion. Hydrant shall be outfitted with 5" Storz hydrant connection, meeting fire department specifications.

TAPPING VALVES. Type required: Resilient seat, iron body, stainless steel bonnet bolts and nuts, mechanical joint accessories, non-rising stem, for underground service, O-ring packing preferred, OPEN RIGHT (clockwise) 2 inch square operating nut, manufacturing standards and pressure ratings AWWA specification C500.

4" THROUGH 12" GATE VALVES. Type required: resilient seat, iron body, stainless steel bonnet bolts and nuts, mechanical joint accessories, non-rising stem, for underground service, O-ring packing preferred, **OPEN RIGHT** (clockwise), 2 inch square operating nut, manufacturing standards and pressure ratings AWWA C515, Mueller A-2361 or equal.

VALVE BOXES. Type required: two piece, cast iron, screw type for adjustable height, height range to be approximately 36 to 60 inches. They are to include a well fitting cast iron lid, the word "WATER" to be cast on lid.

2" WATER MAIN. 2" water main shall be soft drawn type "K" copper tubing or high density polyethylene plastic (HDPE), copper tube size, as called out on the plan. If HDPE is used, it shall be 200 psi, SDR 9 with marking tape and a 12 gage copper tracer wire laid in the trench. Brass compression fittings shall be used. Stainless steel stiffeners are necessary at each joint.

POLYETHYLENE ENCASEMENT. Type required: Eight mil thick polyethylene tube manufactured in accordance with ANSI/AWWA C105/A21.5. Polyethylene adhesive tape, 1 ½" wide, is to seal joints.

BLOW OFF ASSEMBLIES. Type required: Kupferle Foundry TF500 or approved equal. Install in valve box. Install 2" curb stop with curb box ahead of each blow off.

Revised 02/20/17

WEBER ENGINEERING SERVICES
Where Strong Relationships & Superior Service Guide Your Project

2555 Hartville Rd., Suite B
Rootstown, OH 44272
www.WeberEngineeringServices.com
330-329-2037
matt@webercivil.com

STATE OF OHIO
MATTHEW L. WEBER
61709
REGISTERED
PROFESSIONAL ENGINEER

Reg. No.: 61709

CLIENT:

GEIS CONSTRUCTION

10020 AURORA-HUDSON RD.
STREETSBORO, OHIO
JEN DOTSON
PHONE: (216) 218-3507

OWNER:

GEIS CONSTRUCTION

10020 AURORA-HUDSON RD.
STREETSBORO, OHIO
JEN DOTSON
PHONE: (216) 218-3507

PROPOSED PHOENIX AVE. S.E.
2018 IMPROVEMENTS
MASSILLON, OHIO

Issue Date
08-31-2018
09-07-2018
09-17-2018
(BID SET)
09-24-2018
△1 10-29-2018
△2 01-18-2019
△3 01-23-2019
△4 02-20-2010
△5 05-10-2019

GENERAL NOTES

C100C
Project No. 2018-196RW

19 SD 02

C:\Related - WORK\Civil 3D Projects 2018\WRS\2018-196 Roads & Roll\Dwg\2018-196 Site01N.dwg 5/10/2019 4:18:40 PM

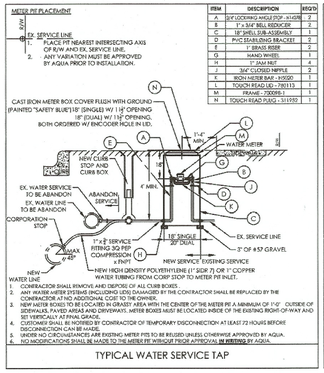

ITEM	DESCRIPTION	REQ'D
A	24" LOCKING MUELLER STOP - H10281	2
B	1" x 3/4" BELL REDUCER	2
C	18" SHELL SUB-ASSEMBLY	1
D	PVC SEARLEGRIP BRACELET	2
E	1" BRASS RISER	2
G	HAND WHEEL	1
H	1" FAM MET	4
I	3/4" CLOSED NIPPLE	2
J	IRON METER BAR - H10261	1
L	TOUCH READ LID - 7901113	1
M	FRAME - 7500B5	1
N	TOUCH READ PLUG - 5101951	1

TYPICAL WATER SERVICE TAP

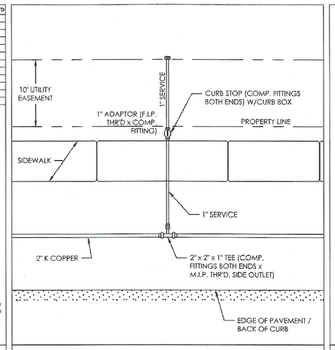

TYPICAL PRE-TAP PLAN

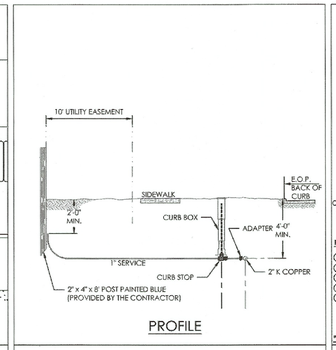

TYPICAL PRE-TAP CUL-DE-SAC LOTS ONLY

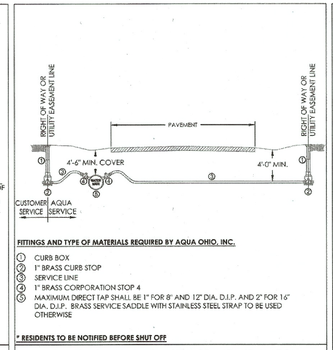

AQUA OHIO, INC. TYPICAL SERVICE LINE INSTALLATION

- FIELD-LOK GASKETS OR OTHER APPROVED PIPE RESTRAINT SYSTEMS WILL BE USED TO RESTRAIN PIPE, OR WITH PRIOR APPROVAL BY AQUA FOR THE FOLLOWING SITUATIONS:
  1. FOR VERTICAL BENDS IN LIEU OF DEAD-MAN CONCRETE RESTRAINT
  2. FOR VERTICAL AND HORIZONTAL BENDS INSTALLED IN POOR SOIL CONDITIONS
  3. FOR HYDRANTS OR BENDS WITH SLOPING GROUND BEHIND THE POINT OF THRUST

NOTE: MEG-A-LUGS OR APPROVED EQUAL SHALL BE USED TO RESTRAIN FITTINGS AND VALVES

- THRUST BLOCKS WILL NORMALLY BE USED FOR ALL HORIZONTAL BENDS. THE CONTRACTOR WILL GET WRITTEN PRIOR APPROVAL FROM AQUA TO SUBSTITUTE A RESTRAINT SYSTEM IN LIEU OF THRUST BLOCKING FOR HORIZONTAL BENDS.
- CONTRACTOR WILL SUPPLY ALL FIELD-LOK GASKETS

LINEAR FEET OF MECHANICAL PIPE RESTRAINT REQUIRED (EITHER SIDE OF FITTING)								
PIPE DIA. (IN.)	DEAD END	90°	45°	22.5°	11.25°	VERT. UP	VERT. DOWN	TEE BRANCH
4	36	16	8	0	0	4	16	18
6	60	28	13	0	0	10	24	35
8	108	54	18	0	0	18	36	90
12	162	90	36	18	0	36	72	144
16	214	118	49	23	12	12	21	200
24	304	165	68	33	16	16	30	289

CONSTRUCTION CRITERIA:
1. FOR WORKING AND/OR TEST PRESSURES< 150 PSI.
2. TYPE 2 TRENCH WITH MINIMUM OF 4.0 FT. OF COVER
3. POLYWRAPPED PIPE
4. 18 FT. PIPE LENGTHS
5. FITTINGS RESTRAINED WITH MEG-A-LUGS OR APPROVED EQUAL

NOTE: IF FIELD CONDITIONS DO NOT CONFORM TO THE NOTED CONSTRUCTION CRITERIA, THE CONTRACTOR SHALL GET WRITTEN APPROVAL FROM AQUA FOR THE NUMBER OF RESTRAINED JOINTS.

THRUST RESTRAINT WITH FIELD-LOK GASKETS

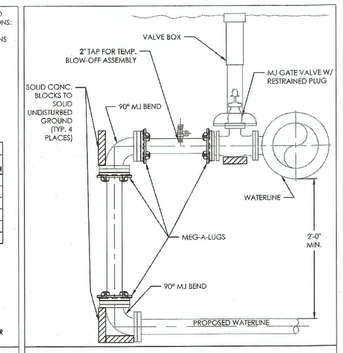

BACKSIDE TAP DETAIL

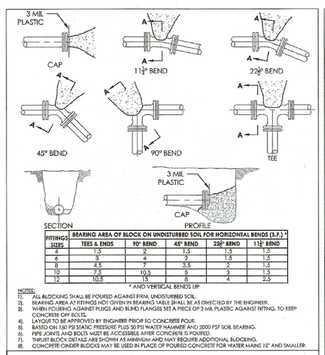

FITTINGS SIZES	BEARING AREA OF BLOCK ON UNDISTURBED SOIL FOR HORIZONTAL BENDS (S.F.) *				
	TEES & ENDS	90° BEND	45° BEND	22 1/2° BEND	11 1/4° BEND
4	1.2	2	1.2	1.2	1.2
6	3	4	2	1.5	1.5
8	4.5	7	3.5	2	1.5
10	7.5	10.5	5	3	1.5
12	10.5	15	8	4	2.2

* AND VERTICAL BENDS UP

NOTES:
1. ALL BLOCKING SHALL BE POURED AGAINST FIRM, UNDISTURBED SOIL.
2. BEARING AREA OF FITTINGS NOT GIVEN IN BEARING TABLE SHALL BE AS DIRECTED BY THE ENGINEER.
3. WHEN POURING AGAINST PLUGS AND BLIND FLANGES SET A PIECE OF 3 MIL PLASTIC AGAINST FITTING, TO KEEP CONCRETE OFF BOLTS.
4. LAYOUT TO BE APPROVED BY ENGINEER PRIOR TO CONCRETE POUR.
5. BASED ON 150 PSI STATIC PRESSURE PLUS 50 PSI WATER HAMMER AND 2000 PSF SOIL BEARING.
6. PIPE JOINTS AND BOLTS MUST BE ACCESSIBLE AFTER CONCRETE IS POURED.
7. THRUST BLOCK DETAILS ARE SHOWN AS MINIMUM AND MAY REQUIRE ADDITIONAL BLOCKING.
8. CONCRETE CINDER BLOCKS MAY BE USED IN PLACE OF POURED CONCRETE FOR WATER MAINS 12" AND SMALLER.

CONCRETE THRUST BLOCKING DETAILS

NOTES:
1. SOLID CONCRETE BLOCK TO BE USED UNDER ALL TEES, VALVES, ALSO BEHIND AND UNDER HYDRANT ELBOW.
2. CLEAN CRUSHED STONE FILL AROUND HYDRANT DRAIN TO A DEPTH OF 2'-0".
3. SOLID CONCRETE BLOCK WITH OAK WEDGES. (BRACED AGAINST UNDISTURBED SOIL)
4. THE DISTANCE FROM THE CENTERLINE OF MAIN TO THE CENTERLINE OF HYDRANT WILL BE 5' EXCEPT WHEN INDIVIDUAL CIRCUMSTANCES PROVE IT TO BE INFEASIBLE. WHEN SUCH CIRCUMSTANCES OCCUR, THE LENGTH OF THE LEAD WILL BE NOTED ON THE DRAWINGS WITH THE STATIONING.
5. ALL HYDRANTS SHALL STAND PLUMB AND HAVE PUMPER NOZZLE FACING THE CURB.
6. PUMPER NOZZLE SHALL BE OUTFITTED WITH 5" STORZ STEAMER CONNECTION.

ITEM	DESCRIPTION
A	HYDRANT ASSEMBLY PER STANDARDS BY AQUA OHIO INC.
B	6" M.J. GATE VALVE (3) PIECE VALVE BOX
C	ANCHOR TEE (CLOW F-1217)
D	6" DUCTILE IRON PIPE WITH MEGA-LUGS FOR RETAINERS

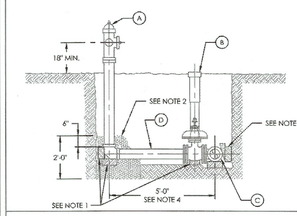

TYPICAL FIRE HYDRANT ASSEMBLY TYPE I

NOTES:
1. SOLID CONCRETE BLOCK TO BE USED UNDER ALL TEES, VALVES, ALSO BEHIND AND UNDER HYDRANT ELBOW.
2. CLEAN CRUSHED STONE FILL AROUND HYDRANT DRAIN TO A DEPTH OF 2'-0".
3. SOLID CONCRETE BLOCK WITH OAK WEDGES. (BRACED AGAINST UNDISTURBED SOIL)
4. ALL HYDRANTS SHALL STAND PLUMB AND HAVE PUMPER NOZZLE FACING THE CURB.
5. PUMPER NOZZLE SHALL BE OUTFITTED WITH 5" STORZ STEAMER CONNECTION.

ITEM	DESCRIPTION
A	HYDRANT ASSEMBLY PER STANDARDS BY AQUA OHIO INC.
B	6" M.J. GATE VALVE (3) PIECE VALVE BOX
C	ANCHOR TEE (CLOW F-1217)
D	M.J. ANCHOR COUPLING x 12"L

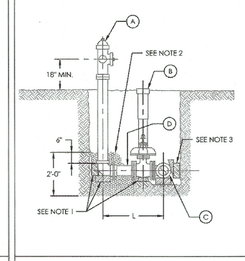

DISTANCE FROM MAIN TO HYDRANT	
MAIN LINE SIZE	L - MIN. DISTANCE (INCHES)
6"	24"
8"	28"
10"	27"
12"	28"
16"	31"
20"	33"
24"	36"

TYPICAL FIRE HYDRANT ASSEMBLY TYPE II

NOTES:
1. SOLID CONCRETE BLOCK TO BE USED UNDER ALL TEES, BENDS. ALSO BEHIND AND UNDER HYDRANT ELBOW.
2. CLEAN CRUSHED STONE FILL AROUND HYDRANT DRAIN TO A DEPTH OF 2'-0".
3. SOLID CONCRETE BLOCK WITH OAK WEDGES. (BRACED AGAINST UNDISTURBED SOIL)
4. THE DISTANCE FROM THE CENTERLINE OF MAIN TO THE CENTERLINE OF HYDRANT WILL BE 5' EXCEPT WHEN INDIVIDUAL CIRCUMSTANCES PROVE IT TO BE INFEASIBLE. WHEN SUCH CIRCUMSTANCES OCCUR, THE LENGTH OF THE LEAD WILL BE NOTED ON THE DRAWINGS WITH THE STATIONING.
5. ALL HYDRANTS SHALL STAND PLUMB AND HAVE PUMPER NOZZLE FACING THE CURB.
6. PUMPER NOZZLE SHALL BE OUTFITTED WITH 5" STORZ STEAMER CONNECTION.

ITEM	DESCRIPTION
A	HYDRANT ASSEMBLY PER STANDARDS BY AQUA OHIO, INC.
B	6" M.J. GATE VALVE (3) PIECE VALVE BOX
C	STANDARD M.J. TEE
D	M.J. ANCHOR COUPLING (F-1211)
E	M.J. ANCHOR ELBOW (F-1218)

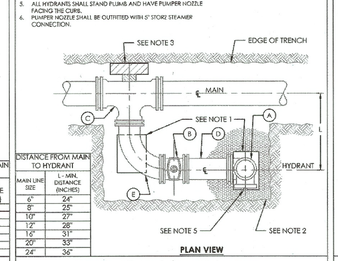

DISTANCE FROM MAIN TO HYDRANT	
MAIN LINE SIZE	L - MIN. DISTANCE (INCHES)
6"	24"
8"	28"
10"	27"
12"	28"
16"	31"
20"	33"
24"	36"

TYPICAL FIRE HYDRANT ASSEMBLY TYPE III

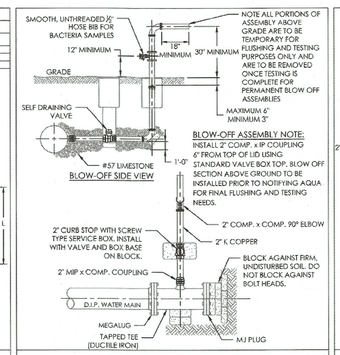

2" ADAPTOR & BLOW OFF ASSEMBLY

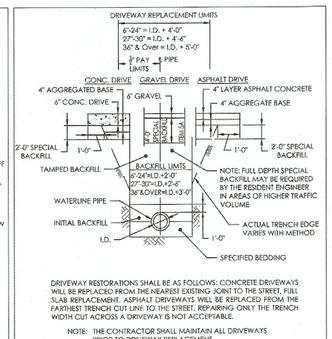

DRIVEWAY RESTORATIONS SHALL BE AS FOLLOWS: CONCRETE DRIVEWAYS WILL BE REPLACED FROM THE NEAREST EXISTING JOINT TO THE STREET. FULL SLAB REPLACEMENT. ASPHALT DRIVEWAYS WILL BE REPLACED FROM THE FARTHEST TRENCH CUT LINE TO THE STREET. REPAIRING ONLY THE TRENCH WIDTH CUT ACROSS A DRIVEWAY IS NOT ACCEPTABLE.

NOTE: THE CONTRACTOR SHALL MAINTAIN ALL DRIVEWAYS PRIOR TO DRIVEWAY REPLACEMENT.

DRIVEWAY ~ PRIVATE DRIVE RESTORATION

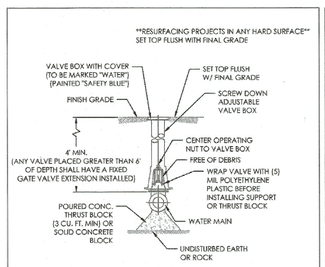

GATE VALVE INSTALLATION DETAIL

1. ALL VALVE BOXES MUST BE KEPT FREE OF DEBRIS DURING CONSTRUCTION.

GATE VALVE INSTALLATION DETAIL

~PIPE CROSSING DATA SHEET~

PIPE DATA	CARRIER PIPE	CASING PIPE
MATERIAL	DUCTILE IRON	STEEL
PROCESS OF MANUFACTURE	SPIN CAST	ELECTRIC
WELD SPECIFICATION	ANSI/AP1.51	ASTM A53
GRADE OF CLASS	SEE SPEC	GRADE B TEST
PRESSURE	SEE SPEC	35,000 PSI. YIELD
TYPE OF JOINT	PUSH ON FIELD LOK RUBBER GASKET	WELDED
TYPE OF COATING	ASPHALTIC PRIMER	NONE
CATHODIC PROJECTION	NONE	NONE
SEAL AT END OF CASING	N/A	MOLDED SYN. RUBBER END SEAL
METHOD OF INSTALLATION	PUSH ON SKIDS	JACK AND BORE

CASING PIPE SIZING

WATER MAIN SIZE	NOMINAL SIZE OF CASING PIPE	OUTSIDE DIAMETER	INSIDE DIAMETER	WALL THICKNESS (MIN.)	WEIGHT PER FOOT
6"	16"	16.000	15.250	0.375	62.64
8"	18"	18.000	17.250	0.375	70.65
12"	24"	24.000	23.000	0.500	125.61
16"	30"	30.000	29.000	0.500	157.68
20"	36"	36.000	35.000	0.500	189.75
24"	42"	42.000	41.000	0.500	221.82
30"	48"	48.000	47.000	0.500	253.89
36"	54"	54.000	53.000	0.500	285.96
42"	60"	60.000	59.000	0.500	318.03

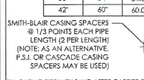

FILL CASING PIPE WITH SAND AFTER CARRIER PIPE IS IN PLACE. ENDS TO BE CLOSED OFF SUFFICIENTLY TO RETAIN THE SAND. FIELD-LOK GASKETS TO BE USED AT ALL PIPE JOINTS WITHIN CASING PIPE.

CASING PIPE DETAIL

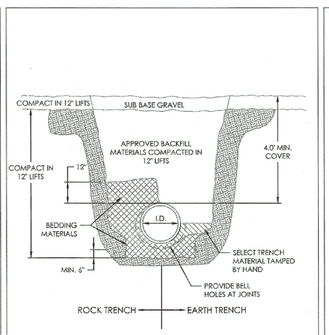

TYPICAL TRENCH DETAIL OUTSIDE OF PAVEMENT

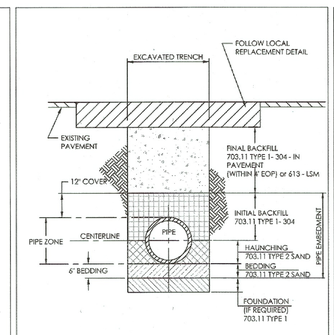

TYPICAL TRENCH DETAIL INSIDE OF PAVEMENT

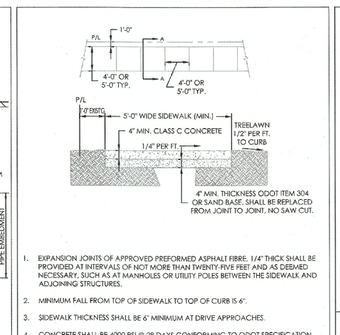

1. EXPANSION JOINTS OF APPROVED PREFORMED ASPHALT FIBRE: 1/4" THICK SHALL BE PROVIDED AT INTERVALS OF NOT MORE THAN TWENTY-FIVE FEET AND AS DEEMED NECESSARY, SUCH AS AT MANHOLES OR UTILITY POLES BETWEEN THE SIDEWALK AND ADJOINING STRUCTURES.
2. MINIMUM FALL FROM TOP OF SIDEWALK TO TOP OF CURB IS 6".
3. SIDEWALK THICKNESS SHALL BE 6" MINIMUM AT DRIVE APPROACHES.
4. CONCRETE SHALL BE 4000 PSI @ 28 DAYS CONFORMING TO ODOT SPECIFICATION #499.

TYPICAL SIDEWALK DETAIL

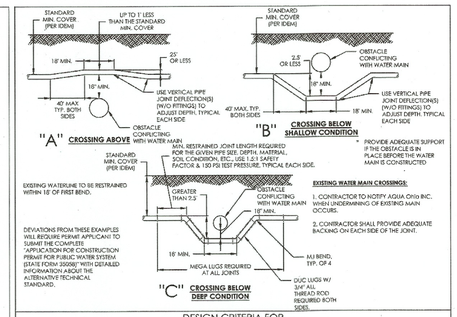

DESIGN CRITERIA FOR UTILITY CONFLICTS/CROSSINGS

DESIGNED: J. ZEIGLER	DATE: OCTOBER, 2016	N.T.S	AQUA
DRAWN: J. ZEIGLER	DATE: OCTOBER, 2016		

PREPARED BY:
SERVICE CENTER - ENGINEERING DEPT.
6650 SOUTH AVE., BOARDMAN OHIO 44512

TYPICAL WATER LINE DETAILS
AQUA OHIO, INC.

WEBER ENGINEERING SERVICES
Where Strong Relationships & Superior Service Guide Your Project
2555 Hartville Rd., Suite B
Rootstown, OH 44272
www.WeberEngineeringServices.com
330-329-2037
matt@webercivil.com
STATE OF OHIO MATTHEW L. WEBER
Reg. No.: 61709

CLIENT:
GEIS CONSTRUCTION
10020 AURORA-HUDSON RD.
STREETSBORO, OHIO
JEN DOTSON
PHONE: (216) 218-3507

OWNER:
GEIS CONSTRUCTION
10020 AURORA-HUDSON RD.
STREETSBORO, OHIO
JEN DOTSON
PHONE: (216) 218-3507

PROPOSED PHOENIX AVE. S.E.
2018 IMPROVEMENTS
MASSILLON, OHIO

Issue Date
08-31-2018
09-07-2018
09-17-2018
(BID SET)
09-24-2018
1 10-29-2018
2 01-18-2019
3 01-23-2019
4 02-20-2010
5 05-10-2019

GENERAL NOTES

C100D
Project No. 2018-196RW

19 SD 02

C:\Z-Local - WORK\Civil 3D Projects 2018\WSDS\2018-196 Stoll\N.dwg 5/10/2019 4:18:47 PM

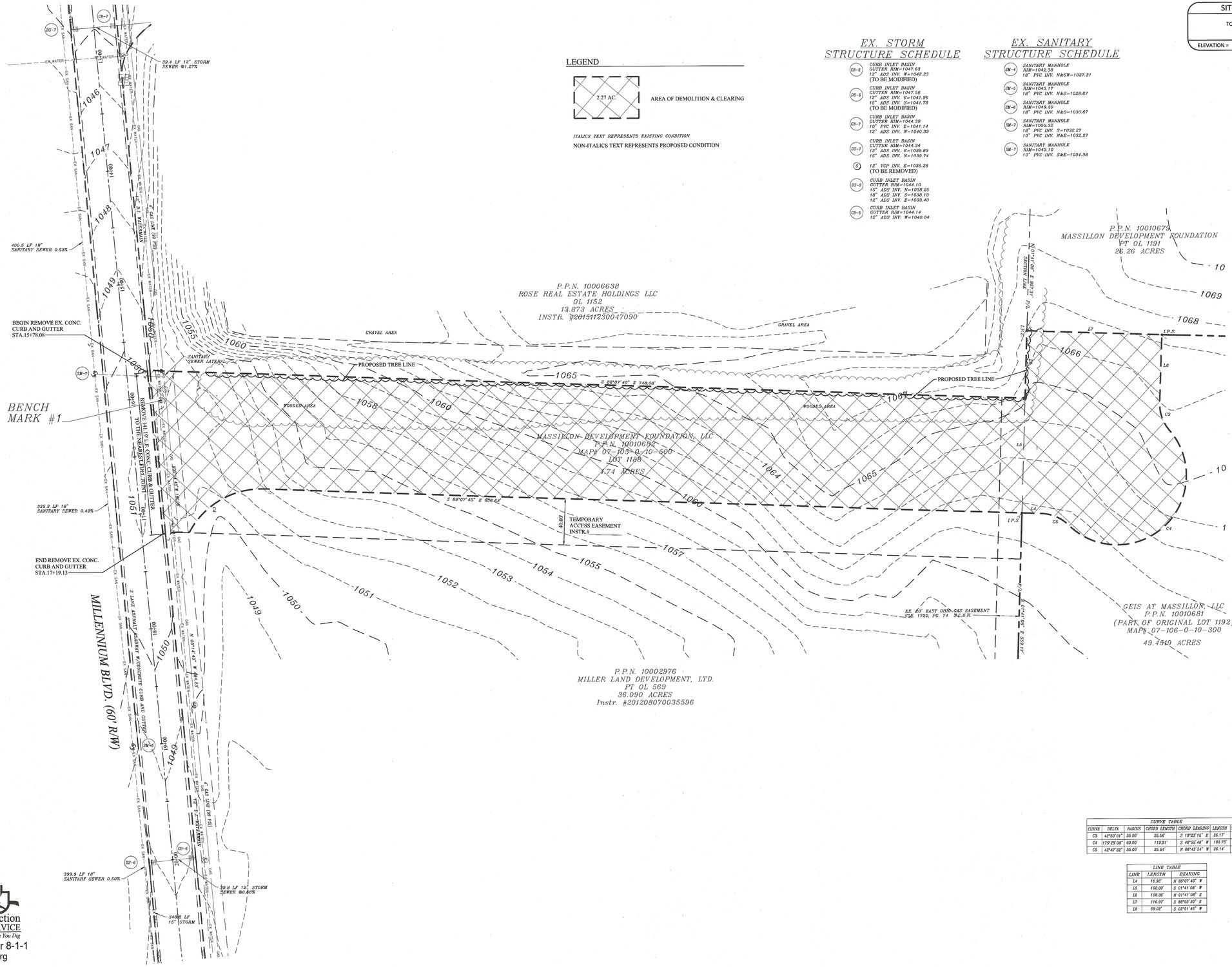

CURVE TABLE						
CURVE	DELTA	RADIUS	CHORD LENGTH	CHORD BEARING	LENGTH	TANGENT
C3	42°50' 01"	35.00'	25.56'	S 19°25' 15" E	26.17'	13.79'
C4	170°26' 08"	60.00'	119.91'	S 46°52' 45" W	185.76'	1516.54'
C5	42°47' 32"	35.00'	25.54'	N 66°43' 54" W	26.14'	13.71'

LINE TABLE		
LINE	LENGTH	BEARING
L4	16.92'	N 88°07' 40" W
L5	100.00'	S 01°41' 08" W
L6	158.36'	N 01°41' 08" E
L7	116.97'	S 88°05' 30" E
L8	59.02'	S 02°01' 46" W

Scale: 1" = 40'

OHIO Utilities Protection SERVICE
Call Before You Dig
800-362-2764 or 8-1-1
www.oups.org

OGPUPS
Ohio Oil & Gas Producers Underground Protection Service
800-925-0988 or 8-1-1
www.ogpups.org

WEBER ENGINEERING SERVICES
Where Strong Relationships & Superior Service Guide Your Project
2555 Hartville Rd., Suite B
Rootstown, OH 44272
www.WeberEngineeringServices.com
330-329-2037
matt@webercivil.com

STATE OF OHIO
MATTHEW L. WEBER
61709
REGISTERED
PROFESSIONAL ENGINEER

Reg. No.: 61709

CLIENT:
GEIS CONSTRUCTION
10020 AURORA-HUDSON RD.
STREETSBORO, OHIO
JEN DOTSON
PHONE: (216) 218-3507

OWNER:
GEIS CONSTRUCTION
10020 AURORA-HUDSON RD.
STREETSBORO, OHIO
JEN DOTSON
PHONE: (216) 218-3507

PROPOSED PHOENIX AVE. S.E.
2018 IMPROVEMENTS
MASSILLON, OHIO

Issue Date
08-31-2018
09-07-2018
09-17-2018
(BID SET)
09-24-2018
1 10-29-2018
2 01-18-2019
3 01-23-2019
4 02-20-2010
5 05-10-2019

DEMOLITION PLAN

C101
Project No. 2018-196RW

19 SD 02

C:\Dotated - WORK\Civil 3D Projects\2018\WESS\2018-196 Rock & Redff\Dwg\2018-196 Sited\Fin.dwg 5/10/2019 4:18:53 PM

DOMINION ENERGY NOTE:

IT IS THE CONTRACTORS RESPONSIBILITY TO MAINTAIN THE LATERAL AND SUBJACENT SUPPORT OF DOMINION ENERGY'S PIPELINE(S), IN COMPLIANCE TO 29 CFR, PART 1926, AND SUBPART P, (SAFE EXCAVATION & SHORING). ONE-FOOT MINIMUM VERTICAL AND HORIZONTAL CLEARANCE MUST BE MAINTAINED BETWEEN DOMINION ENERGY OHIO'S (DEO) EXISTING PIPELINE(S) AND ALL OTHER IMPROVEMENTS. EXTREME CARE SHOULD BE TAKEN NOT TO HARM ANY DEO FACILITY (PIPELINES, FTC) OR APPURTENANCE (PIPE COATING, TRACER WIRE, CATHODIC PROTECTION TEST STATION WIRES & DEVICES, VALVE BOXES, ETC.) DEO FACILITIES MUST BE PROTECTED WITH A TARP DURING BRIDGE CONSTRUCTION. THE CONTRACTOR WILL BE RESPONSIBLE AND LIABLE FOR ENSURING THAT ALL DEO EXISTING FACILITIES, ABOVE AND BELOW GROUND, REMAIN UNDAMAGED, ACCESSIBLE AND IN WORKING ORDER. THE CROSSING OF DEO'S PIPELINE WITH ANOTHER STEEL FACILITY MAY CREATE A POTENTIAL CORROSION ISSUE FOR THE PROPOSED FACILITY AND THE EXISTING DEO FACILITY. PLEASE CONTACT DOMINION ENERGY OHIO'S CORROSION DEPARTMENT: DAVE CUTLIP (330-266-2121), RICK MCDONALD (330-266-2122), OR AL HUMRICHOUSER (330-478-3757).

DEO = DOMINION ENERGY OHIO 1-800-362-7557

DEO NOTE 1:

ROADWAY LIGHT POLES AND LIGHT POLE SERVICE CONDUITS SHALL NOT BE CONSTRUCTED WITHIN THE GAS EASEMENT

DEO NOTE 2:

PROPOSED TELEPHONE, ELECTRIC & CABLE SHALL NOT ENTER THE DEO EASEMENT ALONG THE CURVE AND PARALLEL TO THE EXISTING DEO LINE. TELEPHONE & ELECTRIC SHALL CROSS PERPENDICULAR TO THE DEO LINE & THROUGH THE EASEMENT.

CURVE TABLE

CURVE	DELTA	RADIUS	CHORD LENGTH	CHORD BEARING	LENGTH	TANGENT
C3	42°55'01"	35.00'	25.56'	S 19°23'15" E	26.17'	13.73'
C4	175°28'08"	60.00'	119.91'	S 46°55'49" W	183.75'	1516.54'
C5	42°49'32"	35.00'	25.54'	N 66°45'54" W	26.14'	13.71'

LINE TABLE

LINE	LENGTH	BEARING
L4	16.92'	N 88°07'40" W
L5	100.00'	S 01°41'08" W
L6	158.36'	N 01°41'08" E
L7	116.97'	S 88°03'30" E
L8	59.02'	S 02°01'46" W

EX. STORM STRUCTURE SCHEDULE

- CB-6: CURB INLET BASIN, GUTTER RIM=1047.63, 12" ADS INV. W=1042.23
- DS-6: CURB INLET BASIN, GUTTER RIM=1047.58, 12" ADS INV. E=1041.96, 15" ADS INV. S=1041.78
- CB-7: CURB INLET BASIN, GUTTER RIM=1044.39, 10" PVC INV. E=1041.14, 12" ADS INV. W=1040.39
- DS-7: CURB INLET BASIN, GUTTER RIM=1044.34, 12" ADS INV. E=1039.89, 15" ADS INV. N=1039.74
- 6: 12" VCP INV. E=1035.28 (TO BE REMOVED)
- DS-5: CURB INLET BASIN, GUTTER RIM=1044.10, 15" ADS INV. N=1038.25, 18" ADS INV. S=1038.10, 12" ADS INV. E=1039.40
- CB-5: CURB INLET BASIN, GUTTER RIM=1044.14, 12" ADS INV. W=1040.04

EX. SANITARY STRUCTURE SCHEDULE

- SM-4: SANITARY MANHOLE, RIM=1042.38, 18" PVC INV. N&S=1027.31
- SM-5: SANITARY MANHOLE, RIM=1045.17, 18" PVC INV. N&S=1028.67
- SM-6: SANITARY MANHOLE, RIM=1049.20, 18" PVC INV. N&S=1030.67
- SM-7: SANITARY MANHOLE, RIM=1050.22, 18" PVC INV. S=1032.27, 10" PVC INV. N&E=1032.27
- SM-7: SANITARY MANHOLE, RIM=1043.10, 10" PVC INV. S&E=1034.38

SITE BENCH MARK

BENCH MARK #1
TOP NUT ON HYDRANT

ELEVATION = 1053.73

LEGEND

ITALICS TEXT REPRESENTS EXISTING CONDITION

NON-ITALICS TEXT REPRESENTS PROPOSED CONDITION

N

Scale: 1" = 40'

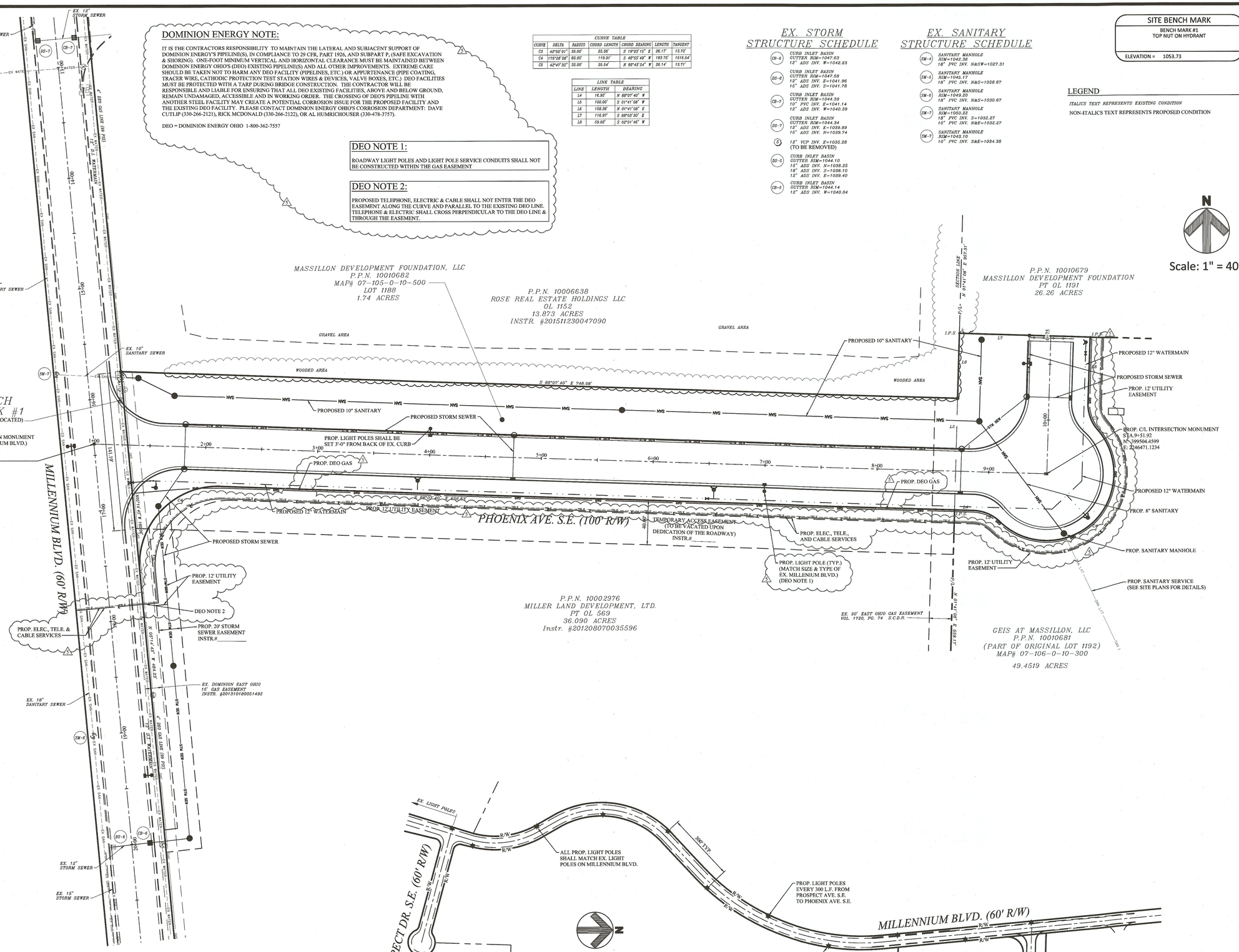

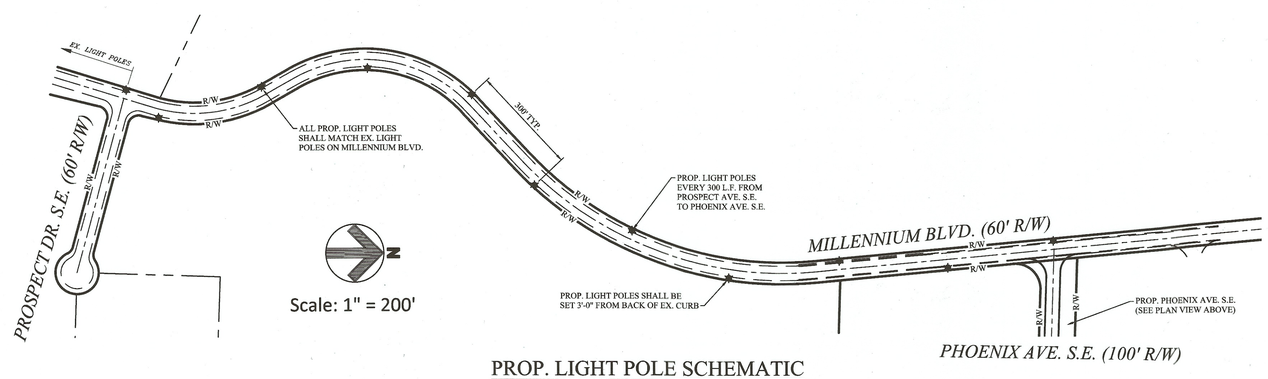

PROP. LIGHT POLE SCHEMATIC

OHIO Utilities Protection SERVICE
Call Before You Dig
800-362-2764 or 8-1-1
www.oups.org

OGPUPS
Ohio Oil & Gas Producers Underground Protection Service
800-925-0988 or 8-1-1
www.ogpups.org

WEBER ENGINEERING SERVICES
Where Strong Relationships & Superior Service Guide Your Project
2555 Hartville Rd., Suite B
Rootstown, OH 44272
www.WeberEngineeringServices.com
330-329-2037
matt@webercivil.com

STATE OF OHIO MATTHEW L. WEBER 61709 REGISTERED PROFESSIONAL ENGINEER

Reg. No.: 61709

CLIENT:

GEIS CONSTRUCTION

10020 AURORA-HUDSON RD.
STREETSBORO, OHIO
JEN DOTSON
PHONE: (216) 218-3507

OWNER:

GEIS CONSTRUCTION

10020 AURORA-HUDSON RD.
STREETSBORO, OHIO
JEN DOTSON
PHONE: (216) 218-3507

PROPOSED PHOENIX AVE. S.E.
2018 IMPROVEMENTS
MASSILLON, OHIO

Issue Date
08-31-2018
09-07-2018
09-17-2018
(BID SET)
09-24-2018
1 10-29-2018
2 01-18-2019
3 01-23-2019
4 02-20-2010
5 05-10-2019

OVERALL PLAN

C102

Project No. 2018-196RW

19SD 02

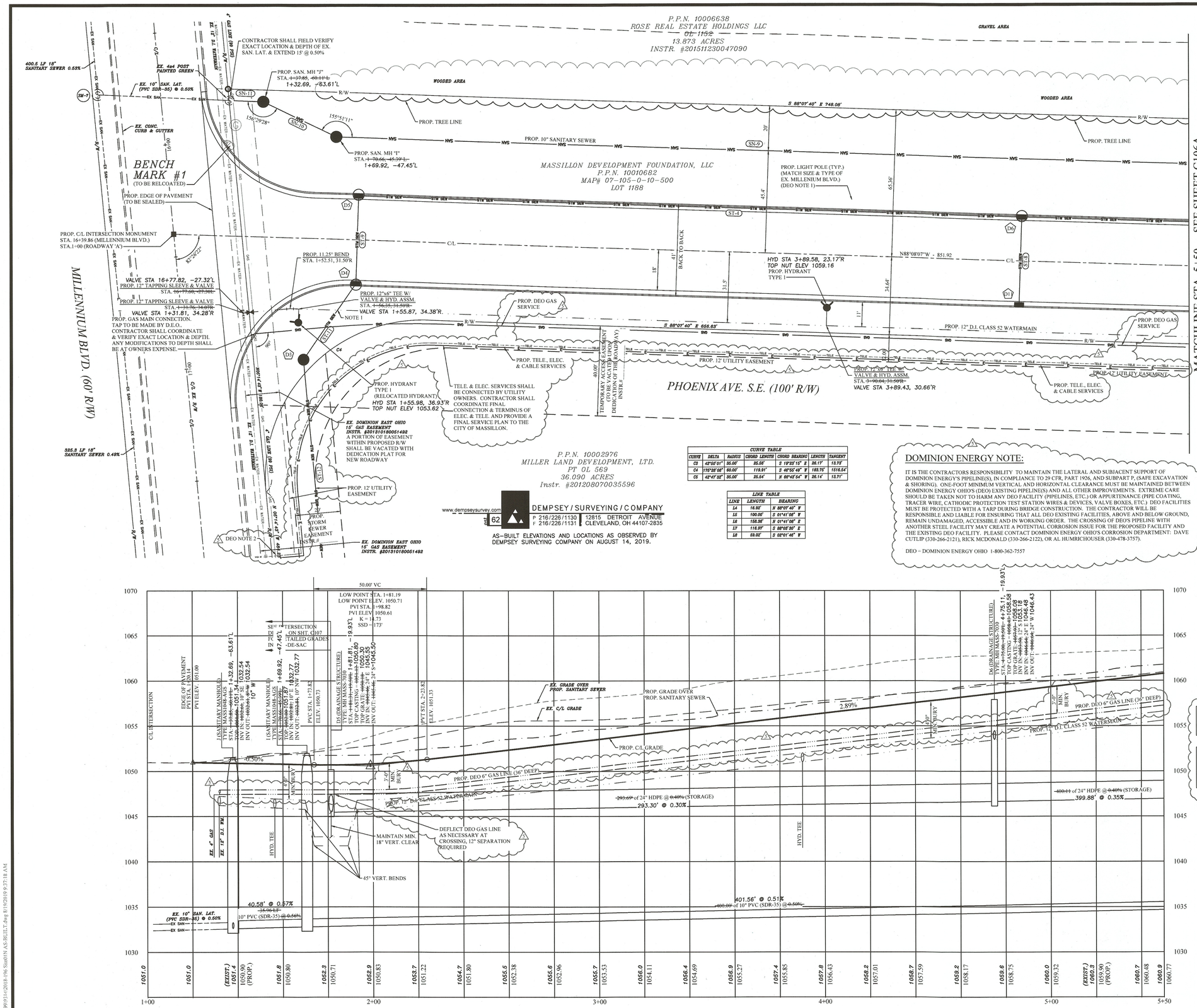

CURVE TABLE						
CURVE	DELTA	RADIUS	CHORD LENGTH	CHORD BEARING	LENGTH	TANGENT
C3	42°05'01"	35.00'	25.05'	S 19°25'15" E	26.17'	13.75'
C4	170°28'08"	60.00'	119.91'	S 46°52'46" W	165.75'	1516.54'
C5	42°47'32"	35.00'	25.54'	N 06°45'54" W	26.14'	13.71'

LINE TABLE		
LINE	LENGTH	BEARING
L4	16.92'	N 88°07'40" W
L5	100.00'	S 01°41'06" W
L6	158.36'	N 01°41'06" E
L7	116.97'	S 88°08'50" E
L8	59.02'	S 02°01'46" W

DOMINION ENERGY NOTE:

IT IS THE CONTRACTORS RESPONSIBILITY TO MAINTAIN THE LATERAL AND SUBJACENT SUPPORT OF DOMINION ENERGY'S PIPELINE(S), IN COMPLIANCE TO 29 CFR, PART 1926, AND SUBPART P, (SAFE EXCAVATION & SHORING). ONE-FOOT MINIMUM VERTICAL AND HORIZONTAL CLEARANCE MUST BE MAINTAINED BETWEEN DOMINION ENERGY OHIO'S (DEO) EXISTING PIPELINE(S) AND ALL OTHER IMPROVEMENTS. EXTREME CARE SHOULD BE TAKEN NOT TO HARM ANY DEO FACILITY (PIPELINES, ETC.) OR APPURTENANCE (PIPE COATING, TRACER WIRE, CATHODIC PROTECTION TEST STATION WIRES & DEVICES, VALVE BOXES, ETC.) DEO FACILITIES MUST BE PROTECTED WITH A TARP DURING BRIDGE CONSTRUCTION. THE CONTRACTOR WILL BE RESPONSIBLE AND LIABLE FOR ENSURING THAT ALL DEO EXISTING FACILITIES, ABOVE AND BELOW GROUND, REMAIN UNDAMAGED, ACCESSIBLE AND IN WORKING ORDER. THE CROSSING OF DEO'S PIPELINE WITH ANOTHER STEEL FACILITY MAY CREATE A POTENTIAL CORROSION ISSUE FOR THE PROPOSED FACILITY AND THE EXISTING DEO FACILITY. PLEASE CONTACT DOMINION ENERGY OHIO'S CORROSION DEPARTMENT: DAVE CUTLIP (330-266-2121), RICK MCDONALD (330-266-2122), OR AL HUMRICHOUSER (330-478-3757).

DEO – DOMINION ENERGY OHIO 1-800-362-7557

SITE BENCH MARK

BENCH MARK #1
TOP NUT ON HYDRANT

ELEVATION = 1053.73

NOTE 1:

CONTRACTOR SHALL DEFLECT W.M. AS NECESSARY TO MAINTAIN 18" MIN. VERTICAL CLEARANCE BETWEEN W.M. & SAN. SEW. AND/OR STM. SEW. AT ALL TIMES. (INSTALL BENDS WHERE NECESSARY)

ITALICS TEXT REPRESENTS EXISTING CONDITION

NON-ITALICS TEXT REPRESENTS PROPOSED CONDITION

EX. STORM STRUCTURE SCHEDULE

- (CB-6) *CURB INLET BASIN GUTTER RIM=1047.63 12" ADS INV. W=1042.23*
- (DS-6) *CURB INLET BASIN GUTTER RIM=1047.58 12" ADS INV. E=1041.96 15" ADS INV. S=1041.78*
- (CB-7) *CURB INLET BASIN GUTTER RIM=1044.39 10" PVC INV. E=1041.14 12" ADS INV. W=1040.39*
- (DS-7) *CURB INLET BASIN GUTTER RIM=1044.34 12" ADS INV. E=1039.89 15" ADS INV. N=1039.74*
- (S) *12" VCP INV. E=1035.28* (TO BE REMOVED)
- (DS-8) *CURB INLET BASIN GUTTER RIM=1044.10 15" ADS INV. N=1038.26 18" ADS INV. S=1038.10 12" ADS INV. E=1039.40*
- (CB-8) *CURB INLET BASIN GUTTER RIM=1044.14 12" ADS INV. W=1040.04*

EX. SANITARY STRUCTURE SCHEDULE

- (SM-4) *SANITARY MANHOLE RIM=1042.39 18" PVC INV. N&S=1027.31*
- (SM-5) *SANITARY MANHOLE RIM=1045.17 18" PVC INV. N&S=1028.67*
- (SM-6) *SANITARY MANHOLE RIM=1042.32 18" PVC INV. N&S=1030.67*
- (SM-7) *SANITARY MANHOLE RIM=1050.22 18" PVC INV. S=1032.27 10" PVC INV. N&S=1032.27*
- (SM-7) *SANITARY MANHOLE RIM=1043.10 10" PVC INV. S&E=1034.38*

STORM STRUCTURE TABLE	
DRAINAGE STRUCTURE	DETAILS
D11	TYPE: CB MASS-7030 TOP CASTING = ~~1058.43~~ 1058.57 TOP GRATE = ~~1057.93~~ 1058.07 INV OUT = ~~1053.90~~, 12" N 1053.62

STORM PIPE TABLE				
NAME	SIZE	LENGTH	SLOPE	TYPE
ST-8	12"	~~39.00'~~ 39.82'	~~1.03%~~ @ 1.11%	HDPE

ALL EXCESS EARTHWORK MATERIALS SHALL BE INCORPORATED INTO THE ROCK & ROLL PROJECT CUT/FILL (DISPLACE ON ROCK & ROLL SITE) IN ACCORDANCE WITH SOILS REPORT.

DEO NOTE 1:

ROADWAY LIGHT POLES AND LIGHT POLE SERVICE CONDUITS SHALL NOT BE CONSTRUCTED WITHIN THE GAS EASEMENT

DEO NOTE 2:

PROPOSED TELEPHONE & ELECTRIC SHALL NOT ENTER THE DEO EASEMENT ALONG THE CURVE AND PARALLEL TO THE EXISTING DEO LINE. TELEPHONE & ELECTRIC SHALL CROSS PERPENDICULAR TO THE DEO LINE & THROUGH THE EASEMENT.

N

Horizontal Scale: 1" = 20'
Vertical Scale: 1" = 5'

WEBER ENGINEERING SERVICES
Where Strong Relationships & Superior Service Guide Your Project
2555 Hartville Rd., Suite B
Rootstown, OH 44272
www.WeberEngineeringServices.com
330-329-2037
matt@webercivil.com

STATE OF OHIO MATTHEW L. WEBER 61709 REGISTERED PROFESSIONAL ENGINEER

Reg. No.: 61709

CLIENT:
GEIS CONSTRUCTION
10020 AURORA-HUDSON RD.
STREETSBORO, OHIO
JEN DOTSON
PHONE: (216) 218-3507

OWNER:
GEIS CONSTRUCTION
10020 AURORA-HUDSON RD.
STREETSBORO, OHIO
JEN DOTSON
PHONE: (216) 218-3507

PROPOSED PHOENIX AVE. S.E.
2018 IMPROVEMENTS
MASSILLON, OHIO

Issue Date
08-31-2018
09-07-2018
09-17-2018
(BID SET)
09-24-2018
△1 10-29-2018
△2 01-18-2019
△3 01-23-2019
△4 02-20-2010
△5 05-10-2019

PLAN AND PROFILE

C103
Project No. 2018-196RW

19 SD 02

DOMINION ENERGY NOTE:

IT IS THE CONTRACTORS RESPONSIBILITY TO MAINTAIN THE LATERAL AND SUBJACENT SUPPORT OF DOMINION ENERGY'S PIPELINE(s), IN COMPLIANCE TO 29 CFR, PART 1926, AND SUBPART P, (SAFE EXCAVATION & SHORING). ONE-FOOT MINIMUM VERTICAL AND HORIZONTAL CLEARANCE MUST BE MAINTAINED BETWEEN DOMINION ENERGY OHIO'S (DEO) EXISTING PIPELINE(S) AND ALL OTHER IMPROVEMENTS. EXTREME CARE SHOULD BE TAKEN NOT TO HARM ANY DEO FACILITY (PIPELINES, ETC.) OR APPURTENANCE (PIPE COATING, TRACER WIRE, CATHODIC PROTECTION TEST STATION WIRES & DEVICES, VALVE BOXES, ETC.) DEO FACILITIES MUST BE PROTECTED WITH A TARP DURING BRIDGE CONSTRUCTION. THE CONTRACTOR WILL BE RESPONSIBLE AND LIABLE FOR ENSURING THAT ALL DEO EXISTING FACILITIES, ABOVE AND BELOW GROUND, REMAIN UNDAMAGED, ACCESSIBLE AND IN WORKING ORDER. THE CROSSING OF DEO'S PIPELINE WITH ANOTHER STEEL FACILITY MAY CREATE A POTENTIAL CORROSION ISSUE FOR THE PROPOSED FACILITY AND THE EXISTING DEO FACILITY. PLEASE CONTACT DOMINION ENERGY OHIO'S CORROSION DEPARTMENT: DAVE CUTLIP (330-266-2121), RICK MCDONALD (330-266-2122), OR AL HUMRICHOUSER (330-478-3757).

DEO = DOMINION ENERGY OHIO 1-800-362-7557

DEO NOTE 1:

ROADWAY LIGHT POLES AND LIGHT POLE SERVICE CONDUITS SHALL NOT BE CONSTRUCTED WITHIN THE GAS EASEMENT

DEO NOTE 2:

PROPOSED TELEPHONE & ELECTRIC SHALL NOT ENTER THE DEO EASEMENT ALONG THE CURVE AND PARALLEL TO THE EXISTING DEO LINE. TELEPHONE & ELECTRIC SHALL CROSS PERPENDICULAR TO THE DEO LINE & THROUGH THE EASEMENT.

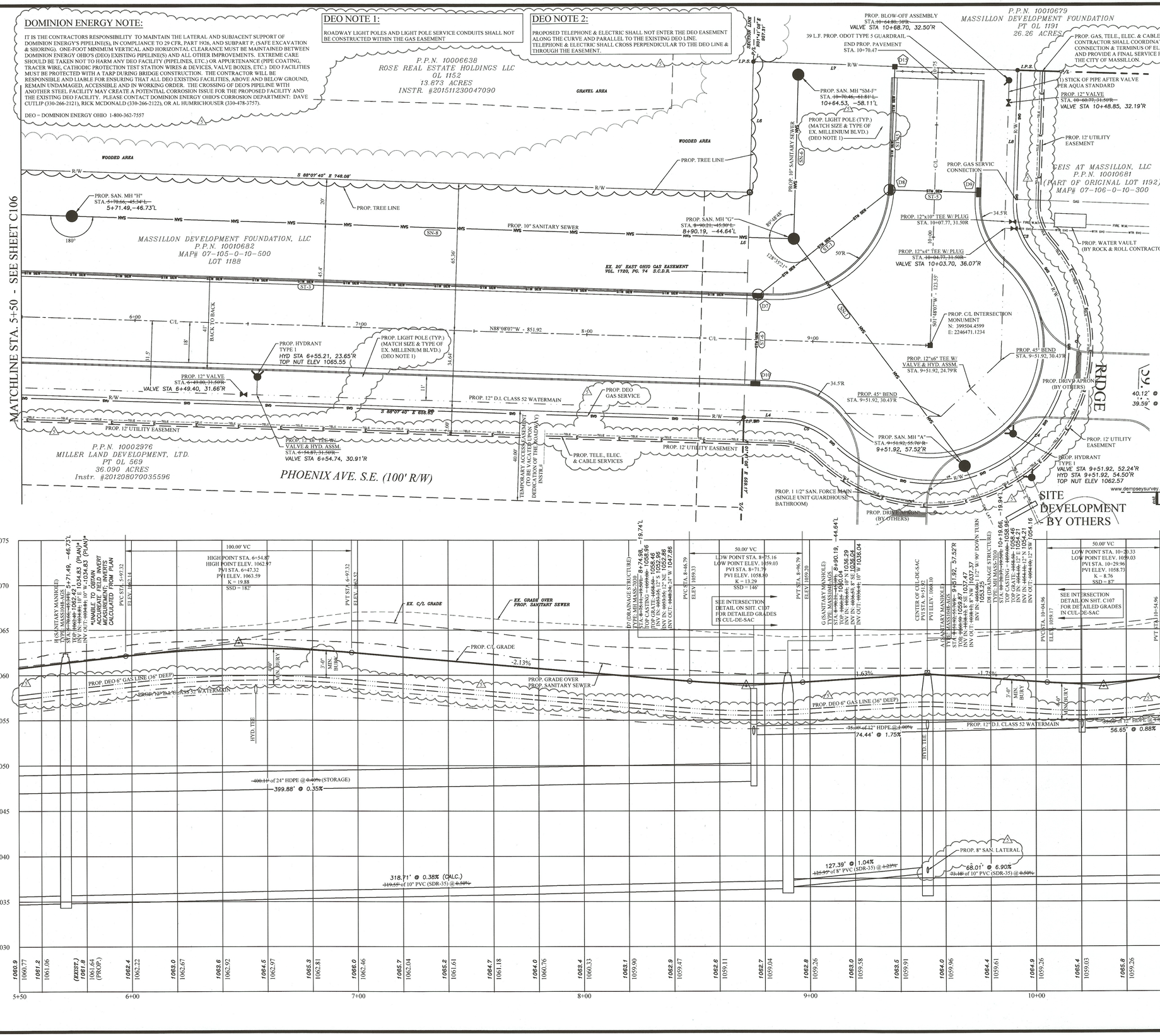

SITE BENCH MARK

BENCH MARK #1
TOP NUT ON HYDRANT
(SEE SHEET C106)

ELEVATION = 1053.73

NOTE 1:

CONTRACTOR SHALL DEFLECT W.M. AS NECESSARY TO MAINTAIN 18" MIN. VERTICAL CLEARANCE BETWEEN W.M. & SAN. SEW. AND/OR STM. SEW. AT ALL TIMES. (INSTALL BENDS WHERE NECESSARY)

ITALICS TEXT REPRESENTS EXISTING CONDITION

NON-ITALICS TEXT REPRESENTS PROPOSED CONDITION

CURVE TABLE

CURVE	DELTA	RADIUS	CHORD LENGTH	CHORD BEARING	LENGTH	TANGENT
C3	48°06'01"	95.00'	85.66'	S 19°25'15" E	26.17'	13.73'
C4	170°28'08"	60.00'	119.91'	S 46°55'49" W	183.75'	1518.54'
C5	48°47'52"	95.00'	25.54'	N 68°43'54" W	26.14'	13.71'

LINE TABLE

LINE	LENGTH	BEARING
L4	16.92'	N 88°07'40" W
L5	100.00'	S 01°41'08" W
L6	158.38'	N 01°41'08" E
L7	116.97'	S 88°08'20" E
L8	59.02'	S 02°01'46" W

STORM STRUCTURE TABLE

DRAINAGE STRUCTURE	DETAILS	
D9	TYPE: CB MASS-7030 TOP CASTING = ~~1059.00~~ TOP GRATE = ~~1058.50~~ INV OUT = ~~1054.50~~, 12" W	1058.99 1058.49 1054.39
D10	TYPE: CB MASS-7030 TOP CASTING = ~~1059.00~~ TOP GRATE = ~~1058.50~~ INV OUT = ~~1053.75~~, 12" N	1058.86 1058.36 1053.51

STORM PIPE TABLE

NAME	SIZE	LENGTH	SLOPE	TYPE
ST-5	12"	~~39.00'~~	~~1.03%~~	HDPE
ST-6	12"	~~39.00'~~	~~1.03%~~	HDPE

ALL EXCESS EARTHWORK MATERIALS SHALL BE INCORPORATED INTO THE ROCK & ROLL PROJECT CUT/FILL (DISPLACE ON ROCK & ROLL SITE) IN ACCORDANCE WITH SOILS REPORT.

DEMPSEY / SURVEYING / COMPANY
www.dempseysurvey.com
P 216/226/1130 F 216/226/1131
12815 DETROIT AVENUE
CLEVELAND, OH 44107-2835

AS-BUILT ELEVATIONS AND LOCATIONS AS OBSERVED BY DEMPSEY SURVEYING COMPANY ON AUGUST 14, 2019.

WEBER ENGINEERING SERVICES
Where Strong Relationships & Superior Service Guide Your Project
2555 Hartville Rd., Suite B
Rootstown, OH 44272
www.WeberEngineeringServices.com
330-329-2037
matt@webercivil.com

STATE OF OHIO
MATTHEW E. WEBER
61709
REGISTERED
PROFESSIONAL ENGINEER

Reg. No.: 61709

CLIENT:

GEIS CONSTRUCTION

10020 AURORA-HUDSON RD.
STREETSBORO, OHIO
JEN DOTSON
PHONE: (216) 218-3507

OWNER:

GEIS CONSTRUCTION

10020 AURORA-HUDSON RD.
STREETSBORO, OHIO
JEN DOTSON
PHONE: (216) 218-3507

PROPOSED PHOENIX AVE. S.E.
2018 IMPROVEMENTS
MASSILLON, OHIO

Issue Date
08-31-2018
09-07-2018
09-17-2018
(BID SET)
09-24-2018
△1 10-29-2018
△2 01-18-2019
△3 01-23-2019
△4 02-20-2010
△5 05-10-2019

PLAN AND PROFILE

C103A

Project No. 2018-196RW

19 SD 02

DOMINION ENERGY NOTE:

IT IS THE CONTRACTORS RESPONSIBILITY TO MAINTAIN THE LATERAL AND SUBJACENT SUPPORT OF DOMINION ENERGY'S PIPELINE(S), IN COMPLIANCE TO 29 CFR, PART 1926, AND SUBPART P, (SAFE EXCAVATION & SHORING). ONE-FOOT MINIMUM VERTICAL AND HORIZONTAL CLEARANCE MUST BE MAINTAINED BETWEEN DOMINION ENERGY OHIO'S (DEO) EXISTING PIPELINE(S) AND ALL OTHER IMPROVEMENTS. EXTREME CARE SHOULD BE TAKEN NOT TO HARM ANY DEO FACILITY (PIPELINES, ETC.) OR APPURTENANCE (PIPE COATING, TRACER WIRE, CATHODIC PROTECTION TEST STATION WIRES & DEVICES, VALVE BOXES, ETC.) DEO FACILITIES MUST BE PROTECTED WITH A TARP DURING BRIDGE CONSTRUCTION. THE CONTRACTOR WILL BE RESPONSIBLE AND LIABLE FOR ENSURING THAT ALL DEO EXISTING FACILITIES, ABOVE AND BELOW GROUND, REMAIN UNDAMAGED, ACCESSIBLE AND IN WORKING ORDER. THE CROSSING OF DEO'S PIPELINE WITH ANOTHER STEEL FACILITY MAY CREATE A POTENTIAL CORROSION ISSUE FOR THE PROPOSED FACILITY AND THE EXISTING DEO FACILITY. PLEASE CONTACT DOMINION ENERGY OHIO'S CORROSION DEPARTMENT: DAVE CUTLIP (330-266-2121), RICK MCDONALD (330-266-2122), OR AL HUMRICHOUSER (330-478-3757).

DEO = DOMINION ENERGY OHIO 1-800-362-7557

DEO NOTE 1:

ROADWAY LIGHT POLES AND LIGHT POLE SERVICE CONDUITS SHALL NOT BE CONSTRUCTED WITHIN THE GAS EASEMENT

DEO NOTE 2:

PROPOSED TELEPHONE, ELECTRIC & CABLE SHALL NOT ENTER THE DEO EASEMENT ALONG THE CURVE AND PARALLEL TO THE EXISTING DEO LINE. TELEPHONE & ELECTRIC SHALL CROSS PERPENDICULAR TO THE DEO LINE & THROUGH THE EASEMENT.

DEO NOTE 3:

DEPTH OF EXISTING DEO LINE SHALL BE VERIFIED BY PERFORMING TEST HOLES. RELOCATION OF LINE DUE TO INSUFFICIENT DEPTH WILL BE A BILLABLE EXPENSE TO THE PROJECT. MIN. 12" VERTICAL SEPARATION MUST BE MANTAINED

SITE BENCH MARK

BENCH MARK #1
TOP NUT ON HYDRANT

ELEVATION = 1053.73

NOTE 1:

CONTRACTOR SHALL DEFLECT W.M. AS NECESSARY TO MAINTAIN 18" MIN. VERTICAL CLEARANCE BETWEEN W.M. & SAN. SEW. AND/OR STM. SEW. AT ALL TIMES. (INSTALL BENDS WHERE NECESSARY)

ITALICS TEXT REPRESENTS EXISTING CONDITION

NON-ITALICS TEXT REPRESENTS PROPOSED CONDITION

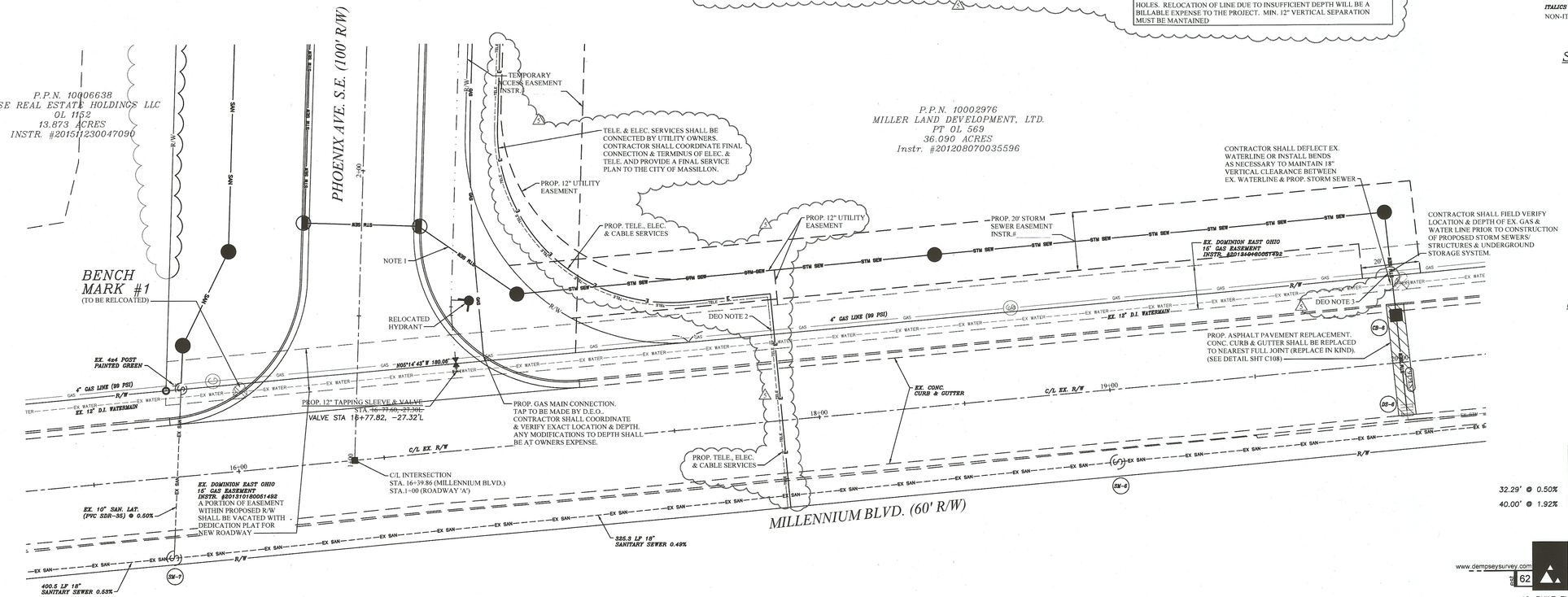

EX. STORM STRUCTURE SCHEDULE

DB-6	CURB INLET BASIN (PROPOSED - TO BE REWORKED) GUTTER RIM=~~1049.00~~ 1047.76; 15" ADS INV. E=~~1042.85~~ (PROP.) 1044.21; 15" ADS INV. W=~~1042.85~~ (PROP.) 1042.76
DB-5	CURB INLET BASIN GUTTER RIM=~~1049.50~~ 1047.64; 15" ADS INV. S=1041.79; 15" ADS INV. E=~~1041.79~~ (PROP.) 1041.99
DB-7	CURB INLET BASIN GUTTER RIM=1044.39; 15" PVC INV. E=1041.14; 12" ADS INV. W=1040.39
DB-7	CURB INLET BASIN GUTTER RIM=1044.34; 12" ADS INV. E=1039.69; 15" ADS INV. N=1039.74
6	15" VCP INV. E=1035.28 (TO BE REMOVED)
DB-6	CURB INLET BASIN GUTTER RIM=1044.10; 15" ADS INV. W=1038.25; 18" ADS INV. S=1038.10; 12" ADS INV. E=1039.40
DB-5	CURB INLET BASIN GUTTER RIM=1044.14; 12" ADS INV. W=1040.04

EX. SANITARY STRUCTURE SCHEDULE

SM-4	SANITARY MANHOLE RIM=1042.38; 18" PVC INV. N&SW=1027.31
SM-6	SANITARY MANHOLE RIM=1045.17; 18" PVC INV. N&S=1028.67
SM-6	SANITARY MANHOLE RIM=1048.20; 18" PVC INV. N&S=1030.67
SM-7	SANITARY MANHOLE RIM=1050.22; 18" PVC INV. S=1032.27; 10" PVC INV. N&E=1032.27
SM-7	SANITARY MANHOLE RIM=1049.10; 10" PVC INV. S&E=1034.38

STORM PIPE TABLE

NAME	SIZE	LENGTH	SLOPE	TYPE
ST-14	15"	~~35.65'~~ 32.29'	~~3.35%~~ 0.50%	HDPE
ST-16	15"	~~33.04'~~ 40.00'	~~3.24%~~ 1.92%	HDPE

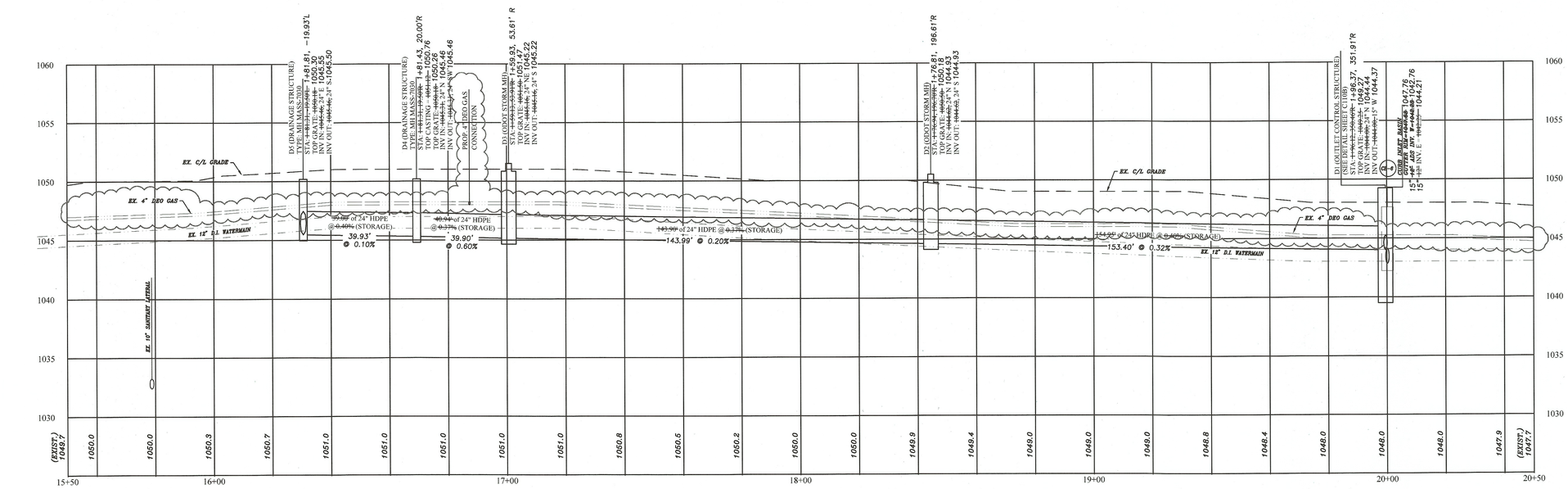

Horizontal Scale: 1" = 20'
Vertical Scale: 1" = 5'

DEMPSEY / SURVEYING / COMPANY
www.dempseysurvey.com
P 216/226/1130 | 12815 DETROIT AVENUE
F 216/226/1131 | CLEVELAND, OH 44107-2835

AS-BUILT ELEVATIONS AND LOCATIONS AS OBSERVED BY DEMPSEY SURVEYING COMPANY ON AUGUST 14, 2019.

WEBER ENGINEERING SERVICES
Where Strong Relationships & Superior Service Guide Your Project
2555 Hartville Rd., Suite B
Rootstown, OH 44272
www.WeberEngineeringServices.com
330-329-2037
matt@webercivil.com

STATE OF OHIO
MATTHEW L. WEBER
61709
REGISTERED
PROFESSIONAL ENGINEER

Reg. No.: 61709

CLIENT:
GEIS CONSTRUCTION
10020 AURORA-HUDSON RD.
STREETSBORO, OHIO
JEN DOTSON
PHONE: (216) 218-3507

OWNER:
GEIS CONSTRUCTION
10020 AURORA-HUDSON RD.
STREETSBORO, OHIO
JEN DOTSON
PHONE: (216) 218-3507

PROPOSED PHOENIX AVE. S.E.
2018 IMPROVEMENTS
MASSILLON, OHIO

Issue Date
08-31-2018
09-07-2018
09-17-2018 (BID SET)
09-24-2018
△1 10-29-2018
△2 01-18-2019
△3 01-23-2019
△4 02-20-2010
△5 05-10-2019

PLAN AND PROFILE

C103B
Project No. 2018-196RW

19 SD 02

W:\9500-9999\0314\2018-196 Sites\IN AS-BUILT.dwg \$1\9/20/19 9:39:26 AM

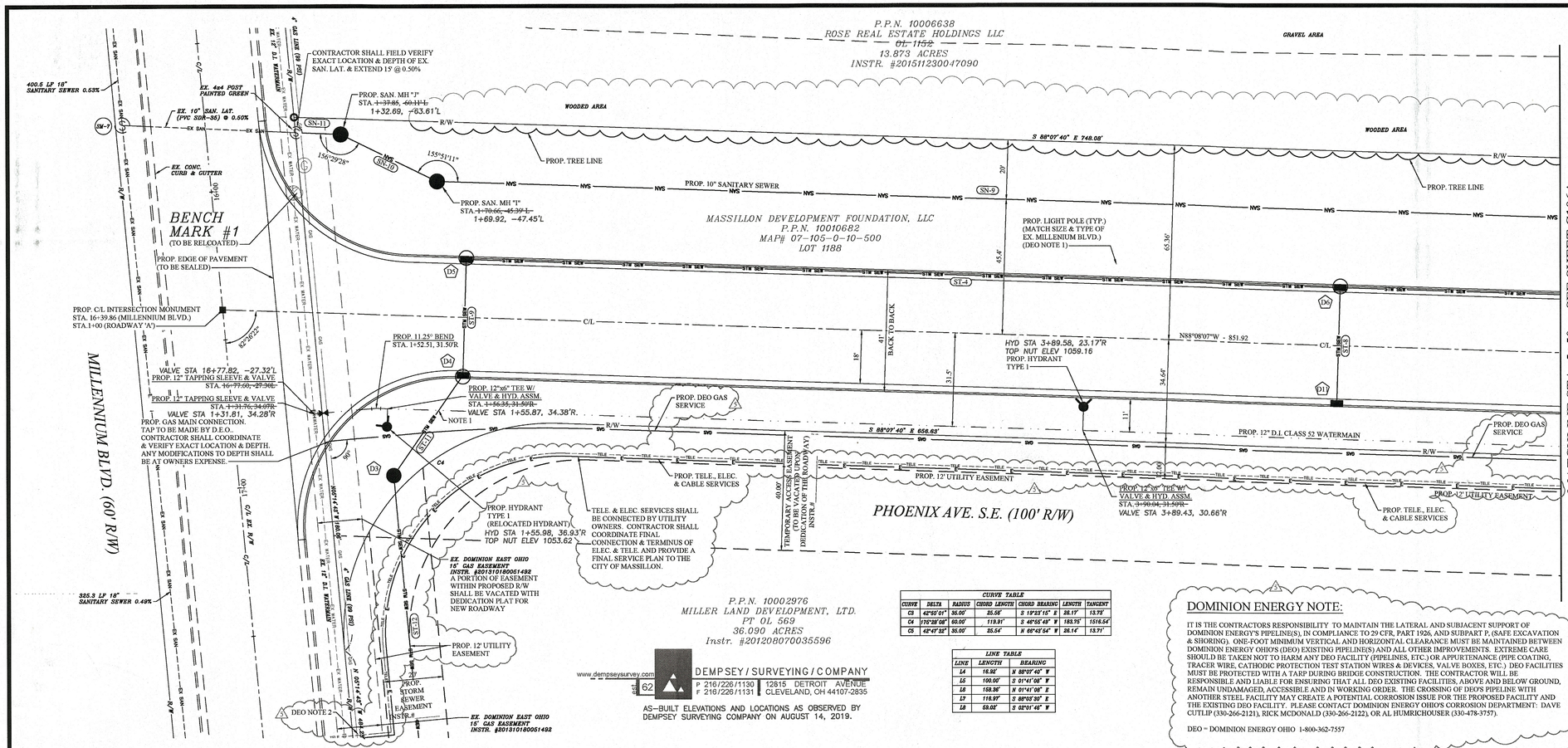

www.dempseysurvey.com

DEMPSEY / SURVEYING / COMPANY

est. 62

P 216/226/1130 F 216/226/1131 | 12815 DETROIT AVENUE CLEVELAND, OH 44107-2835

AS-BUILT ELEVATIONS AND LOCATIONS AS OBSERVED BY DEMPSEY SURVEYING COMPANY ON AUGUST 14, 2019.

CURVE TABLE						
CURVE	DELTA	RADIUS	CHORD LENGTH	CHORD BEARING	LENGTH	TANGENT
C3	42°50'01"	35.00'	25.56'	S 19°23'15" E	26.17'	13.73'
C4	170°28'08"	60.00'	119.91'	S 46°55'49" W	183.75'	1516.54'
C5	42°47'32"	35.00'	25.54'	N 66°45'54" W	26.14'	13.71'

LINE TABLE		
LINE	LENGTH	BEARING
L4	16.92'	N 88°07'40" W
L5	100.00'	S 01°41'08" W
L6	168.36'	N 01°41'08" E
L7	116.97'	S 88°08'08" E
L8	59.08'	S 02°01'46" W

DOMINION ENERGY NOTE:

IT IS THE CONTRACTORS RESPONSIBILITY TO MAINTAIN THE LATERAL AND SUBJACENT SUPPORT OF DOMINION ENERGY'S PIPELINE(S), IN COMPLIANCE TO 29 CFR, PART 1926, AND SUBPART P, (SAFE EXCAVATION & SHORING). ONE-FOOT MINIMUM VERTICAL AND HORIZONTAL CLEARANCE MUST BE MAINTAINED BETWEEN DOMINION ENERGY OHIO'S (DEO) EXISTING PIPELINE(S) AND ALL OTHER IMPROVEMENTS. EXTREME CARE SHOULD BE TAKEN NOT TO HARM ANY DEO FACILITY (PIPELINES, ETC.) OR APPURTENANCE (PIPE COATING, TRACER WIRE, CATHODIC PROTECTION TEST STATION WIRES & DEVICES, VALVE BOXES, ETC.). DEO FACILITIES MUST BE PROTECTED WITH A TARP DURING BRIDGE CONSTRUCTION. THE CONTRACTOR WILL BE RESPONSIBLE AND LIABLE FOR ENSURING THAT ALL DEO EXISTING FACILITIES, ABOVE AND BELOW GROUND, REMAIN UNDAMAGED, ACCESSIBLE AND IN WORKING ORDER. THE CROSSING OF DEO'S PIPELINE WITH ANOTHER STEEL FACILITY MAY CREATE A POTENTIAL CORROSION ISSUE FOR THE PROPOSED FACILITY AND THE EXISTING DEO FACILITY. PLEASE CONTACT DOMINION ENERGY OHIO'S CORROSION DEPARTMENT: DAVE CUTLIP (330-266-2121), RICK MCDONALD (330-266-2122), OR AL HUMRICHOUSER (330-478-3757).

DEO = DOMINION ENERGY OHIO 1-800-362-7557

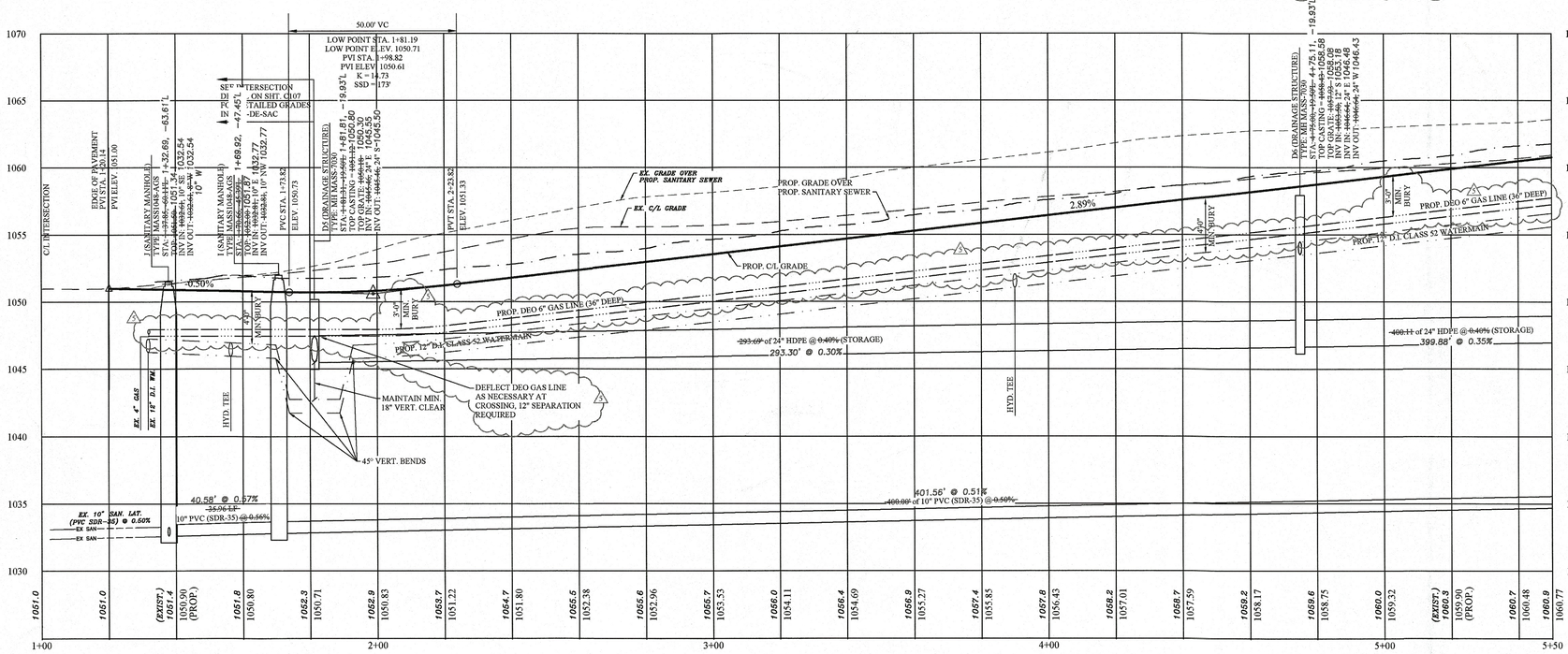

SITE BENCH MARK

BENCH MARK #1
TOP NUT ON HYDRANT

ELEVATION = 1053.73

NOTE 1:

CONTRACTOR SHALL DEFLECT W.M. AS NECESSARY TO MAINTAIN 18" MIN. VERTICAL CLEARANCE BETWEEN W.M. & SAN. SEW. AND/OR STM. SEW. AT ALL TIMES. (INSTALL BENDS WHERE NECESSARY)

ITALICS TEXT REPRESENTS EXISTING CONDITION

NON-ITALICS TEXT REPRESENTS PROPOSED CONDITION

EX. STORM STRUCTURE SCHEDULE

- CB-6: CURB INLET BASIN, GUTTER RIM=1047.63, 12" ADS INV. W=1042.23
- CB-8: CURB INLET BASIN, GUTTER RIM=1047.58, 12" ADS INV. E=1041.96, 12" ADS INV. S=1041.78
- CB-7: CURB INLET BASIN, GUTTER RIM=1044.89, 10" PVC INV. E=1041.14, 12" ADS INV. W=1040.39
- DS-7: CURB INLET BASIN, GUTTER RIM=1044.84, 12" ADS INV. E=1039.89, 15" ADS INV. N=1039.74
- 5: 12" YCP INV. S=1035.28 (TO BE REMOVED)
- DS-6: CURB INLET BASIN, GUTTER RIM=1044.10, 15" ADS INV. N=1038.25, 18" ADS INV. S=1038.10, 12" ADS INV. E=1039.40
- CB-5: CURB INLET BASIN, GUTTER RIM=1044.14, 12" ADS INV. W=1040.04

EX. SANITARY STRUCTURE SCHEDULE

- SM-4: SANITARY MANHOLE, RIM=1048.38, 18" PVC INV. N&S=1037.31
- SM-6: SANITARY MANHOLE, RIM=1045.17, 18" PVC INV. N&S=1038.67
- SM-9: SANITARY MANHOLE, RIM=1049.20, 18" PVC INV. N&S=1030.67
- SM-7: SANITARY MANHOLE, RIM=1050.32, 18" PVC INV. S=1032.27, 10" PVC INV. N&E=1032.27
- SM-7: SANITARY MANHOLE, RIM=1048.10, 10" PVC INV. S&E=1034.38

STORM STRUCTURE TABLE	
DRAINAGE STRUCTURE	DETAILS
D11	TYPE: CB MASS-7030 TOP CASTING = ~~1058.43~~ 1058.57 TOP GRATE = ~~1057.93~~ 1058.07 INV OUT = ~~1053.00~~ 12" N 1053.62

STORM PIPE TABLE				
NAME	SIZE	LENGTH	SLOPE	TYPE
ST-8	12"	~~39.00'~~ 39.82'	~~1.03%~~ @ 1.11%	HDPE

ALL EXCESS EARTHWORK MATERIALS SHALL BE INCORPORATED INTO THE ROCK & ROLL PROJECT CUT/FILL (DISPLACE ON ROCK & ROLL SITE) IN ACCORDANCE WITH SOILS REPORT.

DEO NOTE 1:

ROADWAY LIGHT POLES AND LIGHT POLE SERVICE CONDUITS SHALL NOT BE CONSTRUCTED WITHIN THE GAS EASEMENT

DEO NOTE 2:

PROPOSED TELEPHONE & ELECTRIC SHALL NOT ENTER THE DEO EASEMENT ALONG THE CURVE AND PARALLEL TO THE EXISTING DEO LINE. TELEPHONE & ELECTRIC SHALL CROSS PERPENDICULAR TO THE DEO LINE & THROUGH THE EASEMENT.

N

Horizontal Scale: 1" = 20'
Vertical Scale: 1" = 5'

WEBER ENGINEERING SERVICES
Where Strong Relationships & Superior Service Guide Your Project
2555 Hartville Rd., Suite B
Rootstown, OH 44272
www.WeberEngineeringServices.com
330-329-2037
matt@webercivil.com

STATE OF OHIO — MATTHEW L. WEBER — 61709 — REGISTERED — PROFESSIONAL ENGINEER

Reg. No.: 61709

CLIENT:
GEIS CONSTRUCTION
10020 AURORA-HUDSON RD.
STREETSBORO, OHIO
JEN DOTSON
PHONE: (216) 218-3507

OWNER:
GEIS CONSTRUCTION
10020 AURORA-HUDSON RD.
STREETSBORO, OHIO
JEN DOTSON
PHONE: (216) 218-3507

PROPOSED PHOENIX AVE. S.E. 2018 IMPROVEMENTS
MASSILLON, OHIO

Issue Date
08-31-2018
09-07-2018
09-17-2018
(BID SET)
09-24-2018
△1 10-29-2018
△2 01-18-2019
△3 01-23-2019
△4 02-20-2010
△5 05-10-2019

PLAN AND PROFILE

C103

Project No. 2018-196RW

19SD02

W:\0300-0999\0914\2018-196 Stato\IN AS-BUILT.dwg 8/15/2019 10:41:06 AM

DOMINION ENERGY NOTE:

IT IS THE CONTRACTORS RESPONSIBILITY TO MAINTAIN THE LATERAL AND SUBJACENT SUPPORT OF DOMINION ENERGY'S PIPELINE(S), IN COMPLIANCE TO 29 CFR, PART 1926, AND SUBPART P, (SAFE EXCAVATION & SHORING). ONE-FOOT MINIMUM VERTICAL AND HORIZONTAL CLEARANCE MUST BE MAINTAINED BETWEEN DOMINION ENERGY OHIO'S (DEO) EXISTING PIPELINE(S) AND ALL OTHER IMPROVEMENTS. EXTREME CARE SHOULD BE TAKEN NOT TO HARM ANY DEO FACILITY (PIPELINES, ETC.) OR APPURTENANCE (PIPE COATING, TRACER WIRE, CATHODIC PROTECTION TEST STATION WIRES & DEVICES, VALVE BOXES, ETC.) DEO FACILITIES MUST BE PROTECTED WITH A TARP DURING BRIDGE CONSTRUCTION. THE CONTRACTOR WILL BE RESPONSIBLE AND LIABLE FOR ENSURING THAT ALL DEO EXISTING FACILITIES, ABOVE AND BELOW GROUND, REMAIN UNDAMAGED, ACCESSIBLE AND IN WORKING ORDER. THE CROSSING OF DEO'S PIPELINE WITH ANOTHER STEEL FACILITY MAY CREATE A POTENTIAL CORROSION ISSUE FOR THE PROPOSED FACILITY AND THE EXISTING DEO FACILITY. PLEASE CONTACT DOMINION ENERGY OHIO'S CORROSION DEPARTMENT: DAVE CUTLIP (330-266-2121), RICK MCDONALD (330-266-2122), OR AL HUMRICHOUSER (330-478-3757).

DEO = DOMINION ENERGY OHIO 1-800-362-7557

DEO NOTE 1:

ROADWAY LIGHT POLES AND LIGHT POLE SERVICE CONDUITS SHALL NOT BE CONSTRUCTED WITHIN THE GAS EASEMENT

DEO NOTE 2:

PROPOSED TELEPHONE & ELECTRIC SHALL NOT ENTER THE DEO EASEMENT ALONG THE CURVE AND PARALLEL TO THE EXISTING DEO LINE. TELEPHONE & ELECTRIC SHALL CROSS PERPENDICULAR TO THE DEO LINE & THROUGH THE EASEMENT.

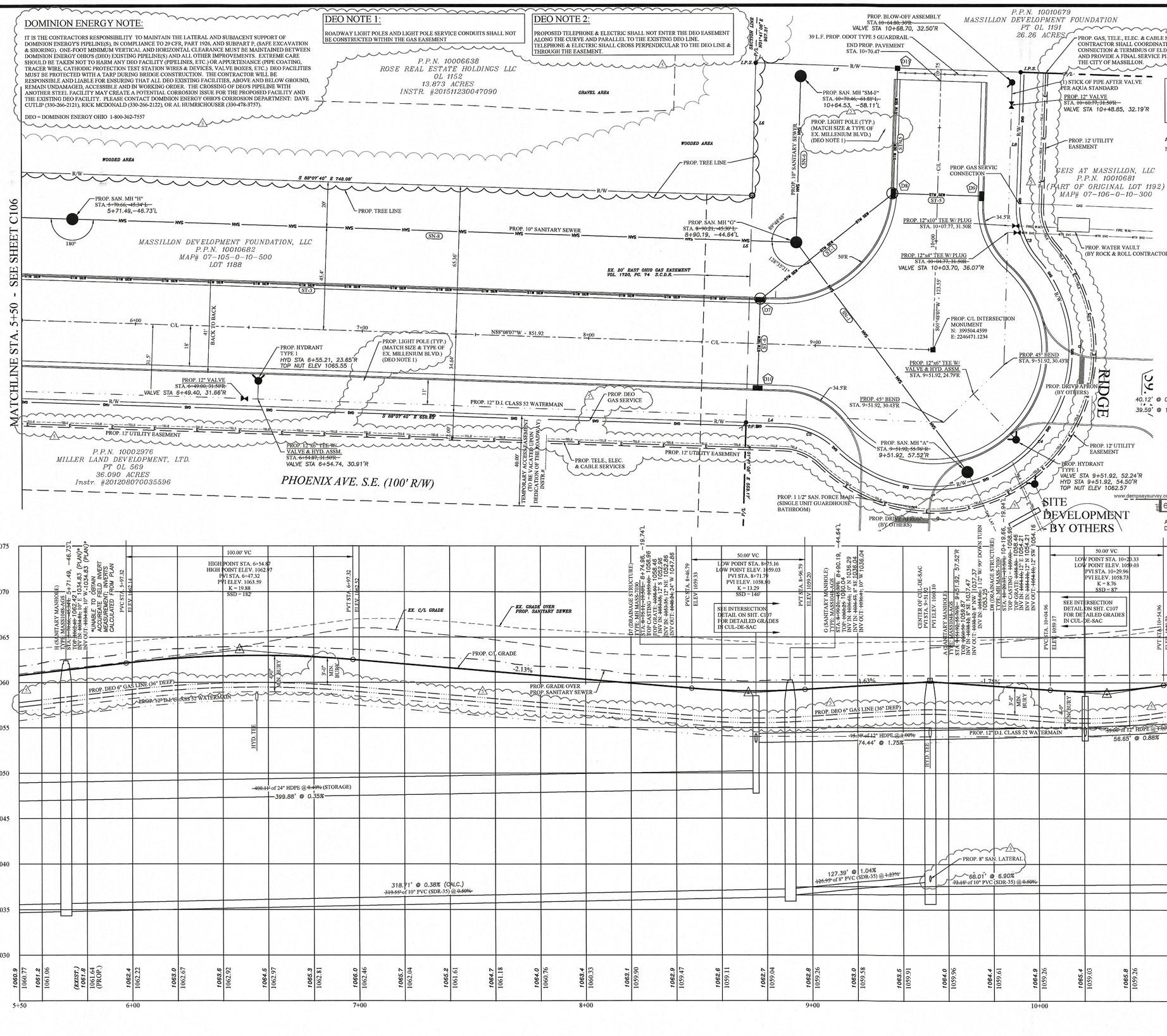

NOTE 1:

CONTRACTOR SHALL DEFLECT W.M. AS NECESSARY TO MAINTAIN 18" MIN. VERTICAL CLEARANCE BETWEEN W.M. & SAN. SEW. AND/OR STM. SEW. AT ALL TIMES. (INSTALL BENDS WHERE NECESSARY)

ITALICS TEXT REPRESENTS EXISTING CONDITION

NON-ITALICS TEXT REPRESENTS PROPOSED CONDITION

CURVE TABLE

CURVE	DELTA	RADIUS	CHORD LENGTH	CHORD BEARING	LENGTH	TANGENT
C3	42°05'01"	35.00'	25.55'	S 19°23'15" E	26.17'	13.73'
C4	170°28'08"	60.00'	119.91'	S 40°55'49" W	180.75'	1016.54'
C5	42°47'52"	35.00'	25.54'	N 68°45'54" W	26.14'	13.71'

LINE TABLE

LINE	LENGTH	BEARING
L4	16.92'	N 88°07'40" W
L5	100.00'	S 01°41'08" W
L6	168.26'	N 01°41'08" E
L7	116.99'	S 88°03'00" E
L8	59.02'	S 88°01'46" W

STORM STRUCTURE TABLE

DRAINAGE STRUCTURE	DETAILS	
D9	TYPE: CB MASS-7030 TOP CASTING = ~~1059.00~~ TOP GRATE = ~~1058.50~~ INV OUT = ~~1054.50~~, 12" W	1058.99 1058.49 1054.39
D10	TYPE: CB MASS-7030 TOP CASTING = ~~1059.00~~ TOP GRATE = ~~1058.50~~ INV OUT = ~~1053.75~~, 12" N	1058.86 1058.36 1053.51

STORM PIPE TABLE

NAME	SIZE	LENGTH	SLOPE	TYPE
ST-5	12"	~~39.00'~~	~~1.03%~~	HDPE
ST-6	12"	~~39.00'~~	~~1.03%~~	HDPE

40.12' @ 0.45%

39.59' @ 1.39%

ALL EXCESS EARTHWORK MATERIALS SHALL BE INCORPORATED INTO THE ROCK & ROLL PROJECT CUT/FILL (DISPLACE ON ROCK & ROLL SITE) IN ACCORDANCE WITH SOILS REPORT.

DEMPSEY / SURVEYING / COMPANY
www.dempseysurvey.com
P 216/226/1130 F 216/226/1131
12815 DETROIT AVENUE CLEVELAND, OH 44107-2835

AS-BUILT ELEVATIONS AND LOCATIONS AS OBSERVED BY DEMPSEY SURVEYING COMPANY ON AUGUST 14, 2019.

Horizontal Scale: 1" = 20'
Vertical Scale: 1" = 5'

SITE BENCH MARK

BENCH MARK #1
TOP NUT ON HYDRANT
(SEE SHEET C106)

ELEVATION = 1053.73

WEBER ENGINEERING SERVICES
Where Strong Relationships & Superior Service Guide Your Project
2555 Hartville Rd., Suite B
Rootstown, OH 44272
www.WeberEngineeringServices.com
330-329-2037
matt@webercivil.com

STATE OF OHIO
MATTHEW L. WEBER
61709
REGISTERED
PROFESSIONAL ENGINEER

Reg. No.: 61709

CLIENT:

GEIS CONSTRUCTION

10020 AURORA-HUDSON RD.
STREETSBORO, OHIO
JEN DOTSON
PHONE: (216) 218-3507

OWNER:

GEIS CONSTRUCTION

10020 AURORA-HUDSON RD.
STREETSBORO, OHIO
JEN DOTSON
PHONE: (216) 218-3507

Issue Date
08-31-2018
09-07-2018
09-17-2018
(BID SET)
09-24-2018
△1 10-29-2018
△2 01-18-2019
△3 01-23-2019
△4 02-20-2010
△5 05-10-2019

PROPOSED PHOENIX AVE. S.E.
2018 IMPROVEMENTS
MASSILLON, OHIO

PLAN AND PROFILE

C103A

Project No. 2018-196RW

19 SD 02

W:\2000\2019\73142019-196 Sheet\N AS-BUILT.dwg 8/15/2019 10:41:16 AM

DOMINION ENERGY NOTE:

IT IS THE CONTRACTORS RESPONSIBILITY TO MAINTAIN THE LATERAL AND SUBJACENT SUPPORT OF DOMINION ENERGY'S PIPELINE(S), IN COMPLIANCE TO 29 CFR, PART 1926, AND SUBPART P, (SAFE EXCAVATION & SHORING). ONE-FOOT MINIMUM VERTICAL AND HORIZONTAL CLEARANCE MUST BE MAINTAINED BETWEEN DOMINION ENERGY OHIO'S (DEO) EXISTING PIPELINE(S) AND ALL OTHER IMPROVEMENTS. EXTREME CARE SHOULD BE TAKEN NOT TO HARM ANY DEO FACILITY (PIPELINES, ETC.) OR APPURTENANCE (PIPE COATING, TRACER WIRE, CATHODIC PROTECTION TEST STATION WIRES & DEVICES, VALVE BOXES, ETC.) DEO FACILITIES MUST BE PROTECTED WITH A TARP DURING BRIDGE CONSTRUCTION. THE CONTRACTOR WILL BE RESPONSIBLE AND LIABLE FOR ENSURING THAT ALL DEO EXISTING FACILITIES, ABOVE AND BELOW GROUND, REMAIN UNDAMAGED, ACCESSIBLE AND IN WORKING ORDER. THE CROSSING OF DEO'S PIPELINE WITH ANOTHER STEEL FACILITY MAY CREATE A POTENTIAL CORROSION ISSUE FOR THE PROPOSED FACILITY AND THE EXISTING DEO FACILITY. PLEASE CONTACT DOMINION ENERGY OHIO'S CORROSION DEPARTMENT: DAVE CUTLIP (330-266-2121), RICK MCDONALD (330-266-2122), OR AL HUMRICHOUSER (330-478-3757).

DEO = DOMINION ENERGY OHIO 1-800-362-7557

DEO NOTE 1:

ROADWAY LIGHT POLES AND LIGHT POLE SERVICE CONDUITS SHALL NOT BE CONSTRUCTED WITHIN THE GAS EASEMENT

DEO NOTE 2:

PROPOSED TELEPHONE, ELECTRIC & CABLE SHALL NOT ENTER THE DEO EASEMENT ALONG THE CURVE AND PARALLEL TO THE EXISTING DEO LINE. TELEPHONE & ELECTRIC SHALL CROSS PERPENDICULAR TO THE DEO LINE & THROUGH THE EASEMENT.

DEO NOTE 3:

DEPTH OF EXISTING DEO LINE SHALL BE VERIFIED BY PERFORMING TEST HOLES. RELOCATION OF LINE DUE TO INSUFFICIENT DEPTH WILL BE A BILLABLE EXPENSE TO THE PROJECT. MIN. 12" VERTICAL SEPARATION MUST BE MANTAINED

SITE BENCH MARK

BENCH MARK #1
TOP NUT ON HYDRANT

ELEVATION = 1053.73

NOTE 1:

CONTRACTOR SHALL DEFLECT W.M. AS NECESSARY TO MAINTAIN 18" MIN. VERTICAL CLEARANCE BETWEEN W.M. & SAN. SEW. AND/OR STM. SEW. AT ALL TIMES. (INSTALL BENDS WHERE NECESSARY)

ITALICS TEXT REPRESENTS EXISTING CONDITION
NON-ITALICS TEXT REPRESENTS PROPOSED CONDITION

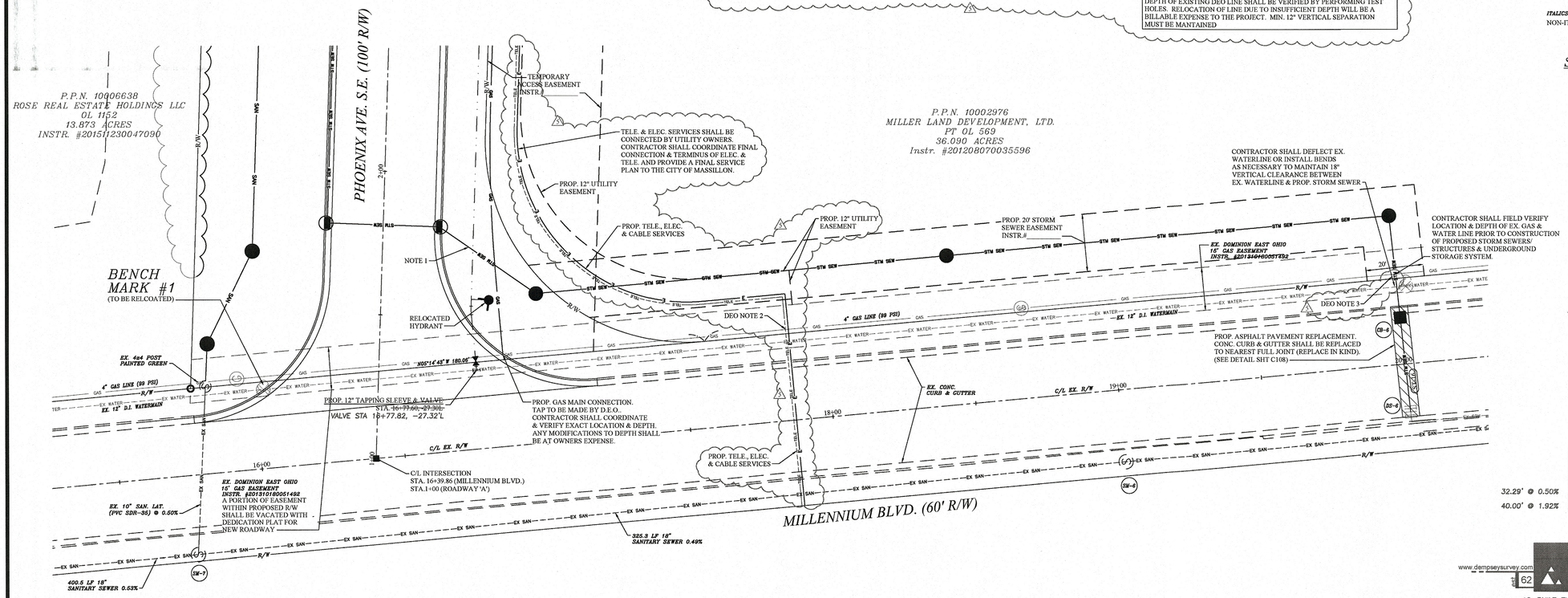

EX. STORM STRUCTURE SCHEDULE

CB-6	CURB INLET BASIN (PROPOSED - TO BE REWORKED) GUTTER RIM=~~1049.88~~ 1047.76 15" ADS INV. E=~~1042.85~~ (PROP.) 1044.21 15" ADS INV. W=~~1042.85~~ (PROP.) 1042.76
DG-6	CURB INLET BASIN GUTTER RIM=~~1049.88~~ 1047.64 15" ADS INV. S=1041.78 15" ADS INV. E=~~1041.78~~ (PROP.) 1041.99
CB-7	CURB INLET BASIN GUTTER RIM=1044.39 10" PVC INV. E=1041.14 12" ADS INV. W=1040.39
DG-7	CURB INLET BASIN GUTTER RIM=1044.34 12" ADS INV. S=1039.89 15" ADS INV. N=1039.74
G	12" VCP INV. E=1035.28 (TO BE REMOVED)
DG-5	CURB INLET BASIN GUTTER RIM=1044.10 15" ADS INV. N=1038.25 18" ADS INV. S=1038.10 12" ADS INV. E=1039.40
CB-5	CURB INLET BASIN GUTTER RIM=1044.14 12" ADS INV. W=1040.04

EX. SANITARY STRUCTURE SCHEDULE

SM-4	SANITARY MANHOLE RIM=1042.38 18" PVC INV. N&SW=1027.31
SM-5	SANITARY MANHOLE RIM=1045.17 18" PVC INV. N&S=1038.67
SM-6	SANITARY MANHOLE RIM=1049.20 18" PVC INV. N&S=1030.67
SM-7	SANITARY MANHOLE RIM=1050.22 18" PVC INV. S=1032.27 10" PVC INV. N&E=1032.27
SM-8	SANITARY MANHOLE RIM=1045.10 10" PVC INV. S&E=1034.38

STORM PIPE TABLE

NAME	SIZE	LENGTH	SLOPE	TYPE
ST-14	15"	~~35.65'~~ 32.29'	~~-3.23%~~ @ 0.50%	HDPE
ST-16	15"	~~33.04'~~ 40.00'	~~-3.24%~~ @ 1.92%	HDPE

DEMPSEY / SURVEYING / COMPANY
www.dempseysurvey.com
P 216/226/1130 F 216/226/1131
12815 DETROIT AVENUE CLEVELAND, OH 44107-2835

AS-BUILT ELEVATIONS AND LOCATIONS AS OBSERVED BY DEMPSEY SURVEYING COMPANY ON AUGUST 14, 2019.

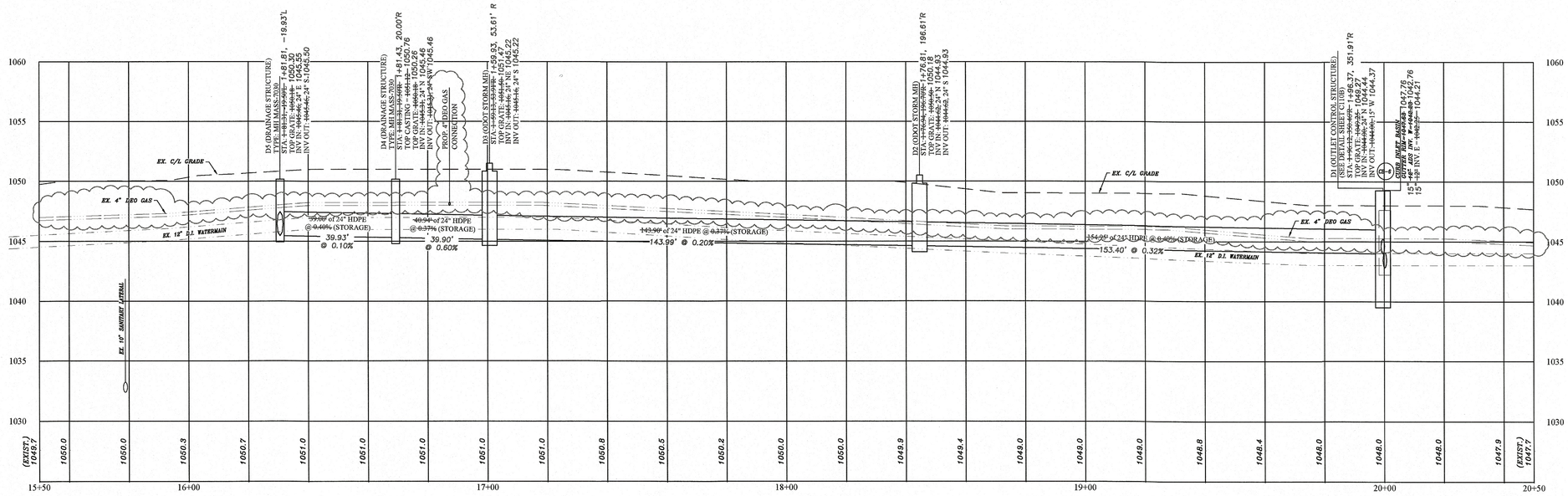

Horizontal Scale: 1" = 20'
Vertical Scale: 1" = 5'

WEBER ENGINEERING SERVICES
Where Strong Relationships & Superior Service Guide Your Project
2555 Hartville Rd., Suite B
Rootstown, OH 44272
www.WeberEngineeringServices.com
330-329-2037
matt@webercivil.com

STATE OF OHIO
MATTHEW L. WEBER
61709
REGISTERED
PROFESSIONAL ENGINEER

Reg. No.: 61709

CLIENT:
GEIS CONSTRUCTION
10020 AURORA-HUDSON RD.
STREETSBORO, OHIO
JEN DOTSON
PHONE: (216) 218-3507

OWNER:
GEIS CONSTRUCTION
10020 AURORA-HUDSON RD.
STREETSBORO, OHIO
JEN DOTSON
PHONE: (216) 218-3507

PROPOSED PHOENIX AVE. S.E.
2018 IMPROVEMENTS
MASSILLON, OHIO

Issue Date
08-31-2018
09-07-2018
09-17-2018
(BID SET)
09-24-2018
△1 10-29-2018
△2 01-18-2019
△3 01-23-2019
△4 02-20-2010
△5 05-10-2019

PLAN AND PROFILE

C103B
Project No. 2018-196RW

19 SD 02

W:\9000-9999\194\2018-196 Sites\01N AS-BUILT.dwg 8/15/2019 10:41:28 AM

SITE BENCH MARK
BENCH MARK #1 TOP NUT ON HYDRANT
ELEVATION = 1053.73

LEGEND

ITALICS TEXT REPRESENTS EXISTING CONDITION

NON-ITALICS TEXT REPRESENTS PROPOSED CONDITION

ALL EXCESS EARTHWORK MATERIALS SHALL BE INCORPORATED INTO THE ROCK & ROLL PROJECT CUT/FILL (DISPLACE ON ROCK & ROLL SITE) IN ACCORDANCE WITH SOILS REPORT.

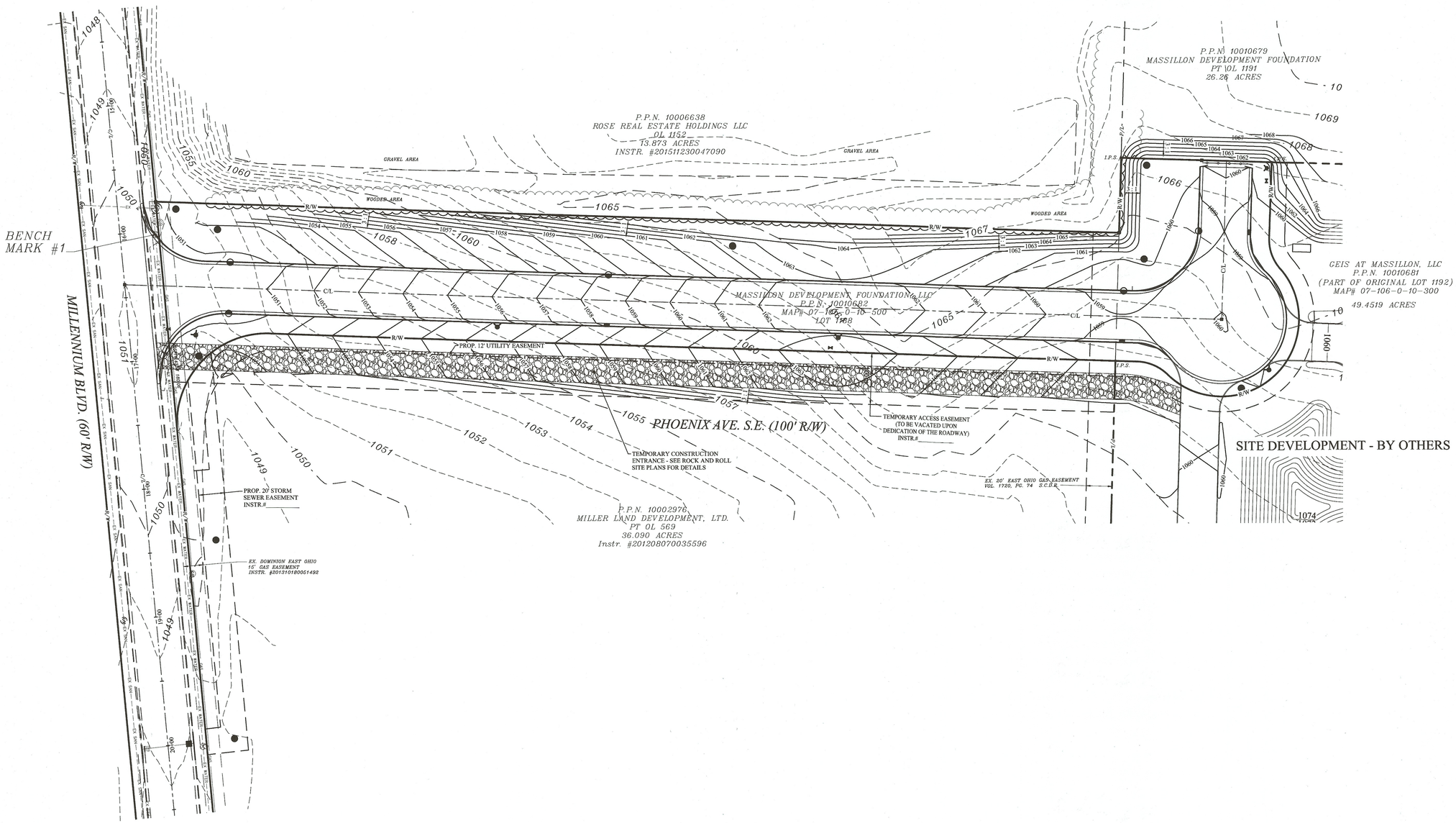

OHIO Utilities Protection SERVICE
Call Before You Dig
800-362-2764 or 8-1-1
www.oups.org

OGPUPS
Ohio Oil & Gas Producers Underground Protection Service
800-925-0988 or 8-1-1
www.ogpups.org

N

Scale: 1" = 40'

WEBER ENGINEERING SERVICES
Where Strong Relationships & Superior Service Guide Your Project

2555 Hartville Rd., Suite B
Rootstown, OH 44272
www.WeberEngineeringServices.com
330-329-2037
matt@webercivil.com

STATE OF OHIO
MATTHEW L. WEBER
61709
REGISTERED
PROFESSIONAL ENGINEER

Reg. No.: 61709

CLIENT:

GEIS CONSTRUCTION

10020 AURORA-HUDSON RD.
STREETSBORO, OHIO
JEN DOTSON
PHONE: (216) 218-3507

OWNER:

GEIS CONSTRUCTION

10020 AURORA-HUDSON RD.
STREETSBORO, OHIO
JEN DOTSON
PHONE: (216) 218-3507

PROPOSED PHOENIX AVE. S.E.
2018 IMPROVEMENTS
MASSILLON, OHIO

Issue Date
08-31-2018
09-07-2018
09-17-2018 (BID SET)
09-24-2018
△1 10-29-2018
△2 01-18-2019
△3 01-23-2019
△4 02-20-2010
△5 05-10-2019

GRADING PLAN

C104

Project No. 2018-196RW

19SD02

C:\Related - WORK\Civil 3D Projects\2018\196 Rock & Roll\Dwg\2018-196 Sitedl1N.dwg 5/10/2019 4:19:25 PM

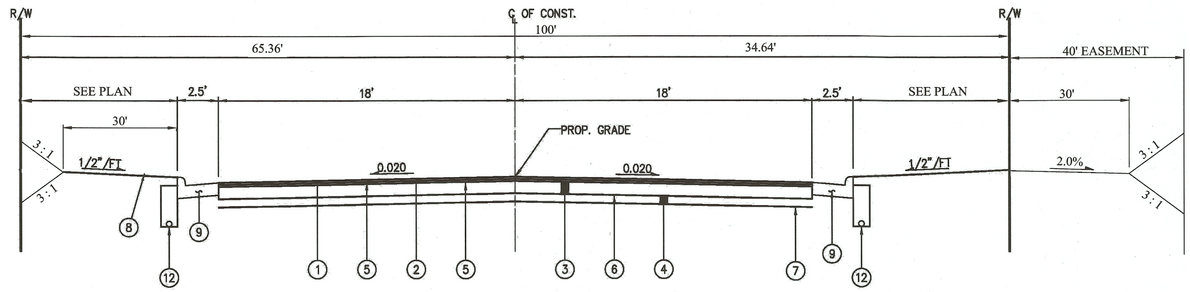

ROADWAY "A" TYPICAL SECTION
STA. 1+81.19 TO STA. 10+70.47

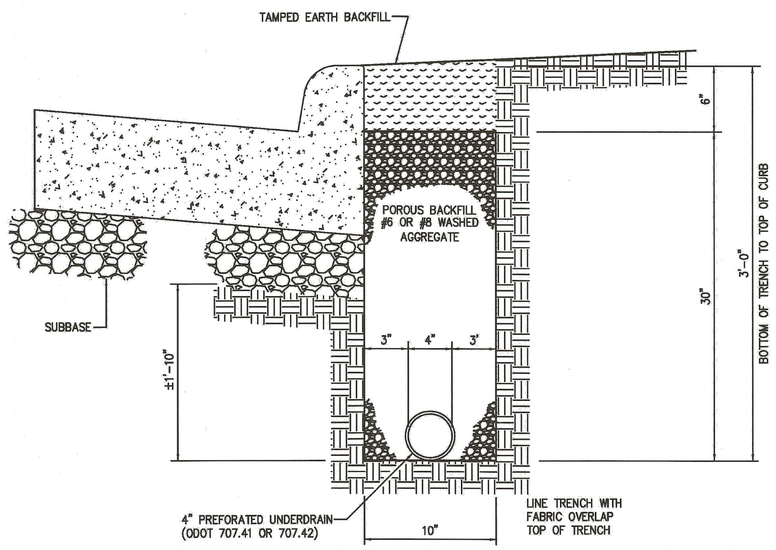

ITEM 605-4" SHALLOW PIPE UNDERDRAINS

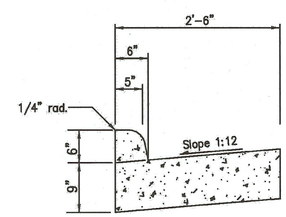

ITEM 609-CURB, TYPE 2

PROPOSED LEGEND

1. – ITEM 448-1 1/2" ASPHALT CONCRETE SURFACE COURSE, TYPE 1, PG 64-22
2. – ITEM 448-1 1/2" ASPHALT CONCRETE INTERMEDIATE COURSE, TYPE 2, PG 64-22
3. – ITEM 301-9" ASPHALT CONCRETE BASE (2 EQUAL LIFTS)
4. – ITEM 304-6" AGGREGATE BASE
5. – ITEM 407-TACK COAT (0.08 GAL./S.Y.)
6. – ITEM 408-PRIME COAT (0.40 GAL./S.Y.)
7. – ITEM 204-SUBGRADE COMPACTION
8. – ITEM 659-SEEDING AND MULCHING
9. – ITEM 609-CURB, TYPE 2
11. – ITEM 705-HOT APPLIED JOINT SEALER(REQUIRED)
12. – ITEM 605-4" SHALLOW PIPE UNDERDRAINS

WEBER ENGINEERING SERVICES
Where Strong Relationships & Superior Service Guide Your Project
2555 Hartville Rd., Suite B
Rootstown, OH 44272
www.WeberEngineeringServices.com
330-329-2037
matt@webercivil.com

STATE OF OHIO
MATTHEW L. WEBER
61709
REGISTERED
PROFESSIONAL ENGINEER

Reg. No.: 61709

CLIENT:

GEIS CONSTRUCTION

10020 AURORA-HUDSON RD.
STREETSBORO, OHIO
JEN DOTSON
PHONE: (216) 218-3507

OWNER:

GEIS CONSTRUCTION

10020 AURORA-HUDSON RD.
STREETSBORO, OHIO
JEN DOTSON
PHONE: (216) 218-3507

PROPOSED PHOENIX AVE. S.E.
2018 IMPROVEMENTS
MASSILLON, OHIO

Issue Date
08-31-2018
09-07-2018
09-17-2018 (BID SET)
09-24-2018
△1 10-29-2018
△2 01-18-2019
△3 01-23-2019
△4 02-20-2010
△5 05-10-2019

TYPICAL SECTIONS

C105
Project No. 2018-196RW

19 SD 02

C:\Release4 - WORK\Civil 3D Projects 2018\WESS2018-196 Rock & Roll\Dwg\2018-196 Sheet1N.dwg 5/10/2019 4:19:26 PM

2+00.00

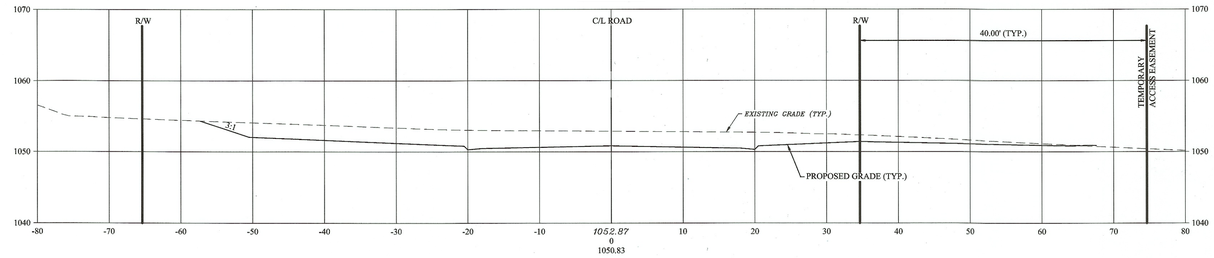

2+50.00

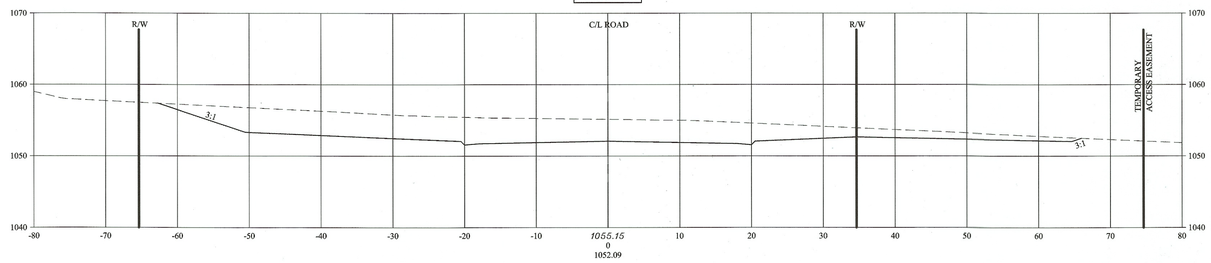

3+00.00

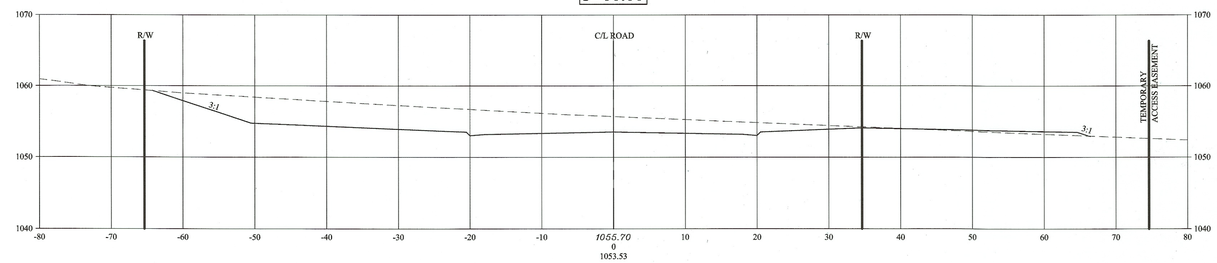

3+50.00

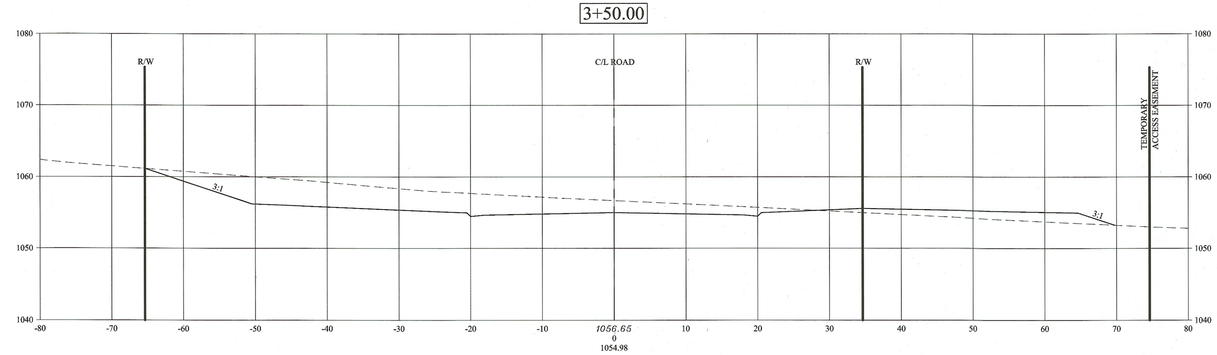

4+00.00

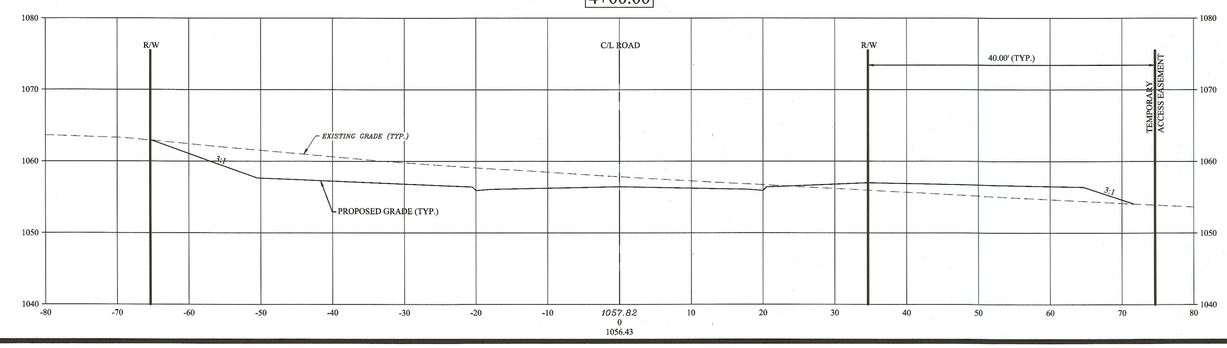

LEGEND

ITALICS TEXT REPRESENTS EXISTING CONDITION
NON-ITALICS TEXT REPRESENTS PROPOSED CONDITION

Horizontal Scale: 1" = 10'
Vertical Scale: 1" = 10'

WEBER ENGINEERING SERVICES
Where Strong Relationships & Superior Service Guide Your Project

2555 Hartville Rd., Suite B
Rootstown, OH 44272
www.WeberEngineeringServices.com
330-329-2037
matt@webercivil.com

STATE OF OHIO
MATTHEW L. WEBER
61709
REGISTERED
PROFESSIONAL ENGINEER

Reg. No.: 61709

CLIENT:

GEIS CONSTRUCTION

10020 AURORA-HUDSON RD.
STREETSBORO, OHIO
JEN DOTSON
PHONE: (216) 218-3507

OWNER:

GEIS CONSTRUCTION

10020 AURORA-HUDSON RD.
STREETSBORO, OHIO
JEN DOTSON
PHONE: (216) 218-3507

PROPOSED PHOENIX AVE. S.E.
2018 IMPROVEMENTS
MASSILLON, OHIO

Issue Date
08-31-2018
09-07-2018
09-17-2018
(BID SET)
09-24-2018
1 10-29-2018
2 01-18-2019
3 01-23-2019
4 02-20-2010
5 05-10-2019

CROSS SECTIONS

C106

Project No. 2018-196RW

19 SD 02

C:\Related - WORK\C\Civil 3D Projects\2018\WES\2018-196 Rock & Roll\Dwg\2018-196 Sheet1N.dwg 5/10/2019 4:19:32 PM

4+50.00

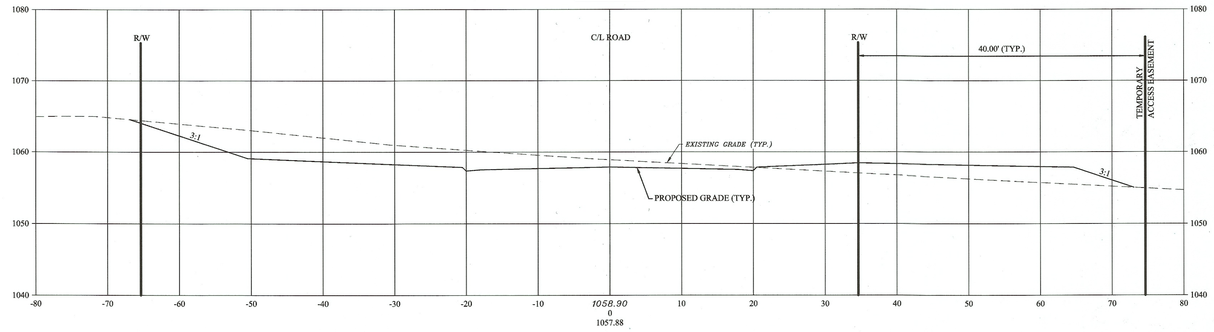

5+00.00

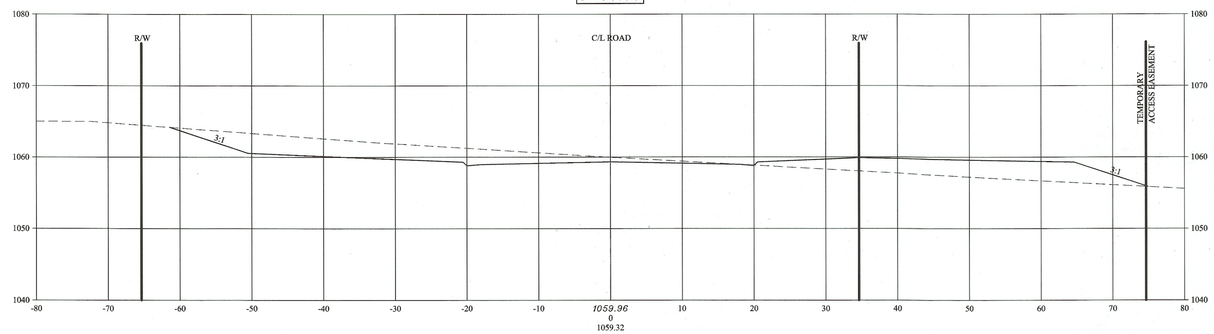

5+50.00

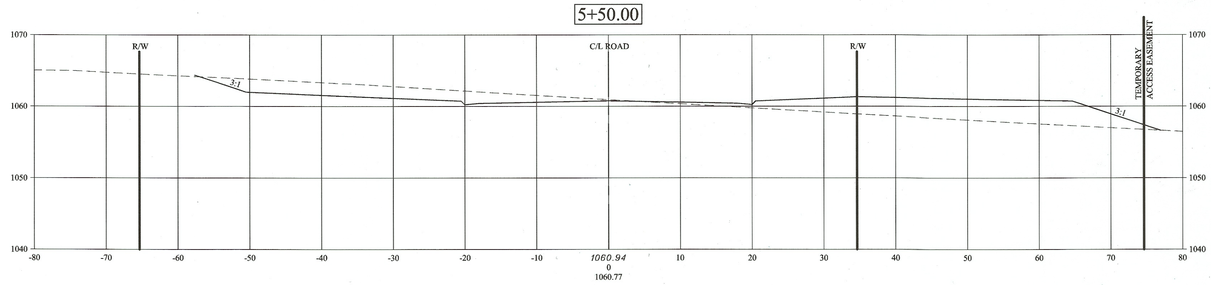

6+00.00

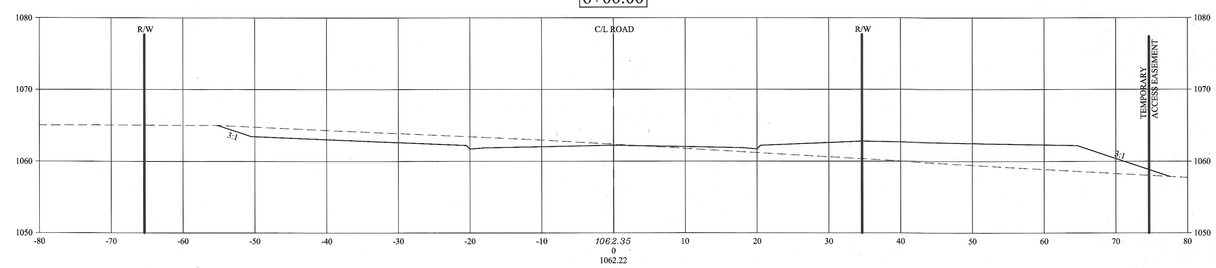

6+50.00

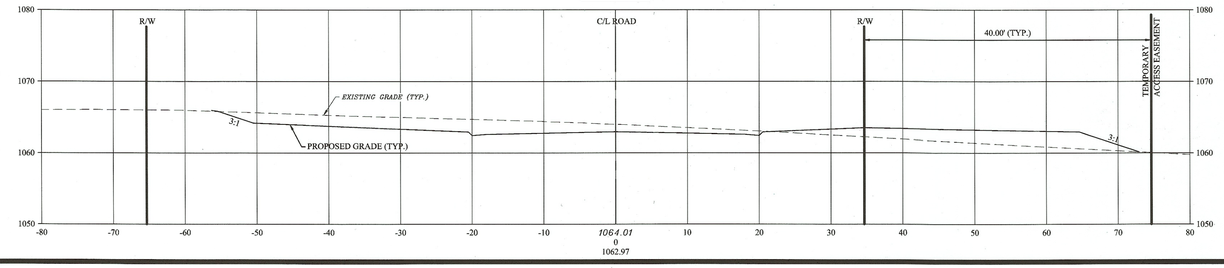

LEGEND

ITALICS TEXT REPRESENTS EXISTING CONDITION
NON-ITALICS TEXT REPRESENTS PROPOSED CONDITION

Horizontal Scale: 1" = 10'
Vertical Scale: 1" = 10'

WEBER ENGINEERING SERVICES
Where Strong Relationships & Superior Service Guide Your Project

2555 Hartville Rd., Suite B
Rootstown, OH 44272
www.WeberEngineeringServices.com
330-329-2037
matt@webercivil.com

STATE OF OHIO
MATTHEW L. WEBER
61709
REGISTERED
PROFESSIONAL ENGINEER

Reg. No.: 61709

CLIENT:

GEIS CONSTRUCTION

10020 AURORA-HUDSON RD.
STREETSBORO, OHIO
JEN DOTSON
PHONE: (216) 218-3507

OWNER:

GEIS CONSTRUCTION

10020 AURORA-HUDSON RD.
STREETSBORO, OHIO
JEN DOTSON
PHONE: (216) 218-3507

PROPOSED PHOENIX AVE. S.E.
2018 IMPROVEMENTS
MASSILLON, OHIO

Issue Date
08-31-2018
09-07-2018
09-17-2018 (BID SET)
09-24-2018
1 10-29-2018
2 01-18-2019
3 01-23-2019
4 02-20-2010
5 05-10-2019

CROSS SECTIONS

C106A
Project No. 2018-196RW

19 SD 02

C:\Projects_WORK\Civil 3D Projects 2018\RWPS\2018-196 Brock & Redfield\Dwg\2018-196 Sheet01N.dwg 5/10/2019 4:19:35 PM

7+00.00

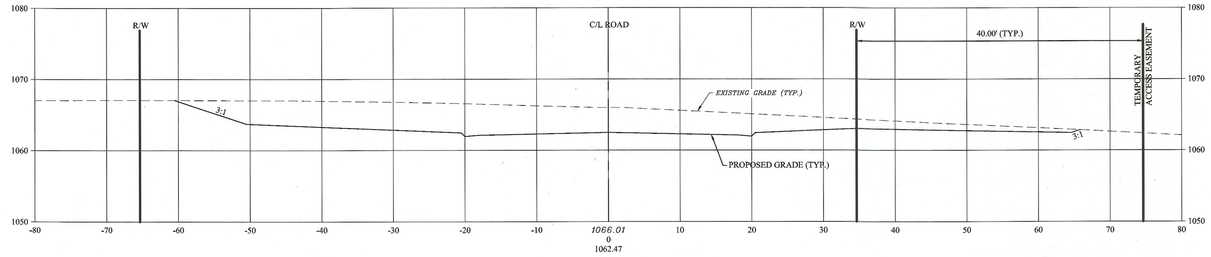

7+50.00

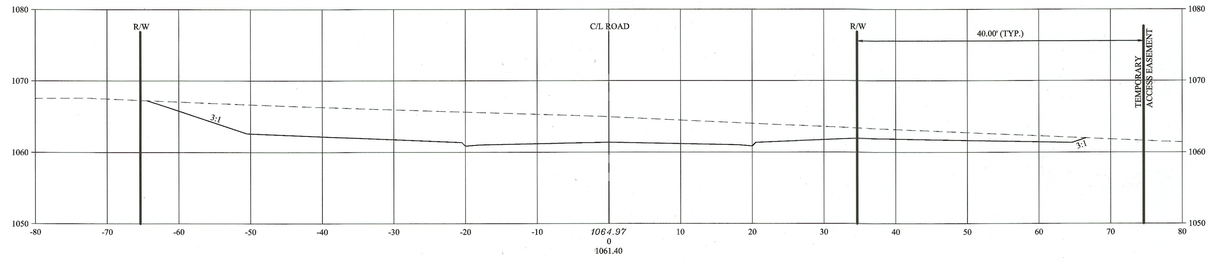

8+00.00

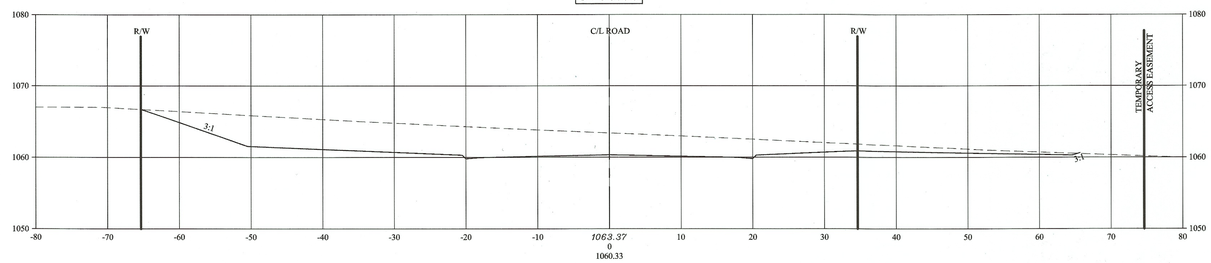

8+50.00

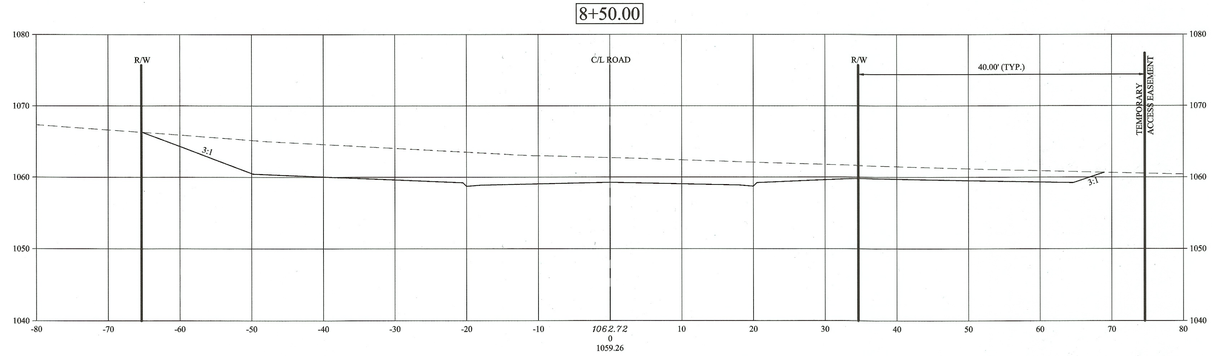

9+00.00

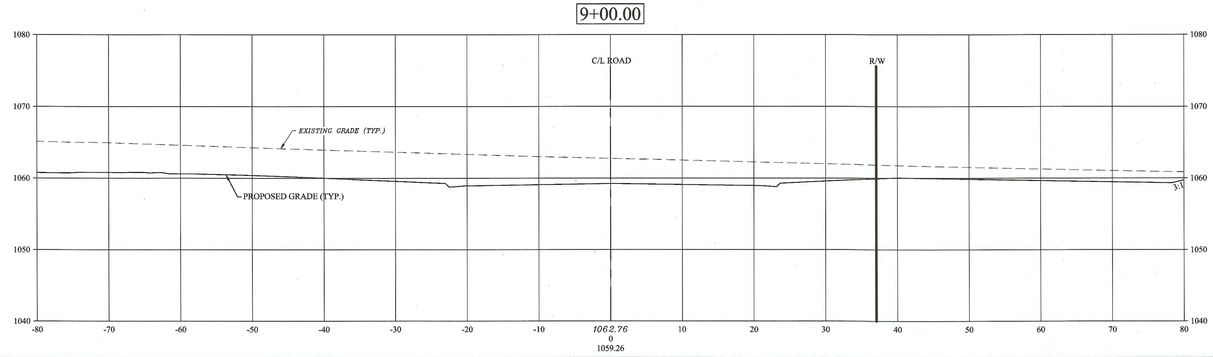

LEGEND

ITALICS TEXT REPRESENTS EXISTING CONDITION

NON-ITALICS TEXT REPRESENTS PROPOSED CONDITION

Horizontal Scale: 1" = 10'
Vertical Scale: 1" = 10'

WEBER ENGINEERING SERVICES

Where Strong Relationships & Superior Service Guide Your Project

2555 Hartville Rd., Suite B
Rootstown, OH 44272
www.WeberEngineeringServices.com
330-329-2037
matt@webercivil.com

STATE OF OHIO
MATTHEW L. WEBER
61709
REGISTERED
PROFESSIONAL ENGINEER

Reg. No.: 61709

CLIENT:

GEIS CONSTRUCTION

10020 AURORA-HUDSON RD.
STREETSBORO, OHIO
JEN DOTSON
PHONE: (216) 218-3507

OWNER:

GEIS CONSTRUCTION

10020 AURORA-HUDSON RD.
STREETSBORO, OHIO
JEN DOTSON
PHONE: (216) 218-3507

PROPOSED PHOENIX AVE. S.E.
2018 IMPROVEMENTS
MASSILLON, OHIO

Issue Date
08-31-2018
09-07-2018
09-17-2018
(BID SET)
09-24-2018
△1 10-29-2018
△2 01-18-2019
△3 01-23-2019
△4 02-20-2010
△5 05-10-2019

CROSS SECTIONS

C106B

Project No. 2018-196RW

195D 02

C:\Related - WORK\Civil 3D Projects 2018\WES2018-196 Rock & Roll\Dwg\2018-196 Sheet1N.dwg 5/10/2019 4:19:39 PM

9+50.00

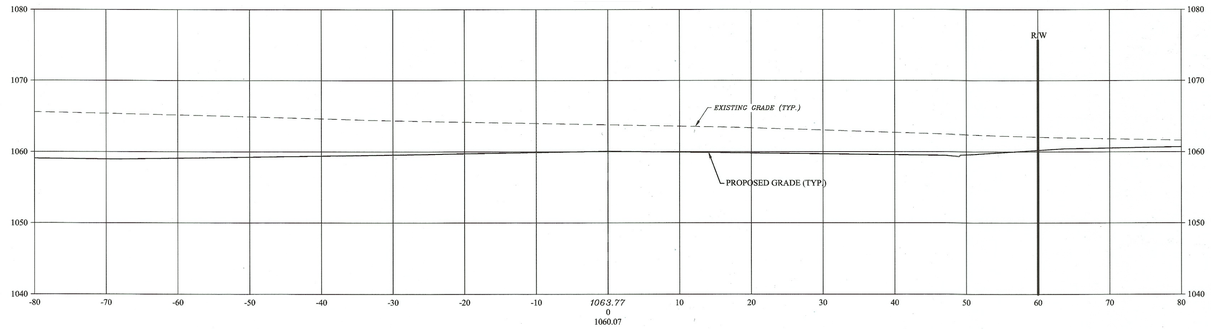

10+00.00

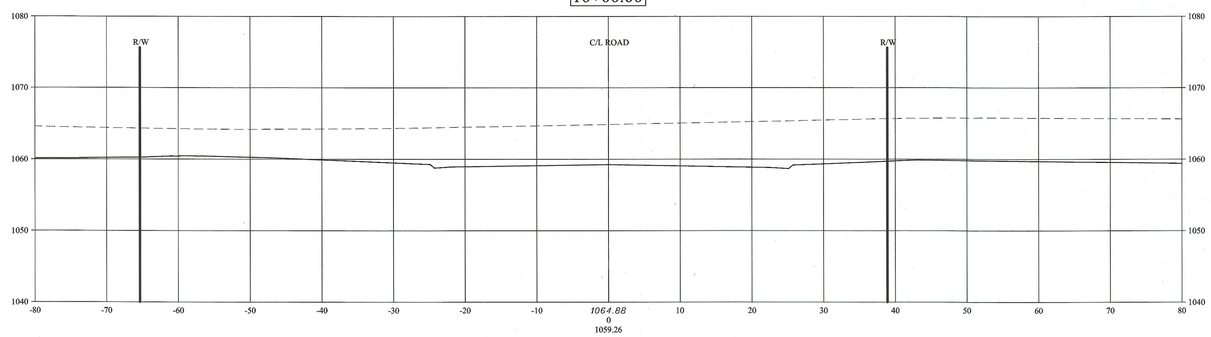

10+50.00

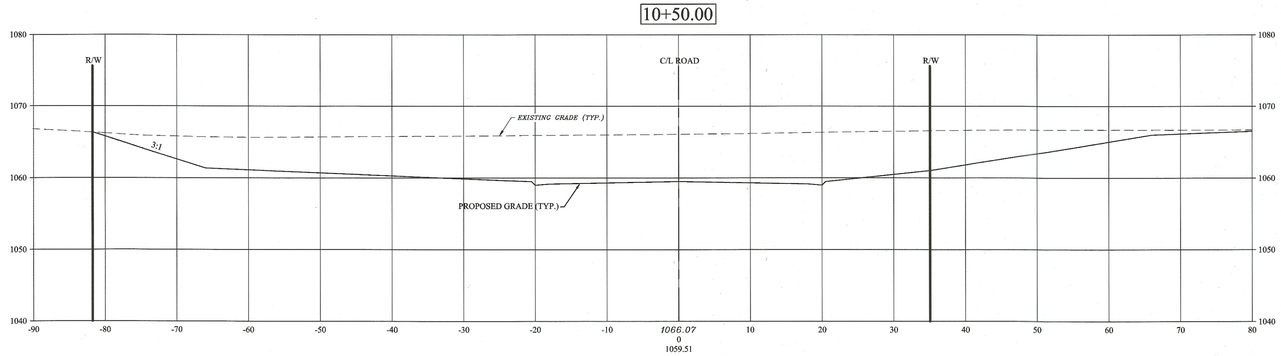

LEGEND

ITALICS TEXT REPRESENTS EXISTING CONDITION
NON-ITALICS TEXT REPRESENTS PROPOSED CONDITION

Horizontal Scale: 1" = 10'
Vertical Scale: 1" = 10'

WEBER ENGINEERING SERVICES
Where Strong Relationships & Superior Service Guide Your Project

2555 Hartville Rd., Suite B
Rootstown, OH 44272
www.WeberEngineeringServices.com
330-329-2037
matt@webercivil.com

STATE OF OHIO
MATTHEW L. WEBER
61709
REGISTERED
PROFESSIONAL ENGINEER

Reg. No.: 61709

CLIENT:

GEIS CONSTRUCTION

10020 AURORA-HUDSON RD.
STREETSBORO, OHIO
JEN DOTSON
PHONE: (216) 218-3507

OWNER:

GEIS CONSTRUCTION

10020 AURORA-HUDSON RD.
STREETSBORO, OHIO
JEN DOTSON
PHONE: (216) 218-3507

PROPOSED PHOENIX AVE. S.E.
2018 IMPROVEMENTS
MASSILLON, OHIO

Issue Date
08-31-2018
09-07-2018
09-17-2018 (BID SET)
09-24-2018
△1 10-29-2018
△2 01-18-2019
△3 01-23-2019
△4 02-20-2010
△5 05-10-2019

CROSS SECTIONS

C106C
Project No. 2018-196RW

19SD02

C:\Robinet - WORK\Civil 3D Projects 2018\WES\2018-196 Rock & Roll\Dwg\2018-196 Sited7N.dwg 5/10/2019 4:10:42 PM

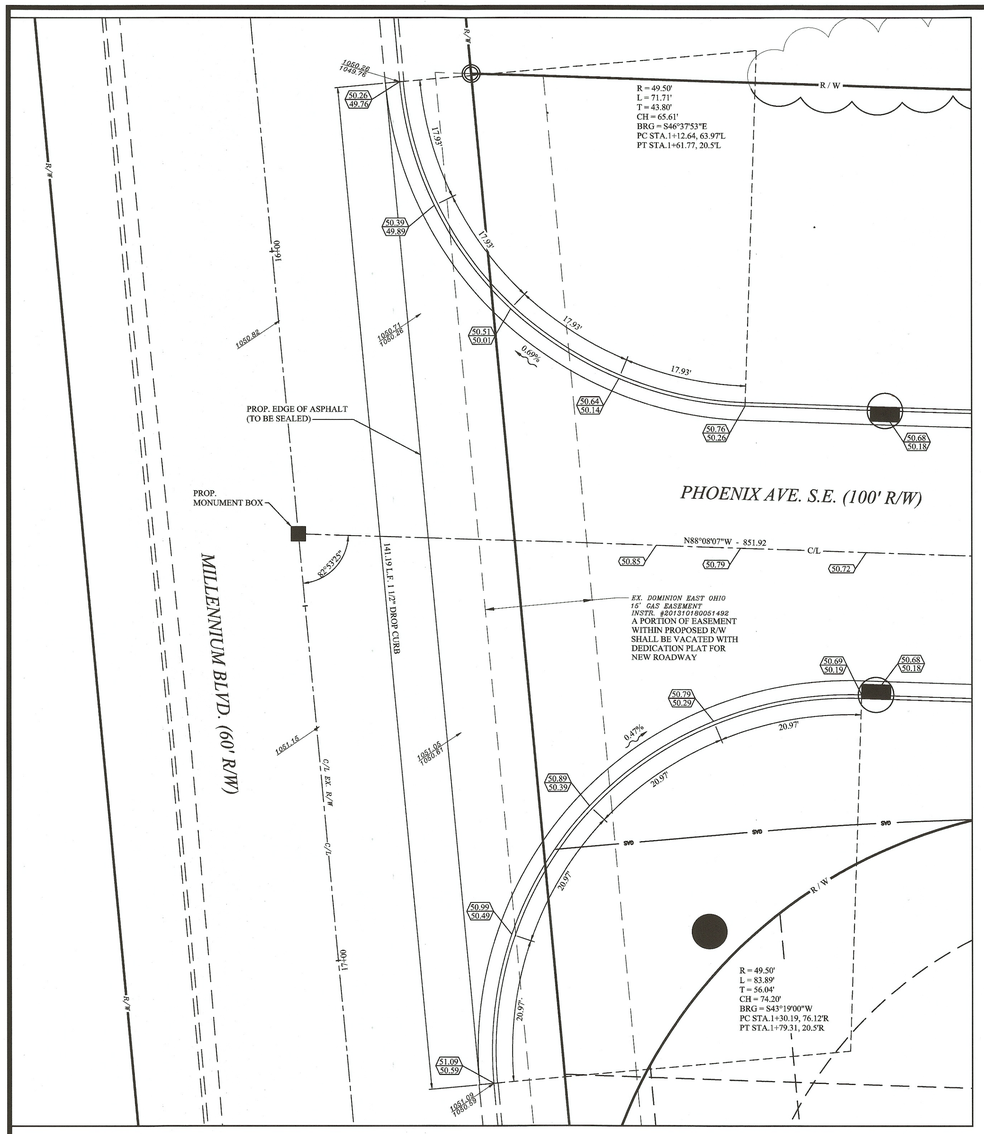

NOTE:

PAVING CONTRACTOR SHALL BE RESPONSIBLE FOR OBTAINING THE CURRENT MONUMENT BOX DETAIL FROM THE CITY OF MASSILLON ENGINEERING DEPARTMENT PRIOR TO INSTALLATION.

LEGEND

ITALICS TEXT REPRESENTS EXISTING CONDITION

NON-ITALICS TEXT REPRESENTS PROPOSED CONDITION

00.00 — PROPOSED SPOT GRADE

00.00 / 00.00 — PROPOSED GRADE AT CURB

0000.00 / 0000.00 — EXISTING SPOT GRADE

NOTES:

1. GEOMETRY IS TO BACK OF CURB UNLESS NOTED OTHERWISE.
2. ELEVATIONS SHOWN ARE AT BOTTOM FACE OF CURB (GUTTER LINE) AND TOP OF CURB.

SITE BENCH MARK

BENCH MARK #1
TOP NUT ON HYDRANT

ELEVATION = 1053.73

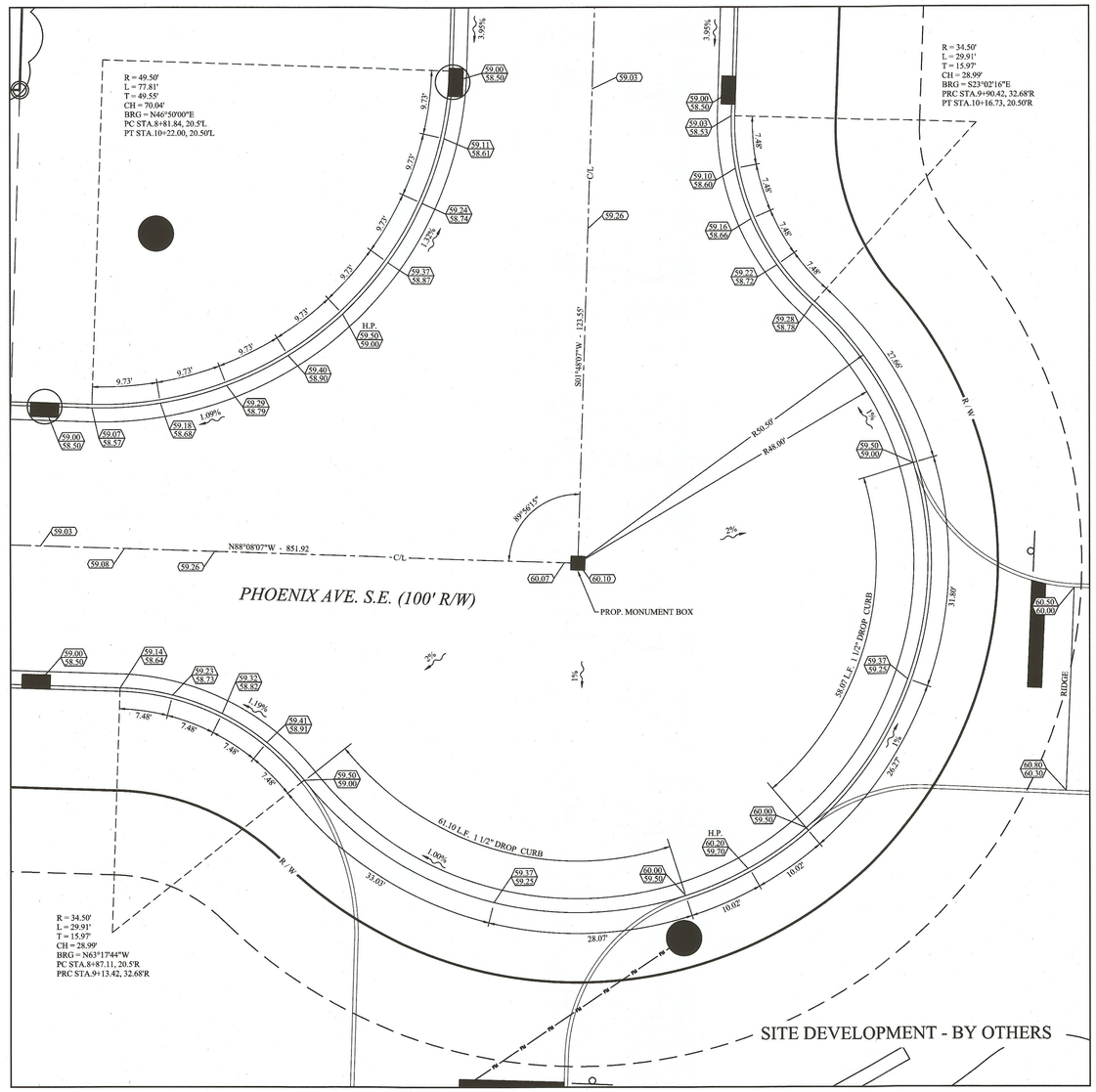

N

Scale: 1" = 10'

WEBER ENGINEERING SERVICES

Where Strong Relationships & Superior Service Guide Your Project

2555 Hartville Rd., Suite B
Rootstown, OH 44272
www.WeberEngineeringServices.com
330-329-2037
matt@webercivil.com

STATE OF OHIO — MATTHEW L. WEBER — 61709 — REGISTERED — PROFESSIONAL ENGINEER

Reg. No.: 61709

CLIENT:

GEIS CONSTRUCTION

10020 AURORA-HUDSON RD.
STREETSBORO, OHIO
JEN DOTSON
PHONE: (216) 218-3507

OWNER:

GEIS CONSTRUCTION

10020 AURORA-HUDSON RD.
STREETSBORO, OHIO
JEN DOTSON
PHONE: (216) 218-3507

PROPOSED PHOENIX AVE. S.E.
2018 IMPROVEMENTS
MASSILLON, OHIO

Issue Date
08-31-2018
09-07-2018
09-17-2018
(BID SET)
09-24-2018
1 10-29-2018
2 01-18-2019
3 01-23-2019
4 02-20-2010
5 05-10-2019

INTERSECTION DETAILS

C107

Project No. 2018-196RW

19 SD 02

C:\Reland - WORK\Civil 3D Projects 2018\WEB\2018-196 Rock & Roll\Dwg\2018-196 Sheet\N.dwg 5/10/2019 4:19:46 PM

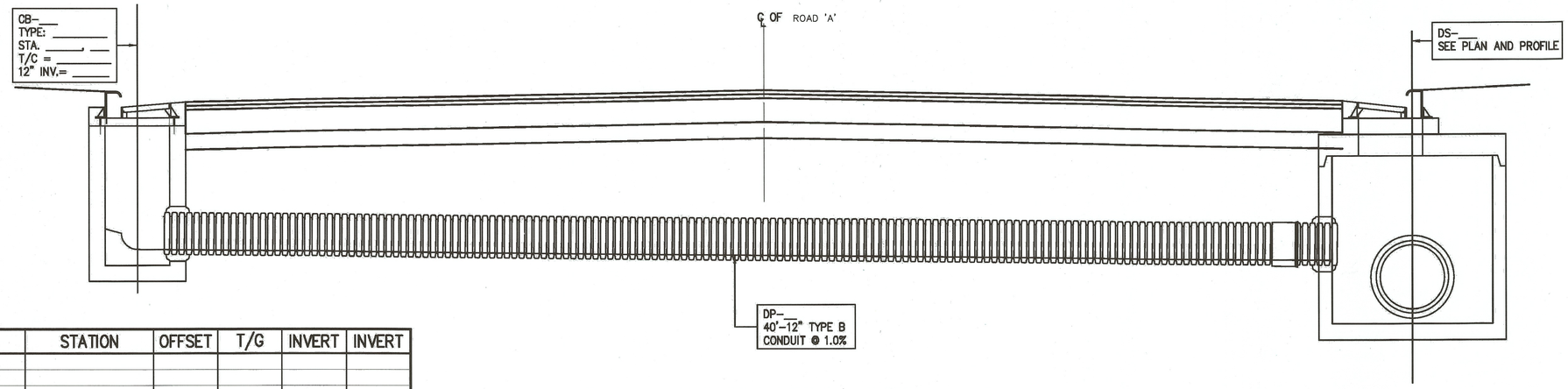

REF	TYPE	STATION	OFFSET	T/G	INVERT	INVERT

12" CONDUIT CROSSING TYPICAL SECTION

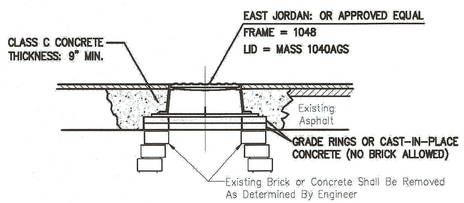

NOTE: ALL CASTINGS, LIDS AND GRATES ARE TO BE CAREFULLY REMOVED AND STORED BY THE CONTRACTOR FOR SALVAGE BY THE CITY OF MASSILLON

ITEM 604 SANITARY MANHOLE MASS1048-R

WORK SHALL INCLUDED ALL REMOVAL AND DISPOSAL OF EXISTING

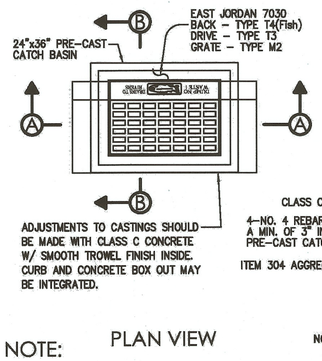

PLAN VIEW

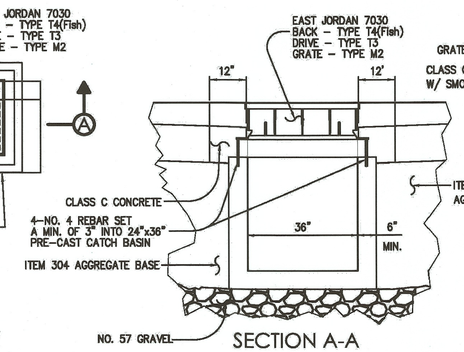

SECTION A-A

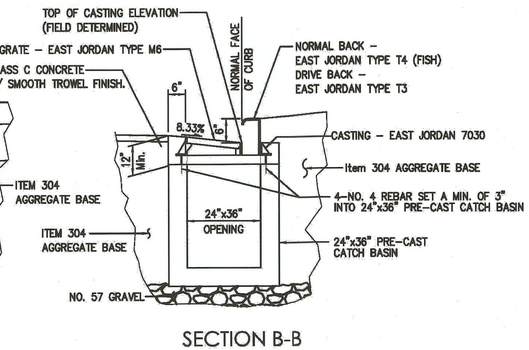

SECTION B-B

NOTE:

ALL MATERIAL AND LABOR TO PERFORM THE PROPER INSTALLATION OF TYPE ITEM 604 CB-MASS7030 SHALL BE INCLUDED IN THE UNIT PRICE BID. THIS INCLUDES BUT NOT LIMITED TO THE REMOVAL OF EXISTING STRUCTURES, CONDUIT, ROADWAY, CURB, INSTALLATION OF 57 GRAVEL, ITEM 304 AGGREGATE BASE, JOINT SEALER CONDUIT PIPE, FERNCO, CLASS C CONCRETE, CONCRETE COLLAR, AND CURBIING.

ITEM 604 CB-MASS7030

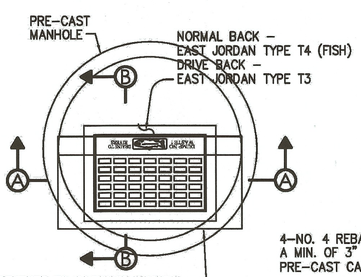

PLAN VIEW

Base I.D.	Min. "t"	Max. Pipe Size
60"	5"	36"
72"	6"	48"
84"	7"	54"
90"	7 1/2"	60"
96"	8"	60"

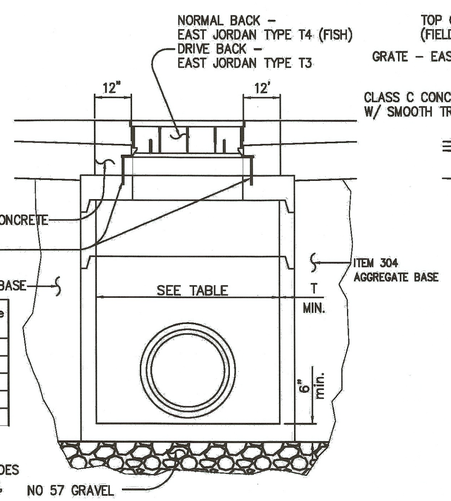

SECTION A-A

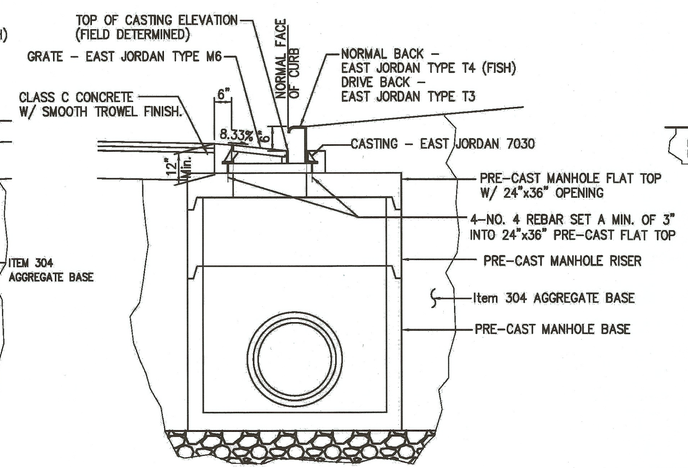

SECTION B-B

NOTE:

ALL MATERIAL AND LABOR TO PERFORM THE PROPER INSTALLATION OF TYPE ITEM 604 MH-MASS7030 SHALL BE INCLUDED IN THE UNIT PRICE BID. THIS INCLUDES BUT NOT LIMITED TO THE REMOVAL OF EXISTING STRUCTURES, CONDUIT, ROADWAY, CURB, INSTALLATION OF 57 GRAVEL, ITEM 304 AGGREGATE BASE, JOINT SEALER CONDUIT PIPE, FERNCO, CLASS C CONCRETE, CONCRETE COLLAR, AND CURBIING.

ITEM 604 MH-MASS7030

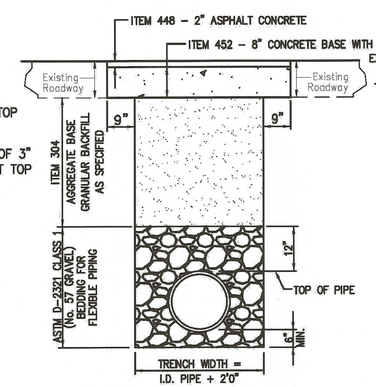

TRENCH DETAIL WITHIN ROADWAY

ALL MATERIALS AND LABOR INCLUDED IN ITEM 603

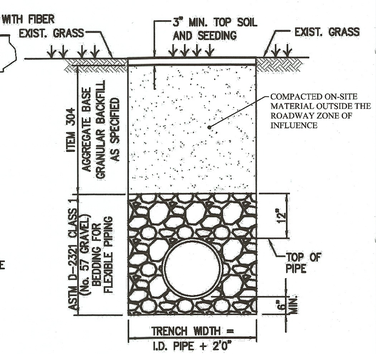

TRENCH DETAIL OUTSIDE ROADWAY

ALL MATERIALS AND LABOR INCLUDED IN ITEM 603

WEBER ENGINEERING SERVICES
Where Strong Relationships & Superior Service Guide Your Project
2555 Hartville Rd., Suite B
Rootstown, OH 44272
www.WeberEngineeringServices.com
330-329-2037
matt@webercivil.com

STATE OF OHIO
MATTHEW L. WEBER
61709
REGISTERED
PROFESSIONAL ENGINEER

Reg. No.: 61709

CLIENT:
GEIS CONSTRUCTION
10020 AURORA-HUDSON RD.
STREETSBORO, OHIO
JEN DOTSON
PHONE: (216) 218-3507

OWNER:
GEIS CONSTRUCTION
10020 AURORA-HUDSON RD.
STREETSBORO, OHIO
JEN DOTSON
PHONE: (216) 218-3507

PROPOSED PHOENIX AVE. S.E.
2018 IMPROVEMENTS
MASSILLON, OHIO

Issue Date
08-31-2018
09-07-2018
09-17-2018 (BID SET)
09-24-2018
△1 10-29-2018
△2 01-18-2019
△3 01-23-2019
△4 02-20-2010
△5 05-10-2019

DRAINAGE DETAILS

C108

Project No. 2018-196RW

19 SD 02

C:\Related - WORK\Civil 3D Projects 2018\WTES\2018-196 Book & Rt-of-Way\2018-196 Sheet\N-dwg 5/10/2019 4:19:47 PM

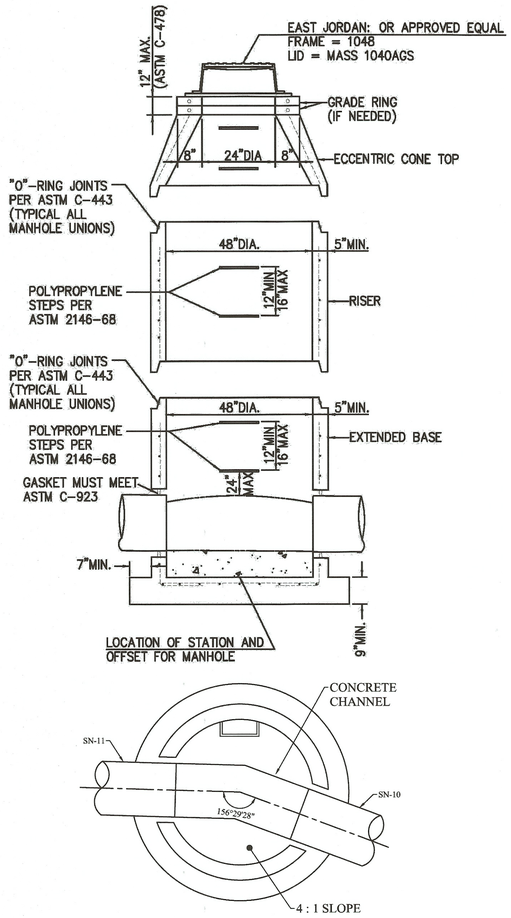

ITEM 604 SANITARY MANHOLE MASS1048-AGS (MH "J")

PRECAST CONCRETE MANHOLE
JOINTS TO BE SEALED WITH CON SEAL FED SPEC SS-S-210A

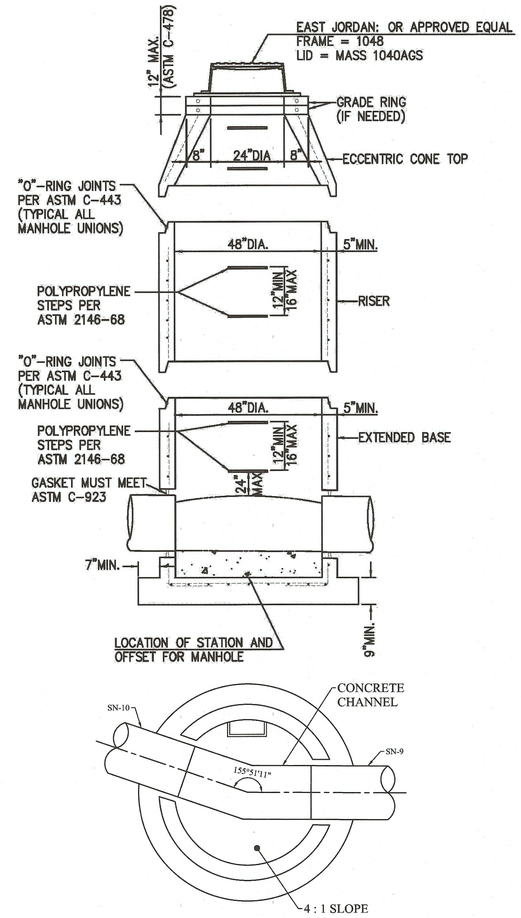

ITEM 604 SANITARY MANHOLE MASS1048-AGS (MH "I")

PRECAST CONCRETE MANHOLE
JOINTS TO BE SEALED WITH CON SEAL FED SPEC SS-S-210A

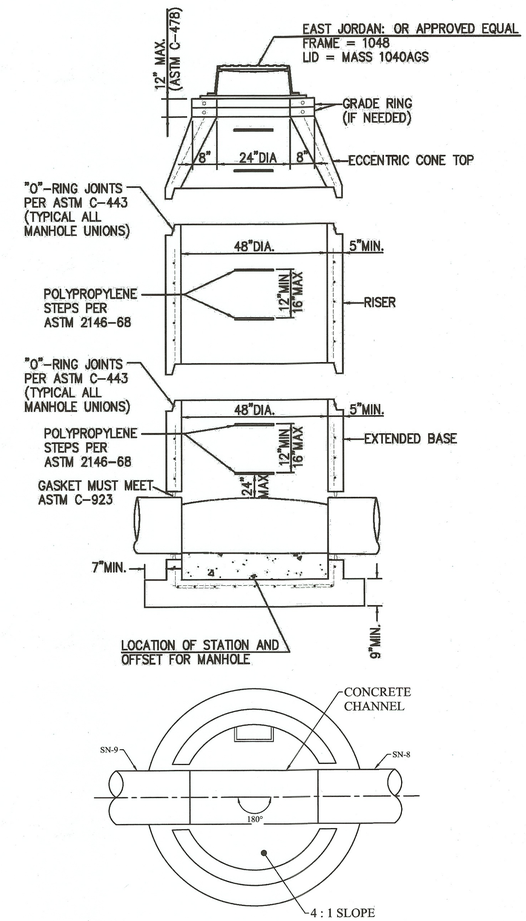

ITEM 604 SANITARY MANHOLE MASS1048-AGS (MH "H")

PRECAST CONCRETE MANHOLE
JOINTS TO BE SEALED WITH CON SEAL FED SPEC SS-S-210A

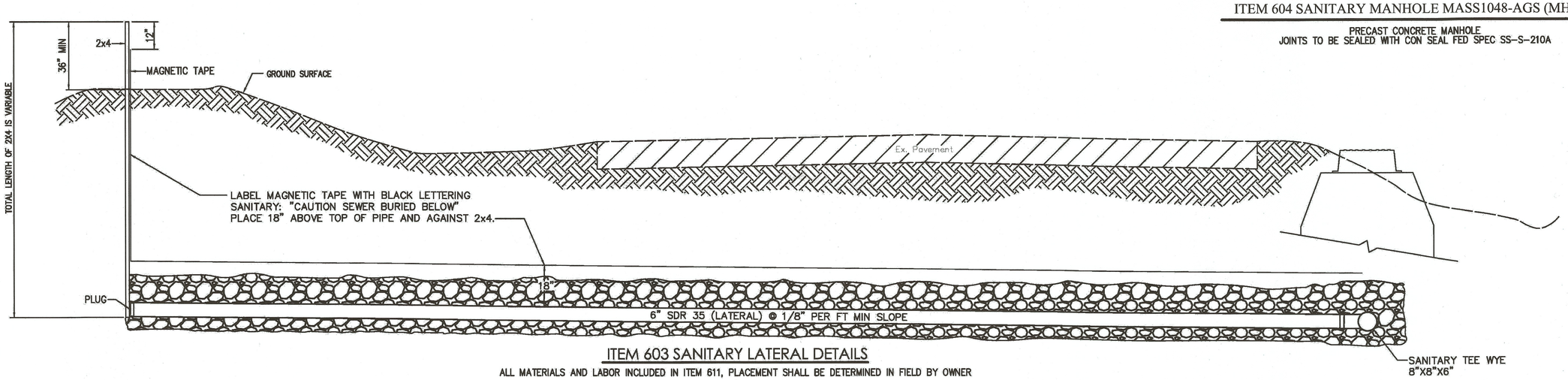

ITEM 603 SANITARY LATERAL DETAILS

ALL MATERIALS AND LABOR INCLUDED IN ITEM 611, PLACEMENT SHALL BE DETERMINED IN FIELD BY OWNER

SIZE AND SLOPE PER PLAN

WEBER ENGINEERING SERVICES
Where Strong Relationships & Superior Service Guide Your Project

2555 Hartville Rd., Suite B
Rootstown, OH 44272
www.WeberEngineeringServices.com
330-329-2037
matt@webercivil.com

STATE OF OHIO
MATTHEW L. WEBER
61709
REGISTERED
PROFESSIONAL ENGINEER

Reg. No.: 61709

CLIENT:

GEIS CONSTRUCTION

10020 AURORA-HUDSON RD.
STREETSBORO, OHIO
JEN DOTSON
PHONE: (216) 218-3507

OWNER:

GEIS CONSTRUCTION

10020 AURORA-HUDSON RD.
STREETSBORO, OHIO
JEN DOTSON
PHONE: (216) 218-3507

PROPOSED PHOENIX AVE. S.E.
2018 IMPROVEMENTS
MASSILLON, OHIO

Issue Date
08-31-2018
09-07-2018
09-17-2018 (BID SET)
09-24-2018
△1 10-29-2018
△2 01-18-2019
△3 01-23-2019
△4 02-20-2010
△5 05-10-2019

SANITARY DETAILS

C108A

Project No. 2018-196RW

19 SD 02

C:\Released - WORK\Civil 3D Projects 2018\WTS\2018-196 Rock & Ault\Dwg\2018-196 Shed\N.dwg 5/10/2019 4:10:40 PM

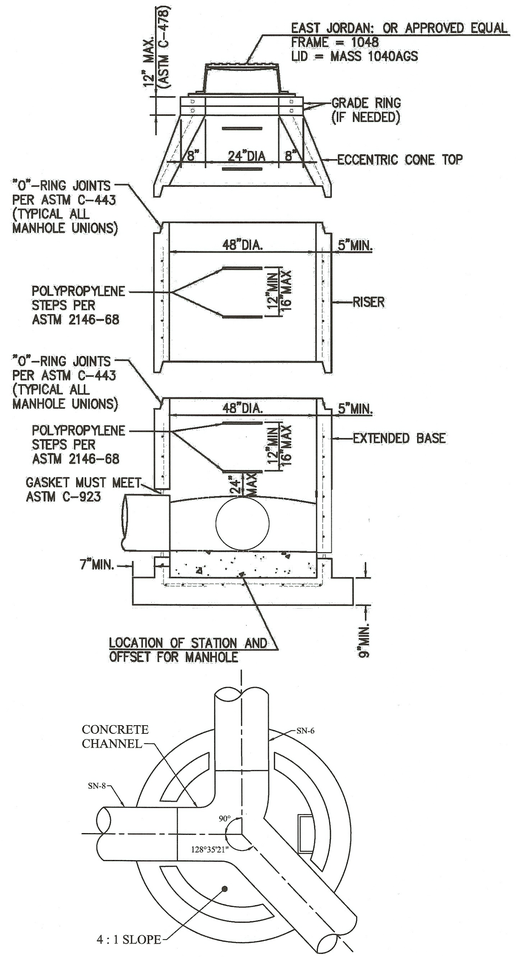

ITEM 604 SANITARY MANHOLE MASS1048-AGS (MH "G")

PRECAST CONCRETE MANHOLE
JOINTS TO BE SEALED WITH CON SEAL FED SPEC SS-S-210A

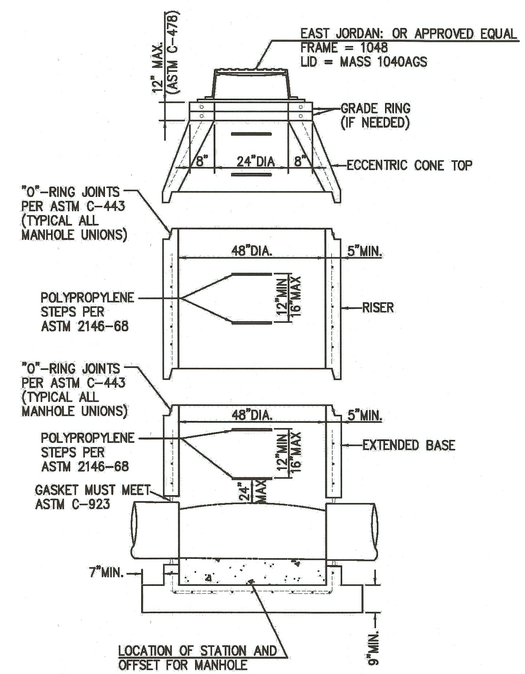

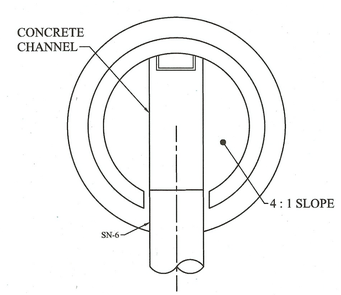

ITEM 604 SANITARY MANHOLE MASS1048-AGS (MH "F")

PRECAST CONCRETE MANHOLE
JOINTS TO BE SEALED WITH CON SEAL FED SPEC SS-S-210A

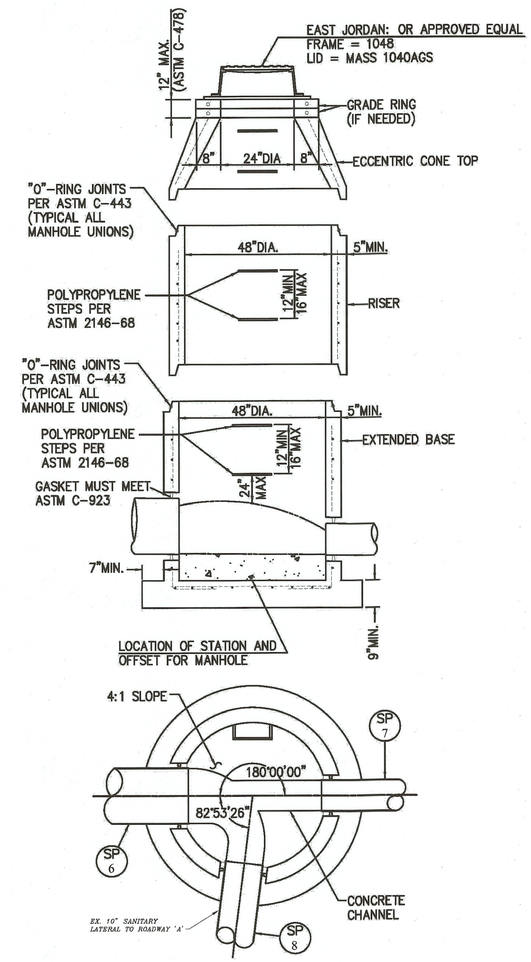

ITEM 604 EXISTING SANITARY MANHOLE MASS1048-AGS (SM-7)

PRECAST CONCRETE MANHOLE
JOINTS TO BE SEALED WITH CON SEAL FED SPEC SS-S-210A

WEBER ENGINEERING SERVICES
Where Strong Relationships & Superior Service Guide Your Project

2555 Hartville Rd., Suite B
Rootstown, OH 44272
www.WeberEngineeringServices.com
330-329-2037
matt@webercivil.com

STATE OF OHIO
MATTHEW L. WEBER
61709
REGISTERED
PROFESSIONAL ENGINEER

Reg. No.: 61709

CLIENT:

GEIS CONSTRUCTION

10020 AURORA-HUDSON RD.
STREETSBORO, OHIO
JEN DOTSON
PHONE: (216) 218-3507

OWNER:

GEIS CONSTRUCTION

10020 AURORA-HUDSON RD.
STREETSBORO, OHIO
JEN DOTSON
PHONE: (216) 218-3507

PROPOSED PHOENIX AVE. S.E.
2018 IMPROVEMENTS
MASSILLON, OHIO

Issue Date
08-31-2018
09-07-2018
09-17-2018
(BID SET)
09-24-2018
△1 10-29-2018
△2 01-18-2019
△3 01-23-2019
△4 02-20-2010
△5 05-10-2019

SANITARY DETAILS

C108B

Project No. 2018-196RW

19 SD 02

C:\Related - WORK\Civil 3D Projects 2018\WRS2018-196 Rock & Roll\Dwg\2018-196 Sized IN.dwg 5/10/2019 4:19:53 PM

THE CONTRACTOR SHALL PREVENT AND/OR REDUCE AND CONTROL SOIL EROSION RESULTING FROM THE PROPOSED IMPROVEMENTS. THE USE OF SILT FENCING, JUTE MATTING, TEMPORARY SEEDING, SILT CHECKS, INLET PROTECTION AROUND ALL CATCH BASINS, STABILIZED CONSTRUCTION ENTRANCE(S), ETC. WILL BE REQUIRED. SEDIMENT CONTROL STRUCTURES/DEVICES SHALL BE INSTALLED IN ACCORDANCE WITH THE LATEST EDITION OF THE MANUAL RAINWATER AND LAND DEVELOPMENT - OHIO'S STANDARDS FOR STORM WATER MANAGEMENT, LAND DEVELOPMENT AND URBAN STREAM PROTECTION. SEDIMENT CONTROL DEVICES MUST BE INSTALLED PRIOR TO BEGINNING ANY CONSTRUCTION ACTIVITY. THE CONTRACTOR SHALL BE RESPONSIBLE FOR CONTINUED INSPECTION AND MAINTENANCE OF ALL SEDIMENT CONTROL DEVICES. THE CONTRACTOR SHALL FOLLOW THE REQUIREMENTS SET FORTH ON THE APPROVED STORM WATER POLLUTION PREVENTION PLAN IF APPLICABLE, OR AS DETAILED ON THE CONSTRUCTION PLANS, AS SPECIFIED BY THE CITY OF MASSILLON."

INSPECTION CHECKLIST

INSPECTIONS SHALL BE MADE ONCE EVERY SEVEN (7) CALENDAR DAYS AND WITHIN 24 HOURS AFTER ANY STORM EVEN GREATER THAN ONE-HALF INCH OF RAIN PER 24 HOUR PERIOD

DATE	INSPECTOR	WEATHER CONDITIONS	RAINFALL AMOUNT	SEDIMENT DISCHARGE	DISCHARGE LOCATION	BMPS FAILED	ADDITIONAL BMPS NEEDED	CORRECTION MADE

"I, THE UNDERSIGNED, CERTIFY UNDER PENALTY OF LAW THAT THIS DOCUMENT AND ALL ATTACHMENTS WERE PREPARED UNDER MY DIRECTION OR SUPERVISION IN ACCORDANCE WITH A SYSTEM DESIGNED TO ASSURE THAT QUALIFIED PERSONNEL PROPERLY GATHERED AND EVALUATED THE INFORMATION SUBMITTED. BASED ON MY INQUIRY OF THE PERSON OR PERSONS WHO MANAGED THE SYSTEM, OR THOSE PERSONS DIRECTLY RESPONSIBLE FOR GATHERING THE INFORMATION, THE INFORMATION SUBMITTED IS, TO THE BEST OF MY KNOWLEDGE AND BELIEF, TRUE, ACCURATE, AND COMPLETE. I AM AWARE THAT THERE ARE SIGNIFICANT PENALTIES FOR SUBMITTING FALSE INFORMATION, INCLUDING THE POSSIBILITY OF FINE AND IMPRISONMENT FOR KNOWING VIOLATIONS."

SIGNATURES:

SITE CONTRACTOR _____ DATE _____

GENERAL CONTRACTOR _____ DATE _____

OWNER _____ DATE _____

DESIGN ENGINEER _____ DATE _____

SITE BENCH MARK

BENCH MARK #1
TOP NUT ON HYDRANT

ELEVATION = 1053.73

LEGEND

ITALICS TEXT REPRESENTS EXISTING CONDITION

NON-ITALICS TEXT REPRESENTS PROPOSED CONDITION

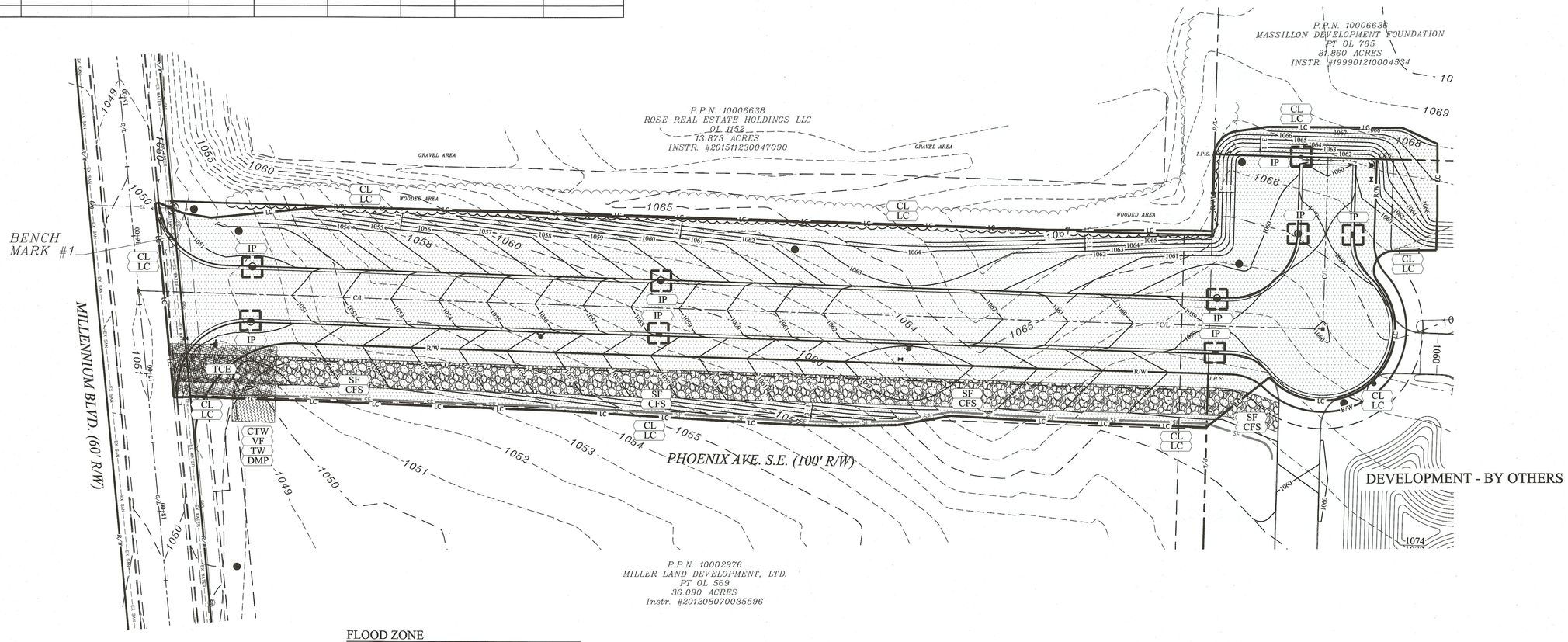

FLOOD ZONE

FLOOD ZONE "X" PER FLOOD INSURANCE
RATE MAP NUMBER 39151C 0213 E
COMMUNITY PANEL NUMBER 39151 0213 E
EFFECTIVE DATE (NOT PRINTED)

SWP3 AMENDMENT ACTIVITIES

GRADING _____ DATE

SITE STABILIZATION _____ DATE

SWP3 AMENDMENT _____ DATE

SWP3 RESPONSIBLE PARTY

GEIS CONSTRUCTION
JEN DOTSON
10020 AURORA-HUDSON RD.
STREETSBORO, OHIO
216-218-3507

ESTIMATED CONSTRUCTION DATES

START DATE 10-15-2018
END DATE 09-01-2019

SWP3 PREPARED

09-17-2018

TAG	HATCH/SYMBOL	SWP3 BMP
CL / LC	LC 3.07 Ac. LC	CLEARING LIMITS, LIMITS OF CONSTRUCTION
TCE		TEMPORARY CONSTRUCTION ENTRANCE
CTW / VF / TW / DMP		CEMENT TRUCK WASHOUT, VEHICLE FUELING, TOXIC WASTE AND DUMPSTER LOCATION
IP		INLET PROTECTION (SEE DETAIL ON SHT. C109)
IPSS		INLET SILT SACK PROTECTION (SEE DETAIL ON SHT. C109)

TAG	LINE	SWP3 BMP
SF	SF	SILT FENCE
CFS	CFS	12" COMPOST FILTER SOCK MAY BE SUBSTITUTED FOR SILT FENCE AT CONTRACTORS DISCRETION

ALL OFF-SITE BORROW OR SPOIL AREAS SHALL BE REQUIRED TO BE PERMITTED BY A SEPARATE NOI AND RELATED SWP3.

THIS PROJECT WILL HAVE NO OFF-SITE BORROW OR SPOIL AREAS. ALL MATERIALS WILL BE CONTAINED WITHIN THE SITE. (TO BE COORDINATED WITH ROCK & ROLL SITE PLANS)

N

Scale: 1" = 40'

OHIO Utilities Protection SERVICE
Call Before You Dig
800-362-2764 or 8-1-1
www.oups.org

OGPUPS
Ohio Oil & Gas Producers Underground Protection Service
800-925-0988 or 8-1-1
www.ogpups.org

WEBER ENGINEERING SERVICES
Where Strong Relationships & Superior Service Guide Your Project
2555 Hartville Rd., Suite B
Rootstown, OH 44272
www.WeberEngineeringServices.com
330-329-2037
matt@webercivil.com

STATE OF OHIO
MATTHEW L. WEBER
61709
REGISTERED
PROFESSIONAL ENGINEER

Reg. No.: 61709

CLIENT:

GEIS CONSTRUCTION

10020 AURORA-HUDSON RD.
STREETSBORO, OHIO
JEN DOTSON
PHONE: (216) 218-3507

OWNER:

GEIS CONSTRUCTION

10020 AURORA-HUDSON RD.
STREETSBORO, OHIO
JEN DOTSON
PHONE: (216) 218-3507

PROPOSED PHOENIX AVE. S.E.
2018 IMPROVEMENTS
MASSILLON, OHIO

Issue Date
08-31-2018
09-07-2018
09-17-2018 (BID SET)
09-24-2018
△1 10-29-2018
△2 01-18-2019
△3 01-23-2019
△4 02-20-2010
△5 05-10-2019

SWP3 PLAN

C109
Project No. 2018-196RW

19 SD 02

C:\Related - WORK\Civil\30 Projects\2018\196\SD\18-196 Rock & Roll\Dwg\2018-196 Sheet(N).dwg,5/10/2019 4:19:59 PM

SITE BENCH MARK
BENCH MARK #1 TOP NUT ON HYDRANT
ELEVATION = 1053.73

LEGEND

ITALICS TEXT REPRESENTS EXISTING CONDITION

NON-ITALICS TEXT REPRESENTS PROPOSED CONDITION

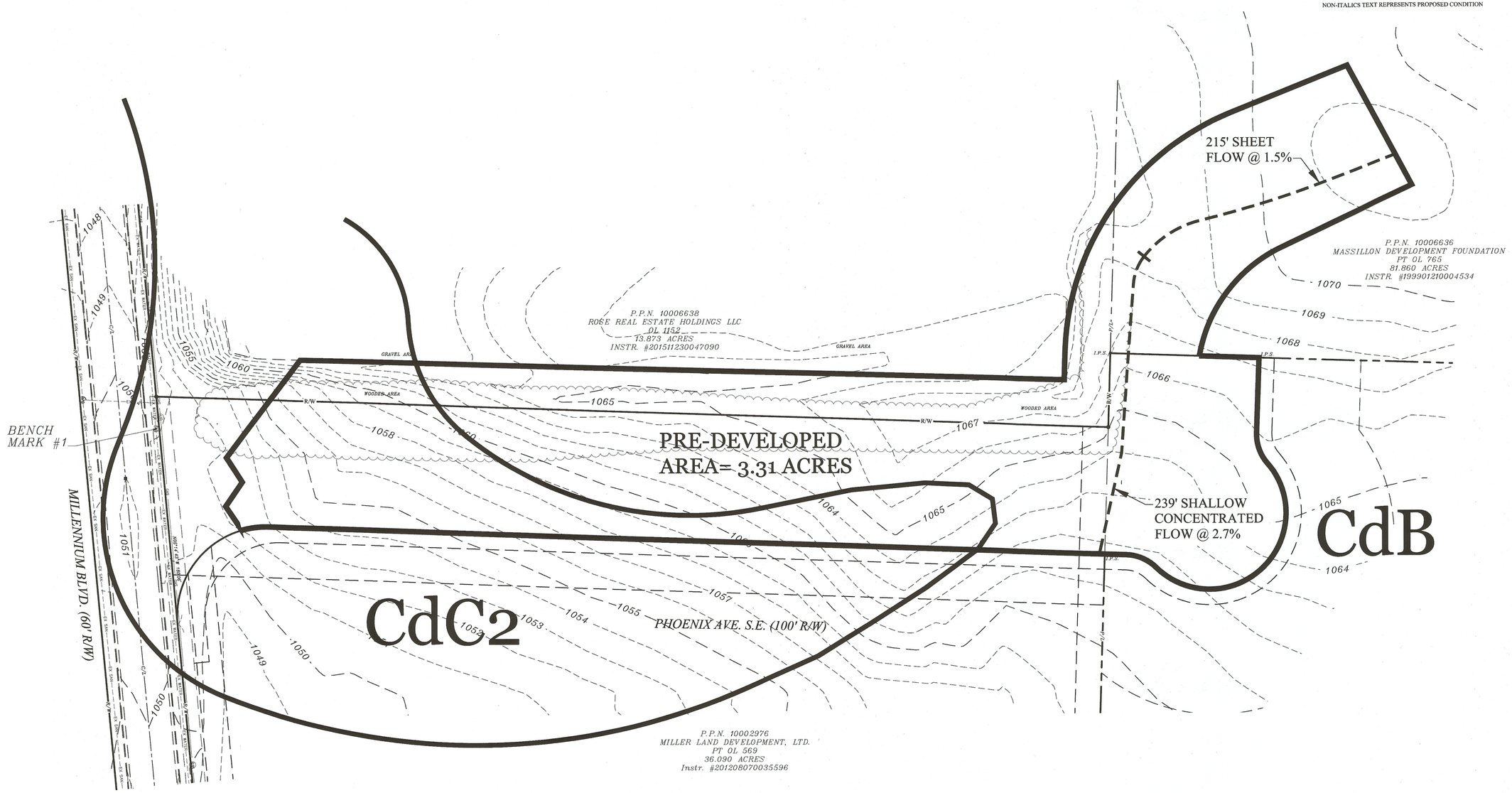

PRE-DEVELOPED DRAINAGE MAP & SOIL MAP

PRE-DEVELOPED: AREA = 3.31 AC., CN = 85, TC = 24.7 MIN.

CdB - Canfield silt loam, 2 to 6 percent slopes
CdC2 - Canfield silt loam, 6 to 12 percent slopes, eroded

N

Scale: 1" = 40'

WEBER ENGINEERING SERVICES
Where Strong Relationships & Superior Service Guide Your Project

2555 Hartville Rd., Suite B
Rootstown, OH 44272
www.WeberEngineeringServices.com
330-329-2037
matt@webercivil.com

STATE OF OHIO
MATTHEW L. WEBER
61709
REGISTERED
PROFESSIONAL ENGINEER

Reg. No.: 61709

CLIENT:

GEIS CONSTRUCTION

10020 AURORA-HUDSON RD.
STREETSBORO, OHIO
JEN DOTSON
PHONE: (216) 218-3507

OWNER:

GEIS CONSTRUCTION

10020 AURORA-HUDSON RD.
STREETSBORO, OHIO
JEN DOTSON
PHONE: (216) 218-3507

PROPOSED PHOENIX AVE. S.E.
2018 IMPROVEMENTS
MASSILLON, OHIO

Issue Date
08-31-2018
09-07-2018
09-17-2018
(BID SET)
09-24-2018
△1 10-29-2018
△2 01-18-2019
△3 01-23-2019
△4 02-20-2010
△5 05-10-2019

SWP3
DETAILS

C110
Project No. 2018-196RW

19 SD 02

C:\Bcaned - WORK\Civil 3D Projects-2018\196\SD\2018-196 Sheet\N.dwg 5/10/2019 4:20:03 PM

SITE BENCH MARK
BENCH MARK #1 TOP NUT ON HYDRANT
ELEVATION = 1053.73

LEGEND

ITALICS TEXT REPRESENTS EXISTING CONDITION

NON-ITALICS TEXT REPRESENTS PROPOSED CONDITION

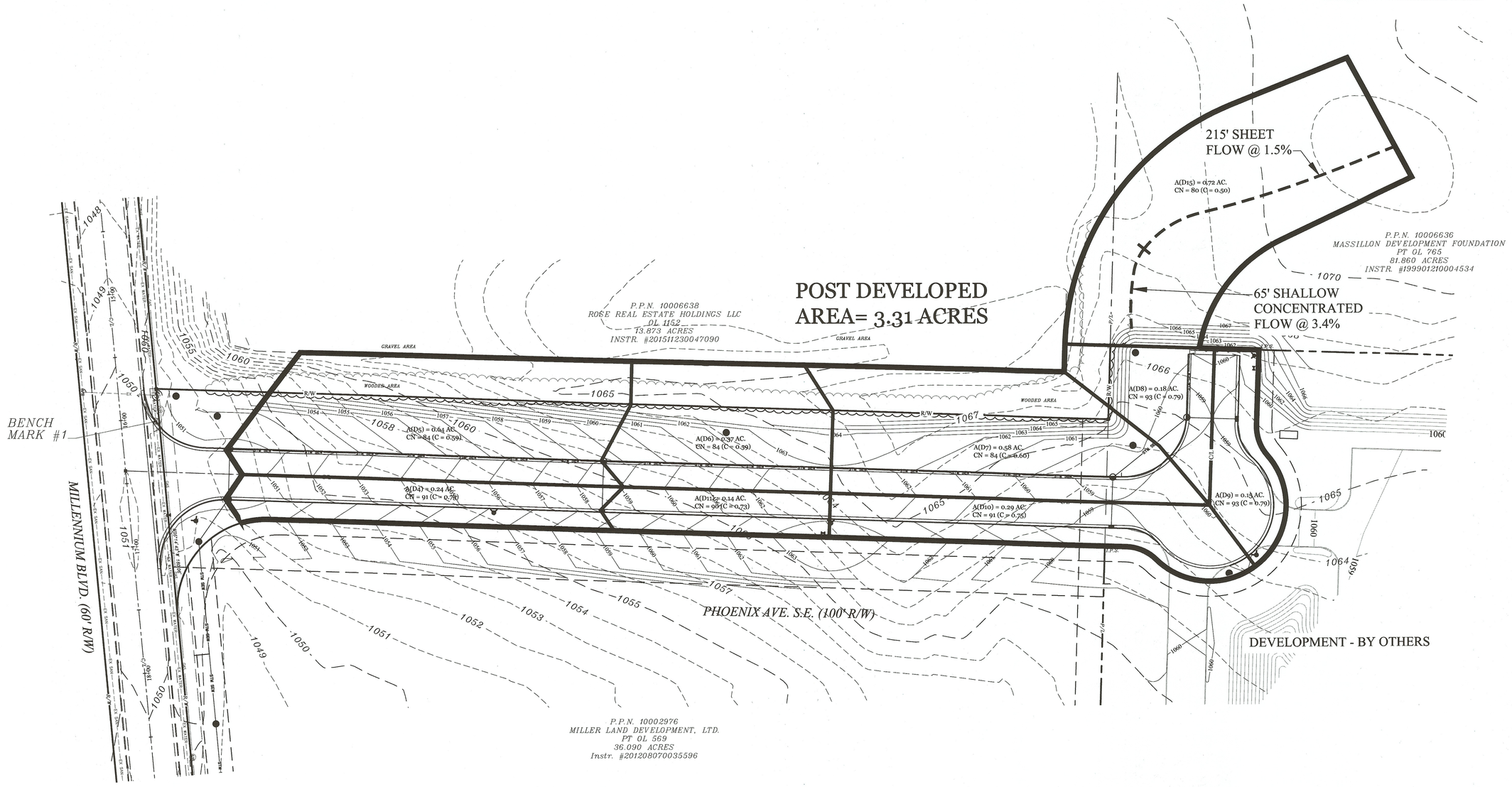

POST DEVELOPED DRAINAGE MAP

POST-DEVELOPED: AREA = 3.31 AC., CN = 85, TC = 23.6 MIN.

OHIO Utilities Protection SERVICE
Call Before You Dig
800-362-2764 or 8-1-1
www.oups.org

OGPUPS
Ohio Oil & Gas Producers Underground Protection Service
800-925-0988 or 8-1-1
www.ogpups.org

N

Scale: 1" = 40'

WEBER ENGINEERING SERVICES
Where Strong Relationships & Superior Service Guide Your Project

2555 Hartville Rd., Suite B
Rootstown, OH 44272
www.WeberEngineeringServices.com
330-329-2037
matt@webercivil.com

STATE OF OHIO
MATTHEW L. WEBER
61709
REGISTERED
PROFESSIONAL ENGINEER

Reg. No.: 61709

CLIENT:

GEIS CONSTRUCTION

10020 AURORA-HUDSON RD.
STREETSBORO, OHIO
JEN DOTSON
PHONE: (216) 218-3507

OWNER:

GEIS CONSTRUCTION

10020 AURORA-HUDSON RD.
STREETSBORO, OHIO
JEN DOTSON
PHONE: (216) 218-3507

PROPOSED PHOENIX AVE. S.E.
2018 IMPROVEMENTS
MASSILLON, OHIO

Issue Date
08-31-2018
09-07-2018
09-17-2018 (BID SET)
09-24-2018
△1 10-29-2018
△2 01-18-2019
△3 01-23-2019
△4 02-20-2010
△5 05-10-2019

SWP3 DETAILS

C110A

Project No. 2018-196RW

19 SD 02

C:\Autodesk - WORK\Civil 3D Projects\2018\196 Rose & Rolf\Dwg\2018-196 Sheet1N.dwg 5/10/2019 4:30:07 PM

STORM SEWER CALCULATIONS (10-YR)

Storm Sewer Tabulation

Page 1

Station		Len	Drng Area		Rnoff coeff	Area x C		Tc		Rain (I)	Total flow	Cap full	Vel	Pipe		Invert Elev		HGL Elev		Grnd / Rim Elev		Line ID
Line	To Line	(ft)	Incr (ac)	Total (ac)	(C)	Incr	Total	Inlet (min)	Syst (min)	(in/hr)	(cfs)	(cfs)	(ft/s)	Size (in)	Slope (%)	Dn (ft)	Up (ft)	Dn (ft)	Up (ft)	Dn (ft)	Up (ft)	
1	End	33.039	0.01	0.02	0.90	0.01	0.02	10.0	10.1	4.9	6.52	13.73	5.68	15	3.24	1041.78	1042.85	1043.03	1043.88	1047.58	1047.63	ST-16
2	1	35.655	0.01	0.01	0.90	0.01	0.01	10.0	10.0	4.9	6.47	13.71	6.01	15	3.23	1042.85	1044.00	1043.88	1045.03	1047.63	1049.25	ST-14
3	End	154.955	0.01	3.33	0.90	0.01	2.08	10.0	35.7	2.5	5.19	16.91	1.92	24	0.40	1044.00	1044.62	1046.00	1046.04	1049.25	1050.50	ST-13
4	3	143.698	0.01	3.32	0.90	0.01	2.07	10.0	34.5	2.6	5.29	16.22	3.32	24	0.37	1044.62	1045.15	1046.05	1045.96	1050.50	1051.50	ST-12
5	4	40.940	0.24	3.31	0.75	0.18	2.06	10.0	34.1	2.6	5.30	16.71	4.44	24	0.39	1045.15	1045.31	1045.96	1046.12	1051.50	1050.18	ST-11
6	5	39.000	0.64	3.07	0.59	0.38	1.88	10.0	33.7	2.6	4.87	16.57	4.20	24	0.38	1045.31	1045.46	1046.12	1046.24	1050.18	1050.18	ST-9
7	6	293.688	0.37	2.43	0.59	0.22	1.51	10.0	30.3	2.8	4.16	16.94	3.91	24	0.40	1045.46	1046.64	1046.24	1047.36	1050.18	1057.93	ST-4
8	7	400.113	0.58	1.92	0.60	0.35	1.19	10.0	24.7	3.1	3.70	16.90	3.83	24	0.40	1046.64	1048.24	1047.36	1048.91	1057.93	1058.50	ST-3
9	8	75.299	0.18	1.05	0.79	0.14	0.62	10.0	24.2	3.2	1.96	4.20	4.63	12	1.00	1053.35	1054.10	1053.83	1054.70	1058.50	1058.50	ST-1
10	9	39.000	0.15	0.15	0.79	0.12	0.12	10.0	10.0	4.9	0.59	4.26	1.96	12	1.03	1054.10	1054.50	1054.70	1054.82	1058.50	1058.50	ST-5
11	9	55.065	0.72	0.72	0.50	0.36	0.36	23.6	23.6	3.2	1.15	4.21	2.85	12	1.00	1054.10	1054.65	1054.70	1055.10	1058.50	1060.20	ST-15
12	8	39.000	0.29	0.29	0.75	0.22	0.22	10.0	10.0	4.9	1.08	4.26	3.90	12	1.03	1053.35	1053.75	1053.69	1054.19	1058.50	1058.50	ST-6
13	7	39.000	0.14	0.14	0.73	0.10	0.10	10.0	10.0	4.9	0.51	4.26	3.13	12	1.03	1053.50	1053.90	1053.73	1054.20	1057.93	1057.93	ST-8

Project File: 2018-196 Rdwy Storm 01B.stm | Number of lines: 13 | Run Date: 9/16/2018

NOTES:Intensity = 47.83 / (Inlet time + 8.30) ^ 0.78; Return period =Yrs. 10 ; c = cir e = ellip b = box

Storm Sewers v10.50

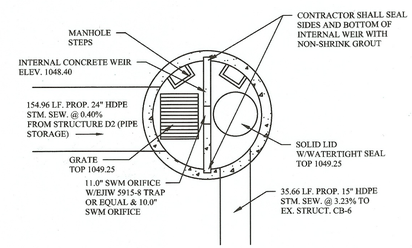

(TOP VIEW) PERMANENT OUTLET STRUCTURE D1 DETAIL

REFERENCE ONLY

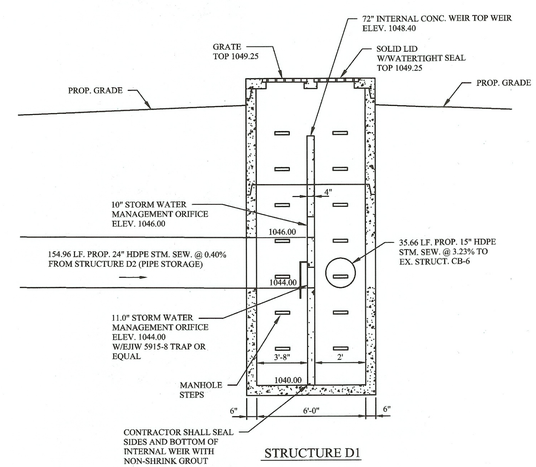

PERMANENT OUTLET STRUCTURE DETAIL

REFERENCE ONLY NOT TO SCALE

WEBER ENGINEERING SERVICES

Where Strong Relationships & Superior Service Guide Your Project

2555 Hartville Rd., Suite B
Rootstown, OH 44272
www.WeberEngineeringServices.com
330-329-2037
matt@webercivil.com

STATE OF OHIO
MATTHEW L. WEBER
61709
REGISTERED
PROFESSIONAL ENGINEER

Reg. No.: 61709

CLIENT:

GEIS CONSTRUCTION

10020 AURORA-HUDSON RD.
STREETSBORO, OHIO
JEN DOTSON
PHONE: (216) 218-3507

OWNER:

GEIS CONSTRUCTION

10020 AURORA-HUDSON RD.
STREETSBORO, OHIO
JEN DOTSON
PHONE: (216) 218-3507

PROPOSED PHOENIX AVE. S.E.
2018 IMPROVEMENTS
MASSILLON, OHIO

Issue Date
08-31-2018
09-07-2018
09-17-2018
(BID SET)
09-24-2018
1 10-29-2018
2 01-18-2019
3 01-23-2019
4 02-20-2010
5 05-10-2019

SWP3 DETAILS

C110B

Project No. 2018-196RW

19 SD 02

1. Construction personnel, including subcontractors who may use or handle hazardous or toxic materials. shall be made aware of the following general guidelines regarding disposal and handling of hazardous and construction wastes:

- Prevent spills
- Use products up
- Follow label directions for disposal
- Remove lids from empty bottles and cans when disposing in trash
- Recycle wastes whenever possible
- Don't pour into waterways, storm drains or onto the ground
- Don't pour down the sink, floor drain or septic tanks
- Don't bury chemicals or containers
- Don't bum chemicals or containers
- Don't mix chemicals together

2. **Containers shall be provided for the proper collection of all waste material including construction debris, trash, petroleum products and any hazardous materials used on-site.** Containers shall be covered and not leaking. All waste material shall be disposed of at facilities approved for that material. Construction Demolition and Debris (CD&D) waste must be disposed of at an Ohio EPA approved CD&D landfill.

3. **No construction related waste materials are to be buried on-site.** By exception, clean fill (bricks, hardened concrete, soil) may be utilized in a way which does not encroach upon natural wetlands, streams or floodplains or result in the contamination of waters of the state.

4. **Handling Construction Chemicals.** Mixing. pumping. transferring or other handling of construction chemicals such as fertilizer. lime. asphalt. concrete drying compounds. and all other potentially hazardous materials shall be performed in an area away from any watercourse. ditch or storm drain.

5. **Equipment Fueling and Maintenance,** oil changing. etc .. shall be performed away from watercourses. ditches or storm drains. in an area designated for that purpose. The designated area shall be equipped for recycling oil and catching spills. Secondary containment shall be provided for all fuel oil storage tanks. These areas must be inspected every seven days and within 24 hrs. of a 0.5 inch or greater rain event to ensure there are no exposed materials which would contaminate storm water. Site operators must be aware that Spill Prevention Control and Countermeasures (SPCC) requirements may apply. An SPCC plan is required for sites with one single above ground tank of 660 gallons or more, accumulative above ground storage of 1330 gallons or more, or 42,000 gallons of underground storage. Contaminated soils must be disposed of in accordance with Item 8.

6. **Concrete Wash Water** shall not be allowed to flow to streams, ditches, storm drains, or any other water conveyance. A sump or pit with no potential for discharge shall be constructed if needed to contain concrete wash water. Field tile or other subsurface drainage structures within 10 ft. of the sump shall be cut and plugged.

7. **Spill Reporting Requirements:** Spills on pavement shall be absorbed with sawdust or kitty litter and disposed of with the trash at a licensed sanitary landfill. Hazardous or industrial wastes such as most solvents, gasoline, oil-based paints, and cement curing compounds require special handling. Spills shall be reported to Ohio EPA (1-800-282-9378). Spills of 25 gallons or more of petroleum products shall be reported to Ohio EPA, the local fire department, and the Local Emergency Planning Committee within 30 min. of the discovery of the release. All spills which contact waters of the state must be reported to Ohio EPA.

8. **Contaminated Soils.** If substances such as oil, diesel fuel, hydraulic fluid, antifreeze, etc. are spilled, leaked, or released onto the soil, the soil should be dug up and disposed of at licensed sanitary landfill or other approved petroleum contaminated soil remediation facility. (not a construction/demolition debris landfill). Note that storm water runoff associated with contaminated soils are not be authorized under Ohio EPA's General Storm Water Permit associated with Construction Activities.

9. **Open Burning.** No materials containing rubber, grease, asphalt, or petroleum products, such as tires, autoparts, plastics or plastic coated wire may be burned (OAC 3745-19). Open burning is not allowed in restricted areas, which are defined as: 1) within corporation limits; 2) within 1000 feet outside a municipal corporation having a population of 1000 to 10,000; and 3) a one mile zone outside of a corporation of 10, 000 or more. Outside of restricted areas, no open burning is allowed within a 1000 feet of an inhabited building on another property. Open burning is permissible in a restricted area for: heating tar, welding, smudge pots and similar occupational needs, and heating for warmth or outdoor barbeques. Outside of restricted areas, open burning is permissible for landscape or land-clearing wastes (plant material, with prior written permission from Ohio EPA) , and agricultural wastes, excluding buildings.

10. **Dust Control or dust suppressants** shall be used to prevent nuisance conditions, in accordance with the manufacturer's specifications and in a manner, which prevent a discharge to waters of the state. Sufficient distance must be provided between applications and nearby bridges, catch basins, and other waterways. Application (excluding water) may not occur when rain is imminent as noted in the short term forecast. Used oil may not be applied for dust control.

11. **Other Air Permitting Requirements:** Certain activities associated with construction will require air permits including but not limited to: mobile concrete batch plants, mobile asphalt plants, concrete crushers, large generators, etc. These activities will require specific Ohio EPA Air Permits for installation and operation. Operators must seek authorization from the corresponding district of Ohio EPA. For demolition of all commercial sites, a Notification for Restoration and Demolition must be submitted to Ohio EPA to determine if asbestos corrective actions are required.

12. **Process Waste Water/Leachate Management.** Ohio EPA's Construction General Permit only allows the discharge of storm water and does not include other waste streams/discharges such as vehicle and/or equipment washing, on-site septic leachate concrete wash outs, which are considered process wastewaters. All process wastewaters must be collected and properly disposed at an approved disposal facility. In the event, leachate or septage is discharged; it must be isolated for collection and proper disposal and corrective actions taken to eliminate the source of waste water.

13. **A Permit To Install (PTn** is required prior to the construction of all centralized sanitary systems, including sewer extensions, and sewerage systems (except those serving one, two, and three family dwellings) and potable water lines. Plans must be submitted and approved by Ohio EPA. Issuance of an Ohio EPA Construction General Storm Water Permit does not authorize the installation of any sewerage system where Ohio EPA has not approved a PTI.

OHIO EPA PERMIT NO. OHC000005

PART III G. SWP3 REQUIREMENTS

a. COMMERCIAL BUILDING EXPANSION

b. TOTAL SITE AREA - 2.24 AC. - DISTURBED AREA = 3.07 AC.

c. PRE-CONSTRUCTION CURVE NUMBER - CN = 85;
POST-CONSTRUCTION CURVE NUMBER - CN = 85

d. IMPERVIOUS AREA = 0.99 AC. (ENTIRE SITE), PERCENT IMPERVIOUS = 44.2%.

e. SOIL TYPES:
CDB - CANFIELD SILT LOAM, 2 TO 6 PERCENT SLOPES
CDC2 - CANFIELD SILT LOAM, 6 TO 12 PERCENT SLOPES, ERODED

f. PRIOR LAND USE: VACANT LAND

g. CONSTRUCTION SEQUENCE - SEE IMPROVEMENT PLANS

h. UNNAMED TRIBUTARY TO TUSCARAWAS RIVER

- NO WETLANDS

i. NOT SUBDIVIDED (MEASURES IDENTIFIED ON PLANS)

j. NOT APPLICABLE

k. PERMIT REQUIREMENTS ATTACHED. (FIELD COPY)

l. IDENTIFIED ON SHEET C109

m. IDENTIFIED ON SHEET C109

n. SITE MAP SHOWN ON PLANS

(i) LIMITS OF CONSTRUCTION IDENTIFIED ON THE PLANS (LC).

(ii) SOIL TYPES IDENTIFIED ON THE PLANS

(iii) DRAINAGE WATER SHEDS IDENTIFIED ON THE PLANS.

(iv) THERE ARE NO WETLANDS ON THE SITE. NO SPRINGS, LAKES OR WATER WELLS WITHIN 200 FEET OF THE SITE.

(v) EXISTING & PLANNED LOCATIONS OF BUILDINGS, ROADS, PARKING FACILITIES AND UTILITIES ARE IDENTIFIED ON THE PLANS.

(vi) EROSION AND SEDIMENT CONTROL PRACTICES ARE IDENTIFIED ON THE PLANS.

(vii) SEDIMENT & STORM WATER MANAGEMENT DATA IS IDENTIFIED ON THE PLANS.

(viii) PERMANENT STORM WATER MANAGEMENT PRACTICES ARE IDENTIFIED ON THE PLANS.

(ix) CEMENT TRUCK WASHOUT, DUMPSTER & VEHICLE FUELING AREA ARE IDENTIFIED ON THE PLANS.

(x) CONSTRUCTION ENTRANCE IS IDENTIFIED ON THE PLANS.

(xi) NOT APPLICABLE

2. A. NOT APPLICABLE.

B. TEMPORARY SEEDING AND PERMANENT SEEDING MEASURES ARE IDENTIFIED ON THE PLANS.

(I) TABLE 1 & TABLE 2 HAVE BEEN IDENTIFIED ON THE PLANS.

(II)NOT APPLICABLE.

C. SHEET FLOW RUNOFF HAS BEEN CONTROLLED BY MEANS OF SILT FENCE AND DIRECTED TOWARDS UNDISTURBED SOILS. POINT DISCHARGES HAVE BEEN CONTAINED WITHIN STORM SEWERS.

D. SEDIMENT CONTROL HAS BEEN MANAGED BY MEANS OF SILT FENCE.

(I) NOTED THROUGHOUT THE PLANS.

(II) SILT FENCE UTILIZED.

(III) SILT FENCE IS IDENTIFIED ON THE PLANS.

(IV) INLET PROTECTION IS IDENTIFIED ON THE PLANS.

(V) NOT APPLICABLE.

(VI) NOTED ON THE IMPROVEMENT PLANS.

E. POST-CONSTRUCTION MAINTENANCE AND INSPECTION IS IDENTIFIED ON THE PLANS.

LARGE CONSTRUCTION ACTIVITIES - NOT APPLICABLE

SMALL CONSTRUCTION ACTIVITIES - RATIONALE IDENTIFIED ON PLANS

F. SURFACE WATER PROTECTION - NOT APPLICABLE

G. OTHER CONTROLS

(I) CEMENT TRUCK WASHOUT AREA IS IDENTIFIED ON THE PLANS.

(II)DUST CONTROL MEASURES AND VEHICLE TRACKING ARE IDENTIFIED ON THE PLANS.

(III) ADDITIONAL NOTES ARE IDENTIFIED ON THE PLANS.

(IV) NOTED ON THE PLANS.

(V) NOTED ON THE PLANS.

H. NOTED THROUGHOUT THE PLANS.

I. INSPECTION FREQUENCY AND INSPECTION CHECKLIST IS NOTED ON THE PLANS.

(I) NOTED ON THE PLANS.

(II) NOTED ON THE PLANS.

(III) STATEMENT NOTED.

3. APPROVED STATE OR LOCAL PLANS

STATEMENT NOTED.

4. EXCEPTIONS

STATEMENT NOTED.

CONSTRUCTION SEQUENCE

(ALL ITEMS ARE TO BE THE RESPONSIBILITY OF THE GENERAL SITE CONTRACTOR)

CONTACT STARK SOIL & WATER CONSERVATION DISTRACT TO SCHEDULE A PRE-CONSTRUCTION MEETING AT 330-451-7644 PRIOR TO ANY EARTH MOVING ACTIVITY

CONTRACTOR SHALL BE RESPONSIBLE TO OBTAIN CO-PERMITEE COVERAGE ON THE OHIO EPA NPDES PERMIT FURTHER SITE PRIOR TO ANY EARTH MOVING ACTIVITY

SITE PREPARATION

NOTE:

PROVIDE SAFE AND SECURE PEDESTRIAN AND VEHICULAR TRAFFIC CIRCULATION THROUGHOUT THE ENTIRETY OF THE CONSTRUCTION SEQUENCE WITH WELL DEFINED CONSTRUCTION BOUNDARIES TO BE ACCESSED BY CONSTRUCTION PERSONNEL ONLY. ALL EROSION CONTROLS ARE TO BE THOROUGHLY INSPECTED BY THE CONTRACTOR UPON THE COMPLETION OF EACH WORK DAY AND MAINTAINED THROUGHOUT THE REQUIRED LIFE OF THE CONTROL, AS SPECIFIED BY THE APPROVED EROSION AND SEDIMENTATION CONTROL PLANS AND NARRATIVE. THE CONTRACTOR MUST REVIEW THE APPROVED EROSION AND SEDIMENTATION CONTROL PLANS AND NARRATIVE. THE CONTRACTOR MUST REVIEW THE APPROVED NPDES PERMIT AND SIGN THE PERMIT TO ACCEPT RESPONSIBILITIES AS THE CO-PERMITEE.

INITIAL PHASE (WITHIN 7 DAYS OF START OF GRUBBING)

1. INSTALL A TEMPORARY CONSTRUCTION ENTRANCE FOR ACCESS TO CONSTRUCTION AREAS OF SITE.
2. SETUP CONSTRUCTION TRAILER ON SITE AND ESTABLISH TEMPORARY POWER AND TELEPHONE SERVICE AS NECESSARY.
3. ALL TEMPORARY UTILITY SERVICES SHALL BE THE RESPONSIBILITY OF THE CONTRACTOR.
4. STAKEOUT LIMITS OF DISTURBANCE.
5. INSTALL TEMPORARY INLET PROTECTION ON ALL EXISTING CATCH BASINS WITHIN LIMITS OF CONSTRUCTION. REMOVE SILT PROTECTION FROM DESIGNATED INLETS ONLY WHEN INLET STRUCTURE IS TO BE REMOVED AS REQUIRED BY PROGRESSION OF CONSTRUCTION. REFER TO PLANS FOR IDENTIFICATION OF INLET STRUCTURES TO BE REMOVED.
6. INSTALL ALL FILTER FABRIC FENCE WHERE SHOWN ON PLANS.
7. BEGIN SITE CLEARING.
8. REMOVE TOPSOIL FROM AREAS OF BUILDING AND PAVEMENT.
9. CONSTRUCT STORM WATER BASIN.
10. BEGIN EARTHWORK OPERATIONS.
11. CONSTRUCT STORM WATER DIVERSION AS A FIRST STEP
12. IN THE EVENT OF RAIN, ALLOW STANDING WATER TO SETTLE PRIOR TO PUMPING. UTILIZE THE PUMPING SYSTEMS TO PUMP POLLUTED WATER PER E.P.A. REQUIREMENTS. ALLOW ONLY CLEAN WATER TO BE DISCHARGED TO THE EXISTING DRAINAGE SYSTEM. REMOVE SILT FROM BASINS AS NECESSARY PRIOR TO CONTINUING EARTHWORK. MATERIAL SHOULD BE MECHANICALLY SPREAD AND DRIED PRIOR TO INCORPORATION INTO THE EARTHWORK PROCEDURES. ADEQUACY OF THE DRIED MATERIAL IS TO BE DETERMIND BY A GEOTECHNICAL ENGINEER. THE CONTRACTOR SHALL BE RESPONSIBLE AND ENSURE THAT PROPER MECHANISMS ARE IN PLACE TO CONTROL WASTE MATERIALS. CONSTRUCTION WASTES INCLUDES, BUT ARE NOT LIMITED TO, EXCESS SOIL MATERIALS, BUILDING MATERIALS, CONCRETE WASH WATER, SANITARY WASTES, ETC., THAT COULD ADVERSELY IMPACT WATER QUALITY. MEASURES SHALL BE PLANNED AND IMPLEMENTED FOR HOUSEKEEPING, MATERIALS MANAGEMENT, AND LITTER CONTROL. WHEREVER POSSIBLE, RECYCLING OF EXCESS MATERIALS IS PREFERRED, RATHER THAN DISPOSAL.

INTERIM PHASE GENERAL CONSTRUCTION

1. MAINTAIN TEMPORARY CONTROLS UNTIL REMOVAL IS WARRANTED DUE TO PROGRESSION OF WORK.
2. BEGIN EARTHMOVING OPERATIONS. CONTRACTOR IS RESPONSIBLE FOR NOTIFYING THE COUNTY CONSERVATION DISTRICT OF LOCATION AND EROSION AND SEDIMENTATION CONTROL MEASURES IMPLEMENTED AT BORROW OR SPOIL SITE OF IMPORT/EXPORT MATERIAL. THE CONTRACTOR IS TO COORDINATE WITH OWNER THE PLACEMENT OF SUCH MEASURES.
3. STORM SEWER, SANITARY SEWER, WATER LINE AND UTILITY LINE CONSTRUCTION MAY BEGIN IMMEDIATELY FOLLOWING ESTABLISHMENT OF GRADE AND WITH THE PERMISSION OF THE OWNER.
4. STABILIZE ALL UTILITY TRENCHES AT THE END OF EACH WORKDAY BY MEANS OF GRAVEL BACKFILL TO SURFACE, REPAVING OR MULCHING.
5. REPLACE TOPSOIL, FINE GRADE AND SEED AS REQUIRED.
6. STABILIZE ALL DISTURBED AREAS WITH PERMANENT SEED AND MULCHING OR CROWNVETCH SEEDING IMMEDIATELY UPON REACHING FINAL GRADE.
7. INSTALL PAVEMENT SUBBASE.
8. BEGIN BITUMINOUS PAVING, REMOVING TEMPORARY CONSTRUCTION ENTRANCE ONLY WHEN NECESSARY.
9. RESEED AND REDRESS ANY AREAS THAT MAY REQUIRE ATTENTION IMMEDIATELY. NOTE THAT LAWN AREAS WILL NOT BE DEEMED STABLE UNTIL A UNIFORM 80% COVERAGE IS ACHIEVED.
10. ALL EROSION MEASURES SHALL REMAIN IN PLACE UNTIL THE SITE IS STABILIZED. ALL AREAS OF VEGETATIVE SURFACE STABILIZATION, WHETHER TEMPORARY OR PERMANENT, SHALL BE CONSIDERED TO BE IN PLACE AND FUNCTIONAL WHEN THE REQUIRED UNIFORM RATE OF COVERAGE (80%) IS OBTAINED.

FINAL PHASE POST-PAVING BASIN CONVERSION

1. IF, FOR ANY REASON, THE PROJECT IS SUSPENDED, THE CONTRACTOR SHALL INSURE THAT ALL INSTALLED EROSION MEASURES ARE FUNCTIONING AND PROPERLY MAINTAINED DURING THIS PERIOD, AND THAT ALL BARED SOILS ARE SEEDED AND MULCHED WITH TEMPORARY SEED MIXTURE.
2. THE FOLLOWING ITEMS MUST BE COMPLETED BY THE CONTRACTOR, IN ORDER, ONCE THE SITE HAS BEEN DEEMED STABLE:
   - A. REMOVE SEDIMENT CONTROL DEVICES AND ESTABLISH WATER QUALITY CONTROL ORIFICE.
   - B. REMOVE TEMPORARY CONSTRUCTION ENTRANCE PRIOR TO COMPLETION OF PAVING.
   - C. SITE CLEAN UP.
   - D. RESEED ANY AREAS THAT REQUIRE ADDITIONAL SEED
   - E. FILTER FENCES ARE TO BE CLEANED, REMOVED, BACKFILLED AND SEEDED WITH PERMANENT SEEDING.
   - F. VERIFY POSITIVE CONVEYANCE FLOW IN ALL DRAINAGE STRUCTURES.

SPECIFICATIONS FOR TEMPORARY SEEDING

TEMPORARY SEEDING SPECIES SELECTION			
SEEDING DATES	SPECIES	LB/100 FT^2	LB/ACRE
MARCH 1 TO AUGUST 15	OATS TALL FESCUE ANNUAL RYEGRASS	3 1 1	128 (4 BUSHEL) 40 40
	PERENNIAL RYEGRASS TALL FESCUE ANNUAL RYEGRASS	1 1 1	40 40 40
	ANNUAL RYEGRASS PERENNIAL RYEGRASS CREEPING RED FESCUE KENTUCKY BLUEGRASS	1.25 3.25 0.4 0.4	55 142 17 17
AUGUST 16TH TO NOVEMBER	OATS TALL FESCUE ANNUAL RYEGRASS	3 1 1	128 (3 BUSHELS) 40 40
	RYE TALL FESCUE ANNUAL RYEGRASS	3 1 1	112 (2 BUSHEL) 40 40
	WHEAT TALL FESCUE ANNUAL RYEGRASS	3 1 1	120 (BUSHEL) 40 40
	PERENNIAL RYE TALL FESCUE ANNUAL RYEGRASS	1 1 1	40 40 40
	ANNUAL RYEGRASS PERENNIAL RYEGRASS CREEPING RED FESCUE KENTUCKY BLUEGRASS	1.25 3.25 0.4 0.4	40 40 40 40
NOVEMBER 1 TO FEB. 29	USE MULCH ONLY FOR DORMANT SEEDING		

NOTE: OTHER APPROVED SPECIES MAY BE SUBSTITUTED

1. STRUCTURAL EROSION AND SEDIMENT CONTROL PRACTICES SUCH AS DIVERSIONS AND SEDIMENT TRAPS SHALL BE INSTALLED AND STABILIZED WITH TEMPORARY SEEDING PRIOR TO GRADING THE REST OF THE CONSTRUCTION-SITE.
2. TEMPORARY SEED SHALL BE APPLIED BETWEEN CONSTRUCTION OPERATIONS ON SOIL THAT WILL NOT BE ACTIVELY WORKED FOR 14 DAYS OR MORE. THESE IDLE AREAS SHOULD BE SEEDED AS SOON AS POSSIBLE AFTER GRADING OR SHALL BE SEEDED WITHIN 7 DAYS. SEVERAL APPLICATIONS OF TEMPORARY SEEDING ARE NECESSARY ON TYPICAL CONSTRUCTION PROJECTS.
3. THE SEEDBED SHALL BE PULVERIZED AND LOOSE TO ENSURE THE SUCCESS OF ESTABLISHING VEGETATION. HOWEVER, TEMPORARY SEEDING SHALL NOT BE POSTPONED IF IDEAL SEEDBED PREPARATION IS NOT POSSIBLE.
4. SOIL AMENDMENTS--APPLICATIONS OF TEMPORARY VEGETATION SHALL ESTABLISHED ADEQUATE STANDS OF VEGETATION WHICH MAY REQUIRE THE USE OF SOIL AMENDMENTS. SOIL TESTS SHOULD BE TAKEN ON THE SITE TO PREDICT THE NEED FOR LIME AND FERTILIZER.
5. SEEDING METHOD--SEED SHALL BE APPLIED UNIFORMLY WITH A CYCLONE SEEDER, DRILL, CULTIPACKER SEEDER, OR HYDROSEEDER. WHEN FEASIBLE, SEED THAT HAS BEEN BROADCAST SHALL BE COVERED BY RAKING OR DRAGGING AND THEN LIGHTLY TAMPED INTO PLACE USING A ROLLER OR CULTIPACKER. IF HYDROSEEDING IS USED, THE SEED AND FERTILIZER WILL BE MIXED ON-SITE AND THE SEEDING SHALL BE DONE IMMEDIATELY AND WITHOUT INTERRUPTION.

MULCHING TEMPORARY SEEDING

1. APPLICATIONS OF TEMPORARY SEEDING SHALL INCLUDE MULCH WHICH SHALL BE APPLIED DURING OR IMMEDIATELY AFTER SEEDING. SEEDINGS MADE DURING OPTIMUM SEEDING DATES AND WITH FAVORABLE SOIL CONDITIONS AND ON VERY FLAT SOIL CONDITIONS MAY NOT NEED MULCH TO ACHIEVE ADEQUATE STABILIZATION.
2. MATERIALS: STRAW--IF STRAW IS USED, IT SHALL BE UNROTTED SMALL-GRAIN APPLIED AT 2 TONS/AC. OR 90 LB. / 1,000 SQ. FT. (TWO TO THREE BALES). THE MULCH SHALL BE SPREAD UNIFORMLY BY HAND OR MECHANICALLY SO THE SOIL SURFACE IS COVERED. FOR UNIFORM DISTRIBUTION OF HAND-SPREAD MULCH, DIVIDE AREA INTO APPROXIMATELY 1,000 SQ. FT. SECTIONS AND SPREAD TWO 45 LB. BALES OF STRAW IN EACH SECTION. HYDROSEEDERS--IF WOOD CELLULOSE FIBER IS USED, IT SHALL BE USED AT 2,000 LB. / AC. OR 46 LB. /1,000 SQ. FT. OTHER--OTHER ACCEPTABLE MULCHES INCLUDE MULCH MATTINGS APPLIED ACCORDING TO MANUFACTURER'S RECOMMENDATIONS OR WOOD CHIPS APPLIED AT 6 TONS / AC.
3. STRAW MULCH SHALL BE ANCHORED IMMEDIATELY TO MINIMIZE LOSS BY WIND OR WATER. ANCHORING METHODS: MECHANICAL--A DISK, CRIMPER OR SIMILAR TYPE TOOL SHALL BE SET STRAIGHT TO PUNCH OR ANCHOR THE MULCH MATERIAL INTO THE SOIL. STRAW MECHANICALLY ANCHORED SHALL NOT BE FINELY CHOPPED BUT, GENERALLY BE LEFT LONGER THAN 6 IN. MULCH NETTINOS--NETTINGS SHALL BE USED ACCORDING TO THE MANUFACTURER'S RECOMMENDATIONS. NETTING MAY BE NECESSARY TO HOLD MULCH IN PLACE IN AREAS OF CONCENTRATED RUNOFF AND ON CRITICAL SLOPES. SYNTHETIC BINDERS--SYNTHETIC BINDERS SUCH AS ACRYLIC DLR (AGRI-TAC), DCA-70, PETROSET, TERRA-TACK OR EQUAL MAY BE USED AT RATES RECOMMENDED BY THE MANUFACTURER. WOOD-CELLULOSE FIBRE--WOOD-CELLULOSE FIBER BINDER SHALL BE APPLIED AT A NET DRY WEIGHT OF 750 LB. /AC. THE WOOD-CELLULOSE FIBER SHALL BE MIXED WITH WATER AND THE MIXTURE SHALL CONTAIN A MAXIMUM OF 50 LB. / 100 GAL.

BMP INSPECTION CHECKLIST

BMP	FREQUENCY	NOTES
GENERAL INSPECTION	EVERY 6 MO.	
STORM WATER BASIN	MONTHLY	
VEGETATION	MONTHLY	FIRST 2 GROWING SEASONS THEN TWICE A YEAR
SILT FENCE	MONTHLY	FIRST GROWING SEASON

REGULAR INSPECTION AND MAINTENANCE WILL BE PROVIDED FOR ALL EROSION AND SEDIMENT CONTROL PRACTICES. PERMANENT RECORDS OF MAINTENANCE AND INSPECTIONS MUST BE KEPT THROUGHOUT THE CONSTRUCTION PERIOD. INSPECTIONS MUST BE MADE A MINIMUM OF ONCE EVERY 7 DAYS AND IMMEDIATELY AFTER STORM EVENTS GREATER THAN 0.5 INCHES OF RAIN IN A 24 HOUR PERIOD. PROVIDED WILL BE NAME OF INSPECTOR, MAJOR OBSERVATIONS, DATED OF INSPECTION AND CORRECTIVE MEASURES TAKEN. RECORDS SHALL L BE SUBMITTED TO THE CITY OF MASSILLON ENGINEERING DEPARTMENT FOR REVIEW BY MAY 1st OF EACH YEAR.

ALL CONTROL PRACTICES THAT REQUIRE REPAIR SHALL BE REPAIRED WITHIN THREE (3) DAYS OF THE INSPECTION.

ADDITIONAL SWP3 CONSIDERATIONS

NO OPEN BURNING

DUST CONTROL SHALL BE ACHIEVED BY USE OF WATERING TRUCKS. USE OF OIL IS STRICTLY PROHIBITED. INLET PROTECTION MUST BE IMPLEMENTED PRIOR TO DUST CONTROL MEASURES.

IN THE EVENT OF A PETROLEUM SPILL (>25 GALLONS) OR THE PRESENCE OF OIL SHEEN, THE CONTRACTOR SHALL CONTACT THE OHIO E.P.A. AT 800-282-9378, THE LOCAL FIRE DEPARTMENT.

SMALL SPILLS (<25 GALLONS) SHALL BE CLEANED UP USING AN ABSORBING AGENT, THE ABSORBING AGENT REMOVED AND DISPOSED OF ACCORDING TO FEDERAL REGULATIONS.

ALL TRENCH DEWATERING MEASURES SHALL BE DISCHARGED INTO SETTLING BASINS PRIOR TO DISCHARGE FROM SITE. BMP'S THAT REQUIRE REPAIR SHALL BE REPAIRED WITHIN 3 DAYS OF INSPECTION. SETTLING PONDS MUST BE REPAIRED WITHIN 10 DAYS OF INSPECTION.

STREETS ADJACENT TO SITE SHALL BE CLEANED AT THE END OF EACH WORK DAY.

POST-CONSTRUCTION BMP RATIONALE

STORM WATER MANAGEMENT AND POST CONSTRUCTION WATER QUALITY BMP'S HAVE BEEN ADDRESSED BY MEANS OF AN ON-SITE STORM WATER MANAGEMENT/WATER QUALITY BASIN.

MAINTENANCE FOR PERMANENT SEEDINGS FERTILIZATION AND MOWING					
MIXTURE	FORMULA	LBS./ACRE	LBS./1,000 SQ. FT	TIME	MOWING
CREEPING RE FESCUE RYEGRASS KEENTCKY BLUEGRASS	10-10-10	500	12	FALL, YEARLY AS NEEDED	NOT CLOSER THAN 3"
TALL FESCUE	10-10-10	500	12		NOT CLOSER THAN 4"
TURF-TYPE FESCUE	10-10-10	500	12		
CROWN VETCH FESCUE	0-20-20	400	10	SPRING, YEARLY FOLLOWING ESTABLISHMENT AND EVERY 4-7 YEARS THEREAFTER	DO NOT MOW
FLAT PEA FESCUE	0-20-20	400	10		DO NOT MOW

NOTE: FOLLOWING SOIL TEST RECOMMENDATIONS IS PREFERRED TO FERTILIZER RATES SHOWN ABOVE.

SPECIFICATIONS FOR PERMANENT SEEDING

SITE PREPARATION

1. A SUBSOILER, PLOW OR OTHER IMPLEMENT SHALL BE USED TO REDUCE SOIL COMPACTION AND ALLOW MAXIMUM INFILTRATION. (MAXIMIZING INFILTRATION WILL HELP CONTROL BOTH RUNOFF RATE AND WATER QUALITY.) SUBSOILING SHOULD BE DONE WHEN THE SOIL MOISTURE IS LOW ENOUGH TO ALLOW THE SOIL TO CRACK OR FRACTURE. SUBSOILING SHALL NOT BE DONE ON SLIP-PRONE AREAS WHERE SOIL PREPARATION SHOULD BE LIMITED TO WHAT IS NECESSARY FOR ESTABLISHING VEGETATION.
2. THE SITE SHALL BE GRADED AS NEEDED TO PERMIT THE USE OF CONVENTIONAL EQUIPMENT FOR SEEDBED PREPARATION AND SEEDING.

NOTE:

3. TOPSOIL SHALL BE APPLIED WHERE NEEDED TO ESTABLISH VEGETATION. SEEDBED PREPARATION
   - a. LIME--AGRICULTURAL GROUND LIMESTONE SHALL BE APPLIED TO ACID SOIL AS RECOMMENDED BY A SOIL TEST. IN LIEU OF A SOIL TEST, LIME SHALL BE APPLIED AT THE RATE OF 100 LB./1,000 SQ. FT. OR 2 TONS/ACRE.
   - b. FERTILIZER--FERTILIZER SHALL BE APPLIED AS RECOMMENDED BY A SOIL TEST. IN LIEU OF A SOIL TEST, FERTILIZER SHALL BE APPLIED AT A RATE OF 25 LB./1,000 SQ. FT. OR 1000 LB./ACRE OF 10-10-10 OR 12-12-12 ANALYSIS.
   - c. THE LIME AND FERTILIZER SHALL BE WORKED INTO THE SOIL WITH A DISK HARROW, SPRING-TOOTH HARROW OR OTHER SUITABLE FIELD IMPLEMENT TO A DEPTH OF 3 INCHES. ON SLOPING LAND, THE SOIL SHALL BE WORKED ON THE CONTOUR.

EROSION PREVENTION PRACTICES

SEEDING DATES AND SOIL CONDITIONS

SEEDING SHOULD BE DONE MARCH 1 TO MAY 31 OR AUG 1 TO SEPTEMBER 30. IF SEEDING OCCURS OUTSIDE OF THE ABOVE SPECIFIED DATES, ADDITIONAL MULCH AND IRRIGATION MAY BE REQUIRED TO ENSURE A MINIMUM OF 80% GERMINATION. TILLAGE FOR SEEDBED PREPARATION SHOULD BE DONE WHEN SOIL IS DRY ENOUGH TO CRUMBLE AND NOT FORM RIBBONS WHEN COMPRESSED BY HAND. FOR WINTER SEEDING, SEE THE FOLLOWING SECTION ON DORMANT SEEDING.

DORMANT SEEDING

1. SEEDINGS SHOULD NOT BE MADE FROM OCTOBER 1 THROUGH NOVEMBER 20. DURING THIS PERIOD, THE SEEDS ARE LIKELY TO GERMINATE BUT PROBABLY WILL NOT BE ABLE TO SURVIVE THE WINTER.
2. THE FOLLOWING METHODS MAY BE USED FOR "DORMANT SEEDING":

- FROM OCTOBER 1 THROUGH NOVEMBER 20, PREPARE THE SEEDBED, ADD THE REQUIRED AMOUNTS OF LIME AND FERTILIZER, THEN MULCH AND ANCHOR. AFTER NOVEMBER 20, BROADCAST THE SELECTED SEED MIXTURE AT A 50% INCREASE IN THE SEEDING RATE.
- FROM NOVEMBER 20 THROUGH MARCH 15, WHEN SOIL CONDITIONS PERMIT, PREPARE THE SEEDBED, LIME AND FERTILIZE, APPLY THE SELECTED SEED MIXTURE, MULCH AND ANCHOR. INCREASE THE SEEDING RATES BY 50% FOR THIS TYPE OF SEEDING.
- APPLY SEED UNIFORMLY WITH A CYCLONE SEEDER, DRILL, CULTIPACKER SEEDER OR HYDRO-SEEDER (SLURRY MAY INCLUDE SEED AND FERTILIZER) ON A FIRM, MOIST SEEDBED.
- WHERE FEASIBLE, EXCEPT WHEN A CULTIPACKER TYPE SEEDER IS USED, THE SEEDBED SHOULD BE FIRMED FOLLOWING SEEDING OPERATIONS WITH A CULTIPACKER, ROLLER OR LIGHT DRAG. ON SLOPING LAND, SEEDING OPERATIONS SHOULD FOLLOW THE CONTOUR WHERE FEASIBLE.

MULCHING

1. MULCH MATERIAL SHALL BE APPLIED IMMEDIATELY AFTER SEEDING. DORMANT SEEDING SHALL BE MULCHED. 100% OF THE GROUND SURFACE SHALL BE COVERED WITH AN APPROVED MATERIAL.
2. MATERIALS

STRAW--IF STRAW IS USED IT SHALL BE UNROTTED SMALL-GRAIN STRAW APPLIED AT THE RATE OF 2 TONS/ACRE OR 90 LB./1,000 SQ.FT. (TWO TO THREE BALES). THE MULCH SHALL BE SPREAD UNIFORMLY BY HAND OR MECHANICALLY SO THE SOIL SURFACE IS COVERED. FOR UNIFORM DISTRIBUTION OF DIVIDE AREA INTO APPROXIMATELY 1,000-SQ.-FT. HAND-SPREAD MULCH, SECTIONS AND SPREAD TWO 45-LB. BALES OF STRAW IN EACH SECTION.

HYDROSEEDERS--IF WOOD CELLULOSE FIBER IS USED, IT SHALL BE USED AT 2,000 LB./ACRE. OR 46 LB./1,000 SQ. FT.

OTHER--OTHER ACCEPTABLE MULCHES INCLUDE ROLLED EROSION CONTROL MATTINGS OR BLANKETS APPLIED ACCORDING TO MANUFACTURER'S RECOMMENDATIONS OR WOOD CHIPS APPLIED AT 6 TONS/ACRE.

3. STRAW AND MULCH ANCHORING METHODS

STRAW MULCH SHALL BE ANCHORED IMMEDIATELY TO MINIMIZE LOSS BY WIND OR WATER.

MECHANICAL--A DISK, CRIMPER OR SIMILAR TYPE TOOL SHALL BE SET STRAIGHT TO PUNCH OR ANCHOR THE MULCH MATERIAL INTO THE SOIL. STRAW MECHANICALLY ANCHORED SHALL NOT BE FINELY CHOPPED BUT GENERALLY LEFT LONGER THAN 6 IN.

MULCH NETTINGS-NETTINGS SHALL BE USED ACCORDING TO THE MANUFACTURER'S RECOMMENDATIONS. NETTING MAY BE NECESSARY TO HOLD MULCH IN PLACE IN AREAS OF CONCENTRATED RUNOFF AND ON CRITICAL SLOPES.

SYNTHETIC BINDERS-SYNTHETIC BINDERS SUCH AS ACRYLIC DLR (AGRI-TAC), DCA-70, PETROSET, TERRA TACK OR EQUIVALENT MAY BE USED AT RATES SPECIFIED BY THE MANUFACTURER.

EROSION PREVENTION PRACTICES

WOOD CELLULOSE FIBER--WOOD CELLULOSE FIBER BINDER SHALL BE APPLIED AT A NET DRY WEIGHT OF 750 LBS./ACRE. THE WOOD CELLULOSE FIBER SHALL BE MIXED WITH WATER WITH THE MIXTURE CONTAINING A MAXIMUM OF 50 LBS. CELLULOSE/100 GALLONS OF WATER.

IRRIGATION

1. PERMANENT SEEDING SHALL INCLUDE IRRIGATION TO ESTABLISH VEGETATION DURING DRY WEATHER OR ON ADVERSE SITE CONDITIONS, WHICH REQUIRE ADEQUATE MOISTURE FOR SEED GERMINATION AND PLANT GROWTH.
2. IRRIGATION RATES SHALL BE MONITORED TO PREVENT EROSION AND DAMAGE TO SEEDED AREAS FROM EXCESSIVE RUNOFF.

| PERMANENT SEEDING | |

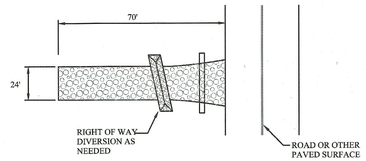

CONSTRUCTION ENTRANCE PLAN

REFERENCE ONLY NOT TO SCALE

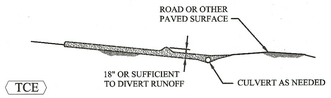

TCE

CONSTRUCTION ENTRANCE PROFILE

REFERENCE ONLY NOT TO SCALE

1. STONE SIZE - ODOT #2 (1.5-2.5 INCH) STONE SHALL BE USED, OR RECYCLED CONCRETE EQUIVALENT.
2. LENGTH- THE CONSTRUCTION ENTRANCE SHALL BE AS LONG AS REQUIRED TO STABALIZE HIGH TRAFFIC AREAS BUT NOT LESS THAN 70 FT. (EXCEPTION: APPLY 30 FT. MINIMUM TO SINGLE RESIDENCE LOTS.)
3. THICKNESS- THE STONE LAYER SHALL BE AT LEAST 6 INCHES THICK FOR LIGHT DUTY ENTRANCES OR AT LEAST 10 INCHES FOR HEAVY DUTY USE.
4. WIDTH- THE ENTRANCE SHALL BE AT LEAST 14 FEET WIDE, BUT NOT LESS THAN THE FULL WIDTH AT POINTS WHERE INGRESS OR EGRESS OCCURS.
5. GEOTEXTILE- A GEOTEXTILE SHALL BE LAID OVER THE ENTIRE AREA PRIOR TO PLACING STONE . IT SHALL BE COMPOSED OF STRONG ROT-PROOF POLYMERIC FIBERS AND MEET THE FOLLOWING SPECIFICATIONS.

GEOTEXTILE SPECIFICATION FOR CONSTRUCTION ENTRANCE	
MINIMUM TENSILE STRENGTH	200 LBS.
MINIMUM PUNCTURE STRENGTH	80 PSI.
MINIMUM TEAR STRENGTH	50 LBS.
MINIMUM BURST STENGTH	320 PSI.
MINIMUM ELONGATION	20%
EQUIVALENT OPENING SIZE	EOS<0.6MM.
PERMITTIVITY	1X10^3 CM/SEC.

6. TIMING- THE CONSTRUCTION ENTRANCE SHALL BE INSTALLED AS SOON AS IS PRACTICABLE BEFORE MAJOR GRADING ACTIVITIES.
7. CULVERT- A PIPE OR CULVERT SHALL BE CONSTRUCTED UNDER THE ENTRANCE IF NEEDED TO PREVENT SURFACE WATER FROM FLOWING ACROSS THE ENTRANCE OR TO PREVENT RUNOFF FROM BEING DIRECT OUT ONTO PAVED SURFACES.
8. WATER BAR- A WATER BAR SHALL BE CONSTRUCTED AS PART OF THE CONSTRUCTION ENTRANCE IF NEEDED TO PREVENT SURFACE RUNOFF FROM FLOWING THE LENGTH OF THE CONSTRUCTION ENTRANCE AND OUT ONTO PAVED
9. SURFACES.

MAINTENANCE- TOP DRESSING OF ADDITIONAL STONE SHALL BE APPLIED AS CONDITIONS DEMAND. MUD SPILLED, DROPPED, WASHED OR TRACKED ONTO PUBLIC ROADS, OR ANY SURFACE WHERE RUNOFF IS NOT CHECKED BY SEDIMENT CONTROLS,

10. SHALL BE REMOVED IMMEDIATELY. REMOVAL SHALL BE ACCOMPLISHED BY SCRAPING OR SWEEPING.

CONSTRUCTION ENTRANCES SHALL NOT BE RELIED UPON TO REMOVE MUD FROM VEHICLES AND

11. PREVENT OFF-SITE TRACKING. VEHICLES THAT ENTER AND LEAVE THE CONSTRUCTION-SITE SHALL BE RESTRICTED FROM MUDDY AREAS.

REMOVAL- THE ENTRANCE SHALL REMAIN IN PLACE UNTIL THE DISTURBED AREA IS STABILIZED OR REPLACED WITH A PERMANENT ROADWAY OR ENTRANCE.

TCE

SPECIFICATIONS FOR CONSTRUCTION ENTRANCE

REQUIREMENTS FOR GEOTEXTILES

PROPERTY	TEST METHOD	WOVEN- CLASS 1	NONWOVEN-I
TENSILE STRENGTH (POUNDS) 1/	ASTM C 4632 GRAB TEST	200 MINIMUM IN ANY PRINCIPAL DIRECTION	180 MINIMUM
ELONGATION AT FAILURE (PERCENT) 1/	ASTM D 4632 GRAB TEST	<50	> 50
PUNCTURE (POUNDS) 1/	ASTM D 4833	90 MINIMUM	80 MINIMUM
ULTRAVIOLET LIGHT (% RESIDUAL TENSILE STRENGTH)	ASTM D 4355 150-HR EXPOSURE	70 MINIMUM	70 MINIMUM
APPARENT OPENING SIZE (AOS)	ASTM D 4751	AS SPECIFIED, BUT NO SMALLER THAN .212 (#70) 2/	AS SPECIFIED MAX. #40 2/
PERCENT OPEN AREA (PERCENT)	CWO-02215-86	4.0 MINIMUM	-------
PERMITIVITY SEC-1	ASTM D 4491	0.10 MINIMUM	0.70 MINIMUM

1. MINIMUM AVERAGE ROLL VALUE (WEAKEST PRINCIPAL DIRECTION).
2. U.S. STANDARD SIEVE SIZE
NOTE: CWO IS A USACE REFERENCE

RIPRAP SIZE CHART

TYPE OF ROCK OR RIPRAP (ODOT)	"N" VALUE	SIZE OF ROCK	
		50%	85%
TYPE D	.036	>6 IN.	3-12 IN.
TYPE C	.04	>12 IN.	6-18 IN.
TYPE B	.043	>18 IN.	12-24 IN.
TYPE A	.045	>24 IN.	18-30 IN.

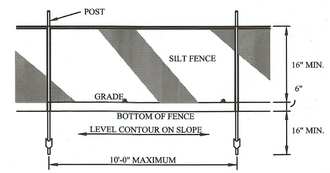

SF

SILT FENCE DETAIL

REFERENCE ONLY NOT TO SCALE

JOINING SECTIONS OF SILT FENCE DETAIL

REFERENCE ONLY NOT TO SCALE

SF

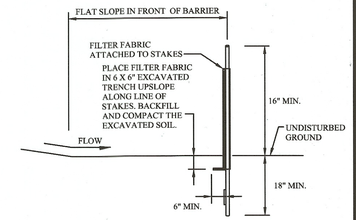

SF

SILT FENCE SECTION

REFERENCE ONLY NOT TO SCALE

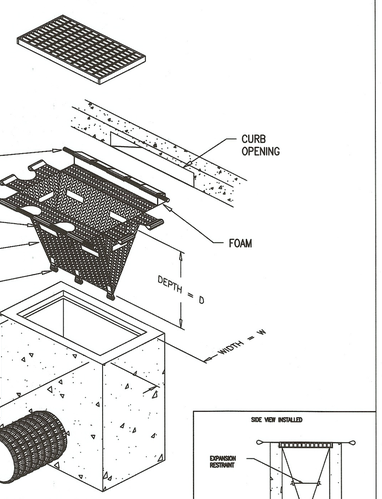

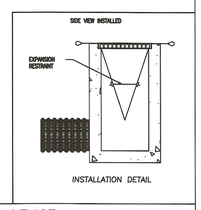

INLET PROTECTION NOTE

1. THE TYPICAL INLET SILT FENCE DETAIL SHALL REMAIN IN PLACE UNTIL PAVEMENT IS ESTABLISHED.
2. ONCE PAVEMENT HAS BEEN INSTALLED, THE INLETS WITHIN THE PAVING LIMITS MUST BE FITTED WITH THE "SILTSACK" SEDIMENT CONTROL DEVICE AS MANUFACTURED BY ACF ENVIROMENTAL CONTROL INC., OR APPROVED EQUAL.
3. SILT SACK MUST REMAIN IN PLACE UNTIL THE SITE HAS BEEN SEEDED & STABILIZED.

DETAIL OF INLET SEDIMENT CONTROL DEVICE
WITH CURB DEFLECTOR

IPSS

SILTSACK DETAIL

1. SILT FENCE SHALL BE CONSTRUCTED BEFORE UPSLOPE LAND DISTURBANCE BEGINS.
2. ALL SILT FENCE SHALL BE PLACED AS CLOSE TO THE CONTOUR AS POSSIBLE SO THAT WATER WILL NOT CONCENTRATE AT LOW POINTS IN THE FENCE AND SO THAT SMALL SWALES OR DEPRESSIONS WHICH MAY CARRY SMALL CONCENTRATED FLOWS TO THE SILT FENCE ARE DISSIPATED ALONG ITS LENGTH.
3. TO PREVENT WATER PONDED BY THE SILT FENCE FROM FLOWING AROUND THE ENDS, EACH END SHALL BE CONSTRUCTED UPSLOPE SO THAT THE ENDS ARE AT A HIGHER ELEVATION.
4. WHERE POSSIBLE, SILT FENCE SHALL BE PLACED ON THE FLATTEST AREA AVAILABLE.
5. WHERE POSSIBLE, VEGETATION SHALL BE PRESERVED FOR 5 FT. (OR AS MUCH AS POSSIBLE) UPSLOPE FROM THE SILT FENCE. IF VEGETATION IS REMOVED, IT SHALL BE REESTABLISHED WITHIN 7 DAYS FROM THE INSTALLATION OF THE SILT FENCE.
6. THE HEIGHT OF THE SILT FENCE SHALL BE A MIN. OF 16 IN. ABOVE THE ORIGINAL GROUND SURFACE.
7. THE SILT FENCE SHALL BE PLACED IN A TRENCH CUT A MIN. OF 6 IN. DEEP. THE TRENCH SHALL BE CUT WITH A TRENCHER, CABLE LAYING MACHINE, OR OTHER SUITABLE DEVICE WHICH WILL ENSURE AN ADEQUATELY UNIFORM TRENCH DEPTH.
8. THE SILT FENCE SHALL BE PLACED WITH THE STAKES ON THE DOWN SLOPE SIDE OF THE GEOTEXTILE AND SO THAT 8 IN. OF CLOTH ARE BELOW THE GROUND SURFACE. EXCESS MATERIAL SHALL LAY ON THE BOTTOM OF THE 6 IN. DEEP TRENCH. THE TRENCH SHALL BE BACKFILLED AND COMPACTED ON BOTH SIDES OF THE FABRIC.
9. SEAMS BETWEEN SECTIONS OF SILT FENCE SHALL BE SPLICED TOGETHER ONLY AT A SUPPORT POST WITH A MINIMUM 6-IN. OVERLAP PRIOR TO DRIVING INTO THE GROUND.
10. MAINTENANCE--SILT FENCE SHALL ALLOW RUNOFF TO PASS ONLY AS DIFFUSE FLOW THROUGH THE GEOTEXTILE. IF RUNOFF OVERTOPS THE SILT FENCE, FLOWS UNDER OR AROUND THE ENDS, OR IN ANY OTHER WAY BECOMES A CONCENTRATED FLOW, ONE OF THE FOLLOWING SHALL BE PERFORMED, AS APPROPRIATE: 1) THE LAYOUT OF THE SILT FENCE SHALL BE CHANGED, 2) ACCUMULATED SEDIMENT SHALL BE REMOVED, OR 3) OTHER PRACTICES SHALL BE INSTALLED.

SEDIMENT DEPOSITS SHALL BE ROUTINELY REMOVED WHEN THE DEPOSIT REACHES APPROXIMATELY ONE-HALF OF THE HEIGHT OF THE SILT FENCE.

SILT FENCES SHALL BE INSPECTED AFTER EACH RAINFALL AND AT LEAST DAILY DURING A PROLONGED RAINFALL. THE LOCATION OF EXISTING SILT FENCE SHALL BE REVIEWED DAILY TO ENSURE ITS PROPER LOCATION AND EFFECTIVENESS. IF DAMAGED, THE SILT FENCE SHALL BE REPAIRED IMMEDIATELY.

CRITERIA FOR SILT FENCE MATERIALS

1. FENCE POSTS-- THE LENGTH SHALL BE A MINIMUM OF 32 IN. LONG. WOOD POSTS WILL BE 2-BY-2 IN. HARDWOOD OF SOUND QUALITY. THE MAXIMUM SPACING BETWEEN POSTS SHALL BE 10 FT.
2. SILT FENCE FABRIC (SEE CHART BELOW):

MINIMUM CRITERIA FOR SILT FENCE FABRIC (ODOT, 2002)		
FABRIC PROPERTIES	VALUES	TEST METHOD
MINIMUM TENSILE STRENGTH	120 LBS. (535 N)	ASTM D 4362
MAXIMUM ELONGATION AT 60 LBS	50%	ASTM D 4632
MINIMUM PUNCTURE STRENGTH	50 LBS (220 N)	ASTM D 4833
MINIMUM TEAR STRENGTH	40 LBS (180 N)	ASTM D 4533
APPARENT OPENING SIZE	<.84 MM	ASTM D 4751
MINIMUM PERMITTIVITY	1X10^2 SEC^-1	ASTM D 4491
UV EXPOSURE STRNEGTH RETENTION	70%	ASTM D 4355

SF

SPECIFICATIONS FOR SILT FENCE

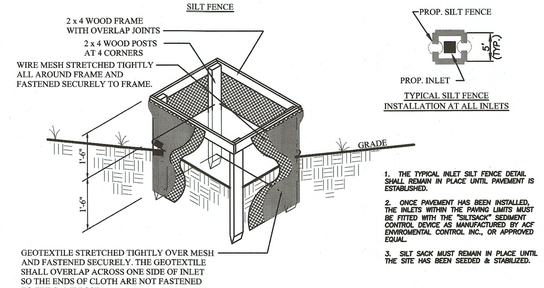

TYPICAL SILT FENCE
INSTALLATION AT ALL INLETS

1. THE TYPICAL INLET SILT FENCE DETAIL SHALL REMAIN IN PLACE UNTIL PAVEMENT IS ESTABLISHED.
2. ONCE PAVEMENT HAS BEEN INSTALLED, THE INLETS WITHIN THE PAVING LIMITS MUST BE FITTED WITH THE "SILTSACK" SEDIMENT CONTROL DEVICE AS MANUFACTURED BY ACF ENVIROMENTAL CONTROL INC., OR APPROVED EQUAL.
3. SILT SACK MUST REMAIN IN PLACE UNTIL THE SITE HAS BEEN SEEDED & STABILIZED.

1. INLET PROTECTION SHALL BE CONSTRUCTED EITHER BEFORE UPSLOPE LAND DISTURBANCE BEGINS OR BEFORE THE STORM INLET BECOMES FUNCTIONAL
2. THE EARTH AROUND THE INLET SHALL BE EXCAVATED COMPLETELY TO A DEPTH AT LEAST 18 INCHES.
3. THE WOODEN FRAME SHALL BE CONSTRUCTED OF 2-BY-4-IN. CONSTRUCTION-GRADE LUMBER. THE 2-BY-4-IN. POSTS SHALL BE DRIVEN 1 FT. INTO THE GROUND AT FOUR CORNERS OF THE INLET AND THE TOP PORTION OF 2-BY-4-IN. FRAME ASSEMBLED USING THE OVERLAP JOINT SHOWN. THE TOP OF THE FRAME SHALL BE AT LEAST 6 INCHES BELOW ADJACENT ROADS IF PONDED WATER WOULD POSE A SAFETY HAZARD TO TRAFFIC.
4. WIRE MESH SHALL BE OF SUFFICIENT STRENGTH TO SUPPORT FABRIC WITH WATER FULLY IMPOUNDED AGAINST IT. IT SHALL BE STRETCHED TIGHTLY AROUND THE FRAME AND FASTENED SECURELY TO THE FRAME.
5. GEOTEXTILE MATERIAL SHALL HAVE AN EQUIVALENT OPENING SIZE OF 20-40- SIEVE AND BE RESISTANT TO SUNLIGHT. IT SHALL BE STRETCHED TIGHTLY AROUND THE FRAME AND FASTENED SECURELY. IT SHALL EXTEND FROM TOP OF THE FRAME TO 18 INCHES BELOW THE INLET NOTCH ELEVATION. THE GEOTEXTILE SHALL OVERLAP ACROSS ON SIDE OF THE INLET SO THE ENDS OF THE CLOTH ARE NOT FASTENED TO THE SAME POST.
6. BACKFILL SHALL BE PLACED AROUND THE INLET IN COMPACTED 6-IN. LAYERS UNTIL THE EARTH IS EVEN WITH NOTCH ELEVATION ON ENDS AND TOP ELEVATION ON SIDES.
7. A COMPACTED EARTH DIKE OR A CHECK DAM SHALL BE CONSTRUCTED IN THE DITCH LINE BELOW THE INLET IF THE INLET IS NOT IN A DEPRESSION AND IF RUNOFF BYPASSING THE INLET WILL NOT FLOW TO A SETTLING POND. THE TOP OF EARTH DIKES SHALL BE AT LEAST 6 INCHES HIGHER THAN THE TOP OF THE FRAME.

MAINTENANCE

EFFECTIVE STORM DRAIN INLET PROTECTION COLLECTS SEDIMENT AND THEREFORE MUST BE CLEANED REGULARLY TO PREVENT CLOGGING AND SUBSEQUENT FLOODING CONDITIONS, PIPING, OR OVERTOPPING OF THE CONTROL STRUCTURES. SEDIMENT BARRIERS THAT SAG, FALL OVER, OR ARE NOT PROPERLY SECURED, MUST BE PROMPTLY REPAIRED OR REPLACED.

INLET PROTECTION SHALL BE INSPECTED WEEKLY AND AFTER EACH RAINFALL EVENT. AREAS WHERE THERE IS ACTIVE TRAFFIC SHALL BE INSPECTED DAILY. REPAIRS SHALL BE MADE AS NEEDED TO ASSURE THE PRACTICE IS PERFORMING AS INTENDED. SEDIMENT SHALL BE REMOVED WHEN ACCUMULATION IS ONE-HALF THE HEIGHT OF THE TRAP. SEDIMENT SHALL NOT BE WASHED INTO THE INLET. SEDIMENT SHALL BE REMOVED AND PLACED IN A LOCATION WHERE IT IS STABLE AND NOT SUBJECT TO EROSION.

ONCE THE CONTRIBUTING DRAINAGE AREA HAS BEEN PROPERLY STABILIZED, ALL FILTER MATERIAL AND COLLECTED SEDIMENT SHALL BE REMOVED AND PROPERLY DISPOSED.

IP

SPECIFICATIONS FOR GEOTEXTILE INLET PROTECTION

REFERENCE ONLY NOT TO SCALE

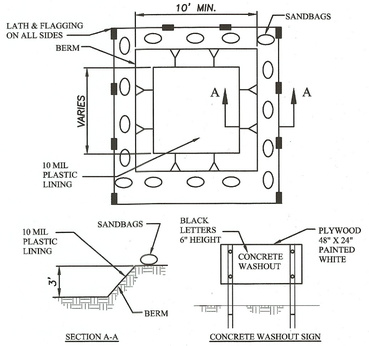

1. TEMPORARY CONCRETE WASHOUT FACILITIES SHALL BE LOCATED A MINIMUM OF 50 FT FROM STORM DRAIN INLETS, OPEN DRAINAGE FACILITIES, AND WATERCOURSES. FACILITY SHALL BE LOCATED AWAY FROM CONSTRUCTION TRAFFIC OR ACCESS AREAS TO PREVENT DISTURBANCE OR TRACKING.
2. TEMPORARY CONCRETE WASHOUT FACILITIES SHALL BE CONSTRUCTED AS SHOWN ON THE DETAIL WITH A MINIMUM LENGTH AND MINIMUM WIDTH OF 10'.
3. LATH AND FLAGGING SHALL BE COMMERCIAL TYPE.
4. PLASTIC LINING MATERIAL SHALL BE A MINIMUM OF 10 MIL POLYETHYLENE SHEETING AND SHALL BE FREE OF HOLES, TEARS, OR OTHER DEFECTS THAT COMPROMISE THE IMPERMEABILITY OF THE MATERIAL.
5. A SIGN SHALL BE INSTALLED ADJACENT TO WASHOUT FACILITY TO INFORM CONCRETE EQUIPMENT OPERATORS TO UTILIZE THE PROPER FACILITIES.
6. TEMPORARY CONCRETE WASHOUT FACILITIES SHALL HAVE A TEMPORARY PIT OR BERMED AREAS OF SUFFICIENT VOLUME TO COMPLETELY CONTAIN ALL LIQUID AND CONCRETE WASTE GENERATED BY WASHOUT PROCEDURES.
7. WASHOUT OF CONCRETE TRUCKS SHALL BE PERFORMED IN DESIGNATED AREAS ONLY.
8. ONLY CONCRETE FROM MIXER TRUCK CHUTES SHOULD BE WASHED INTO CONCRETE WASHOUT.
9. CONCRETE WASHOUT FROM CONCRETE PUMPER BINS CAN BE WASHED INTO CONCRETE PUMPER TRUCKS AND DISCHARGED INTO DESIGNATED WASHOUT AREA OR PROPERLY DISPOSED OF OFFSITE.
10. CONCRETE WASTES SHALL BE ALLOWED TO HARDEN THEN BROKEN UP, REMOVED, AND PROPERLY DISPOSED OF IN ACCORDANCE WITH LOCAL REGULATION ON A REGULAR BASIS.
11. WHEN TEMPORARY WASHOUT FACILITIES ARE NO LONGER REQUIRED FOR THE WORK, THE HARDENED CONCRETE SHALL BE REMOVED AND DISPOSED OF. MATERIALS USED TO CONSTRUCT THE WASHOUT FACILITIES SHALL BE REMOVED FROM THE SITE OF THE WORK AND DISPOSED OF.

TCW

TEMP. CONCRETE WASHOUT FACILITY

WEBER ENGINEERING SERVICES
Where Strong Relationships & Superior Service Guide Your Project

2555 Hartville Rd., Suite B
Rootstown, OH 44272
www.WeberEngineeringServices.com
330-329-2037
matt@webercivil.com

STATE OF OHIO
MATTHEW L. WEBER
61709
REGISTERED
PROFESSIONAL ENGINEER

Reg. No.: 61709

CLIENT:

GEIS CONSTRUCTION

10020 AURORA-HUDSON RD.
STREETSBORO, OHIO
JEN DOTSON
PHONE: (216) 218-3507

OWNER:

GEIS CONSTRUCTION

10020 AURORA-HUDSON RD.
STREETSBORO, OHIO
JEN DOTSON
PHONE: (216) 218-3507

PROPOSED PHOENIX AVE. S.E.
2018 IMPROVEMENTS
MASSILLON, OHIO

Issue Date
08-31-2018
09-07-2018
09-17-2018
(BID SET)
09-24-2018
1 10-29-2018
2 01-18-2019
3 01-23-2019
4 02-20-2010
5 05-10-2019

SWP3 DETAILS

C110D

Project No. 2018-196RW

19 SD 02

C:\Related - WORK\Civil 3D Projects 2018\WSS\2018-196 Rock & Roll\Dwg\2018-196 Sixad\N.dwg 5/10/2019 4:20:16 PM

SPECIFICATIONS FOR DUST CONTROL

ADHESIVES FOR DUST CONTROL			
ADHESIVE	WATER DILUTION (ADHESIVE WATER)	NOZZLE TYPE	APPLICATION RATE GAL./AC.
LATEX EMULSION	12.5:1	FINE	235
TESIN IN WATER ACRYLIC EMULSION (NO-TRAFFIC)	4:1	FINE	300
ACRYLIC EMULSION (NO-TRAFFIC)	7:1	COARSE	450
ACRYLIC EMULSION (TRAFFIC)	3.5:1	COARSE	350

1. VEGETATIVE COVER AND/MULCH- APPLY TEMPORARY OR PERMANENT SEEDING AND MULCH TO AREAS THAT WILL REMAIN IDLE FOR OVER 21 DAYS. SAVING EXISTING TREES AND LARGE SHRUBS WILL ALSO REDUCE SOIL AND AIR MOVEMENT ACROSS DISTURBED AREAS. SEE TEMPORARY SEEDING; PERMANENT SEEDING; MULCHING PRACTICES; AND TREE AND NATURAL AREA PROTECTION PRACTICES.

2. WATERING- SPRAY SITE WITH WATER UNTIL THE SURFACE IS WET BEFORE AND DURING GRADING AND REPEAT AS NEED, ESPECIALLY ON HAUL ROADS AND OTHER HEAVY TRAFFIC ROUTES. WATERING SHALL BE DONE AT A RATE THAT PREVENTS DUST BUT DOES NOT CAUSE SOIL EROSION. WETTING AGENTS SHALL BE UTILIZED ACCORDING TO MANUFACTURERS INSTRUCTIONS.

3. SPRAY-ON ADHESIVES-APPLY ADHESIVE ACCORDING TO THE FOLLOWING TABLE OR MANUFACTURERS' INSTRUCTIONS
4. STONE - GRADED ROADWAYS AND OTHER SUITABLE AREAS WILL BE STABILIZED USING CRUSHED STONE OR COARSE GRAVEL AS SOON AS PRACTICABLE AFTER REACHING AN INTERIM OR FINAL GRADE. CRUSHED STONE OR COARSE GRAVEL CAN BE USED AS A PERMANENT COVER TO PROVIDE CONTROL OF SOIL EMISSIONS.
5. BARRIERS- EXISTING WINDBREAK VEGETATION SHALL BE MARKED AND PRESERVED. SNOW FENCING OR OTHER SUITABLE BARRIER MAY BE PLACED PERPENDICULAR TO PREVAILING AIR CURRENTS AT INTERVALS OF ABOUT 15 TIMES THE BARRIER HEIGHT TO CONTROL AIR CURRENTS AND BLOWING SOIL
6. CALCIUM CHLORIDE - THIS CHEMICAL MAY BE APPLIED BY MECHANICAL SPREADER AS LOOSE, DRY GRANULES OR FLAKES AT A RATE THAT KEEPS THE SURFACE MOIST BUT NOT SO HIGH AS TO CAUSE WATER POLLUTION OR PLANT DAMAGE. APPLICATION RATES SHOULD BE STRICTLY IN ACCORDANCE WITH SUPPLIERS' SPECIFIED RATES.
7. OPERATION AND MAINTENANCE - WHEN TEMPORARY DUST CONTROL MEASURES ARE USED; REPETITIVE TREATMENT SHOULD BE APPLIED AS NEEDED TO ACCOMPLISH CONTROLS.

STREET CLEANING- PAVED ARES THAT HAVE ACCUMULATED SEDIMENT FROM CONSTRUCTION SHOULD BE CLEANED DAILY, OR AS NEED, UTILIZING A STREET SWEEPER OR BUCKET-TYPE ENDLOADER OR SCRAPER.

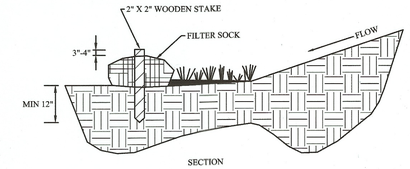

1. MATERIALS-COMPOST USED FOR FILTER SOCKS SHALL BE WEED, PATHOGEN AND INSECT FREE AND FREE OF ANY REFUSE, CONTAMINANTS OR OTHER MATERIALS TOXIC TO PLANT GROWTH. THEY SHALL BE DERIVED FROM A WELL-DECOMPOSED SOURCE OF ORGANIC MATTER AND CONSIST OF PARTICLES RANGING FROM 3/8" TO 2"

2. FILTER SOCKS SHALL BE 3 OR 5 MIL CONTINUOUS, TUBULAR, HDPE 3/4" KNITTED MESH NETTING MATERIAL, FILLED WITH COMPOST PASSING THE ABOVE SPECIFICATIONS FOR COMPOST PRODUCTS.

INSTALLATION:

3. FILTER SOCKS WILL BE PLACED ON A LEVEL LINE ACROSS SLOPES, GENERALLY PARALLEL TO THE BASE OF THE SLOPE OR OTHER AFFECTED AREA. ON SLOPES APPROACHING 2:1, ADDITIONAL SOCKS SHALL BE PROVIDED AT THE TOP AND AS NEEDED MID-SLOPE.

4. FILTER SOCKS INTENDED TO BE LEFT AS A PERMANENT FILTER OR PART OF THE NATURAL LANDSCAPE SHALL BE SEEDED AT THE TIME OF INSTALLATION FOR ESTABLISHMENT OF PERMANENT VEGETATION.

5. FILTER SOCKS ARE NOT TO BE USED IN CONCENTRATE FLOW SITUATIONS OR IN RUNOFF CHANNELS.

MAINTENANCE:

6. ROUTINELY INSPECT FILER SOCKS AFTER EACH SIGNIFICANT RAIN. MAINTAINING FILTER SOCKS IN A FUNCTIONAL CONDITION AT ALL TIMES.

7. REMOVE SEDIMENTS COLLECTED AT THE BASE OF THE FILTER SOCKS IN A FUNCTIONAL CONDITION AT ALL TIMES.

8. WHERE THE FILTER SOCK DETERIORATES OR FAILS, IT WILL BE REPAIRED OR REPLACED WITH A MORE EFFECTIVE ALTERNATIVE.

9. REMOVAL-FILTER SOCKS WILL BE DISPERSED ON SITE WHEN NO LONGER REQUIRED IN SUCH A WAY AS TO FACILITATE AN NO OBSTRUCT SEEDINGS.

CFS COMPOST FILTER SOCK DETAIL

REFERENCE ONLY NOT TO SCALE

SPECIFICATIONS FOR MULCHING

1. MULCH AND OTHER APPROPRIATE VEGETATIVE PRACTICES SHALL BE APPLIED TO DISTURBED AREAS WITHIN 7 DAYS OF GRADING IF THE AREA IS TO REMAIN DORMANT (UNDISTURBED) FOR MORE THAN 21 DAYS OR ON AREAS AND PORTIONS OF THE SITE WHICH CAN BE BROUGHT TO FINAL GRADE.

2. MULCH SHALL CONSIST OF ONE OF THE FOLLOWING:
   - STRAW - SHALL BE UNROTTED SMALL GRAIN STRAW APPLIED AT THE RATE OF 2 TONS/AC. OR 90 LB./1,000 SQ. FT. (TWO TO THREE BALES). THE STRAW MULCH SHALL BE SPREAD UNIFORMLY BY HAND OR MECHANICALLY SO THE SOIL SURFACE IS COVERED. FOR UNIFORM DISTRIBUTION OF HAND-SPREAD MULCH, DIVIDE AREA INTO APPROXIMATELY 1,000-SQ.-FT. SECTIONS AND PLACE TWO 45-LB. BALES OF STRAW IN EACH SECTION.
   - HYDROSEEDERS - WOOD CELLULOSE FIBER SHOULD BE USED AT 2,000 LB./AC. OR 46 LB./1,000 SQ. FT.
   - OTHER - ACCEPTABLE MULCHES INCLUDE MULCH MATTINGS AND ROLLED EROSION CONTROL PRODUCTS APPLIED ACCORDING TO MANUFACTURER'S RECOMMENDATIONS OR WOOD MULCH/CHIPS APPLIED AT 10-20 TONS/AC.

3. MULCH ANCHORING - MULCH SHALL BE ANCHORED IMMEDIATELY TO MINIMIZE LOSS BY WIND OR RUNOFF. THE FOLLOWING ARE ACCEPTABLE METHODS FOR ANCHORING MULCH:
   - MECHANICAL - USE A DISK, CRIMPER, OR SIMILAR TYPE TOOL SET STRAIGHT TO PUNCH OR ANCHOR THE MULCH MATERIAL INTO THE SOIL. STRAW MECHANICALLY ANCHORED SHALL NOT BE FINELY CHOPPED BUT BE LEFT GENERALLY LONGER THAN 6 INCHES.
   - MULCH NETTINGS - USE ACCORDING TO THE MANUFACTURER'S RECOMMENDATIONS, FOLLOWING ALL PLACEMENT AND ANCHORING REQUIREMENTS. USE IN AREAS OF WATER CONCENTRATION AND STEEP SLOPES TO HOLD MULCH IN PLACE.
   - SYNTHETIC BINDERS - FOR STRAW MULCH, SYNTHETIC BINDERS SUCH AS ACRYLIC DLR (AGRI-TAC), DCA-70, PETROSET, TERRA TACK, OR EQUAL MAY BE USED AT RATES RECOMMENDED BY THE MANUFACTURER. ALL APPLICATIONS OF SYNTHETIC BINDERS MUST BE CONDUCTED IN SUCH A MANNER WHERE THERE IS NO CONTACT WITH WATER OF THE STATE.
   - WOOD CELLULOSE FIBER - WOOD CELLULOSE FIBER MAY BE USED FOR ANCHORING STRAW. THE FIBER BINDER SHALL BE APPLIED AT A NET DRY WEIGHT OF 750 LBS./AC. THE WOOD CELLULOSE FIBER SHALL BE MIXED WITH WATER AND THE MIXTURE SHALL CONTAIN A MAXIMUM OF 50 LB./100 GAL. OF WOOD CELLULOSE FIBER.

SPECIFICATIONS FOR SODDING

MATERIALS

1. SOD SHALL BE HARVESTED, DELIVERED AND INSTALLED WITHIN A PERIOD OF 48 HOURS. SOD NOT TRANSPLANTED WITHIN THIS PERIOD SHALL BE INSPECTED AND APPROVED PRIOR TO INSTALLATION.

2. THE SOD SHALL BE KEPT MOIST AN COVERED DURING HAULING AND PREPARATION FOR PLACEMENT.

3. SOD SHALL BE MACHINE CUT AT A UNIFORM SOIL THICKNESS OF 0.75 INCHES, PLUS OR MINUS 0.25 INCHES, AT THE TIME OF CUTTING. MEASUREMENTS FOR THICKNESS SHALL EXCLUDE TOP GROWTH AND THATCH.

SITE PREPARATION

1. A SUBSOILER, PLOW OR OTHER IMPLEMENT SHALL BE USED TO REDUCE SOIL COMPACTION AND ALLOW MAXIMUM INFILTRATION. MAXIMIZING INFILTRATION WILL HELP CONTROL BOTH RUNOFF RATE AND WATER QUALITY. SUBSOILING SHALL NOT BE CONDUCTED ON SLIP-PRONE AREAS WHERE SOIL PREPARATION SHOULD BE LIMITED ONLY TO WHAT IS NECESSARY FOR ESTABLISHING VEGETATION.

2. THE AREA SHALL BE GRADED AND TOPSOIL SPREAD WHERE NEEDED.

3. SOIL AMENDMENTS

   LIME- AGRICULTURAL GROUND LIMESTONE SHALL BE APPLIED TO ACIDIC SOILS AS RECOMMENDED BY A SOIL TEST. IN LIEU OF A SOIL TEST, LIME SHALL BE APPLIED AT THE RATE OF 100 LB./1,000 SQ. FT OR 2 TONS/AC.

   FERTILIZER- FERTILIZER SHALL BE APPLIED AS RECOMMENDED BY A SOIL TEST. IN LIEU OF A 2 SOIL TEST FERTILIZER SHALL BE APPLIED AT A RATE OF 12 LB./1,000 SQ. FT OR 500 LB./AC. OF 10-10-10 OR 12-12-12 ANALYSIS

   THE LIME AND FERTILIZER SHALL BE WORKED INTO THE SOIL WITH A DISK HARROW, SPRING-TOOTH HARROW, OR OTHER SUITABLE FIELD IMPLEMENT TO A DEPTH OF 3 INCHES.

4. BEFORE LAYING SOD, THE SURFACE SHALL BE UNIFORMLY GRADED AND CLEARED OF ALL DEBRIS, STONES AND CLODS LARGER THAN 3-IN. DIAMETER.

SOD INSTALLATION

1. DURING PERIODS OF EXCESSIVELY HIGH TEMPERATURES, THE SOIL SHALL BE LIGHTLY IRRIGATED IMMEDIATELY BEFORE LAYING THE SOD.

2. SOD SHALL NOT BE PLACED ON FROZEN SOIL.

3. THE FIRST ROW OF SOD SHALL BE LAID IN A STRAIGHT LINE WITH SUBSEQUENT ROWS PLACED PARALLEL TO AND TIGHTLY WEDGED AGAINST EACH OTHER. LATERAL JOINTS SHALL BE STAGGERED IN A BRICK-LIKE PATTERN. ENSURE THAT SOD IS NOT STRETCHED OR OVERLAPPED AND THAT ALL JOINTS ARE BUTTED TIGHT IN ORDER TO PREVENT VOIDS THAT WOULD DRY THE ROOTS.

4. ON SLOPING AREAS WHERE EROSION MAY BE A PROBLEM, SOD SHALL BE LAID WITH THE LONG EDGE PARALLEL TO THE CONTOUR AND STAGGERED JOINTS. THE SOD SHALL BE SECURED WITH PEGS OR STAPLES.

5. AS SODDING IS COMPLETED IN ANY ONE SECTION, THE ENTIRE AREA SHALL BE ROLLED OR TAMPED TO ENSURE SOLID CONTACT OF ROOTS WITH THE SOIL SURFACE. SOD SHALL BE WATERED IMMEDIATELY AFTER ROLLING OR TAMPING UNTIL THE SOD AND SOIL SURFACE BELOW THE SOD ARE THOROUGHLY WET. THE OPERATIONS OF LAYING TAMPING AND IRRIGATING FOR ANY PIECE OF SOD SHALL BE COMPLETED WITHIN 8 HOURS.

MAINTENANCE

1. IN THE ABSENCE OF ADEQUATE RAINFALL, WATERING SHALL BE PERFORMED DAILY OR AS OFTEN AS NECESSARY DURING THE FIRST WEEK WITH SUFFICIENT QUANTITIES TO MAINTAIN MOIST SOIL TO A DEPTH OF 4-6 INCHES.

2. AFTER THE FIRST WEEK, SOD SHALL BE WATERED AS NECESSARY TO MAINTAIN ADEQUATE MOISTURE AND ENSURE ESTABLISHMENT.

3. THE FIRST MOWING SHALL NOT BE ATTEMPTED UNTIL SOD IS FIRMLY ROOTED.

WEBER ENGINEERING SERVICES
Where Strong Relationships & Superior Service Guide Your Project
2555 Hartville Rd., Suite B
Rootstown, OH 44272
www.WeberEngineeringServices.com
330-329-2037
matt@webercivil.com

STATE OF OHIO
MATTHEW L. WEBER
61709
REGISTERED
PROFESSIONAL ENGINEER

Reg. No.: 61709

CLIENT:

GEIS CONSTRUCTION

10020 AURORA-HUDSON RD.
STREETSBORO, OHIO
JEN DOTSON
PHONE: (216) 218-3507

OWNER:

GEIS CONSTRUCTION

10020 AURORA-HUDSON RD.
STREETSBORO, OHIO
JEN DOTSON
PHONE: (216) 218-3507

PROPOSED PHOENIX AVE. S.E.
2018 IMPROVEMENTS
MASSILLON, OHIO

Issue Date
08-31-2018
09-07-2018
09-17-2018 (BID SET)
09-24-2018
△1 10-29-2018
△2 01-18-2019
△3 01-23-2019
△4 02-20-2010
△5 05-10-2019

SWP3 DETAILS

C110E

Project No. 2018-196RW

19 SD 02

C:\Cleveland - WORKS\Civil 3D Projects\2018\WEES\2018-196 Buck & Ruff\Dwg\2018-196 SitePlIN.dwg 5/10/2019 4:20:18 PM