CITY OF MASSILLON

CITY ENGINEER DEPARTMENT

STARK COUNTY, OHIO

9th ST. SW IMPROVEMENT PROJECT

PROJECT DESCRIPTION

FULL DEPTH PAVEMENT REPLACEMENT WITH CURB AND INSTALLATION OF DRAINAGE SYSTEM.

CONVENTIONAL SIGNS

RIGHT OF WAY • • • EXISTING: , PROPOSED:
COUNTY LINE • • • •
TOWNSHIP LINE • • •
CORPORATION LINE • •
FENCE LINE • • • • EXISTING: , PROPOSED:
GUARDRAIL • • • • EXISTING: , PROPOSED:
MANHOLES • • • • • EXISTING: , PROPOSED: , REHABILITATED:
CATCH BASINS • • EXISTING: , PROPOSED: , REHABILITATED:
SIGNS • • • • • • 1-POST: , 2-POST: , 3-POST: , STREET:
EXISTING POLES • • • POWER: , TELEPHONE , LIGHT , SPAN
PROPOSED POLES • • POWER: , TELEPHONE , LIGHT , SPAN
EXIST. UTILITIES • • • VALVE: , HYDRANT: , METERS: , GUY:

PERMIT TO INSTALL

SANITARY SEWER PERMIT TO INSTALL (P.T.I.) HAS BEEN RECEIVED FROM THE OHIO ENVIROMENTAL PROTECTION AGENCY PROTECTION AGENCY THIS_____DAY OF,_____, 20___.
PTI No. _____

UNDERGROUND UTILITIES

TWO WORKING DAYS
BEFORE YOU DIG
CALL 1-800-362-2764 (TOLL FREE)
OHIO UTILITIES PROTECTION SERVICE
NON-MEMBERS
MUST BE CALLED DIRECTLY

TWO WORKING DAYS
BEFORE YOU DIG
1-800-925-0988 (TOLL FREE)
OIL @ GAS PRODUCERS UNDERGROUND PROTECTION SERVICE

PLAN PREPARED BY:
CITY OF MASSILLON
Engineering Department

OWNER:
CITY OF MASSILLON
151 Lincoln Way East
Massillon, Ohio 44646

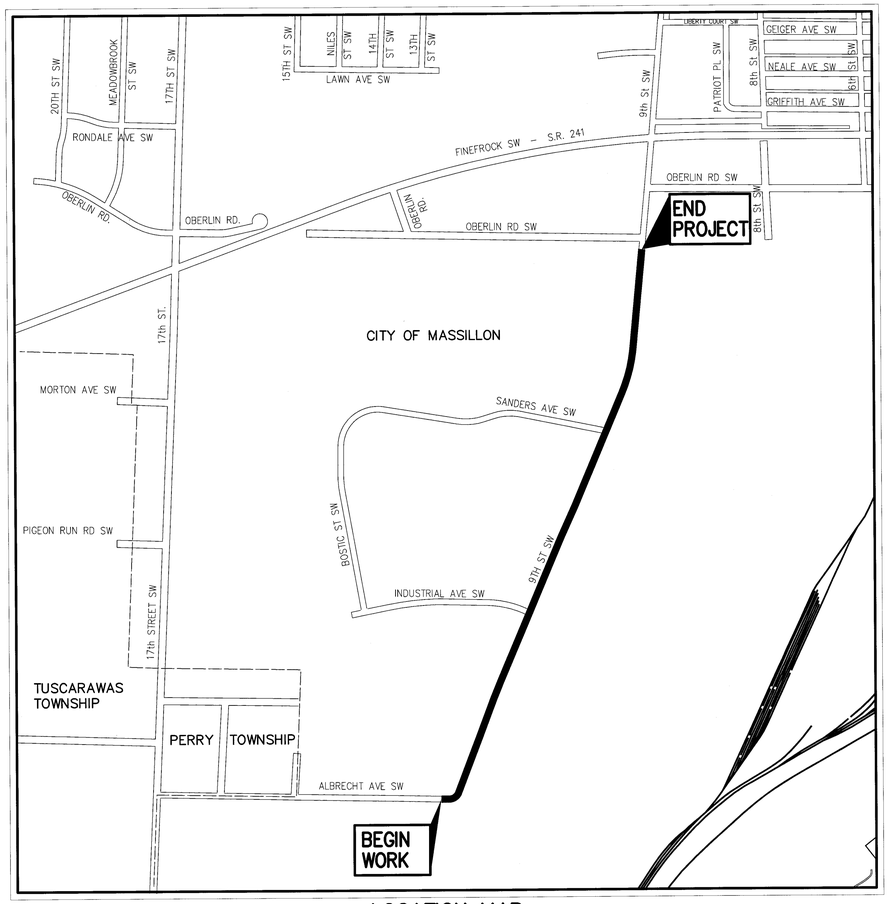

LOCATION MAP

PORTION TO BE IMPROVED • • • • • • • • • • • • •
STREETS •

Kathy Catazaro-Perry, Mayor
Massillon
City of Champions

INDEX OF SHEETS:

TITLE SHEET • • • • • • • • • • • • • 1
SCHEMATIC PLAN • • • • • • • • • • • 2
TYPICAL SECTIONS• • • • • • • • • • • 3
GENERAL NOTES • • • • • • • • • • • 4–5
GENERAL SUMMARY • • • • • • • • • • 5A
PAVEMENT CALCS • • • • • • • • • • • 6
PLAN AND PROFILE • • • • • • • • • • 7–16
CROSS-SECTIONS • • • • • • • • • • 17–34
INTERSECTION DETAIL • • • • • • • • • 35
MISCELLANEOUS DETAILS • • • • • • • • 36
DRAINAGE PLAN AND PROFILES • • • • 37–38
DRAINAGE DETAILS • • • • • • • • • • 39–43

CITY ENGINEER — KEITH A. DYLEWSKI, P.E., P.S. — 6/9/14 DATE

STATE OF OHIO
KEITH A. DYLEWSKI
E-70907
REGISTERED PROFESSIONAL ENGINEER

CITY OF MASSILLON ELECTED OFFICIALS

KATHY CATAZARO-PERRY • • • • • • • • • • • • • • • • • • MAYOR
PERICLES G. STERGIOS • • • • • • • • LAW DIRECTOR/PROSECUTOR
JAYNE FERRERO • AUDITOR
MAUDE SLAGLE • • • • • • • • • • • • • • • • • • • TREASURER

COUNCIL
TONY M. TOWNSEND • • • • • • • • • • • • • • • • • • PRESIDENT
SARITA CUNNINGHAM-HEDDERLY • • • • • • • • • • • • 1st WARD
NANCY HALTER• 2nd WARD
ANDREA SCASSA • • • • • • • • • • • • • • • • • • • 3rd WARD
SHADDRICK STINSON • • • • • • • • • • • • • • • • • 4th WARD
MEGAN STARRETT• • • • • • • • • • • • • • • • • • • 5th WARD
ED LEWIS • 6th WARD
PAUL MANSON• AT LARGE
MICHELLE DEL RIO-KELLER • • • • • • • • • • • • • • AT LARGE
MILAN CHOVAN• AT LARGE

NW NE SW SE
VERTICAL IN FEET 500 250 0
0 250 500
HORIZONTAL SCALE IN FEET

CHECKED BY: KAD
DATE: MAY, 2013
DRAWN BY: FPW
DATE: MAY, 2013

REVISIONS: DATE | DESCRIPTION

9th ST. SW IMPROVEMENT PROJECT
Title Sheet
City of Massillon
Stark County, Ohio

Kathy Catazaro-Perry, Mayor
Massillon
City of Champions

DRAWING NAME: SHT1-9thTitl.dwg
CITY NUMBER: 09ST01

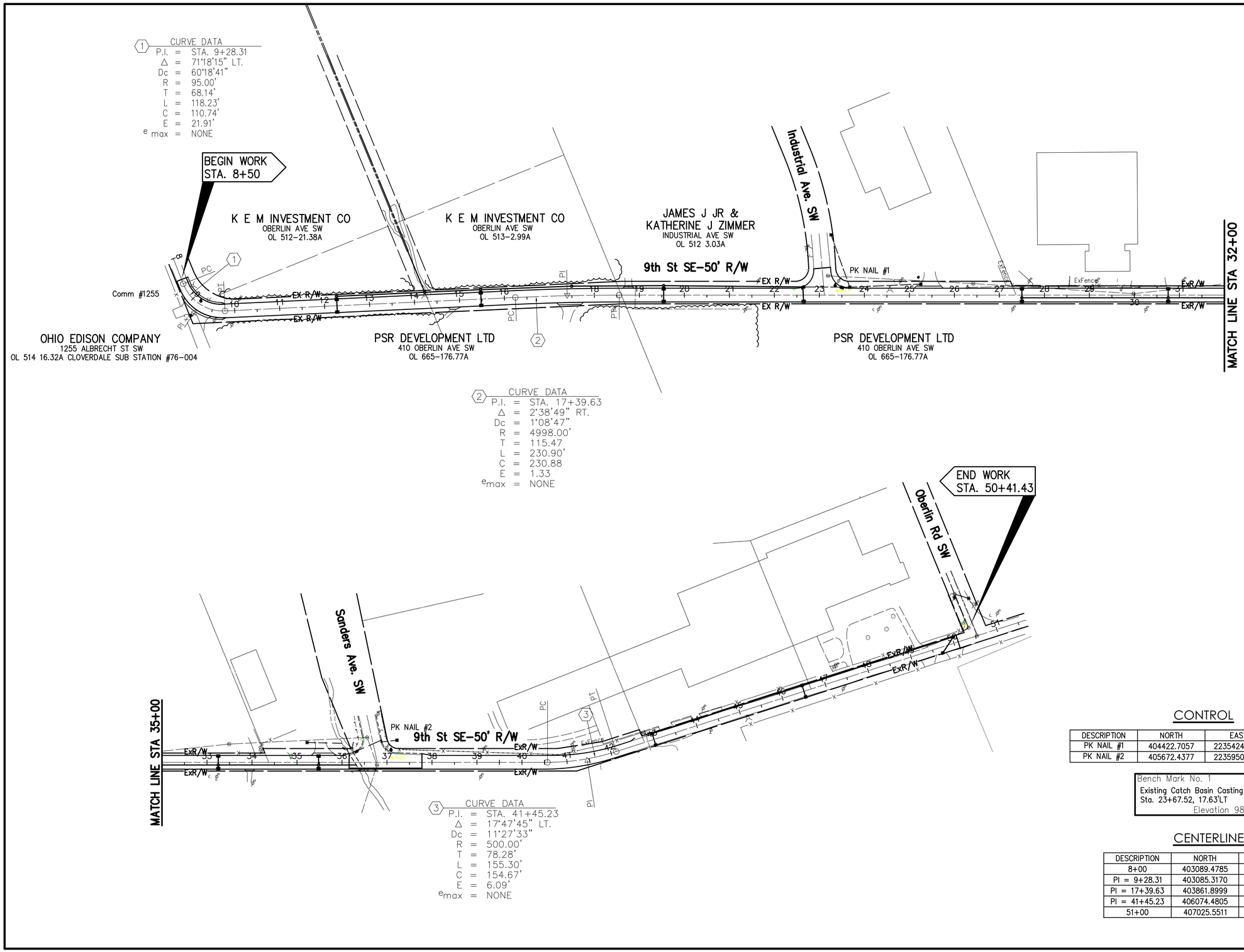

CONTROL

DESCRIPTION	NORTH	EAST	ELEVATION
PK NAIL #1	404422.7057	2235424.0899	
PK NAIL #2	405672.4377	2235950.6539	

Bench Mark No. 1
Existing Catch Basin Casting
Sta. 23+67.52, 17.63'LT
Elevation 980.95

CENTERLINE

DESCRIPTION	NORTH	EAST
8+00	403089.4785	2234777.1716
PI = 9+28.31	403085.3170	2234905.4161
PI = 17+39.63	403861.8999	2235196.6076
PI = 41+45.23	406074.4805	2236140.6251
51+00	407025.5511	2236231.3205

VERTICAL IN FEET 100 50 0

HORIZONTAL SCALE IN FEET 0 50 100

CHECKED BY: KAD
DATE: MAY, 2012
DRAWN BY: FPW
DATE: MAY, 2012

REVISIONS:

DATE	DESCRIPTION

9th St. SW Improvement Project
9th St. SW Schematic Plan
City of Massillon
Stark County, Ohio

Kathy Catazaro-Perry, Mayor
Massillon
City of Champions

DRAWING NAME: xxxx.DWG
CITY NUMBER: xxxx.DWG

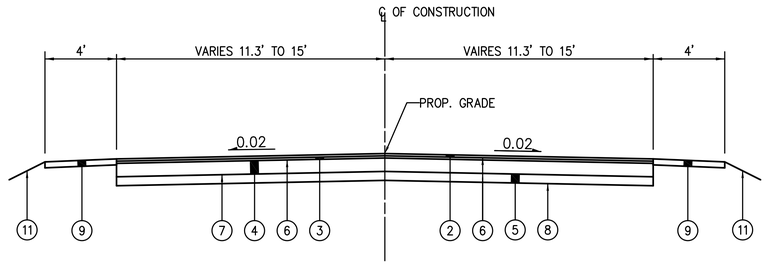

TYPICAL SECTION

9th ST. SW
STA. 8+50 TO STA. 9+80

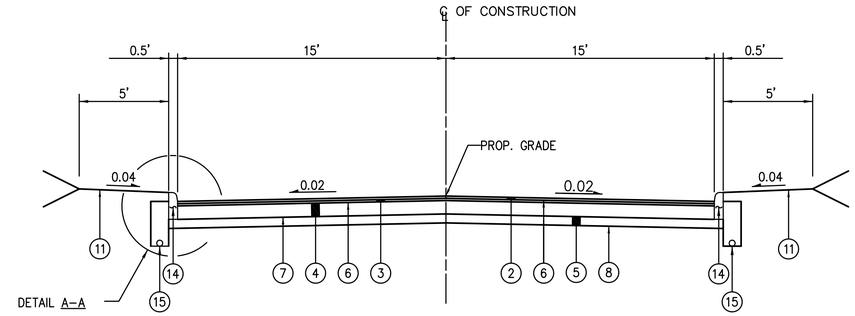

CURBED TYPICAL SECTION

9th ST. SW
STA. 9+80 TO STA. 36+15.95
STA. 37+77.72 TO STA. 42+50

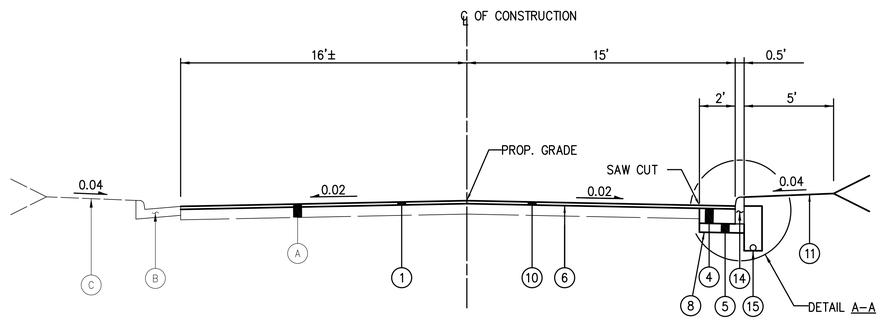

CURBED TYPICAL SECTION

9th ST. SW
STA. 36+15.95 TO STA. 37+77.72

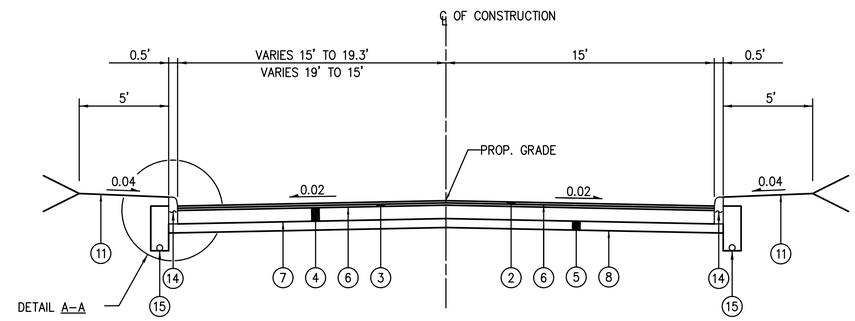

CURBED TYPICAL SECTION

9th ST. SW
STA. 36+00 TO STA. 36+15.95
STA. 37+77.72 TO STA. 38+00

EXISTING LEGEND

- (A) Variable Thickness Asphalt Pavement
- (B) Existing Curb
- (C) Exist Lawn

PROPOSED LEGEND

1. – ITEM 448–2" ASPHALT CONCRETE SURFACE COURSE, TYPE 1, PG 64–22
2. – ITEM 448–1 1/2" ASPHALT CONCRETE SURFACE COURSE, TYPE 1, PG 64–22
3. – ITEM 448–1 1/2" ASPHALT CONCRETE INTERMEDIATE COURSE, TYPE 2, PG 64–28
4. – ITEM 301–9" ASPHALT CONCRETE BASE
5. – ITEM 304–6" AGGREGATE BASE
6. – ITEM 407–TACK COAT
7. – ITEM 408–PRIME COAT
8. – ITEM 204 – SUBGRADE COMPACTION
9. – ITEM 254spec–4" THICK SHOULDER MATERIAL (SHALL CONSIST OF THE PAVEMENT PLANING MATERIAL)
10. – ITEM 254–VARIES PAVEMENT PLANING (2" MAX. TO 0" MIN.)
11. – ITEM 659–SEEDING AND MULCHING
12. – ITEM 209spec–LINEAR GRADING
13. – ITEM 690spec–PAVEMENT REINFORCING FABRIC
14. – ITEM 609–CURB, TYPE 6
15. – ITEM 605–4" SHALLOW PIPE UNDERDRAINS

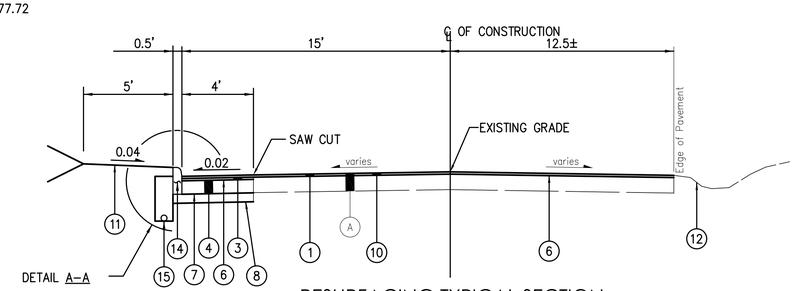

RESURFACING TYPICAL SECTION

STA. 42+50 TO STA. 50+15

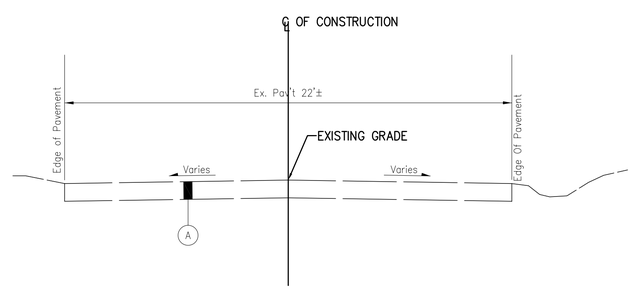

EXISTING TYPICAL SECTION

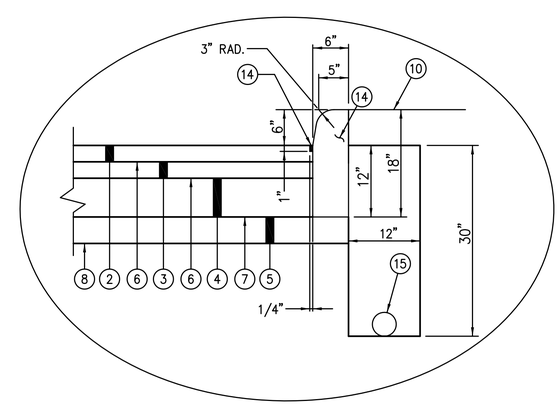

DETAIL A-A

NW NE SW SE N

VERTICAL IN FEET 4 2 0

0 2 4
HORIZONTAL SCALE IN FEET

CHECKED BY: KAD
DATE: MAY, 2014
DRAWN BY: FPW
DATE: MAY, 2014

REVISIONS:

DATE	DESCRIPTION

9th St. SW Improvement Project
Typical Sections
City of Massillon
Stark County, Ohio

Kathy Catazaro-Perry, Mayor
Massillon
City of Champions

DRAWING NAME: SHT3–9thTyyp.DWG
CITY NUMBER: 10ST03

* THE FOLLOWING NOTES ARE CITY OF MASSILLON STANDARD NOTES AND MAY NOT BE APPLICABLE TO ALL PROJECTS.

UTILITIES

LISTED BELOW ARE ALL KNOWN UTILITIES LOCATED WITHIN THE PROJECT CONSTRUCTION LIMITS TOGETHER WITH THEIR RESPECTIVE OWNERS:

AT&T
50 W.BOWERY, 6TH FLOOR
AKRON, OH 44308
800-384-8057

AQUA WATER
P.O. BOX 584
MASSILLON, OH 44648
(330) 833-4156

OHIO EDISON
STARK DIVISION
2600 S. ERIE ST.
MASSILLON, OH 44545
(330) 830-7085

MASSILLON CABLE TV
P.O. BOX 814
MASSILLON, OH 44648
(330) 833-4134

GREAT LAKES
104 6TH ST. S.W.
CANTON, OH 44702
(330) 456-2454

CITY OF MASSILLON
SANITARY SEWER
151 LINCOLN WAY EAST
MASSILLON, OH 44646
(330) 830-1722

AT&T COMMUNICATIONS
2535 E. 40TH AVE.
DENVER, CO 80205-3601
(800) 852-3786

DOMINION EAST OHIO GAS COMPANY
4725 SOUTHWAY ST. S.W.
CANTON, OH 44706
(330) 478-3142

NORTHEAST OHIO NATURAL
GAS CORP.
9081 S.R. 250
STRASBURG, OH 44680-9766
(330) 878-5589

THE CONTRACTOR SHALL NOTIFY ALL UTILITIES 48 HOURS PRIOR TO WORK.

THE LOCATION OF THE UNDERGROUND UTILITIES SHOWN ON THE PLANS ARE SHOWN AT APPROXIMATE LOCATIONS AND WHERE OBTAINED AS REQUIRED FROM THE OWNERS AS REQUIRED BY SECTION 153.64 OF THE OHIO REVISED CODE

OUPS – 1-800-362-2764
OGUPUPS – 1-800-925-0988

DATUM ELEVATION

ALL BENCHMARKS ARE BASED ON REFERENCE BENCHMARKS PROVIDED BY THE CITY OF MASSILLON

STATIONING

ALL STATIONING SHOWN IS REFERENCED TO THE BASELINE AS SHOWN.

NOTIFICATION OF SAFETY FORCES AND BUS GARAGES

THE CONTRACTOR SHALL NOTIFY ALL AGENCY LISTED BELOW AT LEAST 48 HOURS IN ADVANCE OF ANY STREET CLOSING OR TRAFFIC CHANGE.

MASSILLON SAFETY SERVICE
330-830-1702

MASSILLON FIRE DEPARTMENT
330-833-1053

PERRY TOWNSHIP HALL
330-833-2141

NORTH LAWRANCE FIRE DEPT.
330-832-6347

TUSCARAWAS TOWNSHIP HALL
330-832-4337

JACKSON FIRE DEPARTMENT
330-832-1553

MASSILLON POLICE DEPARTMENT
330-830-1735

MASSILLON SCHOOL BUS GARAGE
330-830-1849

JACKSON TOWNSHIP HALL
330-832-7416

PERRY FIRE DEPARTMENT
330-478-5121

JACKSON POLICE DEPARTMENT
330-497-7440

JACKSON SCHOOL BUS GARAGE
330-830-8042

PERRY POLICE DEPARTMENT
330-833-3865

PERRY SCHOOL BUS GARAGE
330-477-1300

STARK COUNTY SHERIFF
330-430-3887

TUSCARAWAS SCHOOL BUS GARAGE
330-837-7805

SARTA
330-454-5333

SUBSURFACE CONDITIONS

IT IS THE OBLIGATION AND RESPONSIBILITY OF THE CONTRACTOR TO MAKE HIS OWN INVESTIGATION OF SUBSURFACE CONDITIONS PRIOR TO SUBMITTING THEIR BID. PROSPECTIVE BIDDERS ARE TO COORDINATE WITH THE OWNER FOR ACCESS TO THE SITE FOR INSPECTIONS AND EXPLORATORY EXCAVATION. THE BIDDER SHALL CONTACT THE OWNER AT LEAST 72 HOURS IN ADVANCE OF THE DESIRED INSPECTION OR EXCAVATION. THE BIDDER SHALL CONTACT O.U.P.S. AND OBTAIN LOCATIONS OF OTHER UTILITIES.

QUANTITIES

QUANTITIES ARE INDICATED FOR COMPARISON OF BIDS ONLY. IT SHALL BE THE RESPONSIBILITY OF THE CONTRACTOR TO VERIFY QUANTITIES BEFORE ORDERING MATERIALS. VARIATIONS FROM THE PLAN QUANTITIES SHALL BE APPROVED BY THE CITY OF MASSILLON ENGINEER BEFORE MATERIAL ORDERS ARE PLACED. MATERIALS REJECTED DUE TO INCOMPATIBILITY BETWEEN ORDERED QUANTITIES AND FIELD CONDITIONS SHALL BE REPLACED AT THE CONTRACTOR'S EXPENSE.

CONSTRUCTION SPECIFICATIONS & STANDARDS

ALL CONSTRUCTION IS TO BE COMPLETED ACCORDING TO THE CURRENT CITY OF MASSILLON SPECIFICATIONS AND STANDARDS, AND THE LATEST EDITION OF THE STATE OF OHIO DEPARTMENT OF TRANSPORTATION CONSTRUCTION AND MATERIAL SPECIFICATIONS. WHEN A CONFLICT ARISES BETWEEN THE CITY OF MASSILLON AND ODOT'S STANDARDS, THE MORE STRINGENT STANDARD WILL BE USED AT THE DISCRETION OF THE CITY OF MASSILLON ENGINEER. THE CONTRACTOR SHALL FOLLOW ALL OSHA AND ADA REGULATIONS AND REQUIREMENTS.

PRESERVATION OF EXISTING UTILITY SERVICES

ANY EXISTING WATER LINE, SANITARY SEWER, STORM SEWER, GAS LINE OR OTHE UTILITY IN OR OUTSIDE OF THE CONSTRUCTION LIMITS, DAMAGED DURING CONSTRUCTION OF THE PROPOSED PROJECT SHALL BE REPLACED AT THE CONTRACTORS EXPENSE.

CONTRACTOR AVAILABILITY

THE CONTRACTOR SHALL SUPPLY THE ENGINEER WITH A 24 HOUR PHONE NUMBER WHERE THE CONTRACTOR SHALL BE AVAILABLE FOR EMERGENCIES.

PRESERVATION OF PRIVATE PROPERTY

THE CONTRACTOR SHALL PERFORM WORK AS TO NOT DISTURB, DAMAGE OR DESTROY ANY TELEPHONE OR POWER POLES, SIGNS, LANDSCAPING ITEMS, ETC.. ANY ITEM DAMAGED OR DESTROYED SHALL BE REPLACED AT THE CONTRACTOR'S EXPENSE AND ANY ITEM DISTURBED OR IN CONFLICT WITH THE WORK TO BE PERFORMED SHALL BE REMOVED AND RESET AT THE CONTRACTOR'S EXPENSE. PRIOR ENGINEER APPROVAL IS REQUIRED BEFORE ANY OF THE ABOVE ITEMS ARE PERFORMED.

ACCESSIBILITY TO PRIVATE PROPERTY

ACCESS TO ALL DRIVEWAYS AND PARKING AREAS WITHIN THE PROJECT LIMITS SHALL BE MAINTAINED AT ALL TIMES. THE TRENCH SHALL BE BACKFILLED AT THE END OF EACH WORK DAY TO PROVIDE ACCESS. THE CONTRACTOR MUST NOTIFY EACH PROPERTY OWNER AT LEAST 24 HOURS IN ADVANCE OF CUTTING THEIR DRIVEWAY.

WORK LIMITS

THE WORK LIMITS SHOWN ON THESE PLANS ARE FOR PHYSICAL CONSTRUCTION ONLY. THE CONTRACTOR SHALL PROVIDE FOR THE INSTALLATION AND OPERATION OF ALL WORK ZONE TRAFFIC CONTROL AND WORK ZONE TRAFFIC CONTROL DEVICES REQUIRED BY THESE PLANS WHETHER INSIDE OR OUTSIDE THESE WORK LIMITS.

PROFILE AND ALIGNMENT

THE PROPSED PAVEMENT RESURFACING SHALL FOLLOW THE ALIGNMENT AND PROFILE OF THE EXISTING PAVEMENT. THE PROPOSED ASPHALT CONCRETE OVERLAY SHALL BE AS SHOWN ON THE TYPICAL SECTIONS.

GRADING AND FILLING OPERATIONS

THE PLACEMENT OF COMPACTED AGGREGATE SHALL NOT EXTEND PAST THE EXISTING GRADED SHOULDERS. NO EXCAVATION, GRADING, OR FILLING OPERATIONS SHALL BE PERFORMED IN ANY WETLANDS OR STREAMS, UNLESS THE REQUIRED STATE AND/OR FEDERAL PERMITS HAVE BEEN OBTAINED IN ACCORDANCE WITH ALL APPLICABLE STATE AND/OR FEDERAL LAWS AND REGULATIONS. UNDER NO CIRCUMSTANCES SHALL THE CONTRACTOR STORE EQUIPMENT AND/OR MATERIALS IN ANY WETLANDS OR STREAMS.

CLEARING AND GRUBBING

ALTHOUGH THERE ARE NO TREES OR STUMPS SPECIFICALLY MARKED FOR REMOVAL WITHIN THE LIMITS OF THE PROJECT. A LUMP SUM QUANTITY HAS BEEN INCLUDED IN THE BID FORM FOR ITEM201SPEC, CLEARING AND GRUBBING. THIS ITEM SHALL INCLUDE ALL PROVISIONS AS SET FORTH IN THE 2008 ODOT SPECIFICATIONS. REMOVAL ITEMS MAY INCLUDE TREES, STUMPS, AND BRUSH AS DETERMINED BY THE CITY ENGINEER.

ALL PROVISIONS AS SET FORTH IN THE SPECIFICATIONS UNDER THIS ITEM SHALL BE INCLUDED IN THE LUMP SUM PRICE BID FOR ITEM 201SPEC, CLEARING AND GRUBBING.

PRESERVATION OF PROPERTY CORNERS AND SURVEY MARKERS

THE CONTRACTOR SHALL PRESERVE ALL CORNERSTONES, IRON PINS, CONCRETE MONUMENTS AND ANY TYPE OF LAND MONUMENT. HE SHALL HAVE ALL LAND MONUMENTS IN THE PROXIMITY OF THE WORK REFERENCED. HE SHALL REPLACE DESTROYED OR DAMAGED MONUMENTS AND SHAL FURNISH A CERTIFICATION BY AN OHIO REGISTERED SURVEYOR THAT THE MONUMENTS HAVE BEEN RESTORED.

REMOVAL AND RELOCATION OF EXISTING UTILITIES

THE CONTRACTOR IS REQUIRED TO COOPERATE WITH EACH RESPECTIVE UTILITY OWNER FOR THE REMOVAL AND RELOCATION OF ANY AND ALL UTILITIES THAT CREATE A CONFLICT WITH CONSTRUCTION OF THE PROJECT.

CROSSING OR CONNECTING TO EXISTING PIPES AND UTILITIES

WHERE THE PLANS PROVIDE FOR A PROPOSED CONDUIT TO BE CONNECTED TO, OR CROSS OVER OR UNDER AN EXISTING SEWER OR UNDERGROUND UTILITY, THE CONTRACTOR SHALL LOCATE THE EXISTING PIPES OR UTILITIES BOTH AS TO LINE AND GRADE BEFORE STARTING TO LAY THE PROPOSED CONDUIT.

IF IT IS DETERMINED THAT THE ELEVATION OF THE EXISTING CONDUIT, OR EXISTING APPURTENANCE TO BE CONNECTED, DIFFERS FROM THE PLAN ELEVATION OR RESULTS IN A CHANGE IN THE PLAN CONDUIT SLOPE, THE CITY OF MASSILLON ENGINEER SHALL BE NOTIFIED BEFORE STARTING CONSTRUCTION OF ANY PORTION OF THE PROPOSED CONDUIT WHICH WILL BE AFFECTED BY THE VARIANCE IN THE EXISTING ELEVATIONS.

PAYMENT FOR THE OPERATIONS DESCRIBED ABOVE SHALL BE INCLUDED IN THE CONTRACT PRICE FOR THE PERTINENT 603 CONDUIT ITEM.

REVIEW OF SANITARY AND DRAINAGE FACILITIES

AN INSPECTION OF ALL EXISTING SEWERS WHICH ARE TO REMAIN IN SERVICE AND WHICH MAY BE AFFECTED BY THE WORK SHALL BE COMPLETED BEFORE AND AFTER WORK HAS COMMENCED. FINAL ACCEPTANCE BY THE CITY OF MASSILLON WILL NOT OCCUR UNTIL AFTER SAID INSPECTION. THE CONDITION OF THE EXISTING CONDUITS AND THEIR APPURTENANCES SHALL BE DETERMINED FROM FIELD OBSERVATIONS. RECORDS OF THE OBSERVATIONS SHALL BE PROVIDED IN WRITING BY THE CONTRACTOR TO THE CITY OF MASSILLON.

ALL NEW CONDUITS, INLETS, CATCH BASINS, AND MANHOLES CONSTRUCTED AS A PART OF THE PROJECT SHALL BE FREE OF ALL FOREIGN MATTER AND IN A CLEAN CONDITION BEFORE THE PROJECT WILL BE ACCEPTED BT THE CITY OF MASSILLON.

ALL EXISTING SEWERS INSPECTED INITIALLY BY THE ABOVE MENTIONED PARTIES SHALL BE MAINTAINED AND LEFT IN A CONDITION REASONABLY COMPARABLE TO THAT DETERMINED BY THE ORIGINAL INSPECTION. ANY CHANGE IN THE CONDITION RESULTING FROM THE CONTRACTOR'S OPERATIONS SHALL BE CORRECTED BY THE CONTRACTOR TO THE SATISFACTION OF THE ENGINEER.

PAYMENT FOR ALL OPERATIONS DESCRIBED ABOVE SHALL BE INCLUDED IN THE CONTRACT PRICE FOR THE PERTINENT 603 CONDUIT ITEMS.

ITEM 407. TACK COAT

THE RATE OF APPLICATION OF THE 407 TACK COAT SHALL BE SUBJECT TO ADJUSTMENT AS DIRECTED BY THE ENGINEER. QUANTITIES INDICATE AN AVERAGE APPLICATION RATE OF 0.08 GALLONS PER SQUARE YARD OF TACK COAT FOR ESTIMATING PURPOSES ONLY.

ITEM 408. BITUMINOUS PRIME COAT

THE RATE OF APPLICATION OF THE 408 PRIME COAT SHALL BE SUBJECT TO ADJUSTMENT AS DIRECTED BY THE ENGINEER. QUANTITIES INDICATE AN AVERAGE APPLICATION RATE OF 0.40 GALLONS PER SQUARE YARD OF PRIME COAT FOR ESTIMATING PURPOSES ONLY.

ITEM 659. TOPSOIL, SEEDING AND MULCHING

ITEM 659 SHALL BE APPLIED TO ALL EXPOSED SOIL AREAS DISTURBED DURING CONSTRUCTION. SUCH AS SPECIFIED IN ITEM 659 AND IS NOT LIMITED TO JUST TOPSOIL, SEEDING AND MULCHING.

THE CITY SHALL APPROVE SEED MIX PRIOR TO APPLICATION TO BE USED THROUGHOUT CONSTRUCTION LIMITS.

ITEM 603SPEC – PIPE CLEANOUT

THIS WORK SHALL CONSIST OF REMOVING SEDIMENT AND DEBRIS FROM THE EXISTING CONDUITS SPECIFIED IN THE FIELD. ALL MATERIAL REMOVED SHALL BE DISPOSED OF AS PER 203.05. ALL SEWERS SHALL BE CLEANED OUT TO THE SATISFACTION OF THE ENGINEER.

CLEANOUT OF THE PIPE SHALL BE PAID FOR AT THE UNIT PRICE BID FOR ITEM SPECIAL – PIPE CLEANOUT. THIS PRICE SHALL INCLUDE THE COST FOR MATERIAL, EQUIPMENT, LABOR, AND ALL INCIDENTALS REQUIRED TO COMPLETE THE CLEANOUT.

THE FOLLOWING ESTIMATE QUANTITIES HAVE BEEN INCLUDED IN THE GENERAL SUMMARY FOR THE ABOVE NOTED WORK:

603SPEC, PIPE CLEANOUT 250 L.F.

CONDITIONS OF WORK

ALL WORK PERFORMED UNDER THIS CONTRACT SHALL COMPLY WITH THE U.S. DEPARTMENT OF LABOR, OCCUPATIONAL SAFETY AND HEALTH ACT, STATE, COUNTY, AND CITY OF MASSILLON LAWS AND REGULATIONS. ALL WORK, AT ALL TIMES SHALL BE SUBJECT TO OBSERVATION BY THE CITY OF MASSILLON ENGINEER AND/OR HIS REPRESENTATIVE. ALL WORK SHALL COMPLY WITH THE CONDITIONS OF THE CONTRACT DOCUMENTS AND OHIO EPA, AND STANDARDS OF THE CITY OF MASSILLON. ALL ELECTRICAL WORK SHALL COMPLY WITH THE NATIONAL ELECTRICAL CODE, AND APPLICABLE CITY, COUNTY, STATE AND FEDERAL CODES.

IT SHALL BE THE RESPONSIBILITY OF THE CONTRACTOR TO MAINTAIN SAFE AND SATISFACTORY ACCESS TO ALL ABUTTING PROPERTIES TO THE PROJECT SITE. ADJACENT ROADS SHALL BE MAINTAINED AND KEPT CLEAN OF MUD AND OTHER DEBRIS THAT MAY BE CAUSED BY TRAFFIC EXITING THE WORK SITE. THE CONTRACTOR SHALL COORDINATE AND PROVIDE FOR ALL NECESSARY TRAFFIC CONTROL. TRAFFIC CONTROL SHALL FOLLOW THE MORE STRINGENT GUIDELINES OF THE CITY OF MASSILLON OR ODOT AT THE DESCREATION OF THE CITY OF MASSILLON ENGINEER.

IT SHALL BE THE RESPONSIBILITY OF THE CONTRACTOR TO PROVIDE AND MAINTAIN FACILITIES FOR A CONSTRUCTION OFFICE, EMPLOYEE PARKING, AND EMPLOYEE SANITARY FACILITIES. ON STREET PARKING WILL NOT BE PERMITTED. THE CONTRACTOR SHALL PROVIDE FOR THE LAWFUL OFF-SITE DISPOSAL OF DEMOLITION DEBRIS AND CONSTRUCTION WASTE.

NW NE SW SE N

VERTICAL IN FEET 1 0.5 0

0 0.5 1
HORIZONTAL SCALE IN FEET

CHECKED BY: KAD
DATE: MAY, 2012
DRAWN BY: FPW
DATE: MAY, 2012

REVISIONS:

DATE	DESCRIPTION

9th St SW Improvement Project
Genral Notes
City of Massillon
Stark County, Ohio

Kathy Catazaro-Perry, Mayor
Massillon
City of Champions

DRAWING NAME: SHT1-9thgn1.DWG
CITY NUMBER: 09st01

CONTRACTOR AVAILABILITY

THE CONTRACTOR SHALL SUPPLY THE ENGINEER WITH A 24 HOUR PHONE NUMBER WHERE THE CONTRACTOR SHALL BE AVAILABLE FOR EMERGENCIES.

RESTORATION

FOR SANITARY SEWER INSTALLED, TESTED, AND ACCEPTED UP TO MAY 15TH OF ANY CALENDAR YEAR, RESTORATION SHALL BE COMPLETE BY JUNE 30th OF THAT YEAR. FOR INSTALLATION OF SANITARY SEWER TESTED AND ACCEPTED FROM MAY 15th TO SEPTEMBER 30th OF ANY CALANDAR, YEAR RESTORATION SHALL BE COMPLETE BY NOVEMBER 15th OF THAT CALENDAR YEAR. FOR SANITARY SEWER INSTALLED, TESTED, AND ACCEPTED AFTER NOVEMBER 15TH OF ANY CALENDAR YEAR. RESTORATION SHALL BE COMPLETE BY MAY 15th OF THE NEXT CALENDAR YEAR.

ALL SOIL AREAS DISTURBED BY THE CONTRACTOR SHALL BE TOPSOILED, SEEDED AND MULCHED. COST TO BE INCLUDED IN THE UNIT PRICE BID FOR EACH ITEM OF AFFECTED WORK. TOPSOIL, SEEDING AND MULCHING SHALL NOT BE A SEPARATE PAY ITEM. THIS INCLUDES BACKFILLING, SEEDING AND MULCHING ALONG THE EDGE OF ALL PAVEMENT RESTORATION.

CONTRACTOR TO REPLACE ALL PAVEMENT MARKINGS. COST TO BE INCLUDED IN THE UNIT PRICE BID FOR PAVEMENT.

CONTRACTOR TO USE HOT APPLIED JOINT CRACK SEALER ON ASPHALT PAVEMENT AT ALL ENDS AND INTERSECTIONS.

REMOVAL AND RELOCATION OF EXISTING UTILITIES

THE CONTRACTOR IS REQUIRED TO COOPERATE WITH EACH RESPECTIVE UTILITY OWNER FOR THE REMOVAL AND RELOCATION OF ANY AND ALL UTILITIES THAT CREATE A CONFLICT WITH CONSTRUCTION OF THE PROJECT.

ITEM 623. CONSTRUCTION STAKING

CONTRACTOR IS RESPONSIBLE FOR ALL CONSTRUCTION LAYOUT. THIS WORK IS TO BE PAID UNDER ITEM 623 CONSTRUCTION STAKING.

EXISTING DATA

EACH CONTRACTOR SHALL VISIT THE SITE PERSONALLY TO ASCERTAIN THE NATURE OF THE WORK AND BECOME THOROUGHLY FAMILIARIZED WITH THE SITE PRIOR TO BID SUBMISSION.

EXISTING STRUCTURES, GRADES, PIPING, ETC. ARE INDICATED IN APPROXIMATE LOCATION ON THE PLAN. INFORMATION SHOWN IS NOT GUARANTEED TO BE CORRECT AND COMPLETE. THE DATA SHALL BE VERIFIED IN THE FIELD BY THE CONTRACTOR. THE EXISTENCE OF FACILITIES ABOVE OR BELOW GROUND, WHICH MAY NOT BE SHOWN, WILL NOT BE A BASIS FOR A CLAIM FOR EXTRA WORK.

EXISTING UNDERGROUND UTILITIES SHOWN ARE RECORDS PROVIDED BY UTILITY COMPANIES AND ARE APPROXIMATE ONLY. SERVICE LATERALS ARE NOT SHOWN.

IT IS THE RESPONSIBILITY OF CONTRACTOR TO NOTIFY THE CITY, PRIOR TO BID OPENING OF NON-CONFORMING OR CONFLICTING INFORMATION.

EXCAVATED MATERIAL

ALL EXCAVATED MATERIAL AND ALL MATERIAL USED IN CONSTRUCTION OF THE WORK SHALL BE PILED AND STORED IN A MANNER THAT WILL NOT ENDANGER THE WORK AND THAT WILL LEAVE DRIVEWAYS OR OTHER CONTROLS UNOBSTRUCTED AND ACCESSIBLE WHILE THE WORK IS TO BE COMPLETED. SATISFACTORY PROVISIONS SHALL BE MADE FOR STREET DRAINAGE, AND NATURAL WATERCOURSES SHALL NOT BE OBSTRUCTED. DURING THE PROGRESS OF THE WORK, ALL MATERIAL PILES SHALL BE KEPT TRIMMED UP AND MAINTAINED IN A NEAT MANNER. ALL EXCAVATED WASTE MATERIAL SHALL BE REMOVED FROM THE PROJECT SITE, AS DIRECTED BY THE ENGINEER. THE WASTE SITE IS TO BE PROVIDED BY THE CONTRACTOR AT NO COST TO THE CITY, UNLESS OTHERWISE NOTED IN THE SPECIFICATIONS ALONG WITH A LETTER FROM THE PROPOSED WASTE SITE OWNER SITE, AS DIRECTED BY THE ENGINEER. THE WASTE SITE IS TO BE PROVIDED BY THE CONTRACTOR AT NO COST TO THE CITY, PERMITTING SUCH AND HOLDING THE CITY HARMLESS.

DOWN SPOUTS

ALL DOWN SPOUTS UNABLE TO BE CONNECTED TO THE STORM LATERAL SHALL BE CORE DRILLED THROUGH THE CURB AS PER ENGINEER'S DIRECTION.

CURB OPENING SHALL NOT GREATER THAN A 3 1/2" DIAMETER.

THE WORK ABOVE SHALL BE INCLUDED IN THE CONTRACT PRICE FOR ITEM 609.

WORKING AREA

NO EXCAVATION WITH SIDE SLOPES STEEPER THAN 2:1 AND/OR DEEPER THAN 2' WILL BE PERMITTED. OPEN CASTINGS AND PIPES SHALL BE LEFT SECURED WHEN THE SITE IS UNATTENDED BY THE CONTRACTOR. THE CONTRACTOR SHALL SECURE ALL SUCH EXCAVATIONS, OPEN CASTINGS AND PIPES AGAINST UNAUTHORIZED ENTRY COVERING WITH STEEL PLATES, TEMPORARY BACK FILLING, FENCING AND SECURITY SERVICES SHALL BE INCLUDED IN THE PRICE BID FOR THE WORK.

ITEM 207SPEC EROSION CONTROL

THE CONTRACTOR SHALL PREPARE AND SUBMIT A STORM WATER POLLUTION CONTROL PLAN TO THE CITY OF MASSILLON ENGINEER TO BE FORWARDED TO THE APPROPRIATE PERMITTING AGENCIES. SAID PLAN MUST COMPLY WITH THE MOST CURRENT RULES AND REGULATIONS OF THE CITY OF MASSILLON.

THE CONTRACTOR SHALL BE RESPONSIBLE FOR CONSTRUCTING AND MAINTAINING STORM WATER POLLUTION CONTROL PLAN 24 HOURS A DAY FOR THE DURATION OF THIS PROJECT. ALL DEVICES (SILT FENCE, INLET PROTECTION, ROCK CHANNEL, ETC.) SHALL BE FURNISHED, ERECTED, MAINTAINED, AND REMOVED BY THE CONTRACTOR.

THIS WORK SHALL BE INCLUDED IN THE LUMP SUM PRICE FOR ITEM 207SPEC – EROSION CONTROL

CONDITIONS OF WORK

ALL WORK PERFORMED UNDER THIS CONTRACT SHALL COMPLY WITH THE U.S. DEPARTMENT OF LABOR, OCCUPATIONAL SAFETY AND HEALTH ACT, STATE, COUNTY, AND CITY OF MASSILLON LAWS AND REGULATIONS. ALL WORK, AT ALL TIMES SHALL BE SUBJECT TO OBSERVATION BY THE OWNER AND/OR ENGINEER. ALL WORK SHALL COMPLY WITH THE CONDITIONS OF THE CONTRACT DOCUMENTS, OHIO EPA, AND STANDARDS OF THE CITY OF MASSILLON. ALL ELECTRICAL WORK SHALL COMPLY WITH THE NATIONAL ELECTRICAL CODE, AND APPLICABLE CITY, COUNTY, STATE AND FEDERAL CODES.

IT SHALL BE THE RESPONSIBILITY OF THE CONTRACTOR TO MAINTAIN SAFE AND SATISFACTORY ACCESS TO ALL ABUTTING PROPERTIES TO THE PROJECT SITE. ADJACENT ROADS SHALL BE MAINTAINED AND KEPT CLEAN OF MUD AND OTHER DEBRIS THAT MAY BE CAUSED BY TRAFFIC EXITING THE WORK SITE. THE CONTRACTOR SHALL COORDINATE AND PROVIDE FOR ALL NECESSARY TRAFFIC CONTROL. TRAFFIC CONTROL SHALL BE IN ACCORDANCE WITH CURRENT CITY OF MASSILLON RULES AND REGULATIONS AND THE OHIO MANUAL OF UNIFORM TRAFFIC CONTROL DEVICES.

IT SHALL BE THE RESPONSIBILITY OF THE CONTRACTOR TO PROVIDE AND MAINTAIN FACILITIES FOR A CONSTRUCTION OFFICE, EMPLOYEE PARKING, AND EMPLOYEE SANITARY FACILITIES. ON STREET PARKING WILL NOT BE PERMITTED. THE CONTRACTOR SHALL PROVIDE FOR THE LAWFUL OFF-SITE DISPOSAL OF DEMOLITION DEBRIS AND CONSTRUCTION WASTE.

REMOVAL OF TREES OR STUMPS

ALL TREES AND STUMPS REMOVED DURING CONSTRUCTION SHALL BE UNDER THE LUMP SUM BID FOR ITEM 201, CLEARING AND GRUBBING. THIS SHALL INCLUDE ALL TREES AND STUMPS WITHIN THE CONSTRUCTION LIMITS UNLESS OTHERWISE STATED BY CITY REPRESENTATIVE.

CONCRETE REMOVAL

ALL EXISTING CONCRETE INCLUDING CURBS, DRIVES, AND BASE ETC. WITHIN WORK LIMITS SHALL BE REMOVED AND PAID FOR UNDER:

ITEM 203 EXCAVATION INCLUDING ROADWAY

ITEM 614SPEC MAINTAINING TRAFFIC

THE CONTRACTOR SHALL BE RESPONSIBLE FOR DESIGNING AND MAINTAINING SAFE AND EFFECTIVE TRAFFIC CONTROL 24 HOURS A DAY FOR THE DURATION OF THIS PROJECT. ALL TRAFFIC CONTROL DEVICES (PAVEMENT MARKINGS, SIGNS, BARRELS, CONES, ETC.) SHALL BE FURNISHED, ERECTED, MAINTAINED, AND REMOVED BY THE CONTRACTOR.

THE CONTRACTOR SHALL DEVISE A MAINTENANCE OF TRAFFIC SCHEME WHICH SHALL BE STAMPED BY A PROFESSIONAL ENGINEER, AND PRESENT IT TO THE ENGINEER FOR APPROVAL. THE MAINTENANCE OF TRAFFIC SCHEME SHALL PRESENT, IN GENERAL, THE METHOD FOR CONDUCTING THE REQUIRED WORK IN A SAFE AND EFFICIENT MANNER.

THE PLANS SHALL INCLUDE THE FOLLOWING COMPONENTS:

PLAN VIEW AT AN APPROPRIATE SCALE TO SHOW:
- WORK AREA
- BEGIN/END STATIONING OF TAPERS, TEMPORARY MARKINGS, ETC.
- TEMPORARY PAVEMENT
- LOCATIONS OF SIGNS (EXISTING OVERHEAD SIGNS AND ALL PROPOSED, COVERED, OR MODIFIED SIGNS)
- LOCATIONS OF TYPICAL SECTIONS
- REFERENCES TO APPLICABLE STANDARD DRAWINGS

TYPICAL SECTIONS SHOWING:
- LANE WIDTHS, PAVEMENT MARKINGS, DRUMS, PCB, ETC.
- LIMITING STATIONS
- WORK AREA AND DROP-OFFS

SIGN DETAILS FOR PROPOSED SIGNS AND OVERLAYS/MODIFICATIONS

THE MAINTENANCE OF TRAFFIC SCHEME SHALL BE IN CONFORMANCE WITH THE OHIO MANUAL OF UNIFORM TRAFFIC CONTROL DEVICES, LATEST REVISION, THE REFERENCED STANDARD CONSTRUCTION DRAWINGS INCLUDING DESIGNER NOTES, THE CONSTRUCTION AND MATERIAL SPECIFICATIONS (CMS), POLICY NO. 516-003(P) TRAFFIC MANAGEMENT IN WORK ZONES INTERSTATE AND OTHER FREEWAYS, ODOT LOCATION AND DESIGN MANUAL, VOLUME 1, AND ALL REQUIREMENTS DETAILED IN THESE PLANS.

THIS SUBMITTAL SHALL CONSIST OF THREE (3) COPIES OF THE PLANS FOR REVIEW AND DISTRIBUTION. NO WORK SHALL BEGIN AT THE LOCATION UNTIL THE MAINTENANCE OF TRAFFIC PLANS HAVE BEEN APPROVED BY THE CITY OF MASSILLON ENGINEER.

THE PROGRESS SCHEDULE WILL BE REQUIRED TO APPROVE THE MAINTENANCE OF TRAFFIC PLANS. THIS SCHEDULE OF OPERATIONS SHALL DETAIL THE CONTRACTOR'S WORK ACTIVITIES AND HIS METHODS OF MAINTAING TRAFFIC DURING THESE ACTIVITIES. MAINTENANCE OF TRAFFIC PLANS SHALL BE PREPARED AND SUBMITTED TO THE CITY OF MASSILLON ENGINEER FOR APPROVAL. THESE PLANS SHALL BE SEALED BY A REGISTERED PRFESSIONAL ENGINEER. THE CITY SHALL HAVE 14 CALENDAR DAYS TO REVIEW AND COMMENT ON THESE PLANS. THE CONTRACTOR SHALL NOT BEGIN ANY WORK REQUIRING TRAFFIC CONTROL UNTIL THE ENGINEER HAS GIVEN APPROVAL OF THE CONTRACTOR'S SEQUENCE OF OPERATIONS AND MAINTENANCE OF TRAFFIC PLANS.

THE MAINTENANCE OF TRAFFIC SCHEME SHALL TAKE INTO CONSIDERATION SNOW AND ICE OPERATIONS FROM DECEMBER 1 THROUGH MARCH 31. LANE SHIFTS, RESTRICTIONS, AND CLOSURES MAY NOT BE APPROVED IF THEY ADVERSELY AFFECT SNOW REMOVAL OPERATIONS.

THIS WORK SHALL BE INCLUDED IN THE LUMP SUM PRICE FOR ITEM 614 – MAINTAINING TRAFFIC, AS PER PLAN.

ITEM 651. TOPSOIL STOCKPILED

THE MATERIAL FOR THIS ITEM SHALL BE OBTAINED FROM AREAS WITHIN THE PROPOSED RIGHT-OF-WAY.

PROVISION OF THIS 651 ITEM SHALL NOT BE CONSTRUED AS A WAIVER OF THE PROVISIONS OF 201.4 SOD AND INCIDENTAL TOPSOIL REMOVED ELSEWHERE ON THIS PROJECT FOR SALVAGE AND FOR USE AS DESCRIBED IN 203.04(e). THIS ITEM SHALL BE INCLUDED IN THE CONTRACT PRICE FOR VARIOUS 203 ITEMS.

PRESERVATION OF EXISTING UTILITY SERVICES

ANY EXISTING WATER LINE, SANITARY SEWER, STORM SEWER, GAS LINE OR OTHER UTILITY IN OR OUTSIDE OF THE CONSTRUCTION LIMITS, DAMAGED DURING CONSTRUCTION OF THE PROPOSED PROJECT, WILL BE REPLACED AT THAT CONTRACTORS EXPENSE.

MANHOLES, CATCH BASINS, INLETS AND PIPES REMOVED OR ABANDONED

ALL CASTING, PRE-CAST STRUCTURES AND PIPES SHALL BE CAREFULLY REMOVED AND STORED WITHIN THE RIGHT-OF-WAY FOR SALVAGE BY THE CITY. CONTACT THE CITY OF MASSILLON STREET SUPERINTENDENT – 330-833-5746. ANY UNWANTED MATERIALS SHALL BE DISPOSED OF BY THE CONTRACTOR.

PAYMENT FOR ALL OF THE ABOVE SHALL BE INCLUDED IN THE CONTRACT PRICE FOR THE PERTINENT 202 ITEM.

ITEM 609. CAST IN PLACE 6"X18" CONCRETE CURB

GRANULAR BEDDING, BACKFILLING AND CONCRETE CURB PLACEMENT ALONG WITH ALL APPURTENANCES IS TO BE INCLUDED IN ITEM 609. THIS SHALL ALSO INCLUDE THE REPLACEMENT AND REMOVAL OF ALL WALK EXTENTSION DISTURB DO TO CURB PLACEMENT

RESIDENTIAL AND COMMERCIAL DRAINAGE CONNECTIONS

EACH LOT SHALL BE SUPPLIED WITH A SINGLE 10" STORM LATERAL THAT WILL BE INSTALLED FROM THE MAIN TO THE PROPERTY LINE, SAID STORM LATERAL SHALL BE CONNECTED TO FOUNDATION DRAINS, SUMP DRAIN AND WHEN POSSIBLE AS PER ENGINEER'S DIRECTION THE DOWN SPOUT WILL BE CONNECTED.

THE FOLLOWING WORK SHALL BE PAID FOR UNDER ITEM 603 10" STORM LATERAL.

ITEM SPECIAL – FILL AND PLUG EXISTING CONDUIT

THIS ITEM SHALL CONSIST OF THE CONSTRUCTION OF BULKHEADS IN AN EXISTING CONDUIT AND FILLING THE AREA THUS SEALED OFF WITH LEANOR CLEAN GROUT, ITEM 613, SAND OR OTHER MATERIAL APPROVED BY THE ENGINEER.

BULKHEADS SHALL BE LOCATED AT THE LIMITS OF THE AREA TO BE FILLED AS INDICATED ON THE PLANS. THE BULKHEADS SHALL CONSIST OF BRICK OR CONCRETE MASONRY WITH A MINIMUM THICKNESS OF 12 INCHES.

THE FILL MATERIAL SHALL BE PUMPED INTO PLACE, OR PLACED BY OTHER MEANS APPROVED BY THE ENGINEER. SO THAT, AFTER SETTLEMENT,

AT LEAST 90 PERCENT OF THE CROSS-SECTIONAL AREA OF THE CONDUIT, FOR ITS ENTIRE LENGTH, SHALL BE FILLED. THE LENGTH OF FILLED AND PLUGGED CONDUIT TO BE PAID FOR SHALL BE THE ACTUAL NUMBER OF LINEAR FEET (MEASURED ALONG THE CENTERLINE OF EACH CONDUIT FROM OUTER FACE TO OUTER FACE OF BULKHEADS) FILLED AND PLUGGED AS DESCRIBED ABOVE.

IN LIEU OF FILLING AND PLUGGING THE EXISTING CONDUIT, THE PIPE MAY BE CRUSHED AND BACKFILLED IN ACCORDANCE WITH THE PROVISIONS OF 203, OR IT MAY BE REMOVED.

THE LENGTH, MEASURED AS PROVIDED ABOVE, SHALL BE PAID FOR AT THE CONTRACT PRICE PER LINEAR FOOT FOR, ITEM SPECIAL, FILL AND PLUG EXISTING CONDUIT.

FINAL APPROVAL

A VIDEO IN THE FORM OF DVD WILL BE MADE BY THE CONTRACTOR AND SUBMITTED TO THE CITY OF MASSILLON ENGINEER PRIOR TO THE PROJECT COMMENCING. AFTER THE FINAL INVOICE IS SUBMITTED THE SITE SHALL BE VIDEOED AGAIN BY THE CONTRACTOR. ANY DISCREPANCIES WILL BE RESOLVED PRIOR TO FINAL PAYMENT. AS BUILT DRAWINGS SHALL BE CREATED BY THE CONTRACTOR AND SUBMITTED TO THE CITY OF MASSILLON ENGINEER IN A CLEAR AND LEGENDABLE MANNER PRIOR TO FINAL INVOICE.

COST OF THIS WORK SHALL BE INCLUDED IN ITEM 623 CONSTRUCTION STAKING

NW NE N SW SE

VERTICAL IN FEET 1 0.5 0

0 0.5 1
HORIZONTAL SCALE IN FEET

CHECKED BY: KAD
DATE: MAY, 2012
DRAWN BY: FPW
DATE: MAY, 2012

REVISIONS:

DATE	DESCRIPTION

9th St SW Improvement Project
Genral Notes
City of Massillon
Stark County, Ohio

Kathy Catazaro-Perry, Mayor
Massillon
City of Champions

DRAWING NAME: SHT1-9thgn2.DWG
CITY NUMBER: 09st01

GENERAL SUMMARY

SHEET No. 4	6	7	8	9	10	11	12	13	14	15	16	17	35	36	37		ITEM	GRAND TOTAL	UNIT	DESCRIPTION
																				ROADWAY
LUMP																	201SPEC	LUMP	LUMP	CLEARING AND GRUBBING
					32						43						202	75	LF	PIPE REMOVED
											1						202	1	EACH	CATCH BASIN REMOVED
												7068					203	6078	CY	ROADWAY EXCAVATION
												704					203	704	CY	EMBANKMENT
															600		203SPEC	600	LF	DITCH GRADING
																	204	12120	SY	SUBGRADE COMPACTION
																	204	4	HOURS	EMBANKMENT
																				DRAINAGE
		36	232	36	33	30	60	30	378	378	72						603	1285	LF	12" TYPE B CONDUIT
					15												603	15	LF	15" TYPE B CONDUIT
			328	513													603	841	LF	18" TYPE B CONDUIT
						325	473	85							100		603	983	LF	24" TYPE B CONDUIT
250																	603SPEC	250	LF	PIPE CLEANOUT
		1							1	1	1						604	4	EACH	CATCH BASIN TYPE MASS V5622
																	604	2	EACH	CATCH BASIN TYPE MASS V5630
		2	1	1	3	2	4	2	1	1	1						604	18	EACH	CATCH BASIN MASS7030
															1		604	1	EACH	HEADWALL TYPE: HW 2.1
			2	2		1	2	1									604	6	EACH	DRAINAGE MANHOLE MASS1048
											1						604	1	EACH	DRAINAGE MANHOLE MASS1048-R
	7202																605	7202	LF	4" SHALLOW PIPE UNDERDRAIN
																				PAVEMENT
													100				251	100	SY	PARTIAL DEPTH PAVEMENT REPAIR
													100				253	100	SY	FULL DEPTH PAVEMENT REPAIR
	2961																254	2961	SY	2" PAVEMENT PLANING
	2840																301	2840	CY	ASPHALT CONCRETE BASE
	2020																304	2020	CY	AGGREGATE BASE
	2043																407	2043	GAL	TACK COAT (0.10 GAL/SG YD)
	4527																407	4527	GAL	PRIME COAT (0.40 GAL/SG YD)
	474																448	474	CY	ASPHALT CONCRETE INTERMEDIATE, TYPE 1, PG64-22
	627																448	627	CY	ASPHALT CONCRETE SURFACE, TYPE 1, PG64-22
														542			448SPEC	542	SY	ASPHALT DR (B)
														40			452SPEC	40	SY	CONCRETE DR (A)
	7202																609	7202	LF	CONCRETE CURB, TYPE 6
																	705	100	GAL	JOINT SEALER
																				SANITARY
					1	1		2									604	4	EACH	SANITARY MANHOLE MASS1048-AGS-R
																				EROSION CONTROL
LUMP																	207SPEC	1	EACH	EROSION CONTROL
															1		601	1	C.Y.	ROCK CHANNEL PROTECTION W/ FILTER
																	659	LUMP	LUMP	TOP SOIL SEEDING AND MULCHING
																				MAINTENANCE OF TRAFFIC
																	614SPEC	LUMP	LUMP	MAINTAINING TRAFFIC, AS PER PLAN
																				TRAFFIC CONTROL
																	630	LUMP	LUMP	SIGN REMOVAL STORAGE AND REERECTION
																				INCIDENTALS
																	619	LUMP	LUMP	FIELD OFFICE
LUMP																	623	LUMP	LUMP	CONSTRUCTION STAKING
																	624	LUMP	LUMP	MOBILIZATION

NW NE SW SE N

VERTICAL IN FEET 1 0.5 0

0 0.5 1
HORIZONTAL SCALE IN FEET

CHECKED BY: KAD
DATE: MAY, 2014
DRAWN BY: FPW
DATE: MAY, 2014

REVISIONS:

DATE	DESCRIPTION

9th St SW Improvement Project
General Summary
City of Massillon
Stark County, Ohio

Kathy Catazaro-Perry, Mayor
Massillon City of Champions

DRAWING NAME: SHT4a-9thgsum.dwg
CITY NUMBER: 10ss03

ITEM 254 2" PAVEMENT PLANING

(9th St. SW) Sta. 36+15.95 to Sta. 37+77.72 (7640.28) (1/9)	848.92 SQ YD
(9th St. SW) Sta. 42+50 to Sta. 50+15) (19003.06) (1/9)	2111.47 SQ YD
TOTAL ITEM 254 =	**2960.39 SQ YD**
USED:	**2961 SQ YD**

ITEM 301 ASPHALT CONCRETE BASE

9th St. SW Sta. 8+50 to Sta. 9+80) (3475) (9/12) (1/27)	96.53 CU YD
(9th St. SW) Sta. 9+80 to Sta. 36+00) (2620) (30) (9/12) (1/27)	2183.33 CU YD
(9th St. SW) Sta. 36+00 to Sta. 36+15.95) (15.95) [(30+35) 1/2] (9/12) (1/27)	14.40 CU YD
(9th St. SW) Sta. 36+15.95 to Sta. 37+77.72) (161.77) (2) (9/12) (1/27)	8.99 CU YD
(9th St. SW) Sta. 37+77.72 to Sta. 38+00) (22.28) [(34+30) 1/2] (9/12) (1/27)	19.81 CU YD
(9th St. SW) Sta. 38+00 to Sta. 40+46.87) (246.87) (30) (9/12) (1/27)	205.73 CU YD
(9th St. SW) Sta. 40+46.87 to Sta. 42+50) (5724) (9/12) (1/27)	159.00 CU YD
(9th St. SW) Sta. 40+50 to Sta. 50+15) (765) (4) (9/12) (1/27)	85.00 CU YD
(Industrial Ave SW) (2375.15) (9/12) (1/27)	65.98 CU YD
TOTAL ITEM 301 =	**2838.77 CU YD**
USED:	**2840 CU YD**

ITEM 304 AGGREGATE BASE

9th St. SW Sta. 8+50 to Sta. 9+80) (3603.31) (6/12) (1/27)	66.73 CU YD
(9th St. SW) Sta. 9+80 to Sta. 36+00) (2620) (32) (6/12) (1/27)	1552.59 CU YD
(9th St. SW) Sta. 36+00 to Sta. 36+15.95) (15.95) [(32+37) 1/2] (6/12) (1/27)	10.19 CU YD
(9th St. SW) Sta. 36+15.95 to Sta. 37+77.72) (161.77) (3) (6/12) (1/27)	8.99 CU YD
(9th St. SW) Sta. 37+77.72 to Sta. 38+00) (22.28) [(36+32) 1/2] (6/12) (1/27)	14.03 CU YD
(9th St. SW) Sta. 38+00 to Sta. 40+46.87) (246.87) (32) (6/12) (1/27)	146.29 CU YD
(9th St. SW) Sta. 40+46.87 to Sta. 42+50) (5926.82) (6/12) (1/27)	109.76 CU YD
(9th St. SW) Sta. 42+50 to Sta. 50+15) (765) (4.5) (6/12) (1/27)	63.75 CU YD
(Industrial Ave SW) (2541.66) (6/12) (1/27)	47.07 CU YD
TOTAL ITEM 304 =	**2019.40 CU YD**
USED:	**2020 CU YD**

ITEM 407 TACK COAT(SURFACE COURSE)

9th St. SW Sta. 8+50 to Sta. 9+80) (3475) (1/9) (0.08)	30.89 GAL.
(9th St. SW) Sta. 9+80 to Sta. 36+00) (2620) (30) (1/9) (0.08)	698.67 GAL.
(9th St. SW) Sta. 36+00 to Sta. 36+15.95) (15.95) [(30+35) 1/2] (1/9) (0.08)	4.61 GAL.
(9th St. SW) Sta. 36+15.95 to Sta. 37+77.72) (7640.28) (1/9) (0.08)	67.92 GAL.
(9th St. SW) Sta. 37+77.72 to Sta. 38+00) (22.28) [(34+30) 1/2] (1/9) (0.08)	6.34 GAL.
(9th St. SW) Sta. 38+00 to Sta. 40+46.87) (246.87) (30) (1/9) (0.08)	65.83 GAL.

CONTINUE ITEM 407 TACK COAT(SURFACE COURSE)

(9th St. SW) Sta. 40+46.87 to Sta. 42+50) (5724) (1/9) (0.08)	50.88 GAL.
(9th St. SW) Sta. 42+50 to Sta. 50+10) (21293.19) (1/9) (0.08)	189.27 GAL.
(Industrial Ave SW) (2375.15) (1/9) (0.08)	21.12 GAL.
TOTAL ITEM 407 =	**1135.53 Gal.**
USED:	**1136 Gal.**

ITEM 407 TACK COAT(INTERMEDIATE COURSE)

9th St. SW Sta. 8+50 to Sta. 9+80) (3475) (1/9) (0.08)	30.89 GAL.
(9th St. SW) Sta. 9+80 to Sta. 36+00) (2620) (30) (1/9) (0.08)	698.67 GAL.
(9th St. SW) Sta. 36+00 to Sta. 36+15.95) (15.95) [(30+35) 1/2] (1/9) (0.08)	4.61 GAL.
(9th St. SW) Sta. 36+15.95 to Sta. 37+77.72) (161.77) (2) (1/9) (0.08)	1.34 GAL.
(9th St. SW) Sta. 37+77.72 to Sta. 38+00) (22.28) [(34+30) 1/2] (1/9) (0.08)	6.34 GAL.
(9th St. SW) Sta. 38+00 to Sta. 40+46.87) (246.87) (30) (1/9) (0.08)	65.83 GAL.
(9th St. SW) Sta. 40+46.87 to Sta. 42+50) (5724) (1/9) (0.08)	50.88 GAL.
(9th St. SW) Sta. 42+50 to Sta. 50+10) (760) (4) (1/9) (0.08)	27.03 GAL.
(Industrial Ave SW) (2375.15) (1/9) (0.08)	21.12 GAL.
TOTAL ITEM 407 =	**906.71 Gal.**
USED:	**907 Gal.**

ITEM 408 PRIME COAT

9th St. SW Sta. 8+50 to Sta. 9+80) (3475) (1/9) (0.40)	154.45 GAL.
(9th St. SW) Sta. 9+80 to Sta. 36+00) (2620) (30) (1/9) (0.40)	3493.33 GAL.
(9th St. SW) Sta. 36+00 to Sta. 36+15.95) (15.95) [(30+35) 1/2] (1/9) (0.40)	23.04 GAL.
(9th St. SW) Sta. 36+15.95 to Sta. 37+77.72) (161.77) (2) (1/9) (0.40)	14.38 GAL.
(9th St. SW) Sta. 37+77.72 to Sta. 38+00) (22.28) [(34+30) 1/2] (1/9) (0.40)	31.69 GAL.
(9th St. SW) Sta. 38+00 to Sta. 40+46.87) (246.87) (30) (1/9) (0.40)	329.16 GAL.
(9th St. SW) Sta. 40+46.87 to Sta. 42+50) (5724) (1/9) (0.40)	239.87 GAL.
(9th St. SW) Sta. 42+50 to Sta. 50+10) (760) (4) (1/9) (0.40)	135.11 GAL.
(Industrial Ave SW) (2375.15) (1/9) (0.40)	105.57 GAL.
TOTAL ITEM 408 =	**4526.60 Gal.**
USED:	**4527 Gal.**

ITEM 448 ASPHALT CONCRETE INTERMEDIATE COURSE, TYPE 1

9th St. SW Sta. 8+50 to Sta. 9+80) (3475) (1.5/12) (1/27)	16.09 CU YD
(9th St. SW) Sta. 9+80 to Sta. 36+00) (2620) (30) (1.5/12) (1/27)	363.89 CU YD
(9th St. SW) Sta. 36+00 to Sta. 36+15.95) (15.95) [(30+35) 1/2] (1.5/12) (1/27)	2.40 CU YD
(9th St. SW) Sta. 36+15.95 to Sta. 37+77.72) (161.77) (2) (1.5/12) (1/27)	1.50 CU YD
(9th St. SW) Sta. 37+77.72 to Sta. 38+00) (22.28) [(34+30) 1/2] (1.5/12) (1/27)	3.30 CU YD

CONTINUE ITEM 448 ASPHALT CONCRETE INTERMEDIATE COURSE, TYPE 1

(9th St. SW) Sta. 38+00 to Sta. 40+46.87) (246.87) (30) (1.5/12) (1/27)	34.29 CU YD
(9th St. SW) Sta. 40+46.87 to Sta. 42+50) (5724) (1.5/12) (1/27)	26.50 CU YD
(9th St. SW) Sta. 42+50 to Sta. 50+15) (765) (4) (1.5/12) (1/27)	14.17 CU YD
(Industrial Ave SW) (2375.15) (9/12) (1/27)	11.00 CU YD
TOTAL ITEM 448 =	**473.14 CU YD**
USED:	**474 CU YD**

ITEM 448 ASPHALT CONCRETE SURFACE COURSE, TYPE 1

9th St. SW Sta. 8+50 to Sta. 9+80) (3475) (1.5/12) (1/27)	16.09 CU YD
(9th St. SW) Sta. 9+80 to Sta. 36+00) (2620) (30) (1.5/12) (1/27)	363.89 CU YD
(9th St. SW) Sta. 36+00 to Sta. 36+15.95) (15.95) [(30+35) 1/2] (1.5/12) (1/27)	2.40 CU YD
(9th St. SW) Sta. 36+15.95 to Sta. 37+77.72) (7640.28) (1.5/12) (1/27)	35.37 CU YD
(9th St. SW) Sta. 37+77.72 to Sta. 38+00) (22.28) [(34+30) 1/2] (1.5/12) (1/27)	3.30 CU YD
(9th St. SW) Sta. 38+00 to Sta. 40+46.87) (246.87) (30) (1.5/12) (1/27)	34.29 CU YD
(9th St. SW) Sta. 40+46.87 to Sta. 42+50) (5397) (1.5/12) (1/27)	24.99 CU YD
(9th St. SW) Sta. 42+50 to Sta. 50+10) (21293.19) (2/12) (1/27)	131.44 CU YD
(Industrial Ave SW) (2375.15) (2/12) (1/27)	14.67 CU YD
TOTAL ITEM 448 =	**626.44 CU YD**
USED:	**627 CU YD**

ITEM 609 CONCRETE CURB, TYPE 6

RIGHT	
(9th St. SW Sta. 9+80 to Sta. 42+50)	3270.00 LF
LEFT	
(9th St SW Sta. 9+80 to Sta. 22+47.69)	1267.69 LF
(Industrial 135.95 CALC.)	135.95 LF
(9th St SW. 23+65.14 to Sta. 36+15.95)	1250.81 LF
(9th St SW. 37+77.72 to Sta. 50+15)	1237.28 LF
(9th St SW. Flares)	40.00 LF
TOTAL ITEM 609 =	**7201.73 LF**
USED:	**7202 LF**

ITEM 605 4" SHALLOW PIPE UNDERDRAINS

RIGHT	
(9th St. SW Sta. 9+80 to Sta. 42+50)	3270.00 LF
LEFT	
(9th St SW Sta. 9+80 to Sta. 22+47.69)	1267.69 LF
(Industrial 135.95 CALC.)	135.95 LF
(9th St SW. 23+65.14 to Sta. 36+15.95)	1250.81 LF
(9th St SW. 37+77.72 to Sta. 50+15)	1237.28 LF
(9th St SW. Flares)	40.00 LF
TOTAL ITEM 605 =	**7201.73 LF**
USED:	**7202 LF**

NW NE SW SE

VERTICAL 1 IN FEET .5 0

0 .5 1
HORIZONTAL SCALE IN FEET

CHECKED BY: KAD
DATE: MAY, 2012
DRAWN BY: FPW
DATE: MAY, 2012

REVISIONS:

DATE	DESCRIPTION

9th St SW Improvement Project
Calculations
City of Massillon
Stark County, Ohio

Kathy Catazaro-Perry, Mayor
Massillon
City of Champions

DRAWING NAME: SHT6-9thcalc1.DWG
CITY NUMBER: 09st01

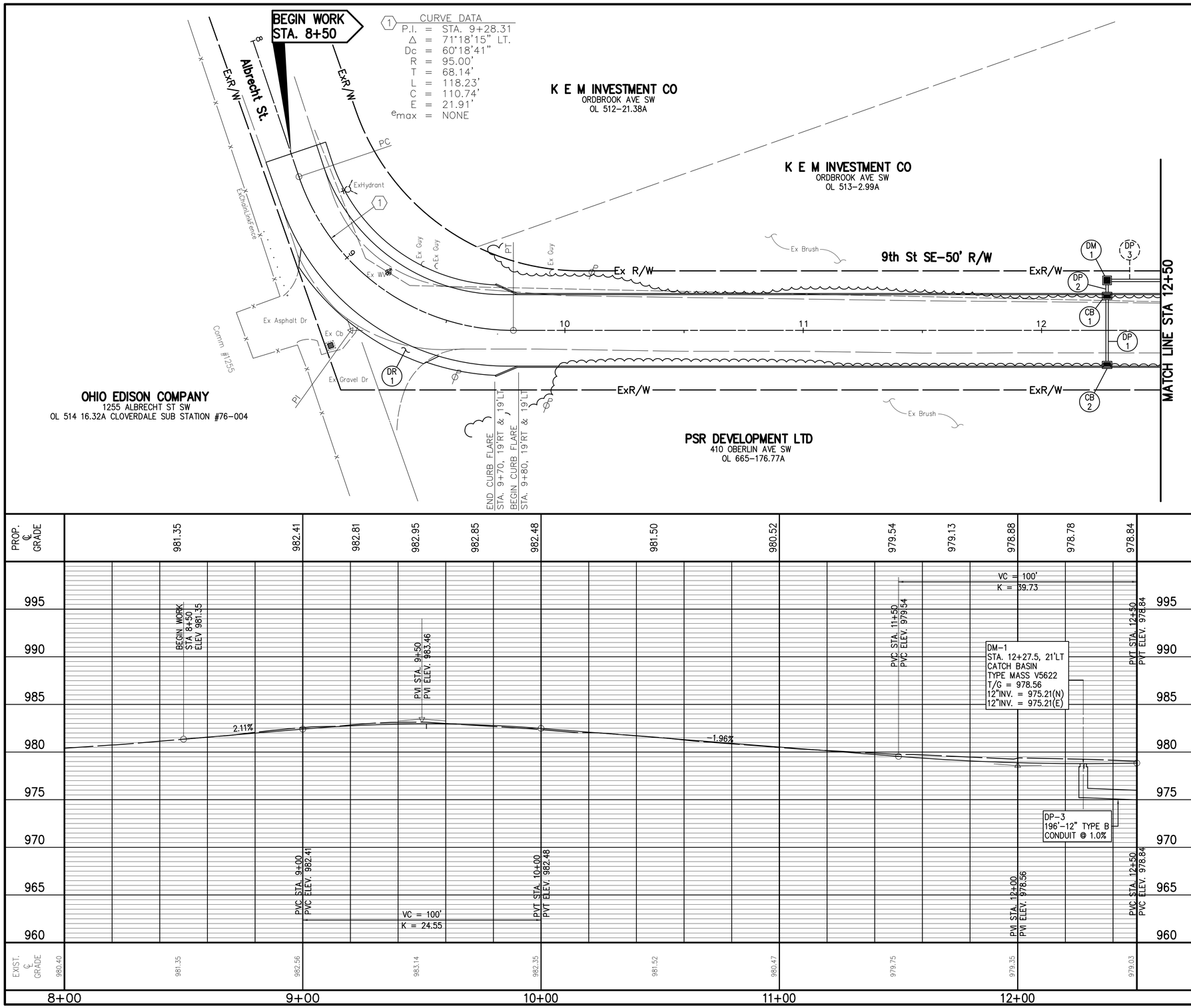

REF. No.	SIDE	STATION FROM	STATION TO	603 12" TYPE B CONDUIT LF	604 CATCH BASIN TYPE MASS 7030 EACH	604 CATCH BASIN TYPE MASS V5622 EACH
CB-1	LT	12+27.5			1	
CB-2	RT	12+27.5			1	
DM-1	LT	12+27.5				1
DP-1	RT/LT	12+27.5	12+27.5	30		
DP-2	LT	12+27.5	12+27.5	6		
TOTALS CARRIED TO GENERAL SUMMARY				36	2	1

HORIZONTAL SCALE IN FEET

VERTICAL IN FEET

CHECKED BY: KAD

DATE: MAY, 2014

DRAWN BY: FPW

DATE: MAY, 2014

REVISIONS:

DATE	DESCRIPTION

9th St. SW Improvement Project

9th St. SE Plan and Profile Sta. 8+00 and Sta. 12+50

City of Massillon
Stark County, Ohio

Kathy Catazaro-Perry, Mayor

Massillon
City of Champions

DRAWING NAME: SHT7-9thpp1.DWG

CITY NUMBER: 09st01

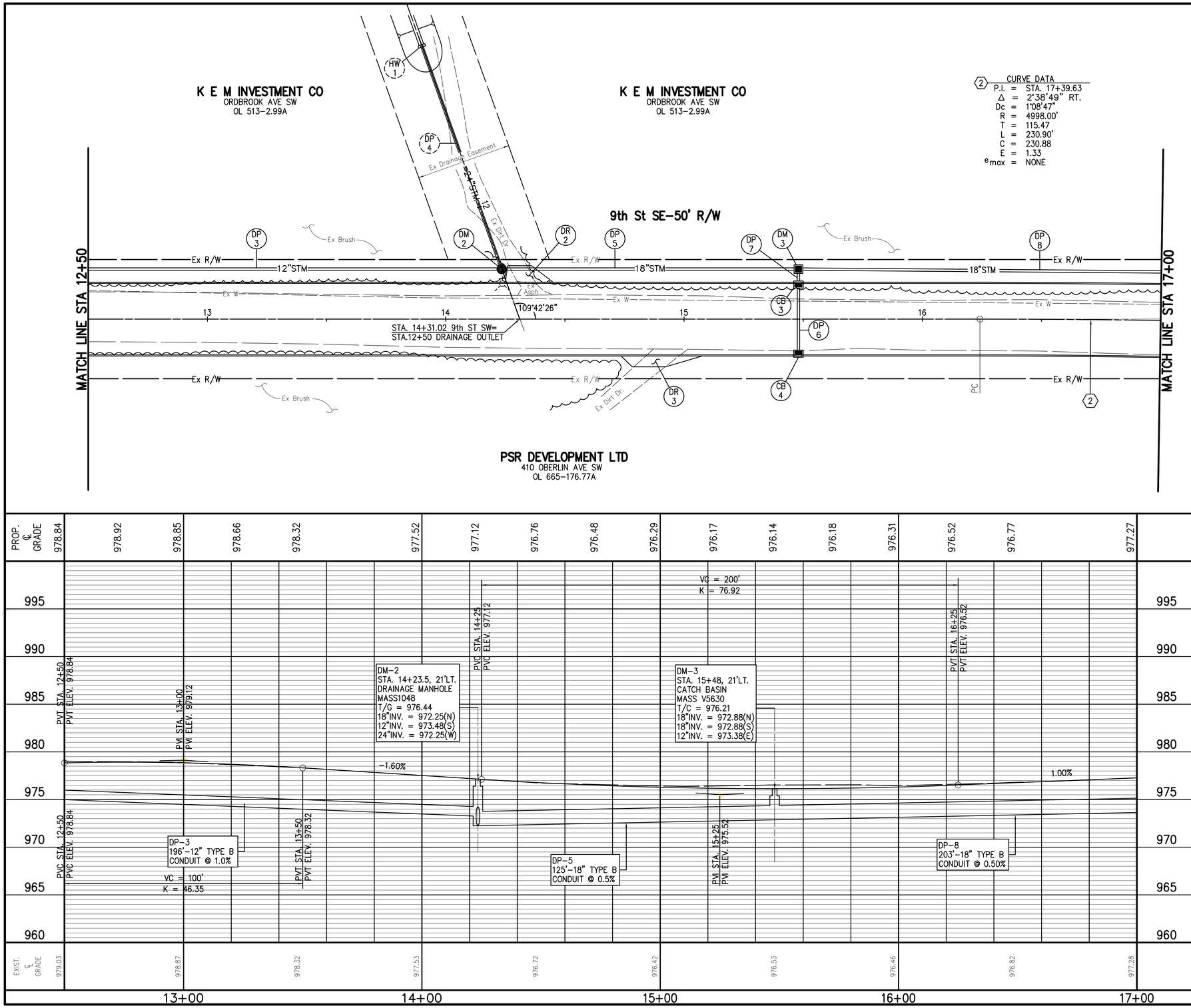

REF. No.	SIDE	STATION FROM	STATION TO	603 12" TYPE B CONDUIT (LF)	603 18" TYPE B CONDUIT (LF)	604 CATCH BASIN TYPE MASS 7030 (EACH)	604 CATCH BASIN TYPE MASS V5630 (EACH)	604 DRAINAGE MANHOLE MASS 1048 (EACH)
CB-3	LT	15+48				1		
CB-4	RT	15+48				1		
DM-1	LT	14+23.5						1
DM-2	LT	15+48					1	
DP-3	LT	12+27.5	14+23.5	196				
DP-5	LT	14+23.5	15+48		125			
DP-6	RT/LT	15+48	15+48	30				
DP-7	LT	15+48	15+48	6				
DP-8	LT	15+48	17+50		203			
TOTALS CARRIED TO GENERAL SUMMARY				232	328	2	1	1

VERTICAL IN FEET 0 10 20

HORIZONTAL SCALE IN FEET 0 10 20

CHECKED BY: KAD

DATE: MAY, 2014

DRAWN BY: FPW

DATE: MAY, 2014

REVISIONS:

DATE	DESCRIPTION

9th St. SW Improvement Project

9th St. SE Plan and Profile Sta. 12+50 and Sta. 17+00

City of Massillon
Stark County, Ohio

Kathy Catazaro-Perry, Mayor

Massillon City of Champions

DRAWING NAME: Sht8-9thPP2.DWG

CITY NUMBER: 09st01

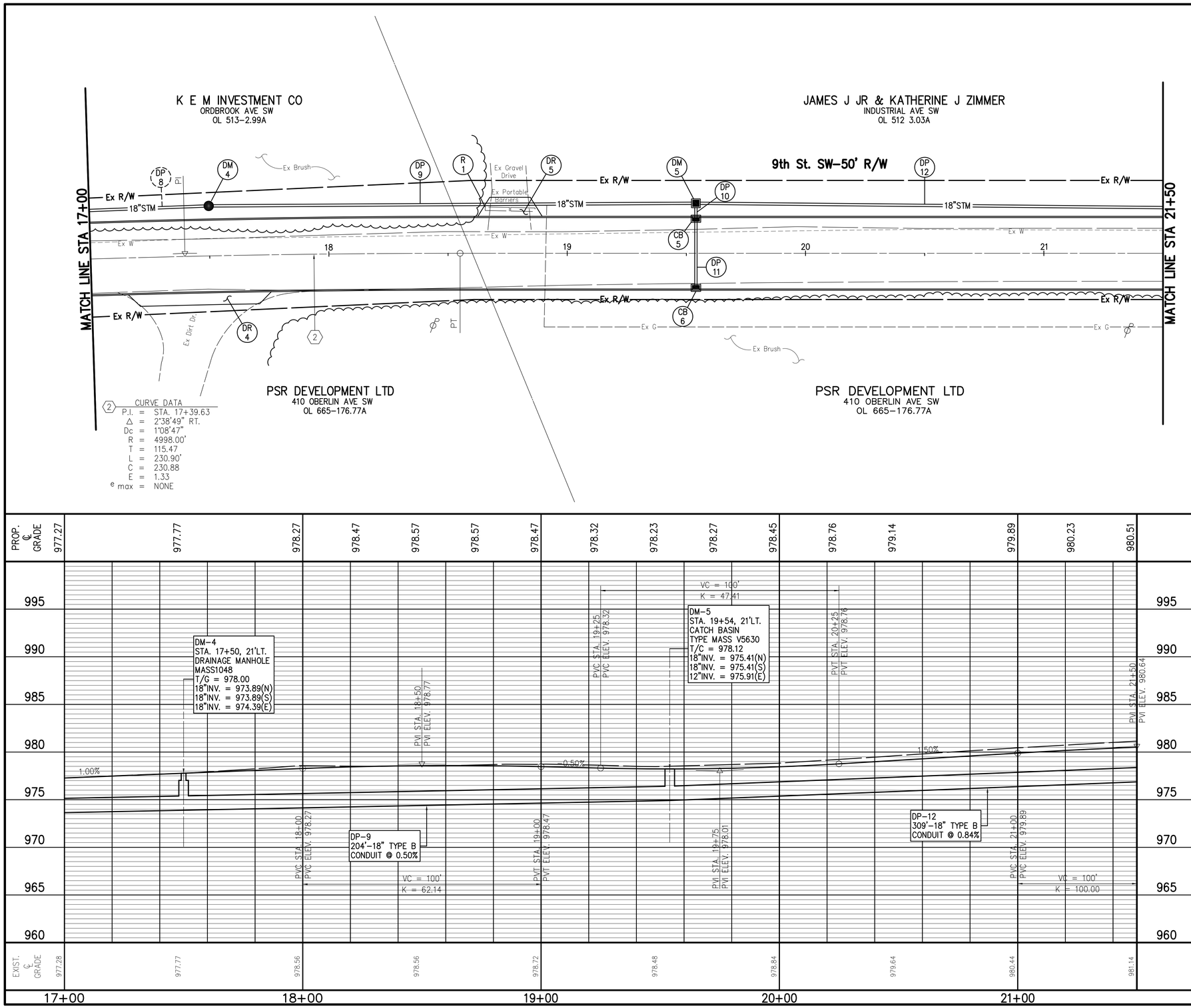

REF. No.	SIDE	STATION FROM	STATION TO	202 BARRIER RE-LOCATED EACH	603 12" CONDUIT TYPE B LF	603 18" CONDUIT TYPE B LF	604 CATCH BASIN TYPE MASS 7030 EACH	604 CATCH BASIN TYPE MASS V5630 EACH	604 DRAINAGE MANHOLE MASS 1048 EACH
CB-5	LT		19+54				1		
CB-6	RT		19+54				1		
DM-4	LT		17+50						1
DM-5	LT		19+54					1	
DP-9	LT	17+50	19+54		204				
DP-10	LT	19+54	19+54			6			
DP-11	RT/LT	19+54	19+54			30			
DP-12	LT	19+54	22+63.16		309				
R-1	LT	18+66	18+87	2					
TOTALS CARRIED TO GENERAL SUMMARY				2	513	36	2	1	1

VERTICAL IN FEET 5 2.5 0

HORIZONTAL SCALE IN FEET 0 10 20

CHECKED BY: KAD

DATE: MAY, 2014

DRAWN BY: FPW

DATE: MAY, 2014

REVISIONS:

DATE	DESCRIPTION

9th St. SW Improvement Project

9th St. SE Plan and Profile Sta. 17+00 and Sta. 21+50

City of Massillon
Stark County, Ohio

Kathy Catazaro-Perry, Mayor

Massillon City of Champions

DRAWING NAME: SHT9-9thpp3.DWG

CITY NUMBER: 09st01

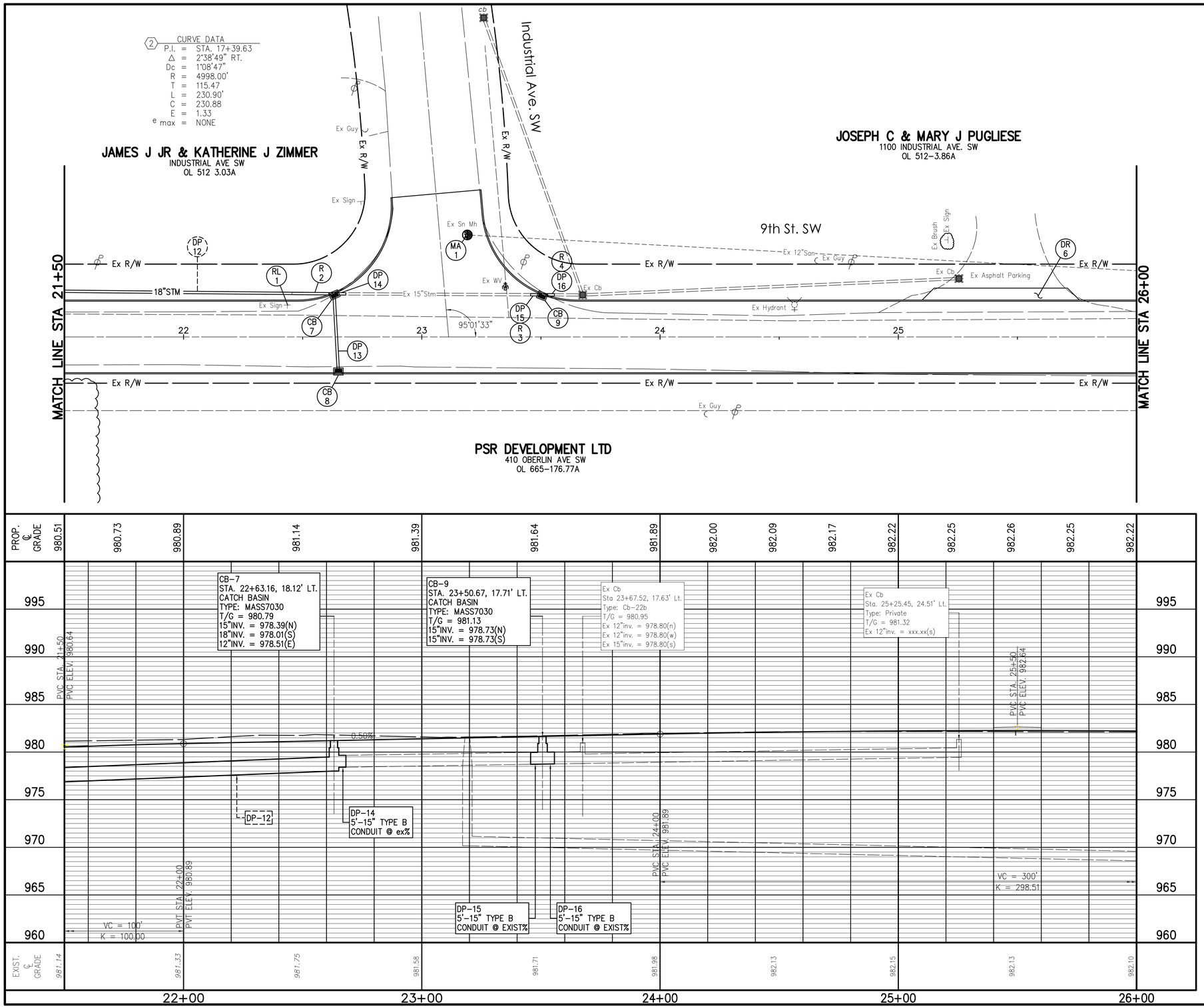

REF. No.	SIDE	STATION FROM	STATION TO	202 PIPE REMOVED	202 SIGN REMOVED AND RELOC.	603 12" TYPE B CONDUIT	603 15" TYPE B CONDUIT	604 CATCH BASIN TYPE MASS 7030	604 SANITARY MANHOLE MASS 1048-AGS-R
				LF	EACH	LF	LF	EACH	EACH
CB-7	LT	XX	XX					1	
CB-8	RT	XX	XX					1	
CB-9	LT	XX	XX					1	
DP-13	RT/LT	XX	XX			33			
DP-14	LT	XX	XX				5		
DP-15	LT	XX	XX				5		
DP-16	LT	XX	XX				5		
MA-1	LT	XX	XX						1
R-2	LT	XX	XX	22					
R-3	LT	XX	XX	5					
R-4	LT	XX	XX	5					
RL-1	LT	XX	XX		1				
TOTALS CARRIED TO GENERAL SUMMARY				32	1	33	15	3	1

VERTICAL IN FEET 0 10 20

HORIZONTAL SCALE IN FEET 0 10 20

CHECKED BY: KAD

DATE: MAY, 2014

DRAWN BY: FPW

DATE: MAY, 2014

REVISIONS:

DATE	DESCRIPTION

9th St. SW Improvement Project

9th St. SE Plan and Profile Sta. 21+50 and Sta. 26+00

City of Massillon
Stark County, Ohio

Kathy Catazaro-Perry, Mayor

Massillon City of Champions

DRAWING NAME: SHT10-9thPP4.DWG

CITY NUMBER: 09st01

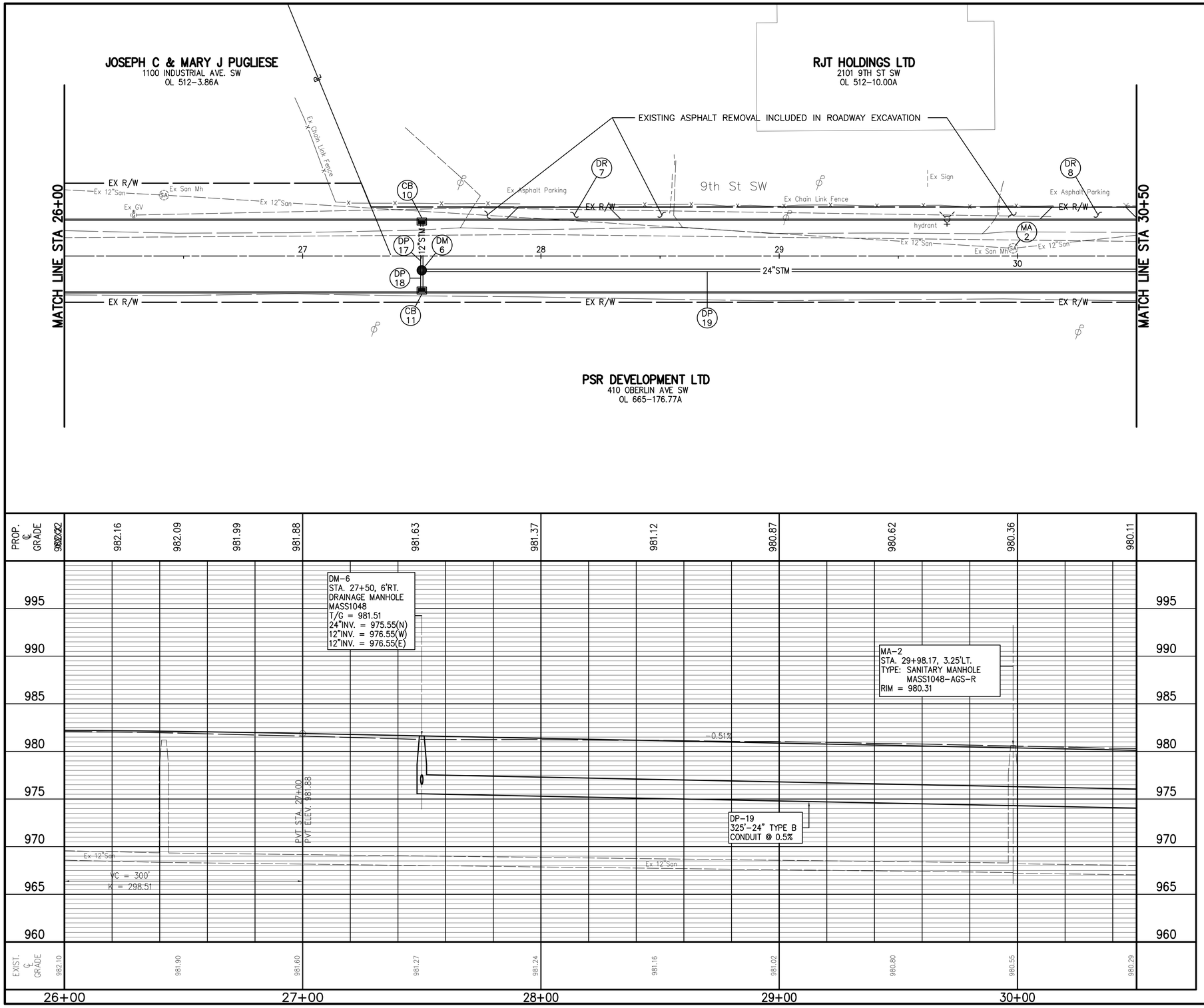

REF. No.	SIDE	STATION FROM	STATION TO	603 12" TYPE B CONDUIT (LF)	603 24" TYPE B CONDUIT (LF)	604 CATCH BASIN TYPE MASS 7030 (EACH)	604 DRAINAGE MANHOLE MASS 1048 (EACH)	604 SANITARY MANHOLE MASS 1048-AGS-R (EACH)
CB-10	LT	27+50				1		
CB-11	RT	27+50				1		
DM-6	RT	27+50					1	
DP-17	RT/LT	27+50	27+50	21				
DP-18	RT	27+50	27+50	9				
DP-19	RT	27+50	30+75		325			
MA-2	LT	29+98.17						1
TOTALS CARRIED TO GENERAL SUMMARY				30	325	2	1	1

VERTICAL IN FEET 0 10 20

HORIZONTAL SCALE IN FEET 0 10 20

CHECKED BY: KAD
DATE: MAY, 2014
DRAWN BY: FPW
DATE: MAY, 2014

REVISIONS:

DATE	DESCRIPTION

9th St. SW Improvement Project

9th St. SE Plan and Profile Sta. 26+00 and Sta. 30+50

City of Massillon
Stark County, Ohio

Kathy Catazaro-Perry, Mayor

Massillon City of Champions

DRAWING NAME: SHT11-9thPP5.DWG
CITY NUMBER: 09ss01

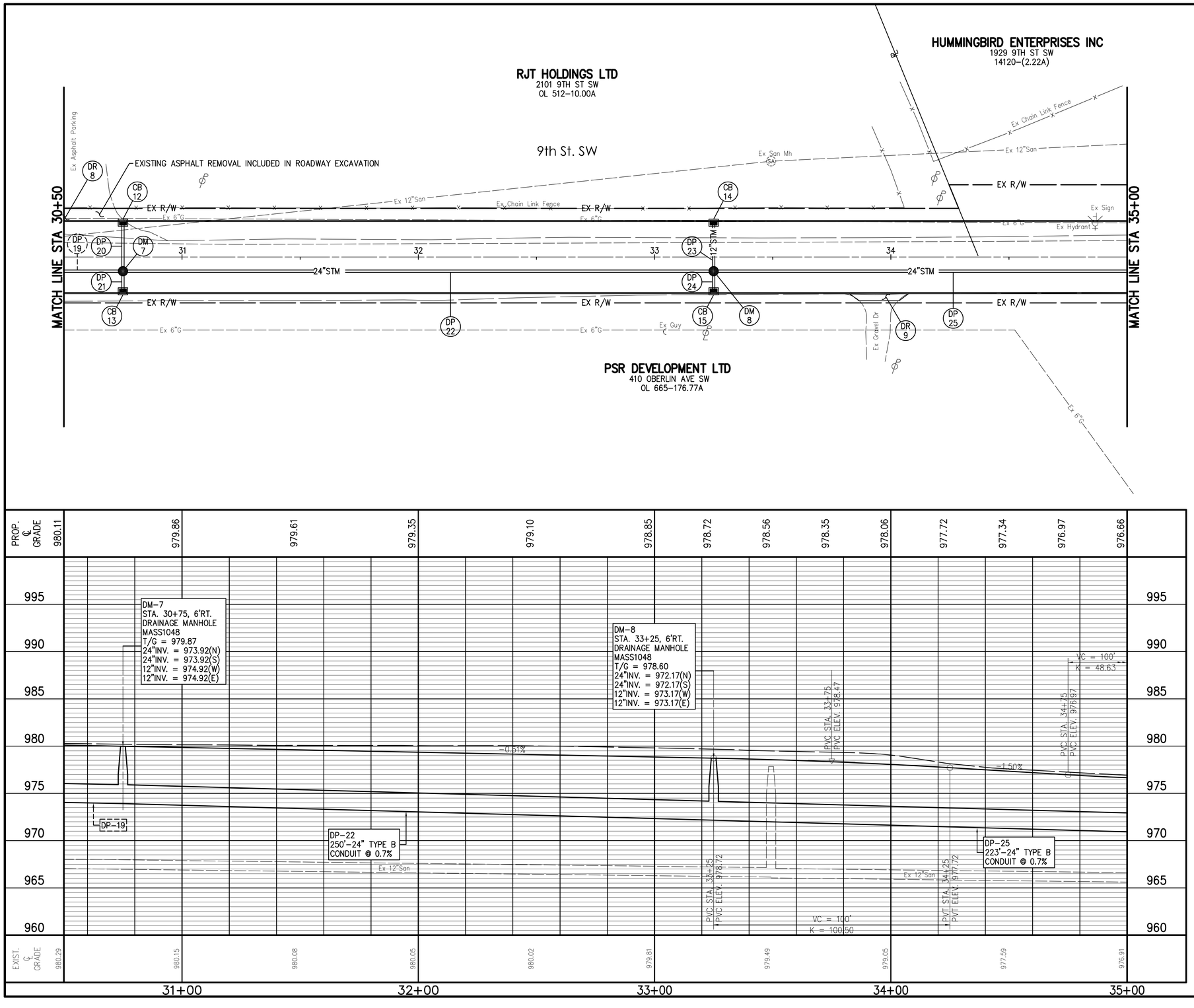

REF. No.	SIDE	STATION FROM	STATION TO	603 12" TYPE B CONDUIT LF	603 24" TYPE B CONDUIT LF	604 CATCH BASIN TYPE MASS 7030 EACH	604 DRAINAGE MANHOLE MASS 1048 EACH
CB-12	LT	30+75				1	
CB-13	RT	30+75				1	
CB-14	LT	33+25				1	
CB-15	RT	33+25				1	
DM-7	RT	30+75					1
DM-8	RT	33+25					1
DP-20	RT/LT	30+75	30+75	21			
DP-21	RT	30+75	30+75	9			
DP-22	RT	30+75	33+25		250		
DP-23	RT/LT	33+25	33+25	21			
DP-24	RT	33+25	33+25	9			
DP-25	RT	33+25	35+48		223		
TOTALS CARRIED TO GENERAL SUMMARY				60	473	4	2

VERTICAL IN FEET 0 10 20

HORIZONTAL SCALE IN FEET 0 10 20

CHECKED BY: KAD

DATE: MAY, 2014

DRAWN BY: FPW

DATE: MAY, 2014

REVISIONS:

DATE	DESCRIPTION

9th St. SW Improvement Project

9th St. SE Plan and Profile Sta. 30+50 and Sta. 35+00

City of Massillon
Stark County, Ohio

Kathy Catazaro-Perry, Mayor

Massillon City of Champions

DRAWING NAME: SHT12-9thPP6.DWG

CITY NUMBER: 09st01

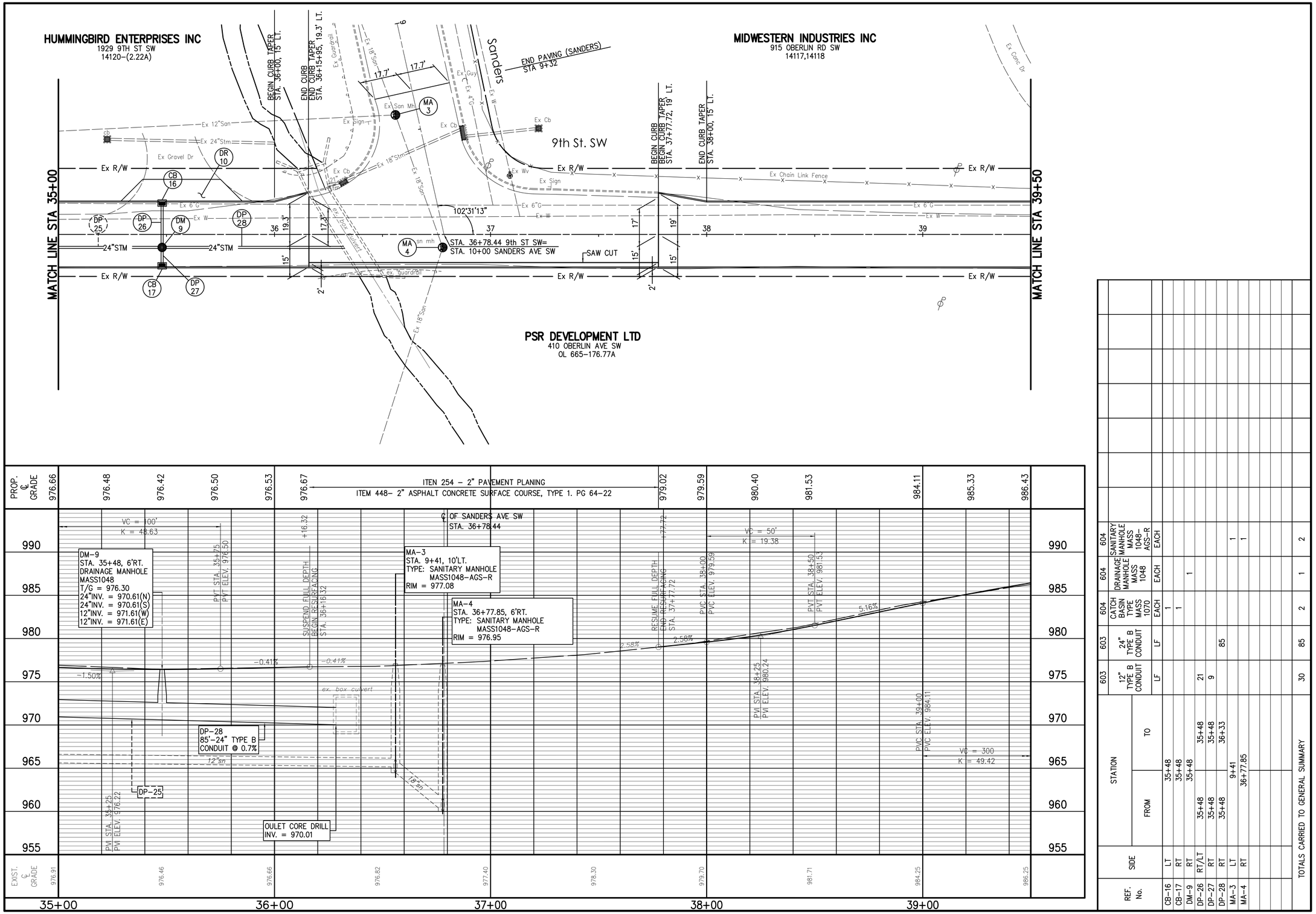

REF. No.	SIDE	STATION FROM	STATION TO	603 12" TYPE B CONDUIT (LF)	603 24" TYPE B CONDUIT (LF)	604 CATCH BASIN TYPE MASS 1070 (EACH)	604 DRAINAGE MANHOLE MASS 1048 (EACH)	604 SANITARY MANHOLE MASS 1048-AGS-R (EACH)
CB-16	LT	35+48		1				
CB-17	RT	35+48		1				
DM-9	RT	35+48					1	
DP-26	RT/LT	35+48	35+48	21				
DP-27	RT	35+48	35+48	9				
DP-28	RT	35+48	36+33		85			
MA-3	LT	9+41						1
MA-4	RT	36+77.85						1
TOTALS CARRIED TO GENERAL SUMMARY				30	85	2	1	2

VERTICAL IN FEET 0 10 20

HORIZONTAL SCALE IN FEET 0 10 20

CHECKED BY: KAD

DATE: MAY, 2014

DRAWN BY: FPW

DATE: MAY, 2014

REVISIONS:

DATE	DESCRIPTION

9th St. SW Improvement Project

9th St. SE Plan and Profile Sta. 21+50 and Sta. 26+00

City of Massillon
Stark County, Ohio

Kathy Catazaro-Perry, Mayor

Massillon City of Champions

DRAWING NAME: SHT13-9thPP7.DWG

CITY NUMBER: 09st01

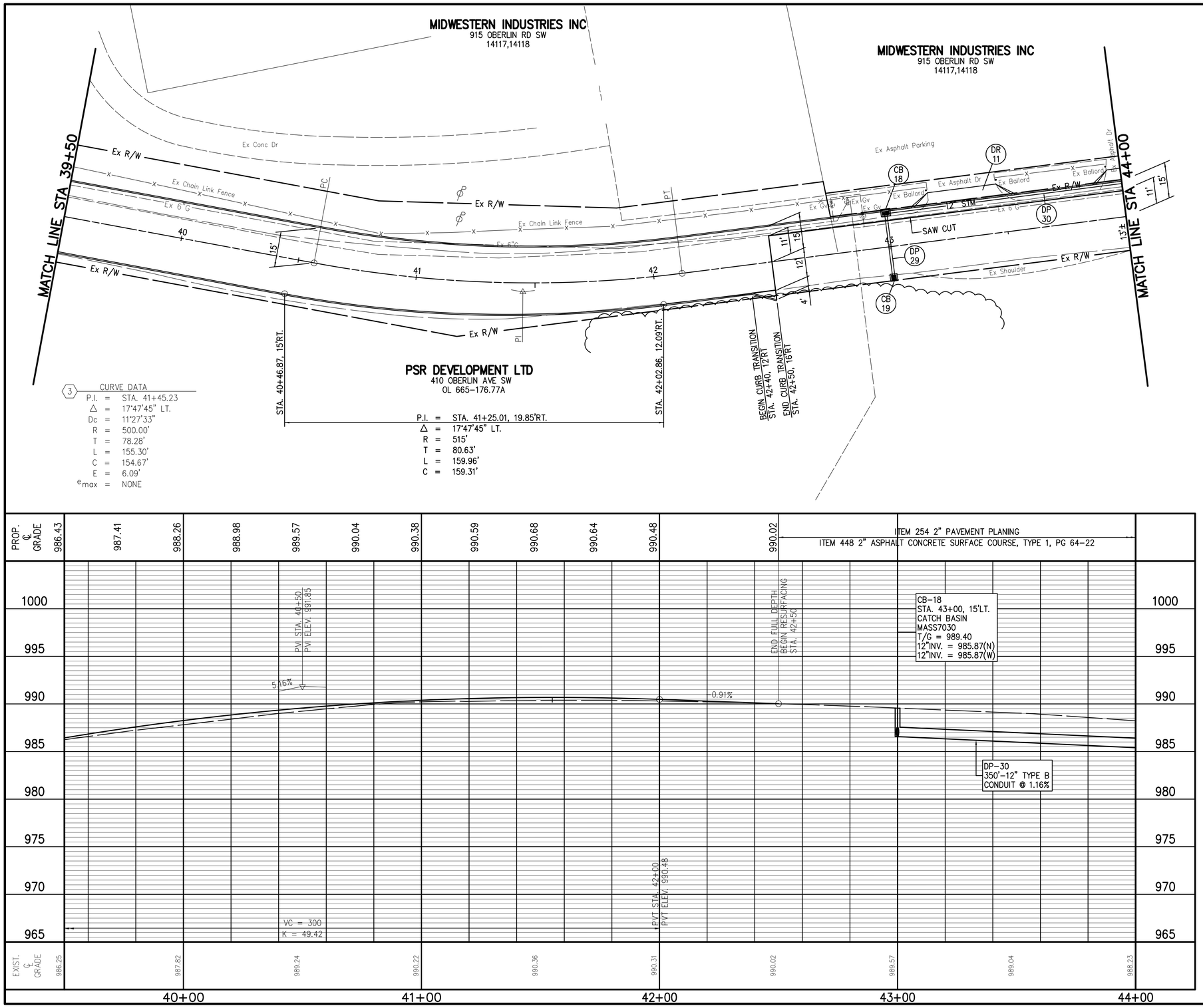

REF. No.	SIDE	STATION FROM	STATION TO	603 12" TYPE B CONDUIT EACH	604 CATCH BASIN TYPE MASS V5622 EACH	604 CATCH BASIN MASS 7030 EACH
CB-18	LT		43+00			1
CB-19	RT		43+00		1	
DP-29	RT/LT	43+00	43+00	28		
DP-30	LT	43+00	46+50	350		
TOTALS CARRIED TO GENERAL SUMMARY				378	1	1

VERTICAL IN FEET 0 10 20

HORIZONTAL SCALE IN FEET 0 10 20

CHECKED BY: KAD

DATE: MAY, 2012

DRAWN BY: FPW

DATE: MAY, 2012

REVISIONS:

DATE	DESCRIPTION

9th St. SW Improvement Project

9th St. SE Plan and Profile Sta. 21+50 and Sta. 26+00

City of Massillon
Stark County, Ohio

Kathy Catazaro-Perry, Mayor

Massillon City of Champions

DRAWING NAME: SHT14-9thpp8.dwg

CITY NUMBER: 09st01

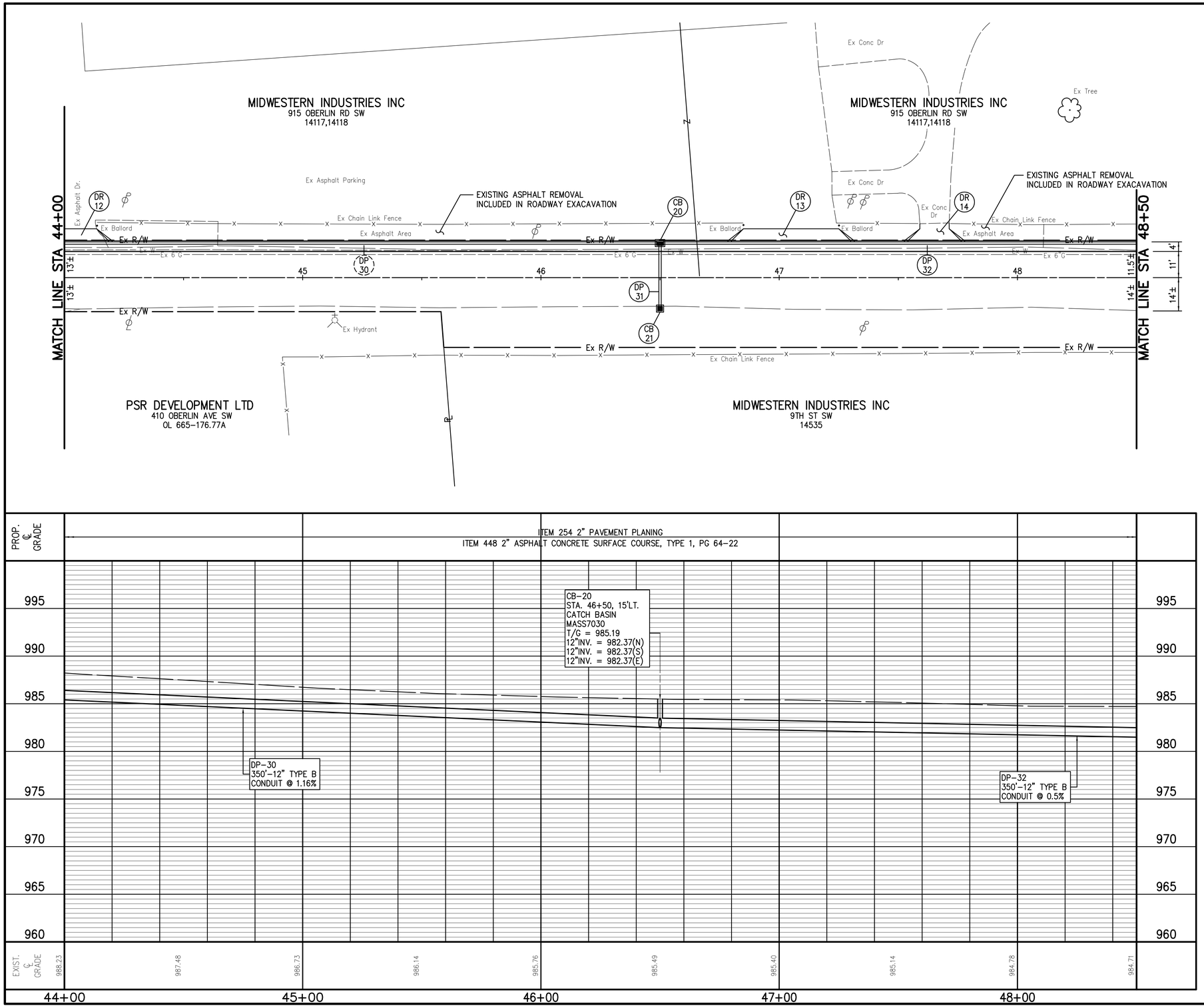

REF. No.	SIDE	STATION FROM	STATION TO	603 12" TYPE B CONDUIT LF	604 CATCH BASIN MASS 7030 EACH	604 CATCH BASIN TYPE MASS V5622 EACH
CB-20	LT	46+50			1	
CB-21	RT	46+50				1
DP-31	RT/LT	46+50	46+50	28		
DP-32	LT	46+50	50+00	350		
TOTALS CARRIED TO GENERAL SUMMARY				378	1	1

VERTICAL IN FEET 0 10 20

HORIZONTAL SCALE IN FEET 0 10 20

CHECKED BY: KAD
DATE: MAY, 2014
DRAWN BY: FPW
DATE: MAY, 2014

REVISIONS:

DATE	DESCRIPTION

9th St. SW Improvement Project

9th St. SE Plan and Profile Sta. 44+00 and Sta. 48+50

City of Massillon
Stark County, Ohio

Kathy Catazaro-Perry, Mayor

Massillon City of Champions

DRAWING NAME: SHT15-9thpp9.DWG
CITY NUMBER: 09st01

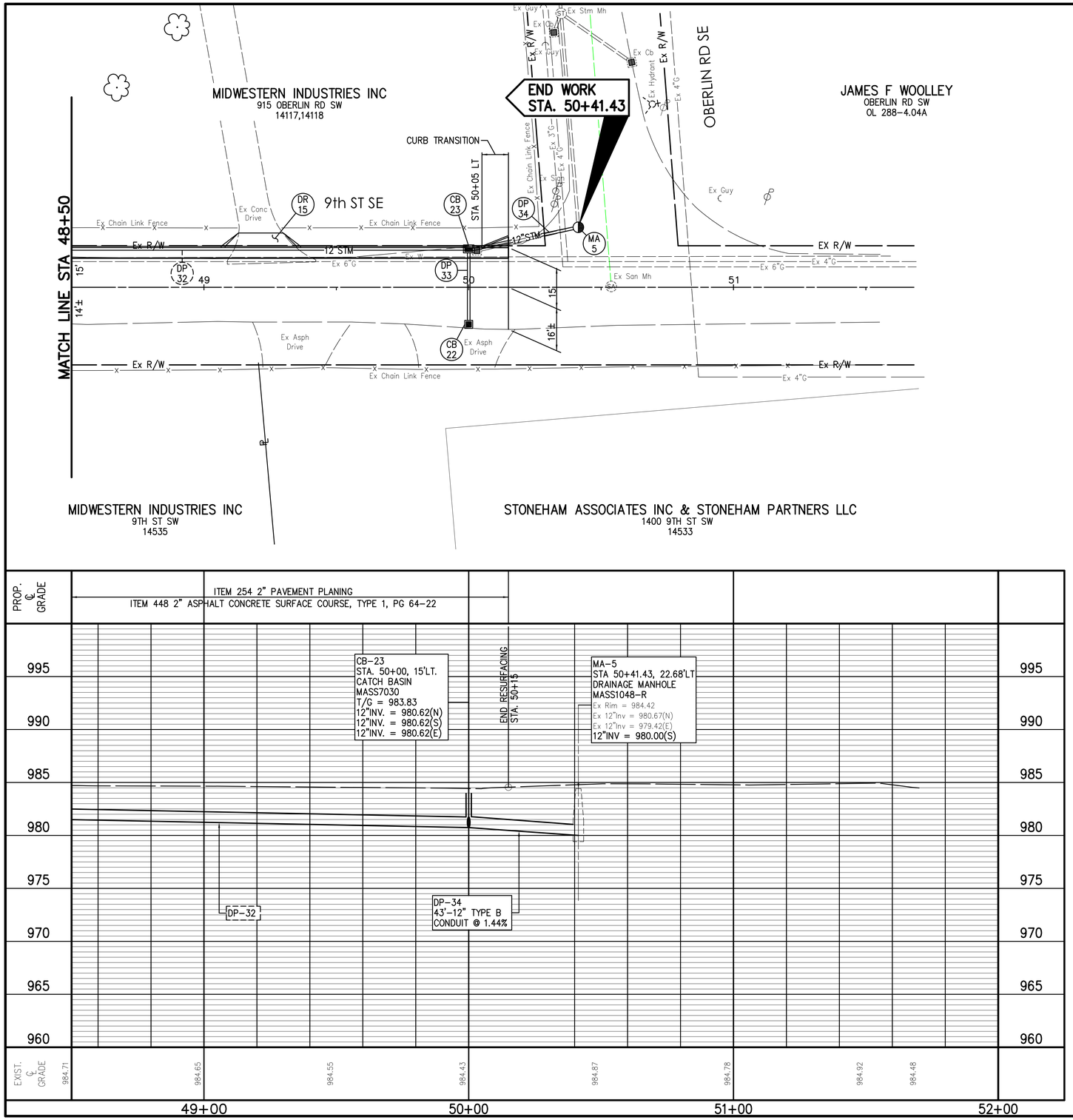

REF. No.	SIDE	STATION FROM	STATION TO	202 PIPE REMOVED	202 CATCH BASIN REMOVED	603 12" TYPE B CONDUIT	604 CATCH BASIN TYPE MASS 7030	604 CATCH BASIN TYPE MASS V5622	604 DRAINAGE MANHOLE MASS 1048 -R
				LF	EACH	LF	EACH	EACH	EACH
CB-22	RT	50+00						1	
CB-23	LT	50+00					1		
DP-33	RT/LT	50+00	50+00			29			
DP-34	LT	50+00	50+41.43			43			
MA-5	LT	50+41.43							1
R-5	RT/LT	50+03			1				
R-6	LT	50+03	50+41.43	40					
TOTALS CARRIED TO GENERAL SUMMARY				40	1	72	1	1	1

REVISIONS:

DATE	DESCRIPTION

VERTICAL IN FEET 0 10 20

HORIZONTAL SCALE IN FEET 0 10 20

CHECKED BY: KAD

DATE: MAY, 2014

DRAWN BY: FPW

DATE: MAY, 2014

9th St. SW Improvement Project

9th St. SE Plan and Profile Sta. 48+50 and Sta. 52+00

City of Massillon
Stark County, Ohio

Kathy Catazaro-Perry, Mayor

Massillon
City of Champions

DRAWING NAME: SHT16-9thpp10

CITY NUMBER: 09st01

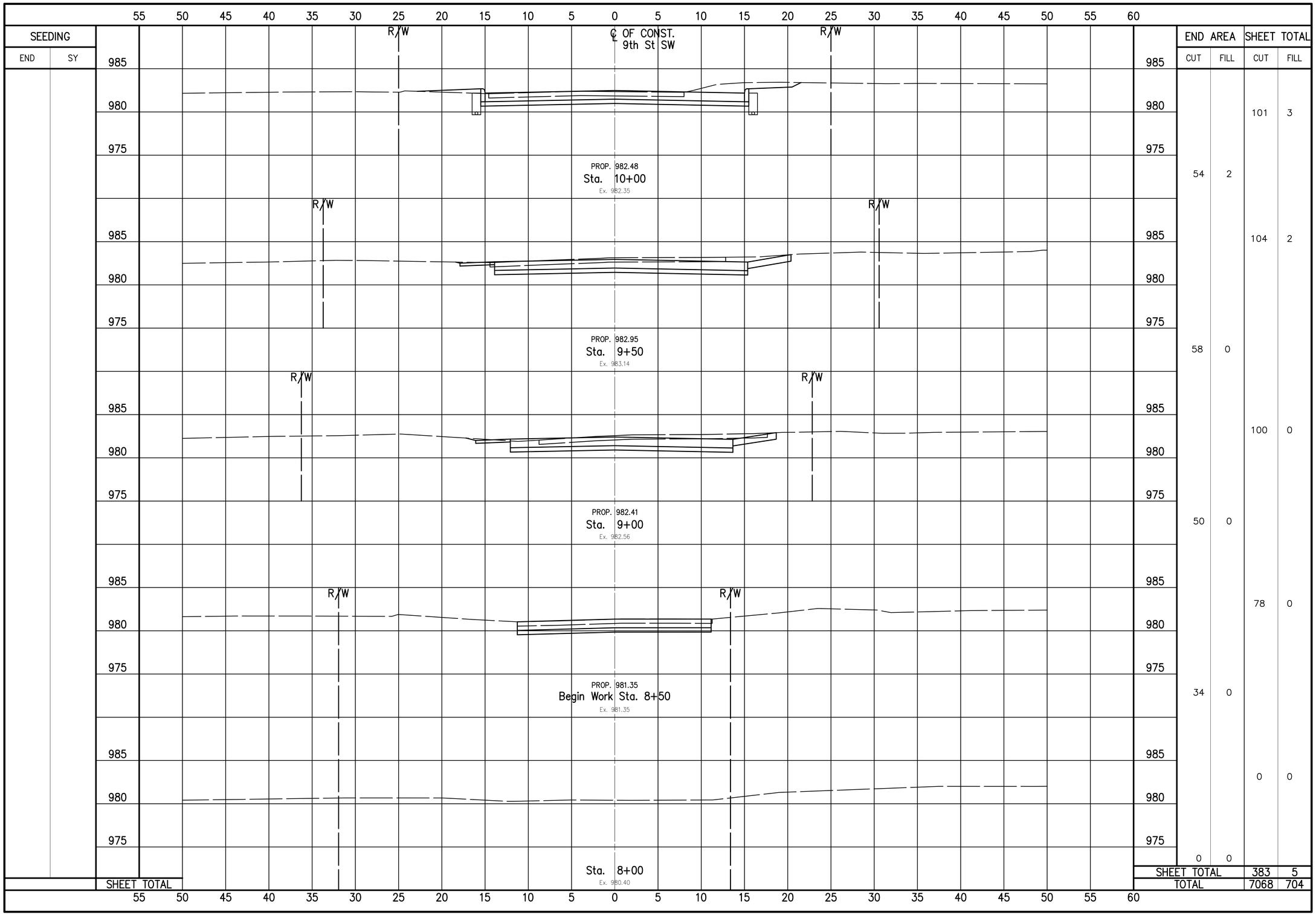

NW NE SW SE N

VERTICAL IN FEET 5 2.5 0

0 2.5 5
HORIZONTAL SCALE IN FEET

CHECKED BY: KAD
DATE: MAY, 2014
DRAWN BY: FPW
DATE: MAY, 2014

REVISIONS:

DATE	DESCRIPTION

9th St. SW Improvement Project
9th St SW Cross Section (Sta. 8+00 to Sta. 10+00)
City of Massillon
Stark County, Ohio

Kathy Catazaro-Perry, Mayor
Massillon
City of Champions

DRAWING NAME: SHT17-9thXS1.dwg
CITY NUMBER: 09st01

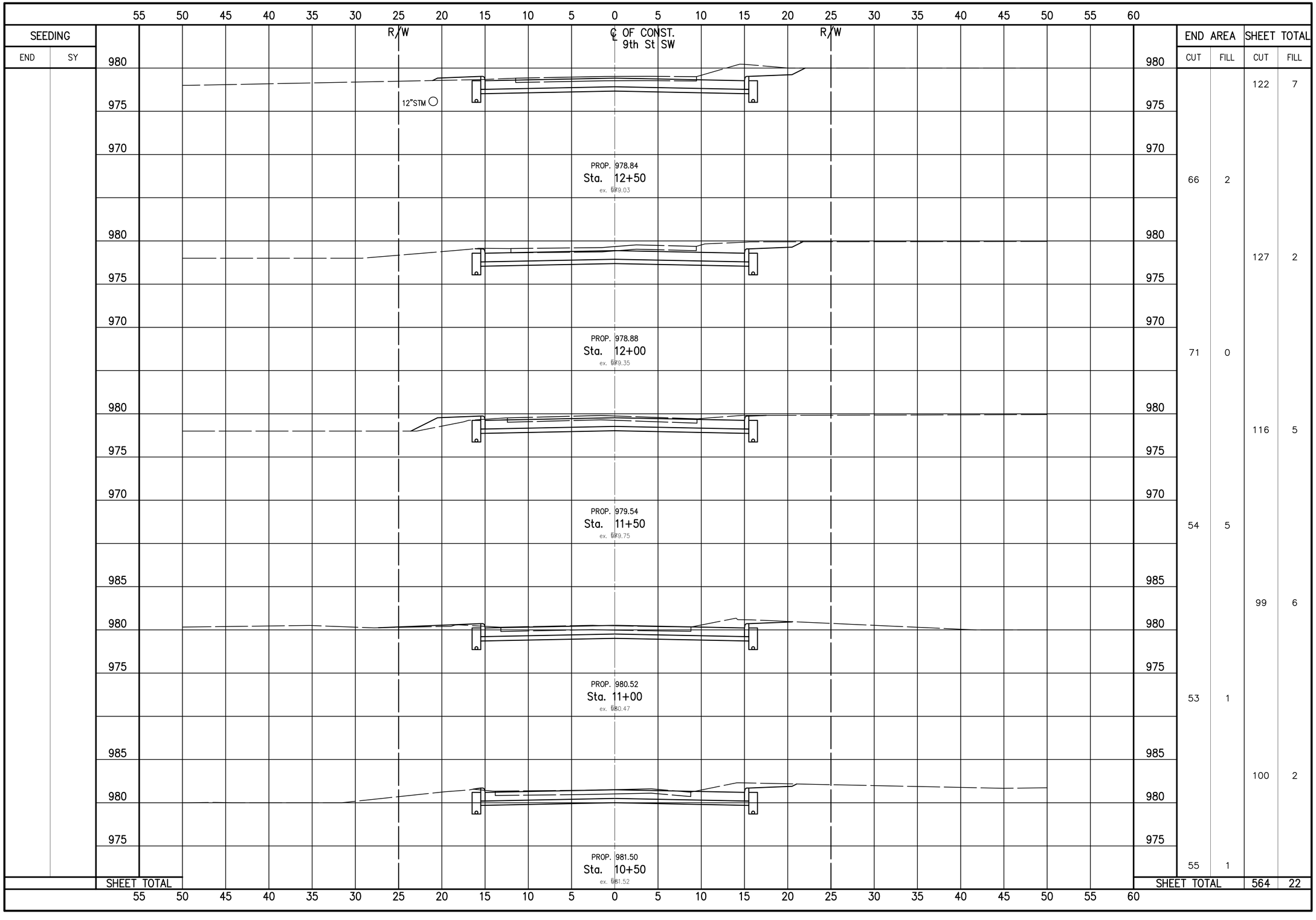

NW NE SW SE

VERTICAL IN FEET 5 2.5 0

0 2.5 5
HORIZONTAL SCALE IN FEET

CHECKED BY: KAD
DATE: Sept, 2012
DRAWN BY: FPW
DATE: Sept, 2012

REVISIONS:

DATE	DESCRIPTION

9th St. SW Improvement Project
9th St SW Cross Section (Sta. 10+50 to Sta. 12+50)
City of Massillon
Stark County, Ohio

Kathy Catazaro-Perry, Mayor
Massillon City of Champions

DRAWING NAME: SHT18-9thXS2.dwg
CITY NUMBER: 09st01

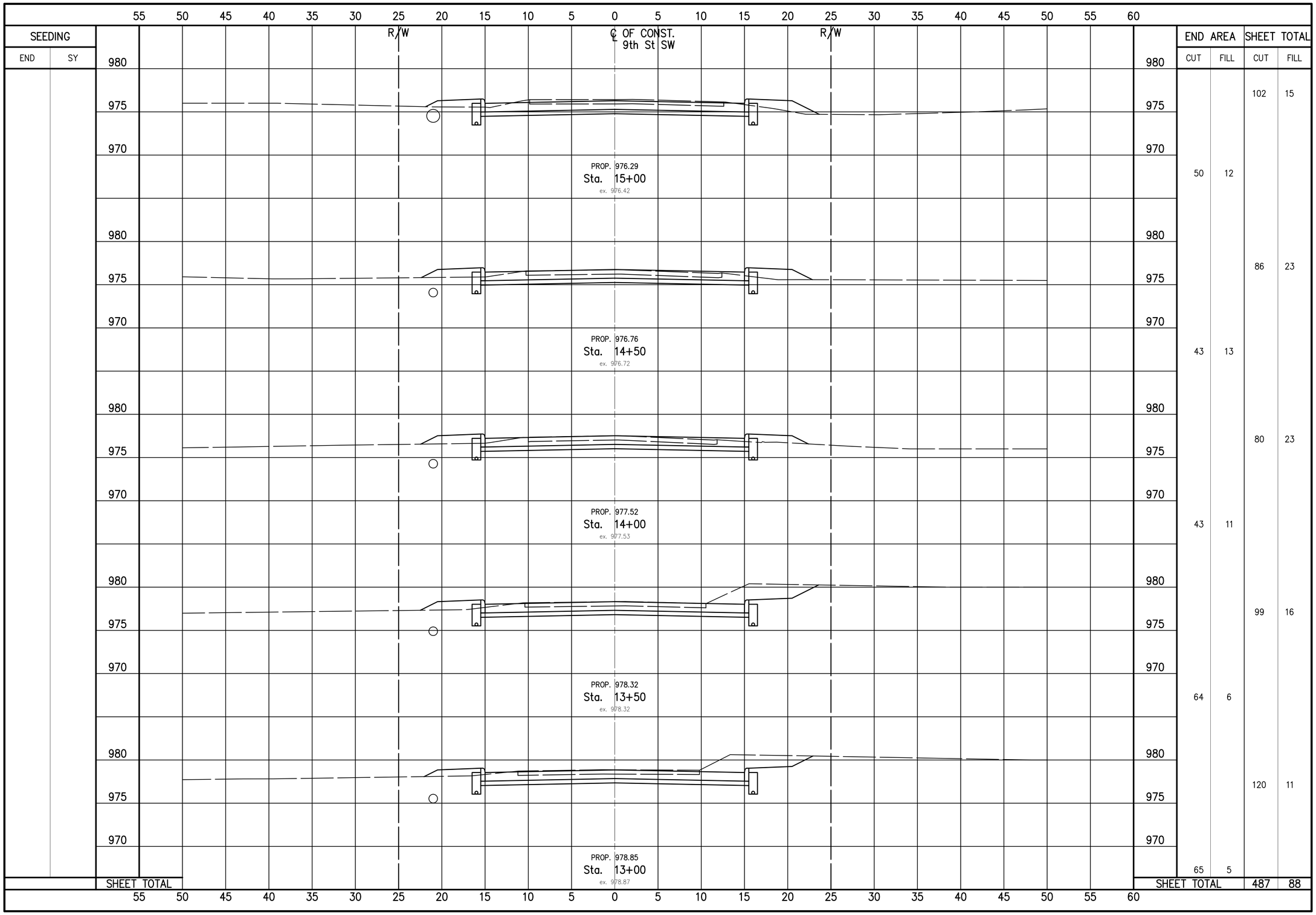

NW NE SW SE N

VERTICAL IN FEET 5 2.5 0

0 2.5 5
HORIZONTAL SCALE IN FEET

CHECKED BY: KAD
DATE: Sept, 2012
DRAWN BY: FPW
DATE: Sept, 2012

REVISIONS:

DATE	DESCRIPTION

9th St. SW Improvement Project
9th St SW Cross Section (Sta. 13+00 to Sta. 15+00)
City of Massillon
Stark County, Ohio

Kathy Catazaro-Perry, Mayor
Massillon
City of Champions

DRAWING NAME: SHT19-9thXS3.dwg
CITY NUMBER: 09st01

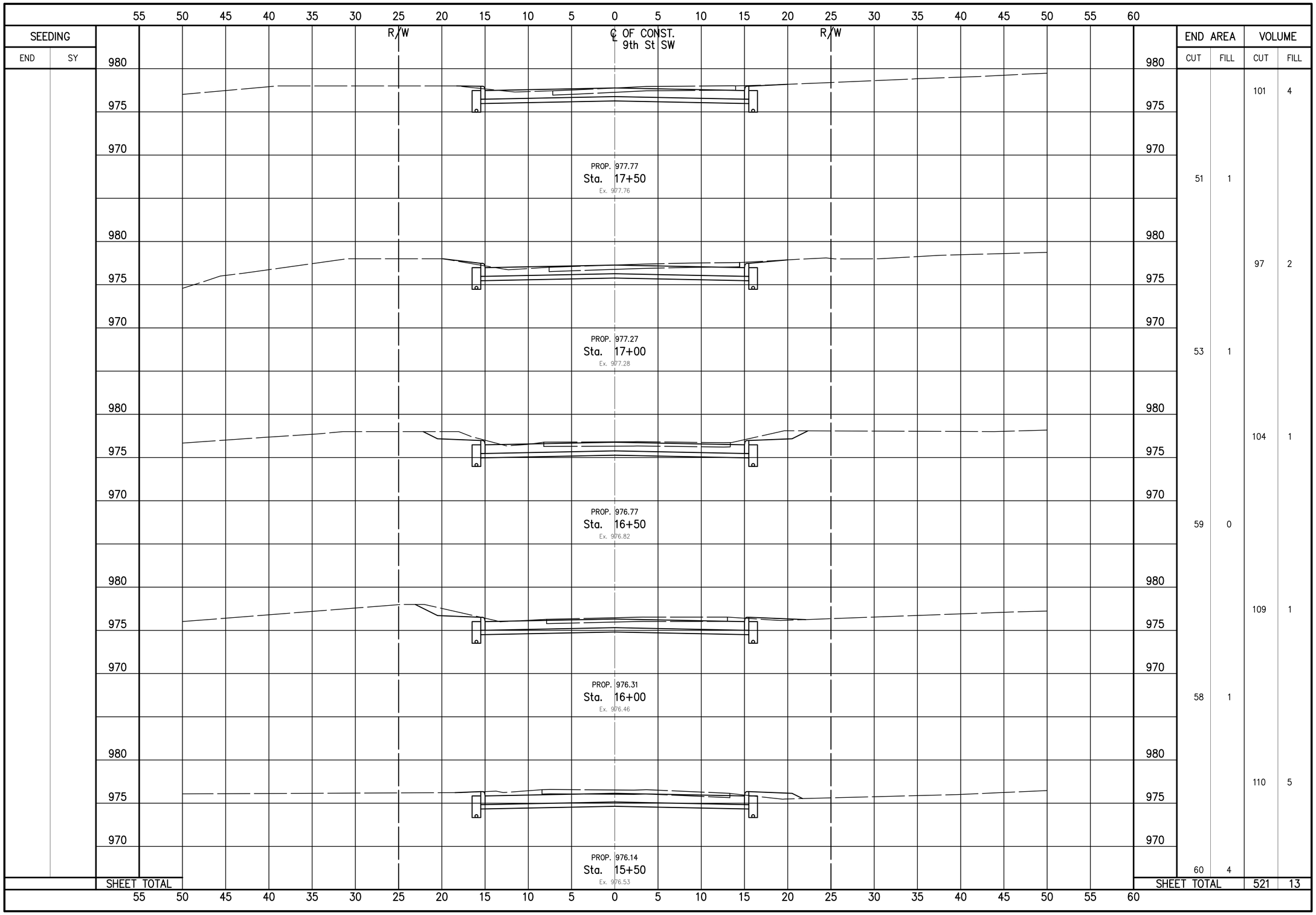

NW NE SW SE N

VERTICAL IN FEET 5 2.5 0

0 2.5 5
HORIZONTAL SCALE IN FEET

CHECKED BY: KAD
DATE: Sept, 2012
DRAWN BY: FPW
DATE: Sept, 2012

REVISIONS:

DATE	DESCRIPTION

9th St. SW Improvement Project

9th St SW Cross Section (Sta. 15+50 to Sta. 17+50)

City of Massillon
Stark County, Ohio

Kathy Catazaro-Perry, Mayor
Massillon
City of Champions

DRAWING NAME: SHT20-9thXS4.dwg
CITY NUMBER: 09st01

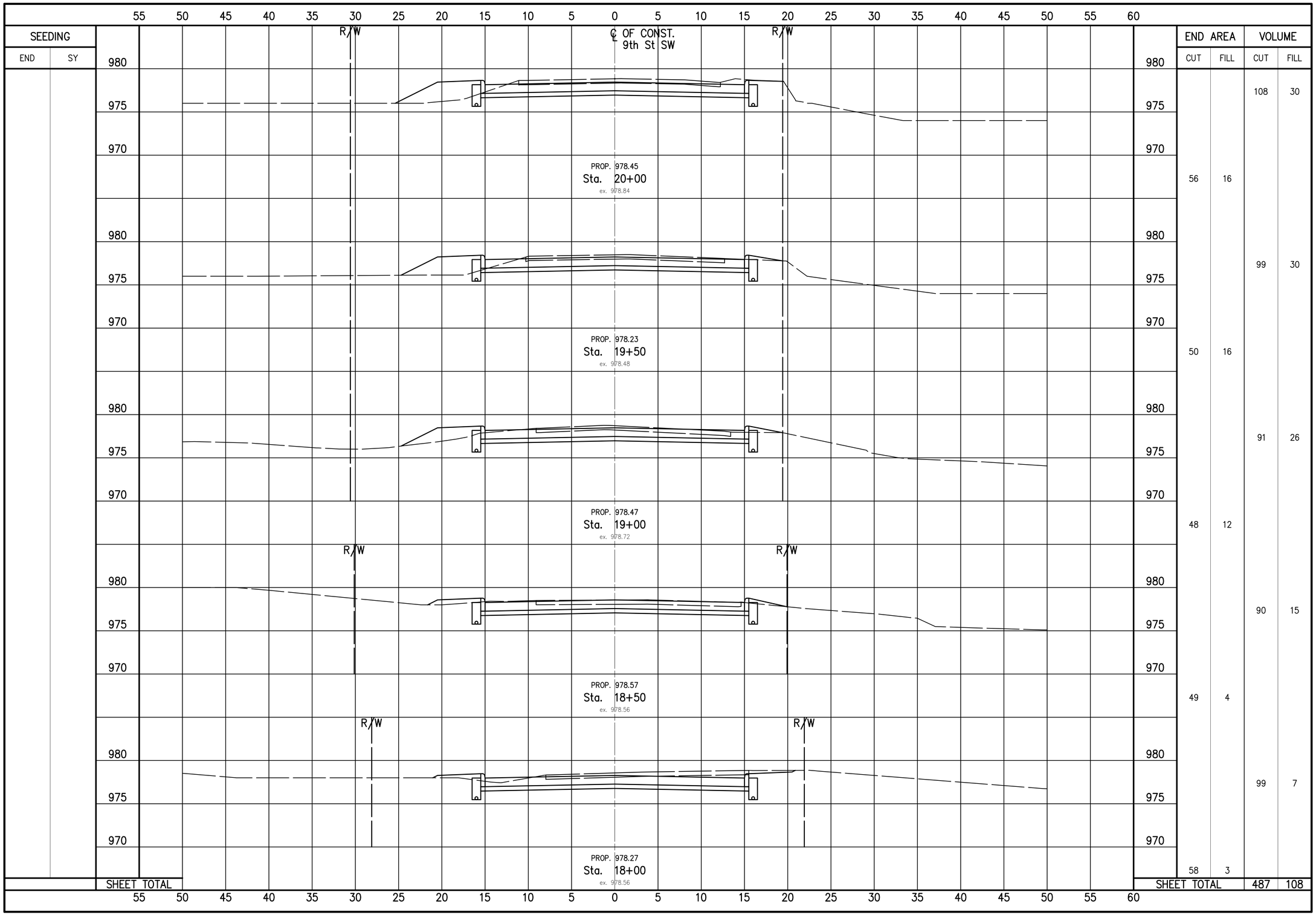
55 50 45 40 35 30 25 20 15 10 5 0 5 10 15 20 25 30 35 40 45 50 55 60
SEEDING
END
SY
R/W
℄ OF CONST.
9th St SW
980
975
970
PROP. 978.45
Sta. 20+00
ex. 978.84
PROP. 978.23
Sta. 19+50
ex. 978.48
PROP. 978.47
Sta. 19+00
ex. 978.72
PROP. 978.57
Sta. 18+50
ex. 978.56
PROP. 978.27
Sta. 18+00
ex. 978.56
END AREA
CUT
FILL
VOLUME
CUT
FILL
108 30
56 16
99 30
50 16
91 26
48 12
90 15
49 4
99 7
58 3
SHEET TOTAL
487 108
NW NE SW SE N
VERTICAL IN FEET
5 2.5 0
0 2.5 5
HORIZONTAL SCALE IN FEET
CHECKED BY: KAD
DATE: Sept, 2012
DRAWN BY: FPW
DATE: Sept, 2012
REVISIONS:
DATE
DESCRIPTION
9th St. SW Improvement Project
9th St SW Cross Section (Sta. 18+00 to Sta. 20+00)
City of Massillon
Stark County, Ohio
Kathy Catazaro-Perry, Mayor
Massillon
City of Champions
DRAWING NAME: SHT21-9thXS5.dwg
CITY NUMBER: 09st01
21 / 43

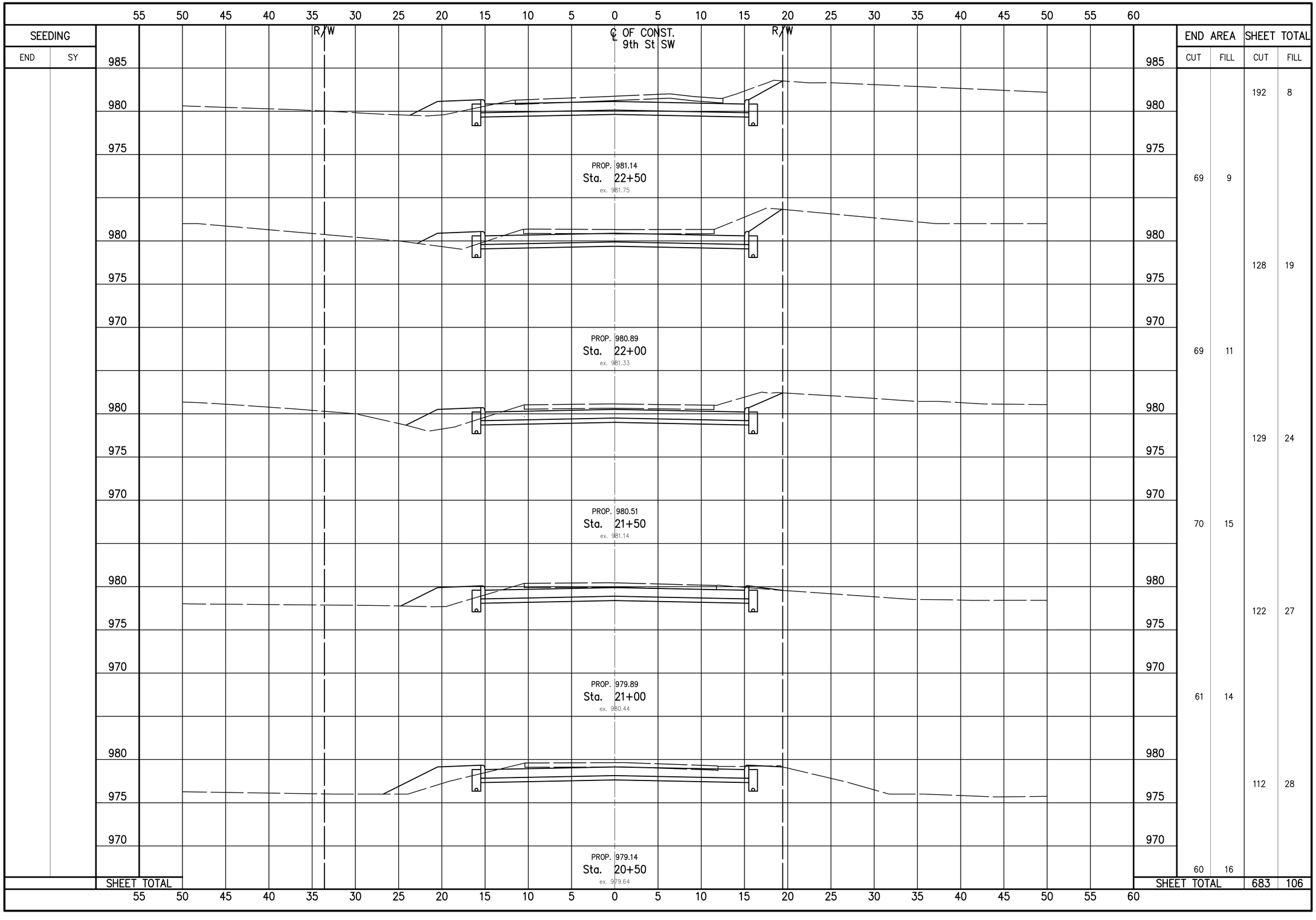

SEEDING END	SEEDING SY	END AREA CUT	END AREA FILL	SHEET TOTAL CUT	SHEET TOTAL FILL
				192	8
		69	9		
				128	19
		69	11		
				129	24
		70	15		
				122	27
		61	14		
				112	28
		60	16		
SHEET TOTAL				683	106

NW NE SW SE N

VERTICAL IN FEET 5 2.5 0

0 2.5 5
HORIZONTAL SCALE IN FEET

CHECKED BY: KAD
DATE: Sept, 2012
DRAWN BY: FPW
DATE: Sept, 2012

REVISIONS:

DATE	DESCRIPTION

9th St. SW Improvement Project
9th St SW Cross Section (Sta. 20+50 to Sta. 22+50)
City of Massillon
Stark County, Ohio

Kathy Catazaro-Perry, Mayor
Massillon City of Champions

DRAWING NAME: SHT22-9thXS6.dwg
CITY NUMBER: 09st01

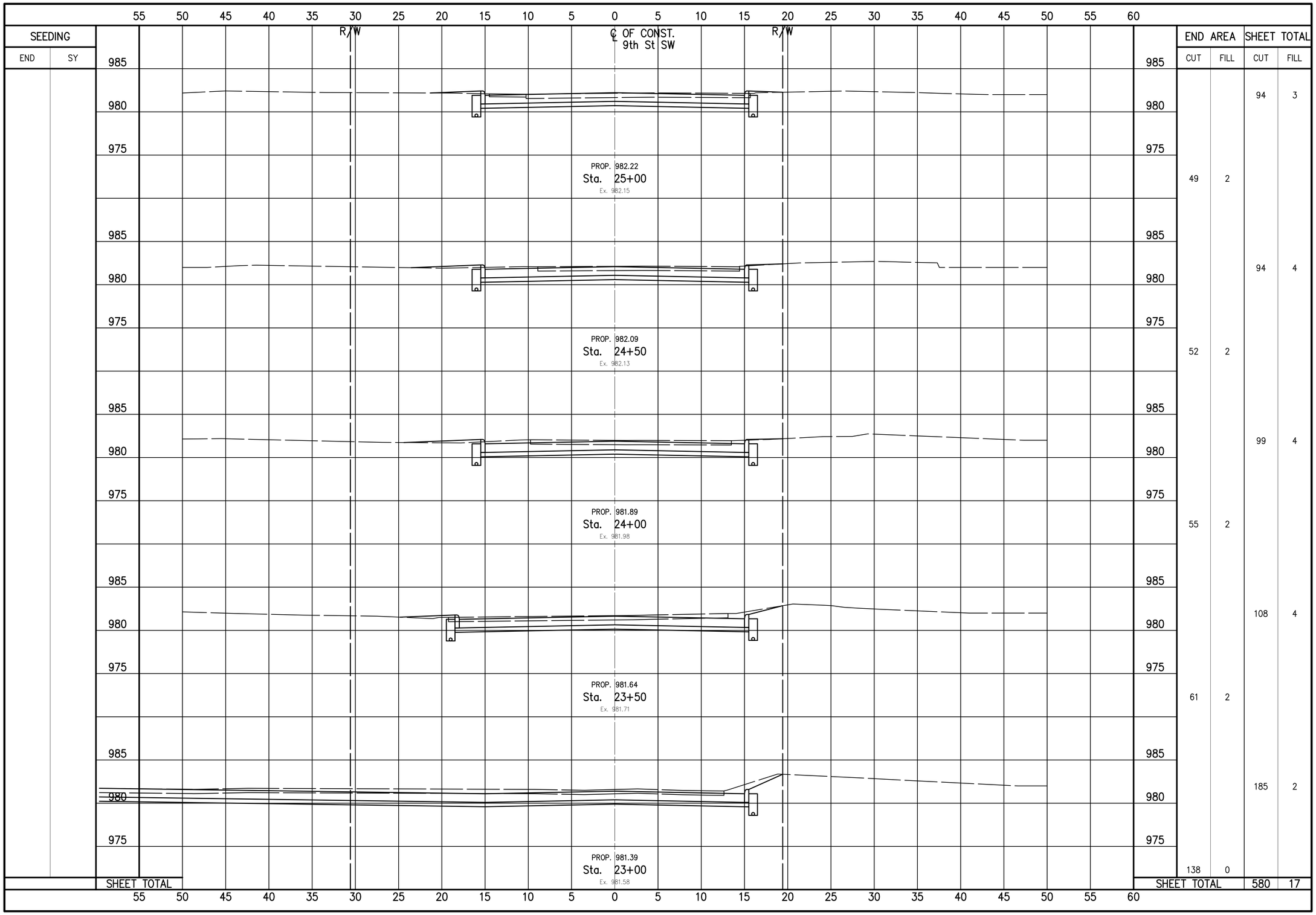

NW NE SW SE N

VERTICAL IN FEET 5 2.5 0

0 2.5 5
HORIZONTAL SCALE IN FEET

CHECKED BY: KAD
DATE: Sept, 2012
DRAWN BY: FPW
DATE: Sept, 2012

REVISIONS:

DATE	DESCRIPTION

9th St. SW Improvement Project
9th St SW Cross Section (Sta. 8+00 to Sta. 10+00)
City of Massillon
Stark County, Ohio

Kathy Catazaro-Perry, Mayor
Massillon
City of Champions

DRAWING NAME: SHT23-9thXS7.dwg
CITY NUMBER: 09st01

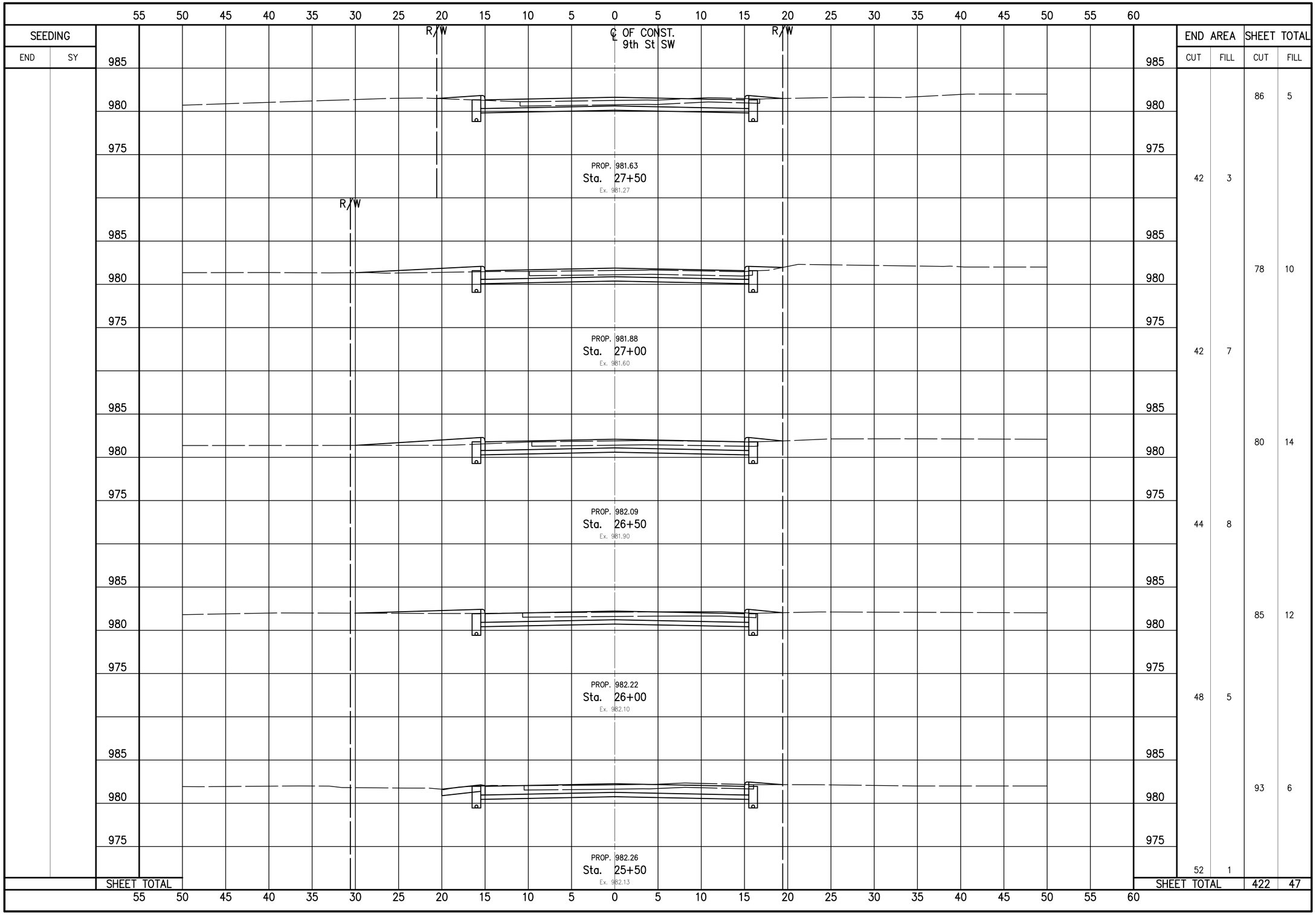

NW NE SW SE N

VERTICAL IN FEET 5 2.5 0

0 2.5 5
HORIZONTAL SCALE IN FEET

CHECKED BY: KAD
DATE: Sept, 2012
DRAWN BY: FPW
DATE: Sept, 2012

REVISIONS:
DATE | DESCRIPTION

9TH St SW Improvement Project
9th St SW Cross Section (Sta. 25+50 to Sta. 27+50)
City of Massillon
Stark County, Ohio

Kathy Catazaro-Perry, Mayor
Massillon City of Champions

DRAWING NAME: SHT24-9thXS8.dwg
CITY NUMBER: 09st01

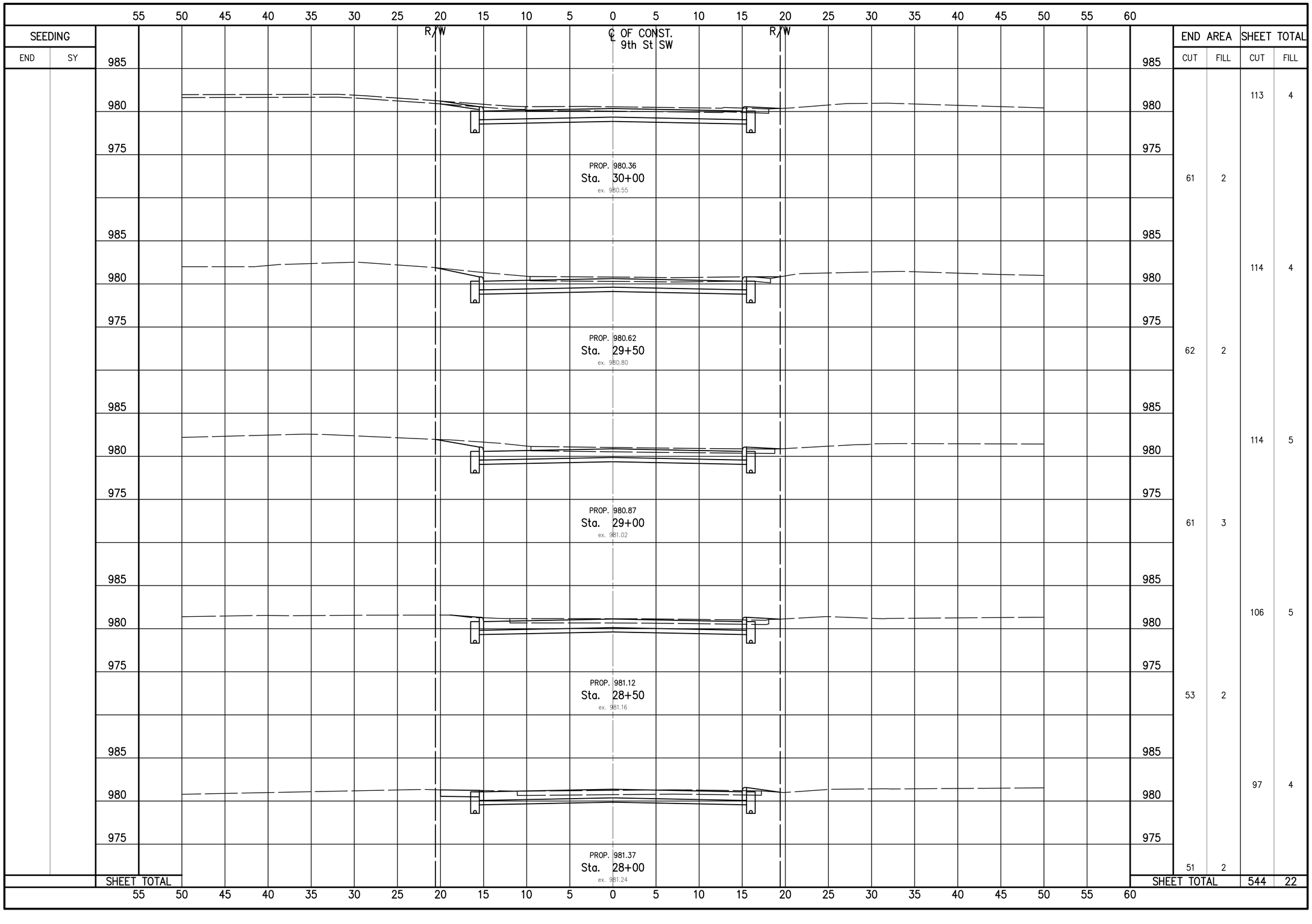

NW NE SW SE

VERTICAL IN FEET 5 2.5 0

0 2.5 5
HORIZONTAL SCALE IN FEET

CHECKED BY: KAD
DATE: Sept, 2012
DRAWN BY: FPW
DATE: Sept, 2012

REVISIONS:

DATE	DESCRIPTION

9TH St SW Improvement Project

9th St SW Cross Section (Sta. 28+00 to Sta. 30+00)

City of Massillon
Stark County, Ohio

Kathy Catazaro-Perry, Mayor
Massillon
City of Opportunity

DRAWING NAME: SHT25-9thXS9.dwg
CITY NUMBER: 09st01

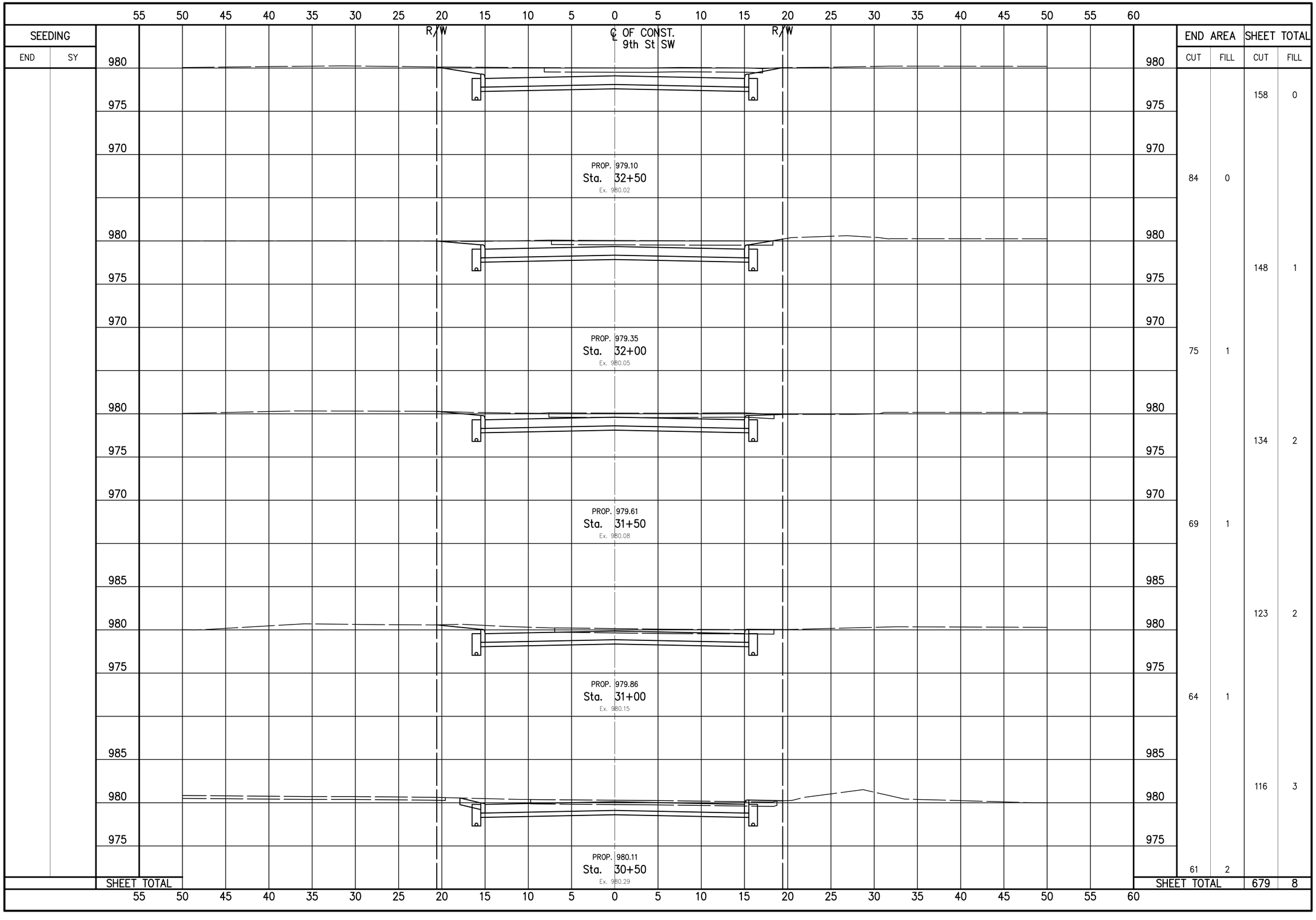

SEEDING END	SEEDING SY	END AREA CUT	END AREA FILL	SHEET TOTAL CUT	SHEET TOTAL FILL
				158	0
		84	0		
				148	1
		75	1		
				134	2
		69	1		
				123	2
		64	1		
				116	3
		61	2		
SHEET TOTAL				679	8

NW NE SW SE N

VERTICAL IN FEET 5 2.5 0

0 2.5 5
HORIZONTAL SCALE IN FEET

CHECKED BY: KAD
DATE: Sept, 2012
DRAWN BY: FPW
DATE: Sept, 2012

REVISIONS:

DATE	DESCRIPTION

9TH St SW Improvement Project

9th St SW Cross Section (Sta. 30+50 to Sta. 32+50)

City of Massillon
Stark County, Ohio

Kathy Catazaro-Perry, Mayor
Massillon City of Champions

DRAWING NAME: SHT26-9thXS10.dwg
CITY NUMBER: 09st01

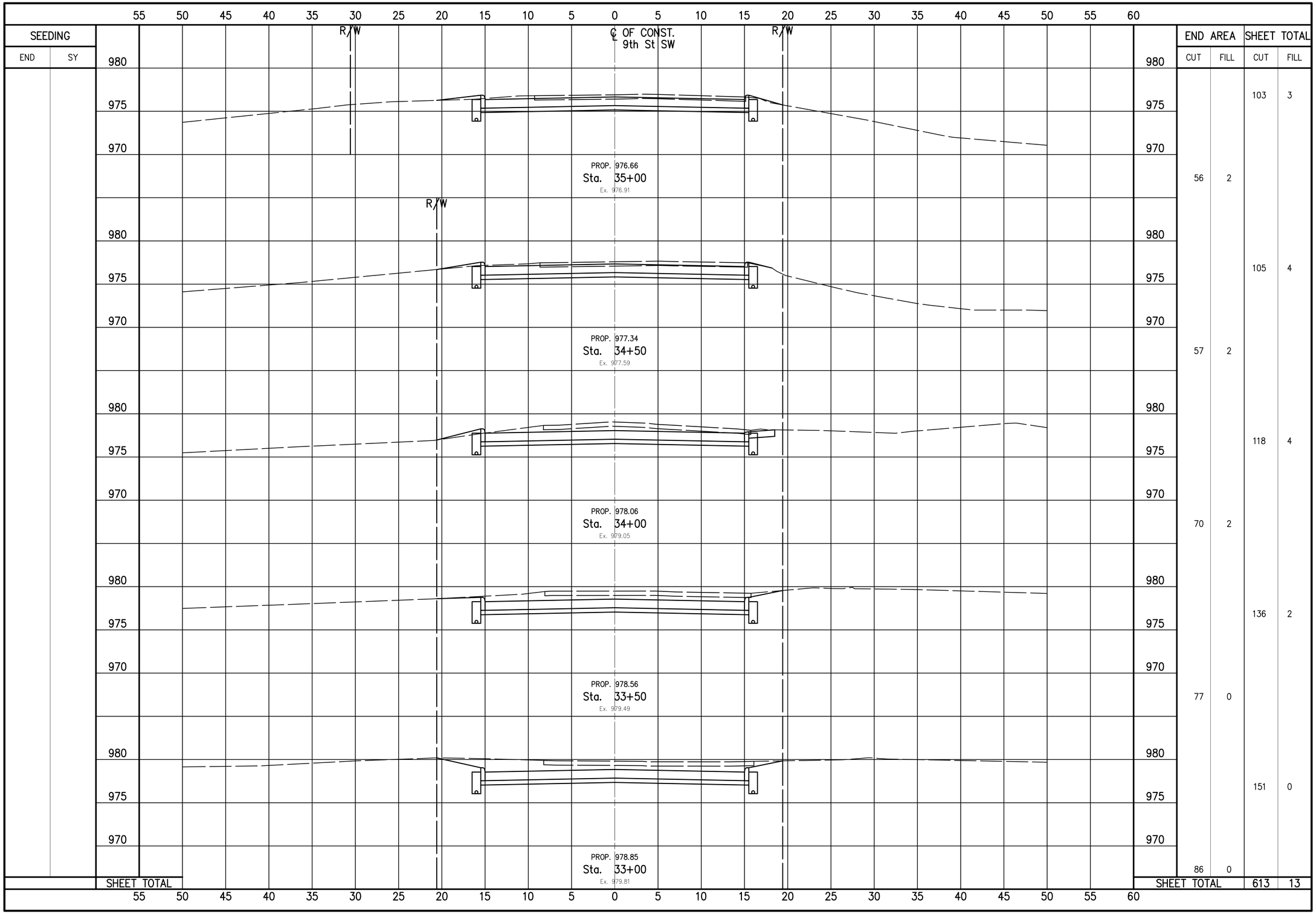

NW NE SW SE N

VERTICAL IN FEET 5 2.5 0

0 2.5 5
HORIZONTAL SCALE IN FEET

CHECKED BY: KAD
DATE: Sept, 2012
DRAWN BY: FPW
DATE: Sept, 2012

REVISIONS:

DATE	DESCRIPTION

9TH St SW Improvement Project
9th St SW Cross Section (Sta. 33+00 to Sta. 35+00)
City of Massillon
Stark County, Ohio

Kathy Catazaro-Perry, Mayor
Massillon City of Champions

DRAWING NAME: SHT27-9thXS11.dwg
CITY NUMBER: 09st01

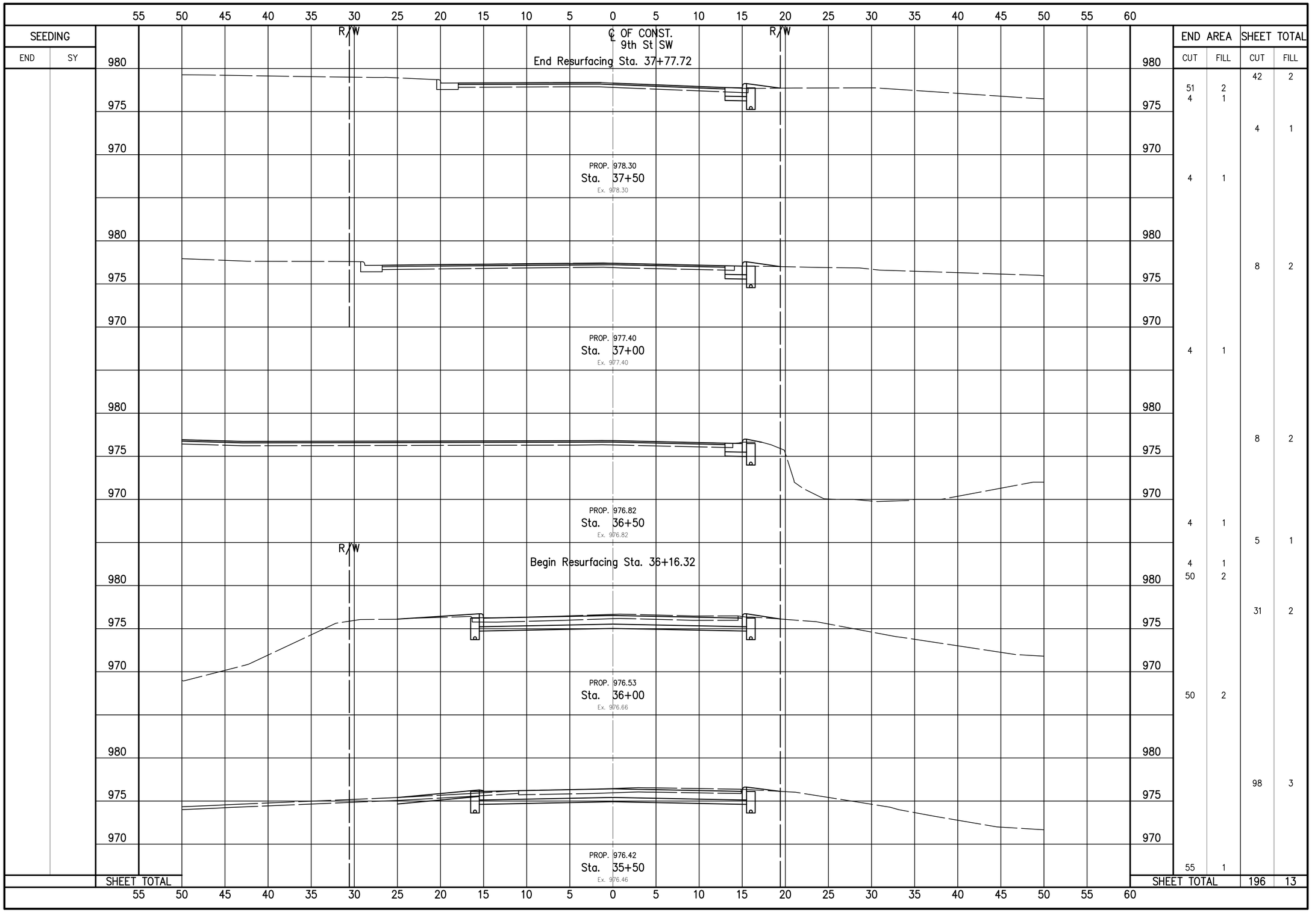

END AREA CUT	END AREA FILL	SHEET TOTAL CUT	SHEET TOTAL FILL
51	2	42	2
4	1		
		4	1
4	1		
		8	2
4	1		
		8	2
4	1		
		5	1
4	1		
50	2		
		31	2
50	2		
		98	3
55	1		
SHEET TOTAL		196	13

NW NE SW SE N

VERTICAL IN FEET 5 2.5 0

0 2.5 5
HORIZONTAL SCALE IN FEET

CHECKED BY: KAD
DATE: Sept, 2012
DRAWN BY: FPW
DATE: Sept, 2012

REVISIONS:

DATE	DESCRIPTION

9TH St SW Improvement Project
9th St SW Cross Section (Sta. 35+50 to Sta. 37+50)
City of Massillon
Stark County, Ohio

Kathy Catazaro-Perry, Mayor
Massillon
City of Champions

DRAWING NAME: SHT28-9thXS12.dwg
CITY NUMBER: 09st01

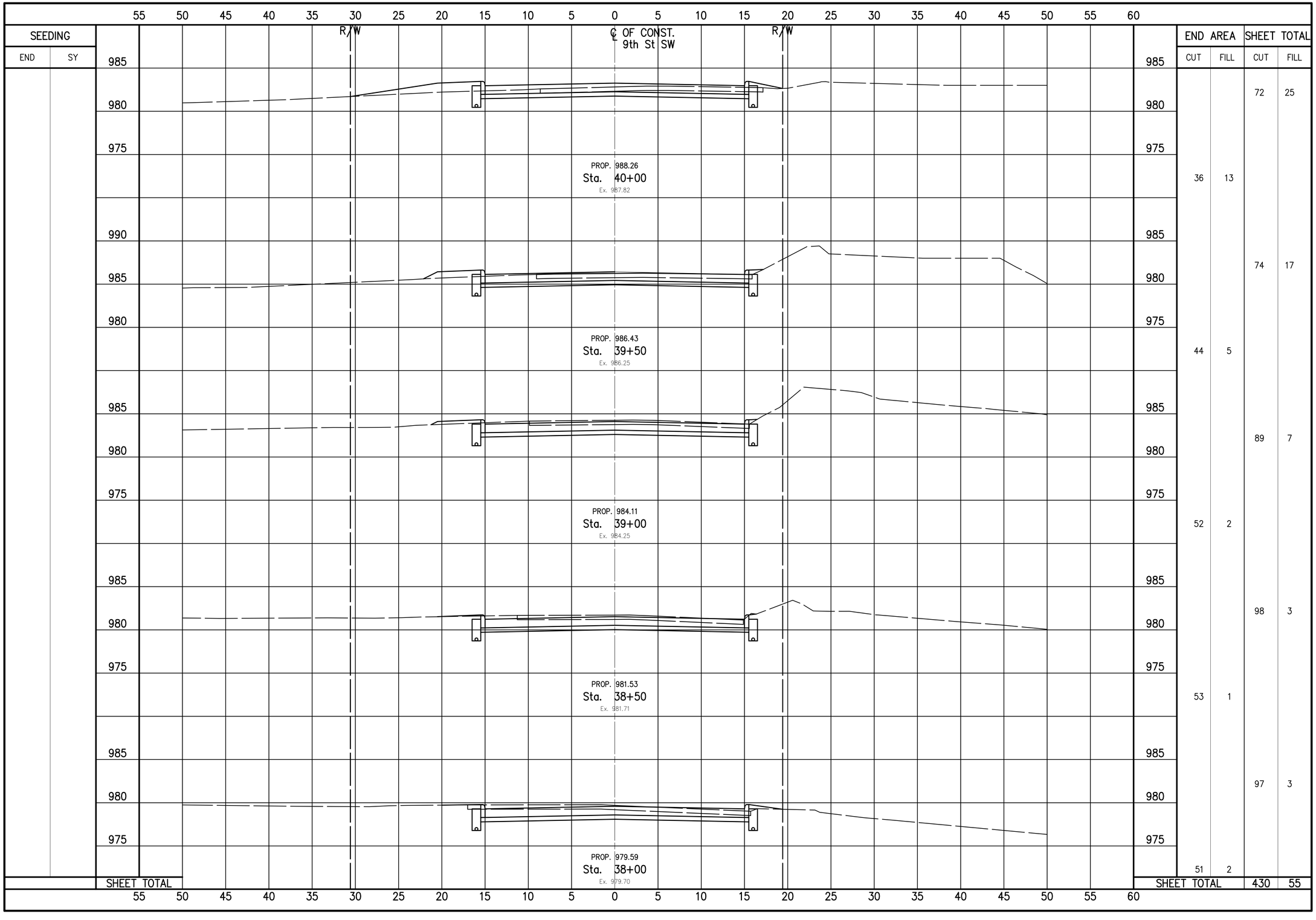
55 50 45 40 35 30 25 20 15 10 5 0 5 10 15 20 25 30 35 40 45 50 55 60
SEEDING
END
SY
R/W
℄ OF CONST.
9th St SW
R/W
985
980
975
PROP. 988.26
Sta. 40+00
Ex. 987.82
990
985
980
975
PROP. 986.43
Sta. 39+50
Ex. 986.25
985
980
975
PROP. 984.11
Sta. 39+00
Ex. 984.25
985
980
975
PROP. 981.53
Sta. 38+50
Ex. 981.71
985
980
975
PROP. 979.59
Sta. 38+00
Ex. 979.70
SHEET TOTAL
END AREA
CUT
FILL
36 13
44 5
52 2
53 1
51 2
SHEET TOTAL
CUT
FILL
72 25
74 17
89 7
98 3
97 3
430 55
NW
NE
SW
SE
N
VERTICAL IN FEET
5
2.5
0
HORIZONTAL SCALE IN FEET
CHECKED BY:
KAD
DATE:
Sept, 2012
DRAWN BY:
FPW
DATE:
Sept, 2012
REVISIONS:
DATE
DESCRIPTION
9TH St SW Improvement Project
9th St SW Cross Section (Sta. 38+00 to Sta. 40+00)
City of Massillon
Stark County, Ohio
Kathy Catazaro-Perry, Mayor
Massillon
City of Champions
DRAWING NAME:
SHT29-9thXS13.dwg
CITY NUMBER:
09st01
29 / 43

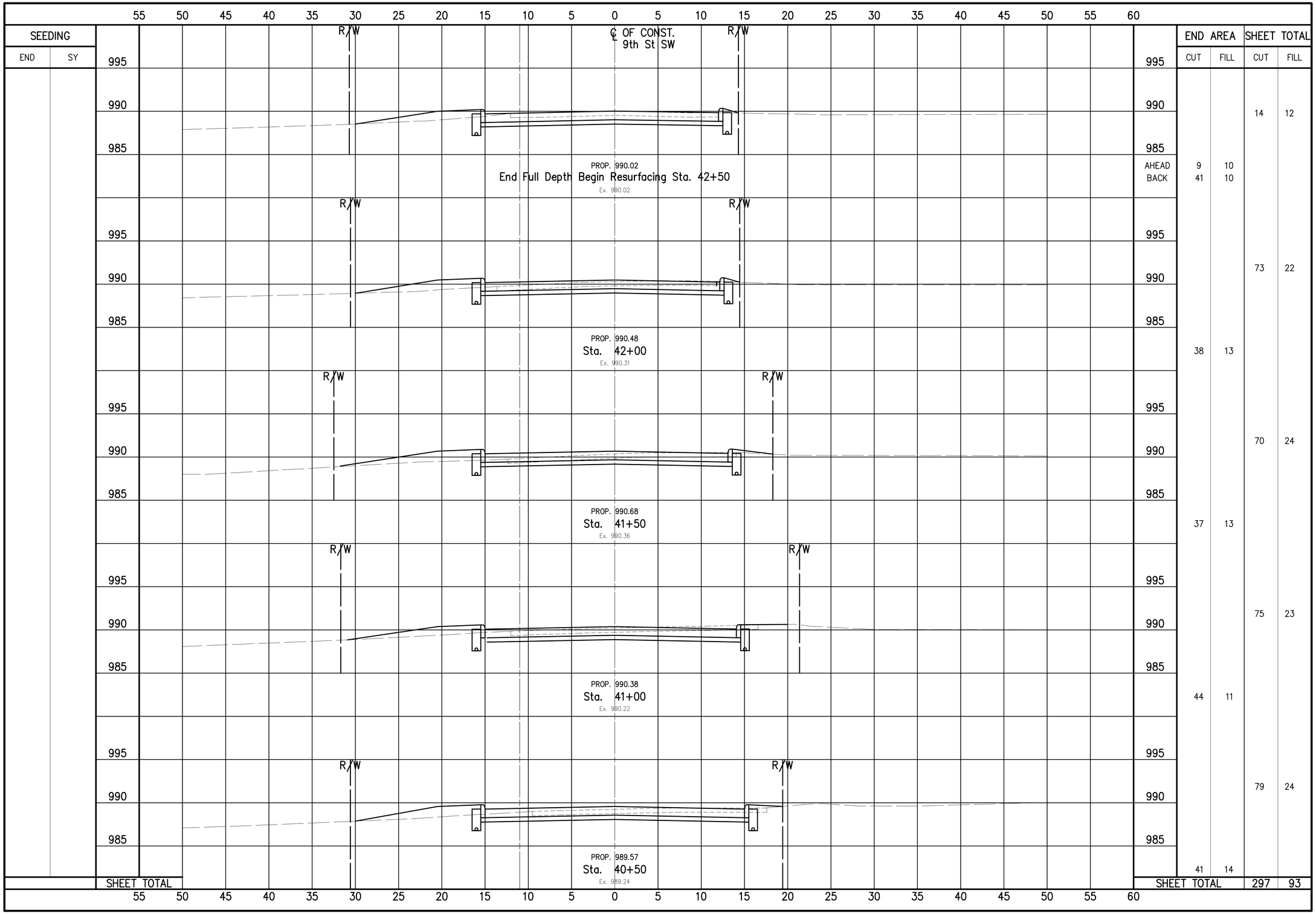
55 50 45 40 35 30 25 20 15 10 5 0 5 10 15 20 25 30 35 40 45 50 55 60
SEEDING
END
SY
R/W
℄ OF CONST.
9th St SW
995
990
985
PROP. 990.02
End Full Depth Begin Resurfacing Sta. 42+50
Ex. 990.02
PROP. 990.48
Sta. 42+00
Ex. 990.31
PROP. 990.68
Sta. 41+50
Ex. 990.36
PROP. 990.38
Sta. 41+00
Ex. 990.22
PROP. 989.57
Sta. 40+50
Ex. 989.24
SHEET TOTAL
END AREA
CUT
FILL
SHEET TOTAL
CUT
FILL
AHEAD 9 10
BACK 41 10
38 13
37 13
44 11
41 14
14 12
73 22
70 24
75 23
79 24
297 93
NW NE SW SE
VERTICAL IN FEET
0 2.5 5
HORIZONTAL SCALE IN FEET
CHECKED BY: KAD
DATE: Sept, 2012
DRAWN BY: FPW
DATE: Sept, 2012
REVISIONS:
DATE
DESCRIPTION
9TH St SW Improvement Project
9th St SW Cross Section (Sta. 40+50 to Sta. 42+50)
City of Massillon
Stark County, Ohio
Kathy Catazaro-Perry, Mayor
Massillon
City of Champions
DRAWING NAME: SHT30-9th14.dwg
CITY NUMBER: 09st01
30 / 43

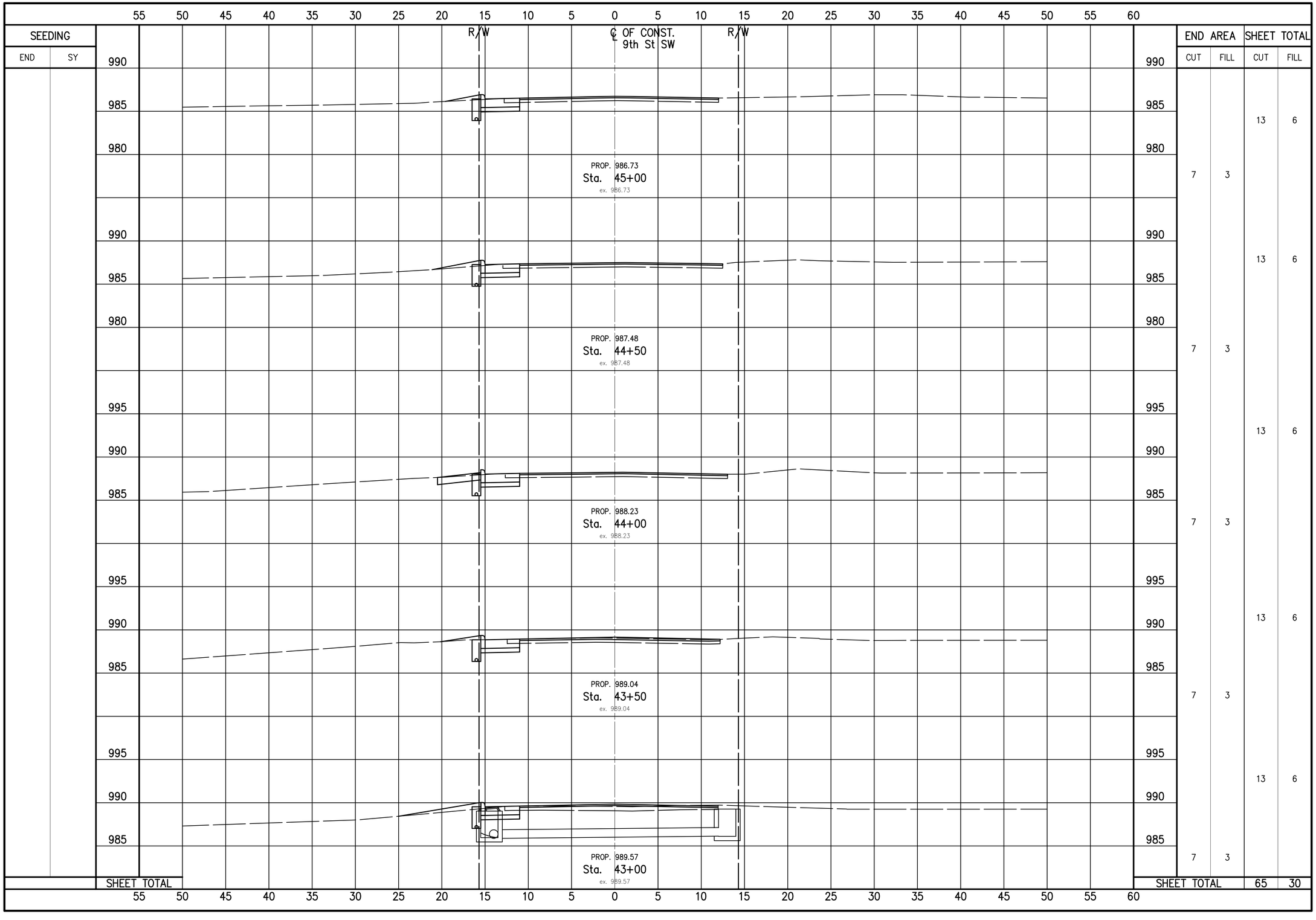

NW NE SW SE N

VERTICAL IN FEET 5 2.5 0

0 2.5 5
HORIZONTAL SCALE IN FEET

CHECKED BY: KAD
DATE: Sept, 2012
DRAWN BY: FPW
DATE: Sept, 2012

REVISIONS:

DATE	DESCRIPTION

9TH St SW Improvement Project
9th St SW Cross Section (Sta. 43+00 to Sta. 45+00)
City of Massillon
Stark County, Ohio

Kathy Catazaro-Perry, Mayor
Massillon City of Champions

DRAWING NAME: SHT31-9thXS15.dwg
CITY NUMBER: 09st01

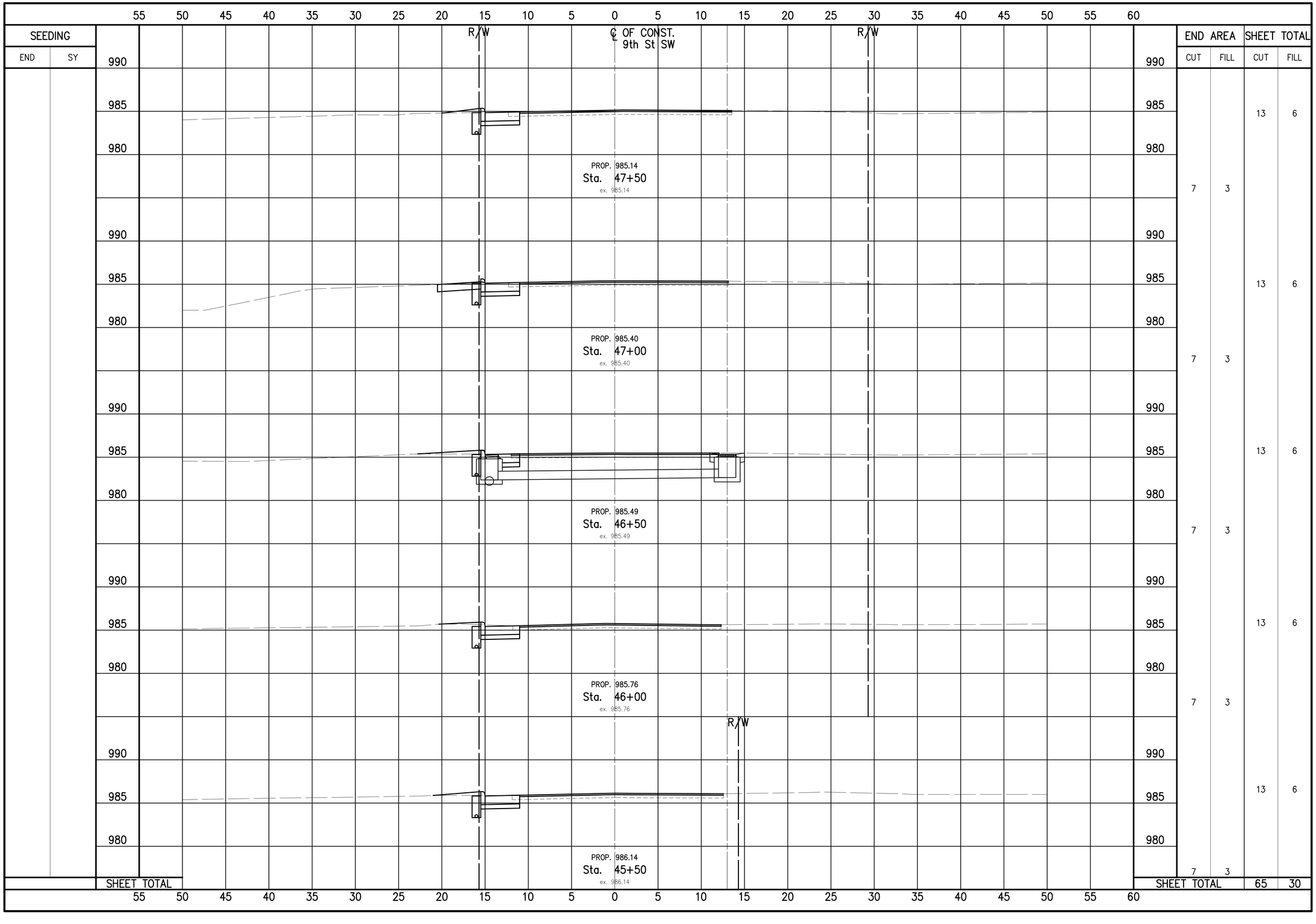

NW NE SW SE

VERTICAL IN FEET 5 2.5 0

0 2.5 5
HORIZONTAL SCALE IN FEET

CHECKED BY: KAD
DATE: Sept, 2012
DRAWN BY: FPW
DATE: Sept, 2012

REVISIONS:

DATE	DESCRIPTION

9TH St SW Improvement Project

9th St SW Cross Section (Sta. 45+50 to Sta. 47+50)

City of Massillon
Stark County, Ohio

Kathy Catazaro-Perry, Mayor
Massillon
City of Champions

DRAWING NAME: SHT32-9thXS16.dwg
CITY NUMBER: 09ST01

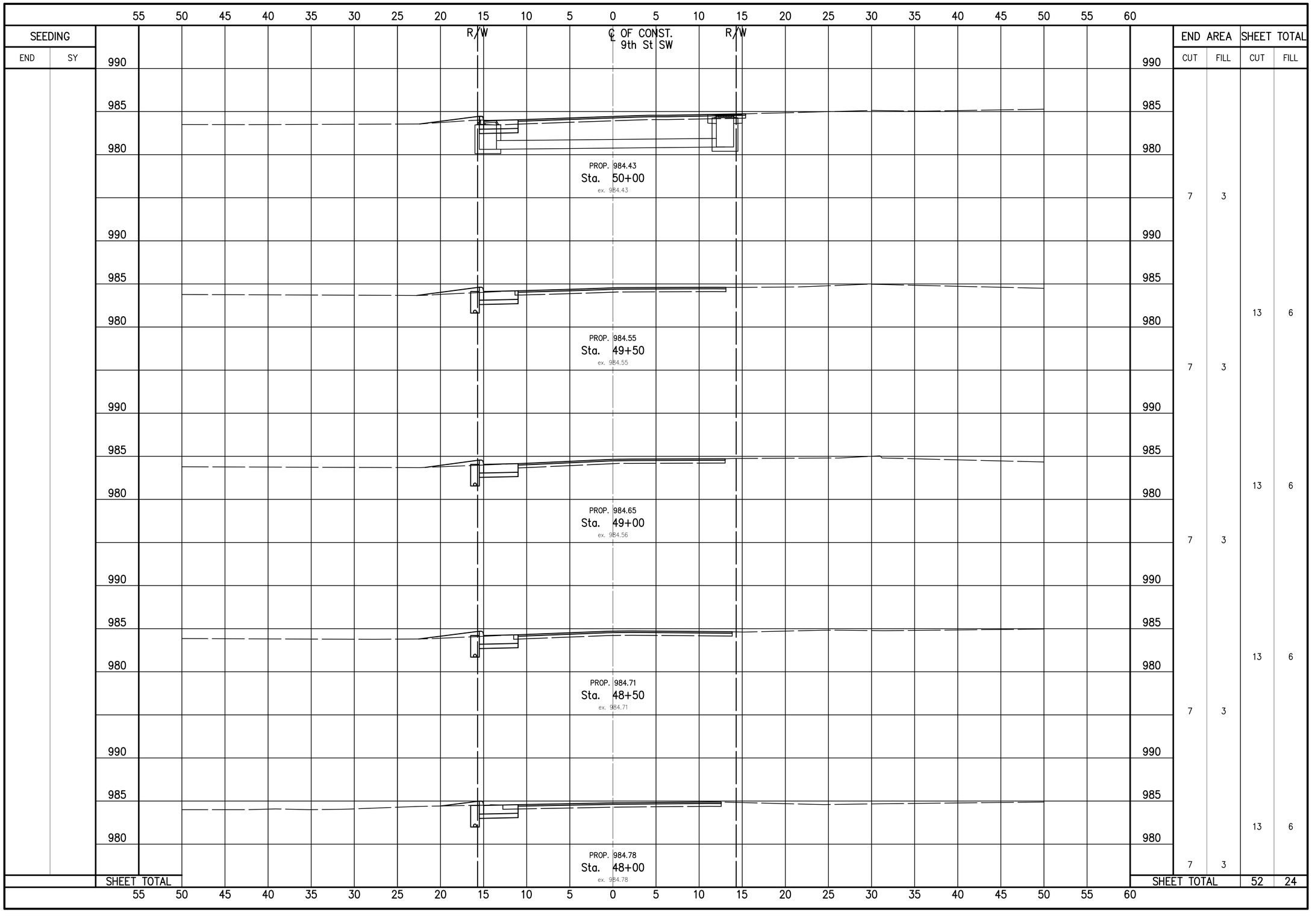

NW NE SW SE N

VERTICAL IN FEET 5 2.5 0

0 2.5 5
HORIZONTAL SCALE IN FEET

CHECKED BY: KAD
DATE: Sept, 2012
DRAWN BY: FPW
DATE: Sept, 2012

REVISIONS:

DATE	DESCRIPTION

9TH St SW Improvement Project
9th St SW Cross Section (Sta. 48+00 to Sta. 50+00)
City of Massillon
Stark County, Ohio

Kathy Catazaro-Perry, Mayor
Massillon
City of Opportunity

DRAWING NAME: SHT33-9thXS17.dwg
CITY NUMBER: 09ST01

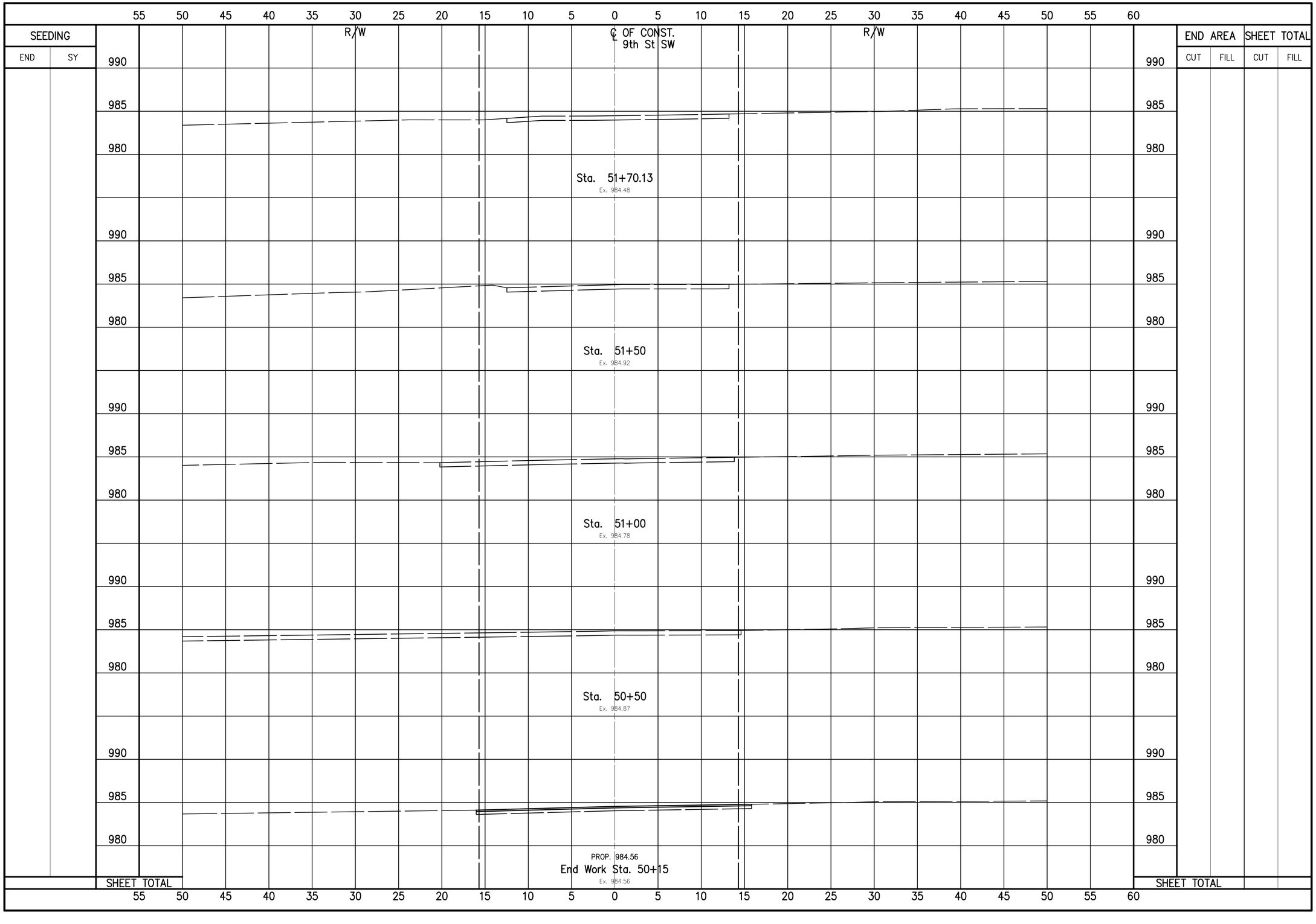

NW NE SW SE N

VERTICAL IN FEET 5 2.5 0

0 2.5 5
HORIZONTAL SCALE IN FEET

CHECKED BY: KAD
DATE: MAY, 2014
DRAWN BY: FPW
DATE: MAY, 2014

REVISIONS:

DATE	DESCRIPTION

9TH St SW Improvement Project
9th St SW Cross Section (Sta. 50+10 to Sta. 51+70.13)
City of Massillon
Stark County, Ohio

Kathy Catazaro-Perry, Mayor
Massillon
City of Champions

DRAWING NAME: SHT34-9thXS18.dwg
CITY NUMBER: 09ST01

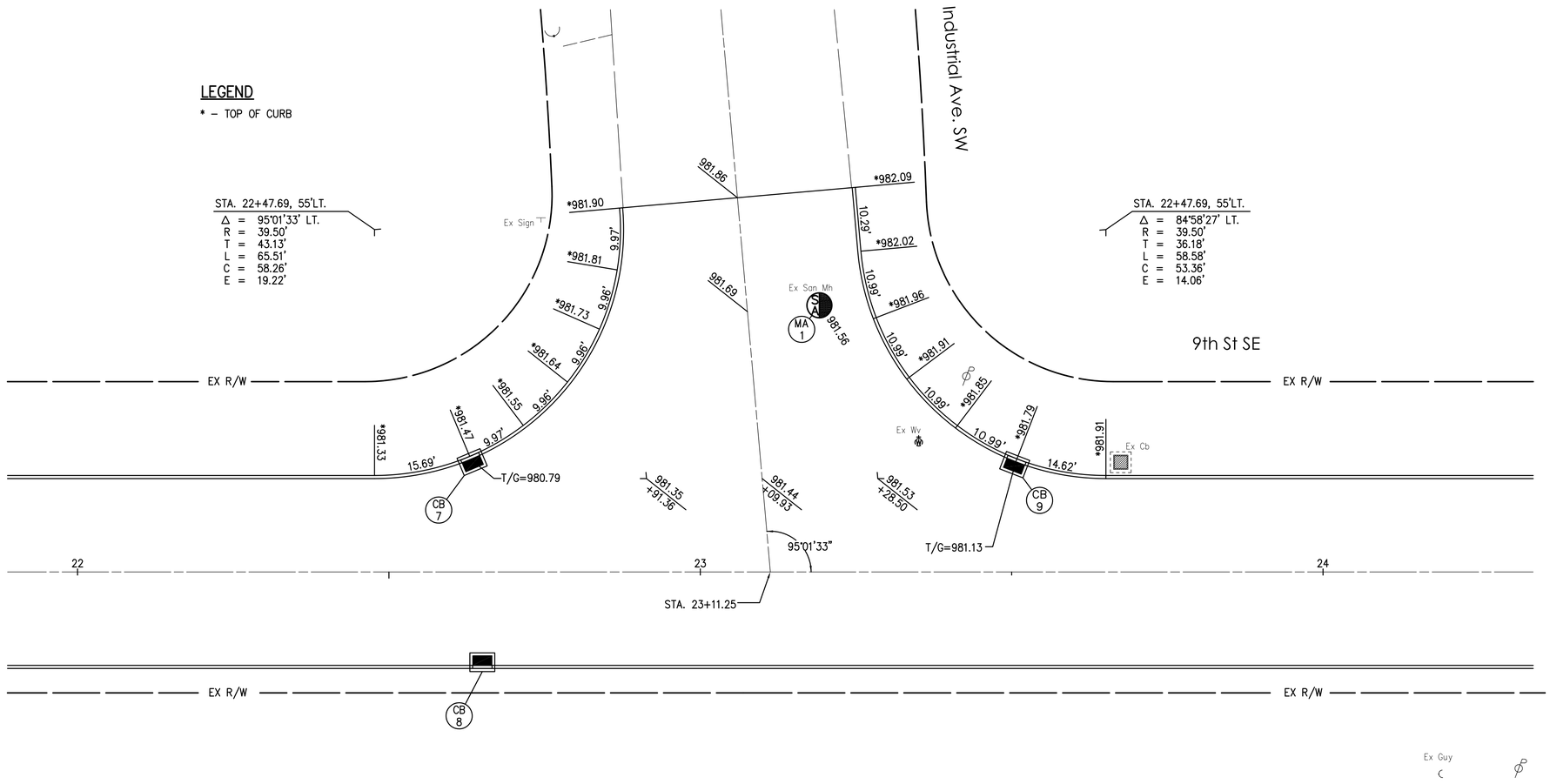

ITEM 251 – PARTIAL DEPTH PAVEMENT

A QUANTITY OF THIS ITEM SHALL BE PROVIDED FOR USE AS DIRECTED BT THE ENGINEER. THE ITEM SHALL CONSIST OF REPAIRING EXISTING LOCATIONS EXHIBITING SURFACE DETERIORATION AND PLACING 3"± OF ITEM 448 ASPHALT CONCRETE, TYPE 2. THE ASPHALT CONCRETE SHALL BE COMPACTED WITH A TYPE 1 PNEUMATIC TIRE ROLLER AND A STEEL WHEEL ROLLER AS PER 401.13. IT IS NOT THE INTENT TO REPAIR EVERY DETERIORATED AREA WITHIN THE PROJECT. THE ENGINEER SHALL DETERMINE WHICH AREAS ARE TO BE REPAIRED. THIS ITEM SHALL BE PERFORMED WITHIN 7 DAYS AFTER THE COMPLETION OF MAINLINE PAVEMENT PLANING. PAYMENT SHALL BE BASE ON THE ACTUAL NUMBER OF SQUARE YARDS OF PAVEMENT REPAIR. THE FOLLOWING ESTIMATED QUANTITY HAS BEEN CARRIED TO THE BID TAB.

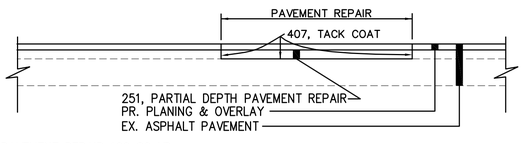

ITEM 251 – PARTIAL DEPTH PAVEMENT REPAIR 100 SQ YD

ITEM 253 – PAVEMENT REPAIR

A QUANTITY OF THIS ITEM SHALL BE PROVIDED FOR USE AS DIRECTED BY THE ENGINEER. THIS ITEM SHALL CONSIST OF CUTTING AND REMOVING DETERIORATED PAVEMENT FULL DEPTH AND PLACING 12"± 301 ASPHALT CONCRETE BASE, PG64–22. THE MAXIMUM COMPACTED DEPTH OF ANY ONE LAYER SHALL BE 6 INCHES. UNLESS OTHERWISE DIRECTED BY THE ENGINEER, THIS ITEM SHALL BE PERFORMED AFTER THE COMPLETION OF MAINLINE PAVEMENT PLANING. ALSO, THIS ITEM SHALL COMMENCE WITHIN 7 DAYS OF THE COMPLETION OF THE MAINLINE PAVEMENT PLANING. IT IS NOT THE INTENT TO REPAIR EVERY DETERIORATED AREA WITHIN THE PROJECT. THE ENGINEER SHALL DETERMINE WHICH AREAS ARE TO BE REPAIRED. PAYMENT SHALL BE BASED ON THE ACTUAL NUMBER OF SQUARE YARDS OF PAVEMENT REMOVED AND REPLACED TO THE LIMITS DESIGNATED BY THE ENGINEER. THE FOLLOWING ESTIMATED QUANTITY HAS BEEN INCLUDED IN THE BID FORM.

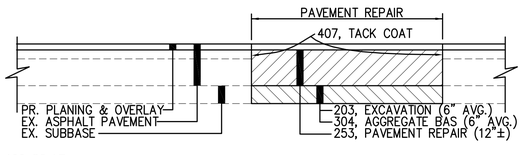

ITEM 253, PAVEMENT REPAIR 100 SQ YD

VERTICAL IN FEET 0 5 10

HORIZONTAL SCALE IN FEET 0 5 10

CHECKED BY: KAD
DATE: Sept, 2012
DRAWN BY: FPW
DATE: Sept, 2012

REVISIONS:

DATE	DESCRIPTION

9th St. SW Intersection Project
9th St. SW and Industrial Ave SW Intersection Details
City of Massillon
Stark County, Ohio

Kathy Catazaro-Perry, Mayor
Massillon
City of Champions

DRAWING NAME: SHT35–9thintdetl1.dwg
CITY NUMBER: 09st01

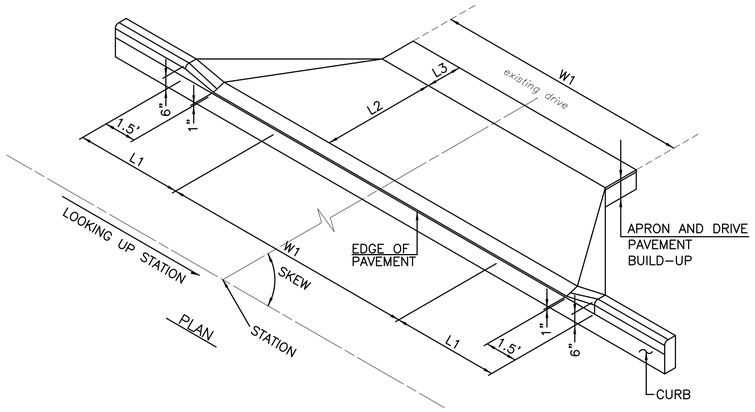

DRIVE ALONG CURBED AREA

NOT TO SCALE

APRON AND DRIVE PAVEMENT BUILD-UP

A.	8"	452	PLAIN PORTLAND CEMENT CONCRETE
B.	2"	448	ASPHALT CONCRETE
	8"	301	BITUMINOUS AGGREGATE BASE

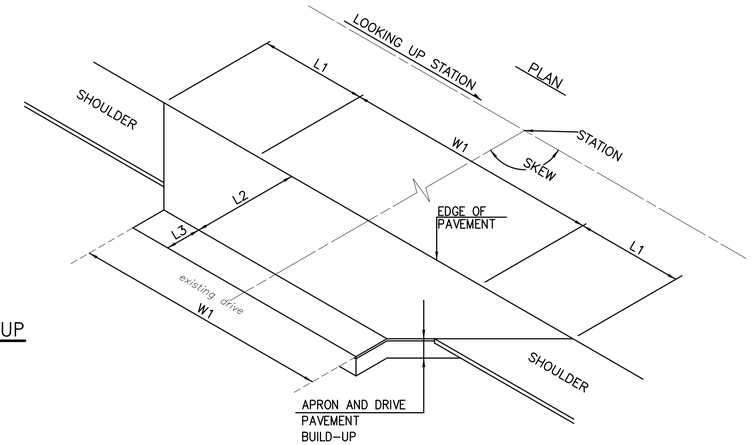

DRIVE ALONG NON-CURBED AREA

NOT TO SCALE

NOTES

1. TYPE A SHALL BE USED TO REPLACE ANY EXISTING CONCRETE DR.
2. TYPE B SHALL BE USED TO REPLACE ANY EXISTING DRIVE EXCEPT FOR CONCRETE.
3. ITEM 452SPEC. CONCRETE DRIVE AND ITEM 448SPEC. ASPHALT DRIVE SHALL INCLUDE ALL MATERIALS, LABOR, AND REMOVAL FOR PROPER INSTALLATION OF OF NEW APRONS AND DRIVES AS SHOWN ON THIS SHEET.

SHEET No.	REFERENCE No.	STATION	SIDE	DRIVE TYPE	SKEW	L1	L2	L3	W1	452SPEC CONCRETE DRIVE (A)	448SPEC ASPHALT DRIVE (B)	452SPEC CONCRETE DRIVE (A)	448SPEC ASPHALT DRIVE (B)
						FT.	FT.	FT.	FT.	S. Y.	S. Y.	S. Y.	S. Y.
		9th ST SW											
7	DR-1	9+50	RT.	COMM.	90°	3.75	5	AS DIRECTED BY ENGINEER	67.5		40	AS DIRECTED BY ENGINEER	AS DIRECTED BY ENGINEER
8	DR-2	14+45	LT.	COMM.	120°05'	10	5		10		17		
8	DR-3	15+09	RT.	COMM.	139°54'	10	7		14		19		
9	DR-4	17+45.5	RT.	COMM.	90°	5	5		50		31		
9	DR-5	18+76	LT.	COMM.	90°	5	8		17		20		
10	DR-6	25+43	LT.	COMM.	90°	5	5		56		34		
11	DR-7	28+09.5	LT.	COMM.	90°	5	5		38		24		
11	DR-8	30+30	LT.	COMM.	90°	5	5		31		20		
12	DR-9	33+95	RT.	COMM.	90°	4	3		17		9		
13	DR-10	35+57	LT.	COMM.	90°	10	10		36		52		
14	DR-11	43+33	LT.	COMM.	90°	5	5		29		21		
15	DR-12	44+04	LT.	COMM.	90°	5	5		19		15		
15	DR-13	47+05	LT.	COMM.	90°	5	5		40		26		
15	DR-14	47+65	LT.	COMM.	90°	5	5		12	13			
16	DR-15	49+21.5	LT.	COMM.	90°	5	5		17		14		
TOTAL										13	342	27	200

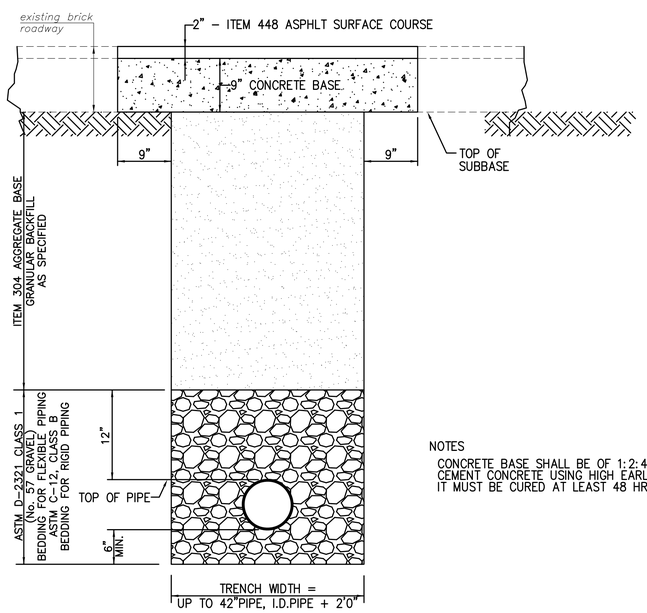

NOTES

CONCRETE BASE SHALL BE OF 1:2:4, 6 BAG MIX, PORTLAND CEMENT CONCRETE USING HIGH EARLY STRENGTH CEMENT AND IT MUST BE CURED AT LEAST 48 HRS.

TRENCH DETAIL

NOT TO SCALE

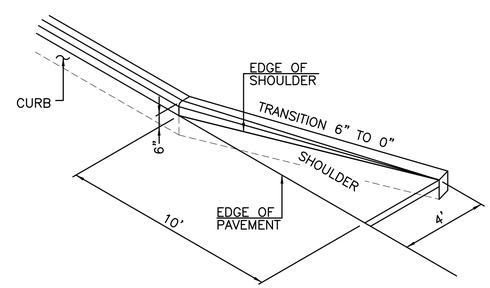

CURB TRANSITION DETAILS

NOT TO SCALE

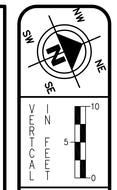

0 5 10
HORIZONTAL SCALE IN FEET

CHECKED BY: KAD
DATE: Sept, 2012
DRAWN BY: FPW
DATE: Sept, 2012

REVISIONS:

DATE	DESCRIPTION

9th St. SW Improvement Project
9th St. SW Miscellaneous Details
City of Massillon
Stark County, Ohio

Kathy Catazaro-Perry, Mayor
Massillon
City of Champions

DRAWING NAME: SHT36-9thdrdetl.dwg
CITY NUMBER: 09st01

REF. No.	SIDE	STATION FROM	STATION TO	603 24" TYPE B CONDUIT	604 HEADWALL TYPE ODOT HW 2.1	601 ROCK CHANNEL PROTECT W/FILTER TYPE B		
				LF	EACH	CY		
DP-4	CL	11+27.69	14+23.5(9TH)	100				
HW-1	CL	11+27.69			1			
RP-1	CL	11+21.69	11+27.69			0.66		
TOTALS CARRIED TO GENERAL SUMMARY				100	1	0.66		

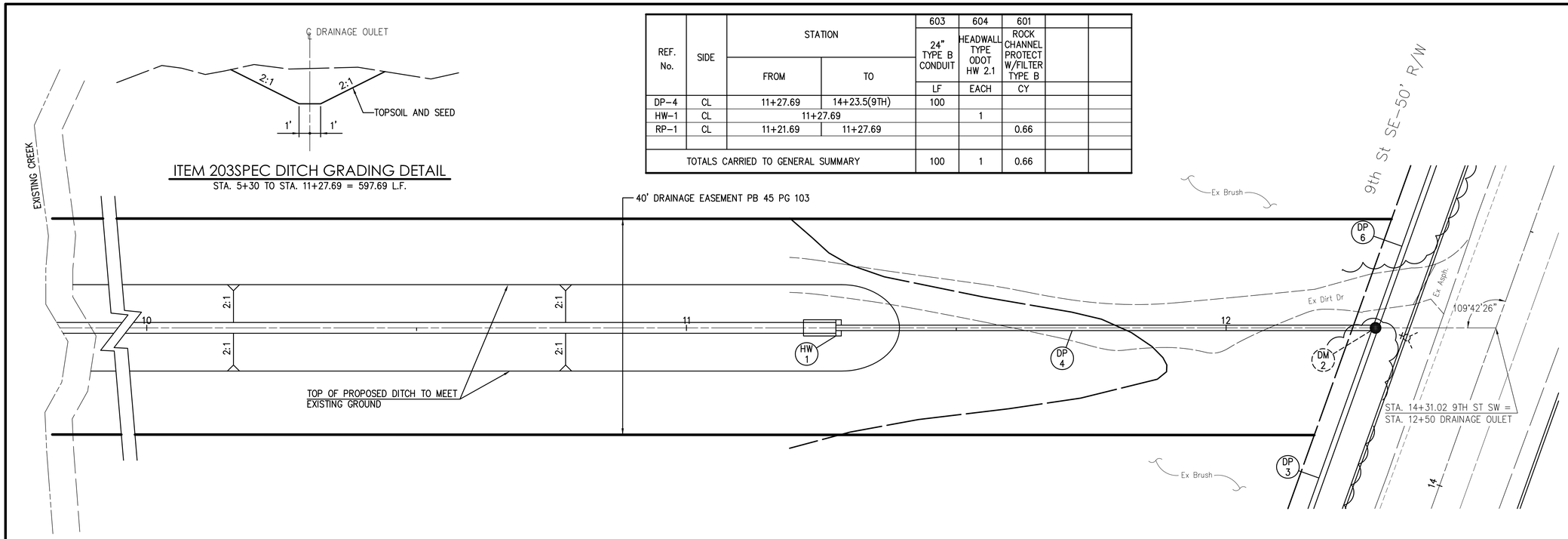

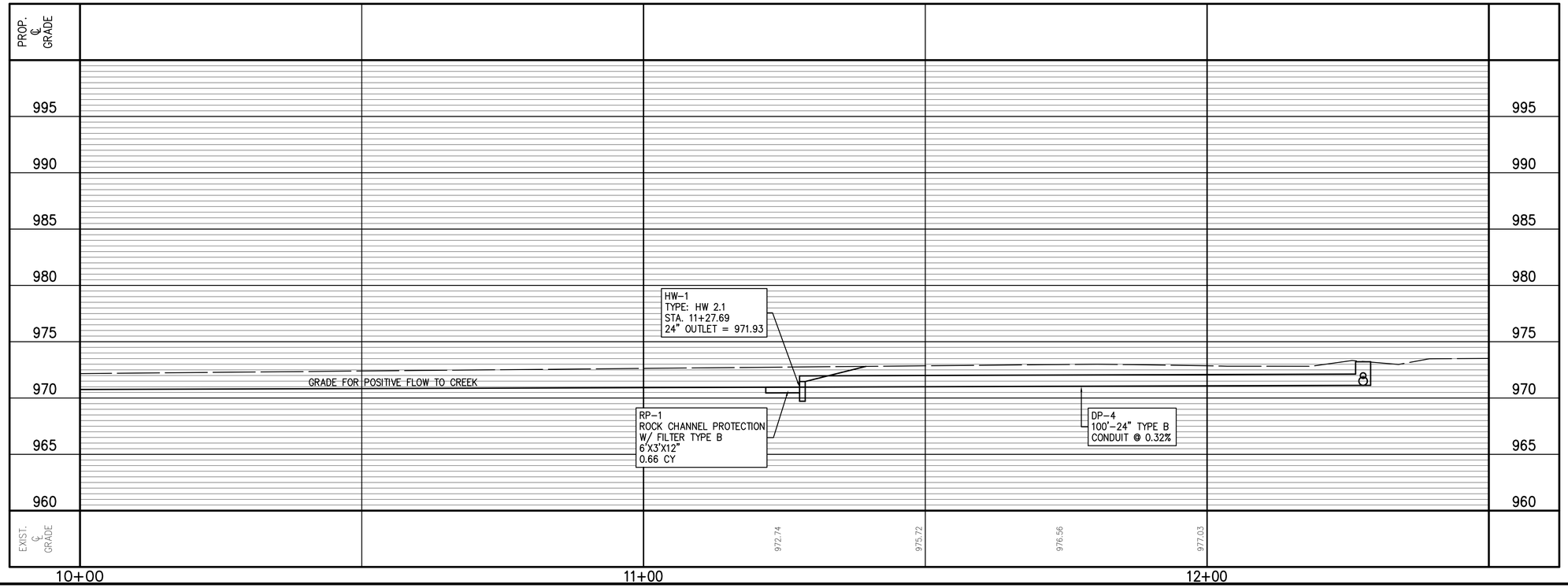

NW NE SW SE

VERTICAL IN FEET 10 5 0

0 5 10
HORIZONTAL SCALE IN FEET

CHECKED BY: KAD
DATE: Sept, 2012
DRAWN BY: FPW
DATE: Sept, 2012

REVISIONS:

DATE	DESCRIPTION

9th St. SW Improvement Project
Drainage Plan and Profile
City of Massillon
Stark County, Ohio

Kathy Catazaro-Perry, Mayor
Massillon City of Champions

DRAWING NAME: SHT37-drapp1.DWG
CITY NUMBER: 09st01

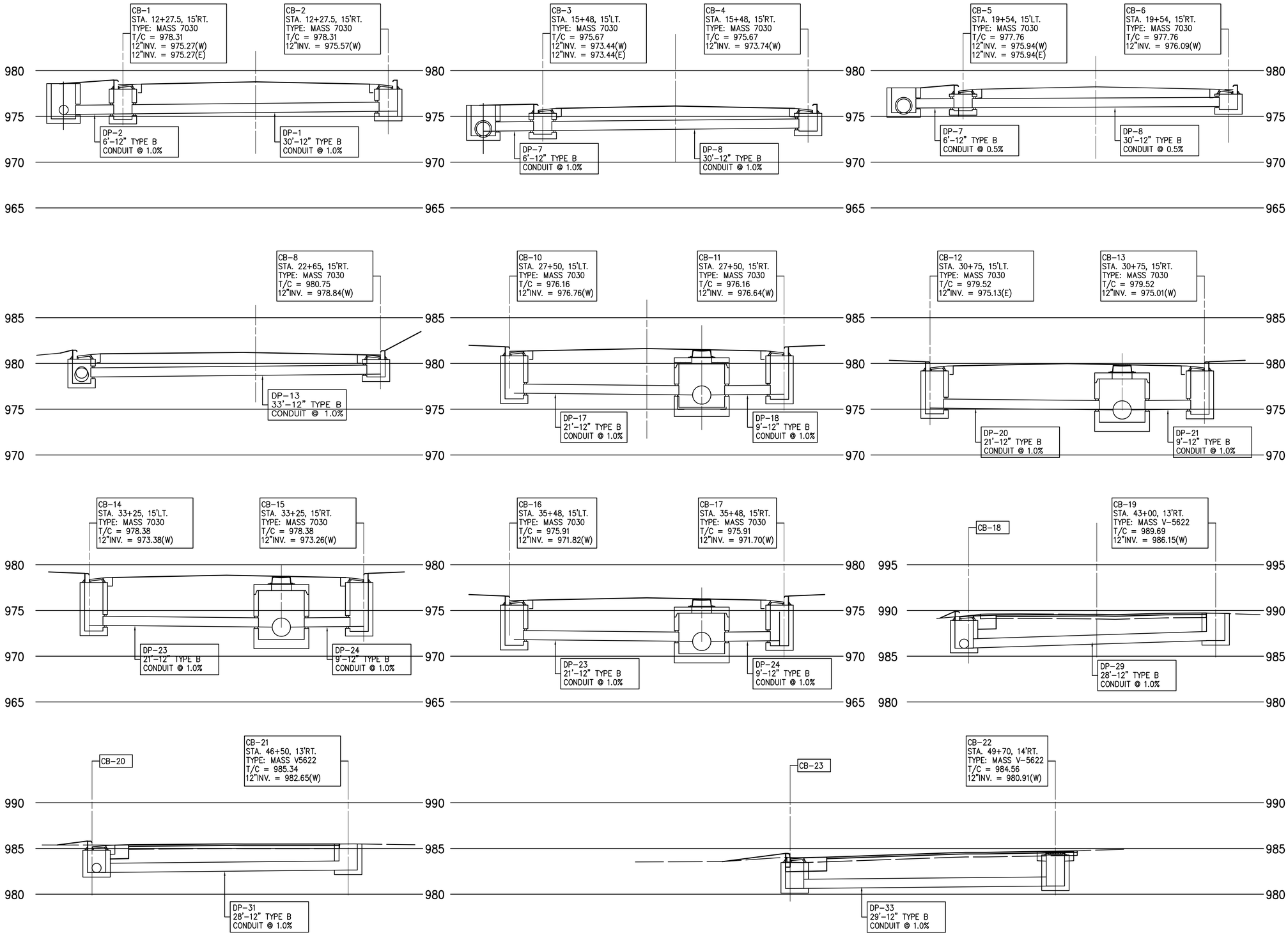

NW NE SW SE N

VERTICAL IN FEET 20 10 0

0 10 20
HORIZONTAL SCALE IN FEET

CHECKED BY: KAD
DATE: MAY, 2014
DRAWN BY: FPW
DATE: MAY, 2014

REVISIONS:

DATE	DESCRIPTION

9th St. SW Improvement Project
Drainage Profiles
City of Massillon
Stark County, Ohio

Kathy Catazaro-Perry, Mayor
Massillon City of Champions

DRAWING NAME: Sht39-Draprf.DWG
CITY NUMBER: 09st01

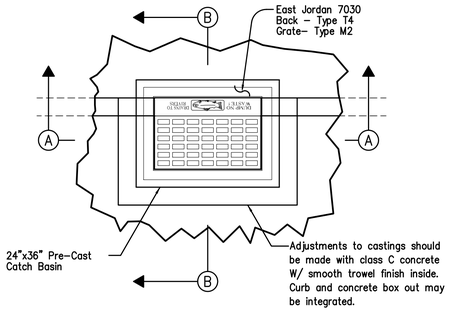

PLAN VIEW

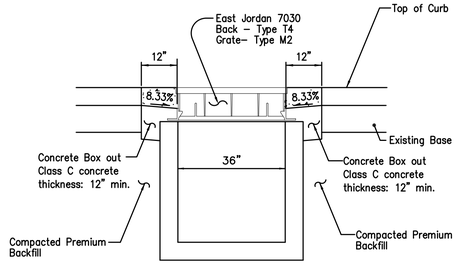

SECTION A–A

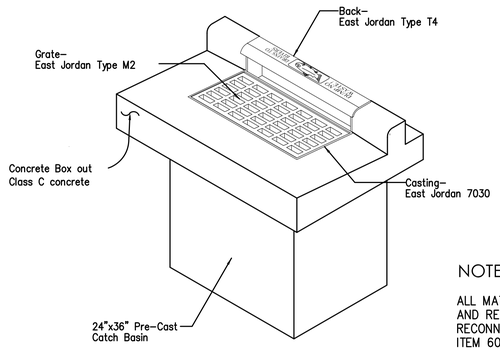

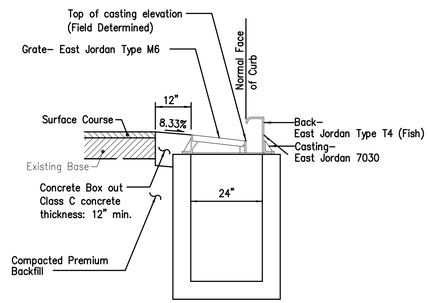

SECTION B–B

NOTE:

ALL MATERIALS, LABOR, AND REMOVAL TO PERFORM PROPER INSTALLATION AND REHABILITATION OF CATCH BASIN INCLUDING ALL CONDUIT AND RECONNECTIONS SHALL BE INCLUDED IN UNIT PRICE BID:
ITEM 604SPEC CATCH BASIN REHAB. TYPE A – EACH

ITEM 604 MASS7030

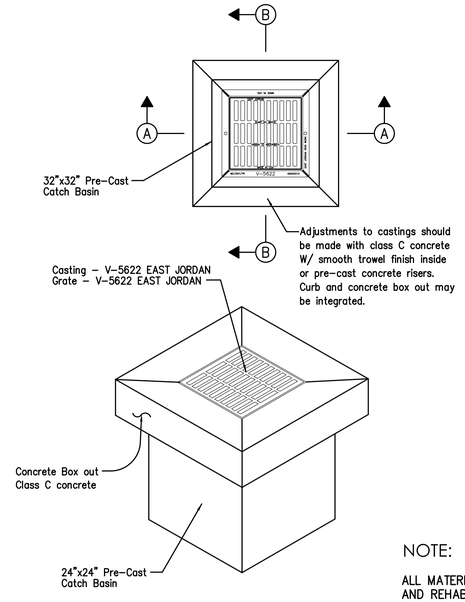

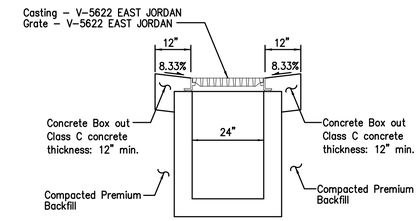

SECTION A–A

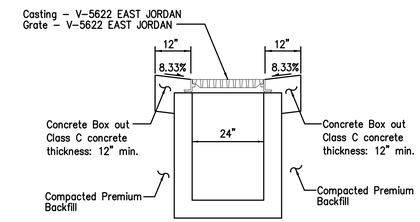

SECTION B–B

NOTE:

ALL MATERIALS, LABOR, AND REMOVAL TO PERFORM PROPER INSTALLATION AND REHABILITATION OF CATCH BASIN INCLUDING ALL CONDUIT AND RECONNECTIONS SHALL BE INCLUDED IN UNIT PRICE BID:
ITEM 604SPEC CATCH BASIN REHAB. TYPE B – EACH

ITEM 604 CATCH BASIN MASS V5622

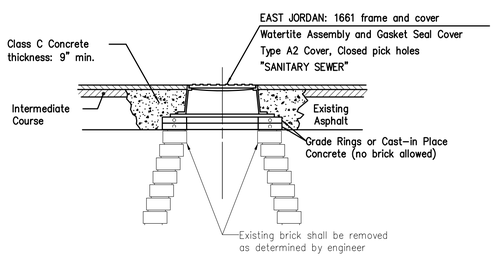

ITEM 604 SANITARY MANHOLE MASS1048-AGS-R

WORK SHALL INCLUDED ALL REMOVAL AND DISPOSAL OF EXISTING

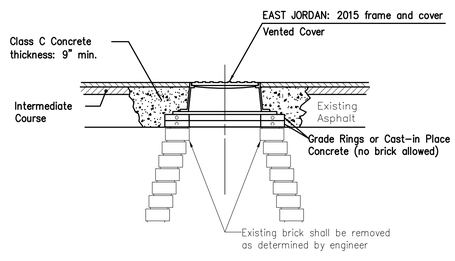

ITEM 604 DRAINAGE MANHOLE MASS1048-R

WORK SHALL INCLUDED ALL REMOVAL AND DISPOSAL OF EXISTING

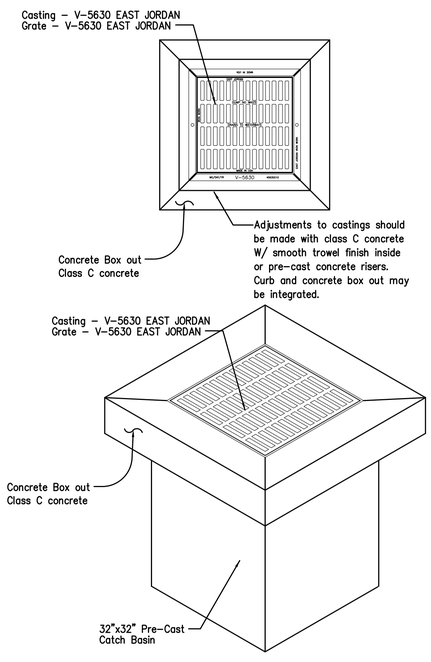

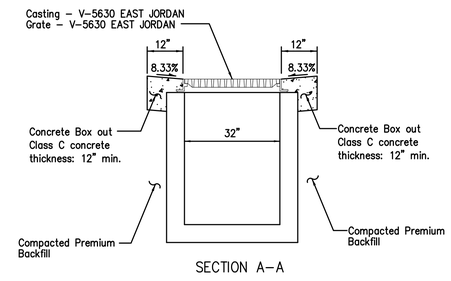

SECTION A–A

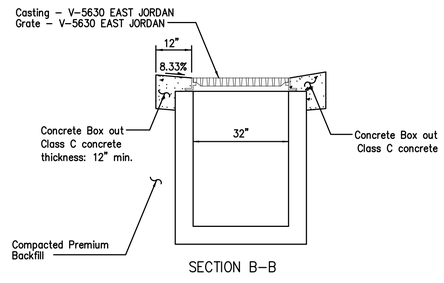

SECTION B–B

NOTE:

ALL MATERIALS, LABOR, AND REMOVAL TO PERFORM PROPER INSTALLATION AND REHABILITATION OF CATCH BASIN INCLUDING ALL CONDUIT AND RECONNECTIONS SHALL BE INCLUDED IN UNIT PRICE BID:
ITEM 604SPEC CATCH BASIN REHAB. TYPE B – EACH

ITEM 604 CATCH BASIN MASS V5630

NW NE SW SE N

VERTICAL IN FEET 0 1 2

HORIZONTAL SCALE IN FEET 0 1 2

CHECKED BY: KAD

DATE: MAY, 2014

DRAWN BY: FPW

DATE: MAY, 2014

REVISIONS: DATE	DESCRIPTION

9th St. SW Improvement Project
Details
City of Massillon
Stark County, Ohio

Kathy Catazaro-Perry, Mayor
Massillon City of Champions

DRAWING NAME: SHT37–mhdetl.DWG

CITY NUMBER: 09st01

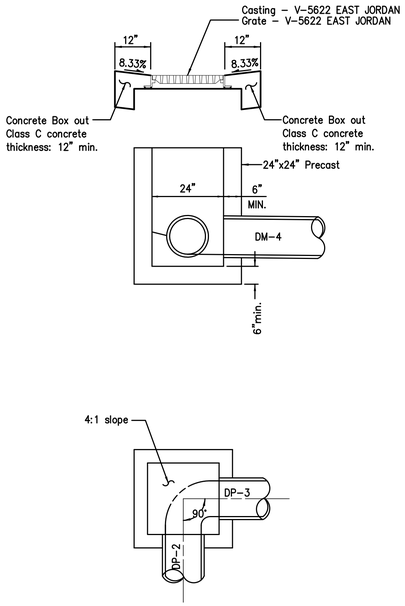

DM-1
CATCH BASIN MASS V5622

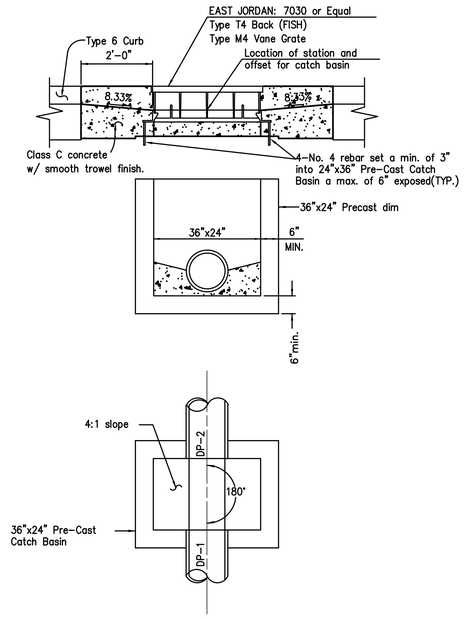

CB-1
CATCH BASIN MASS7030

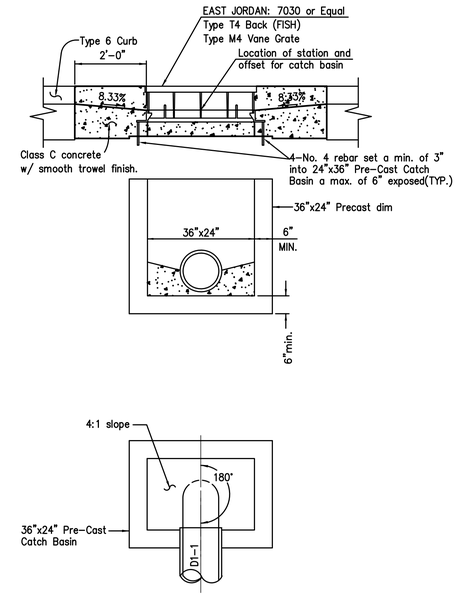

CB-2
CATCH BASIN MASS7030

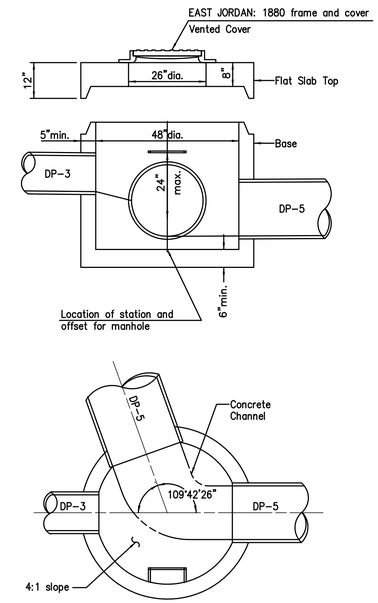

DM-2
DRAINAGE MANHOLE MASS1048

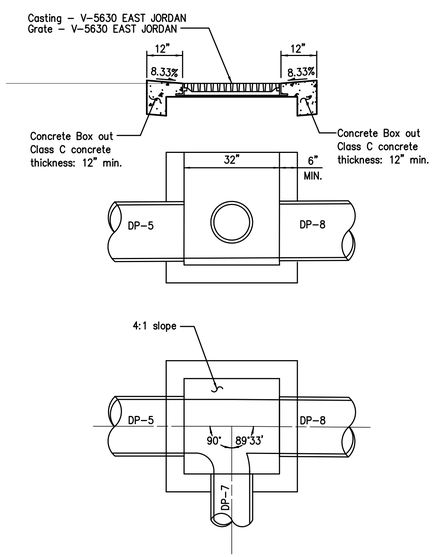

DM-3
CATCH BASIN MASS V5630

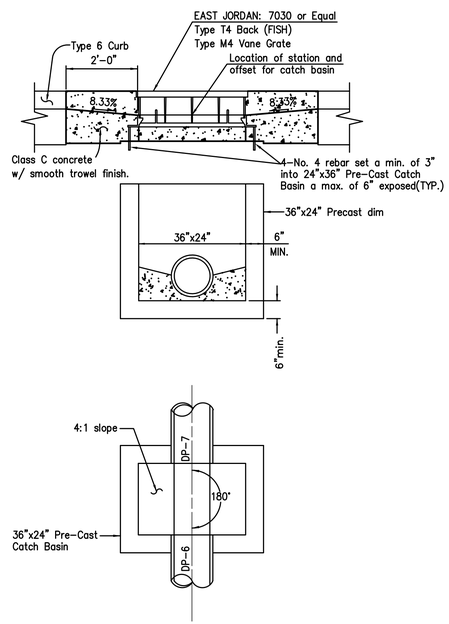

CB-3
CATCH BASIN MASS7030

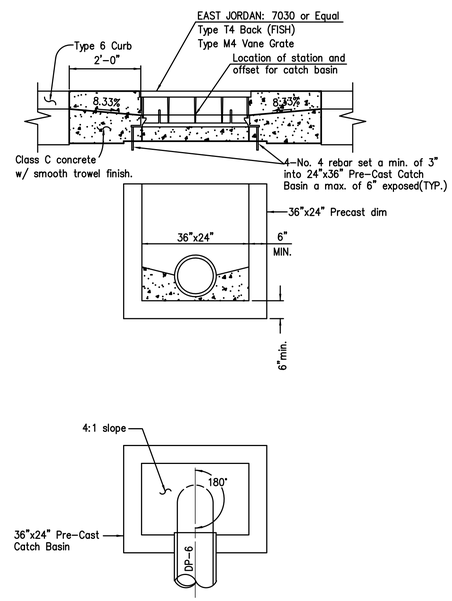

CB-4
CATCH BASIN MASS7030

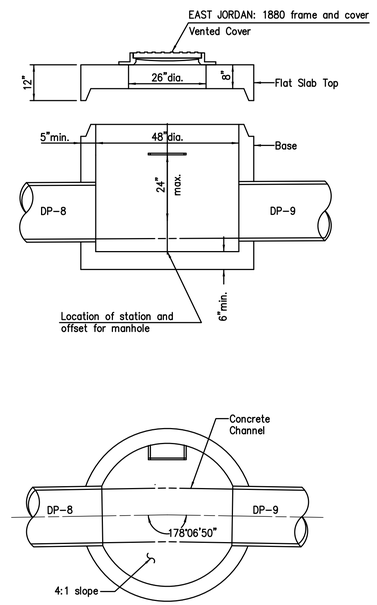

DM-4
DRAINAGE MANHOLE MASS1048

NW NE SW SE N

VERTICAL IN FEET 0 1 2

HORIZONTAL SCALE IN FEET 0 1 2

CHECKED BY: KAD
DATE: MAY, 2014
DRAWN BY: FPW
DATE: MAY, 2014

REVISIONS:

DATE	DESCRIPTION

9th St. SW Improvement Project
Drainage Details
City of Massillon
Stark County, Ohio

Kathy Catazaro-Perry, Mayor
Massillon City of Champions

DRAWING NAME: SHT40-Dradet1.DWG
CITY NUMBER: 09st01

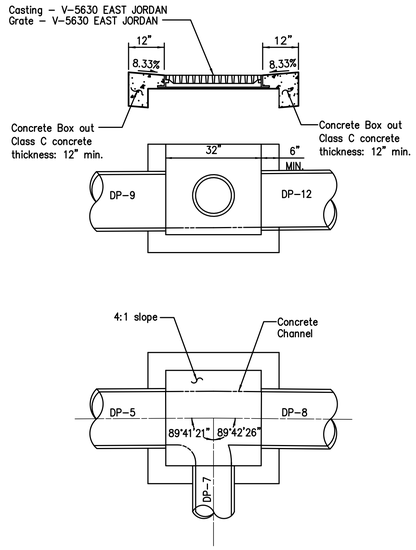

DM-5

CATCH BASIN MASS V5630

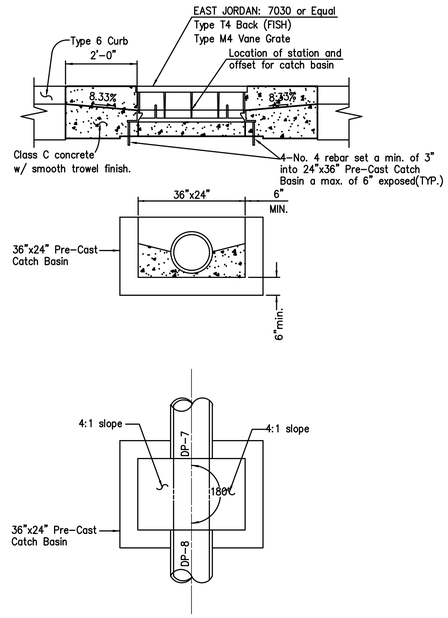

CB-5

CATCH BASIN MASS7030

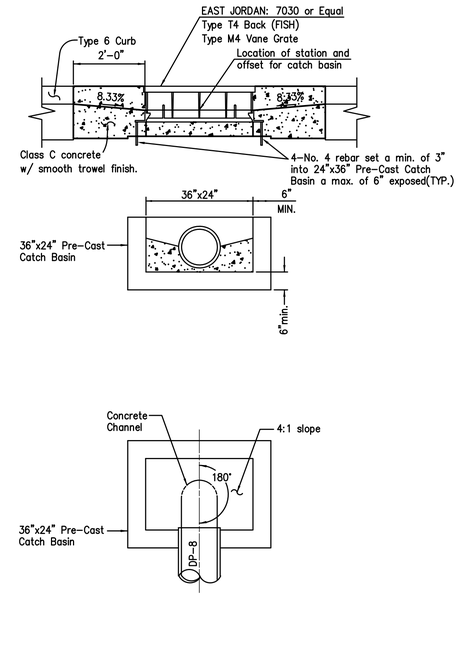

CB-6

CATCH BASIN MASS7030

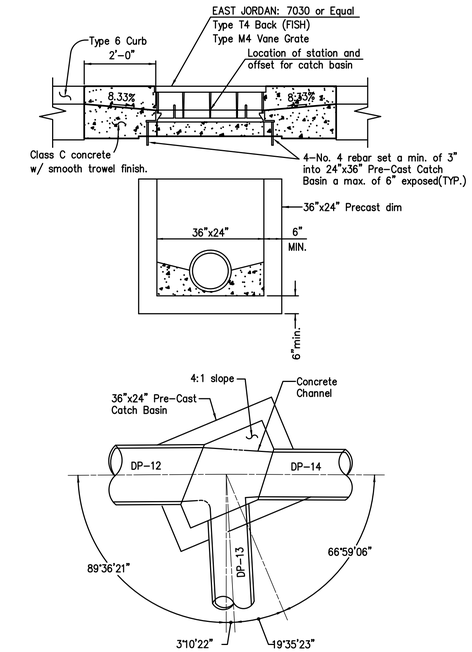

CB-7

CATCH BASIN MASS7030

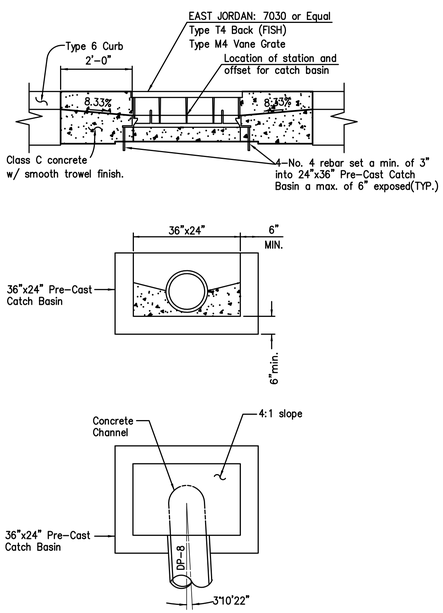

CB-8

CATCH BASIN MASS7030

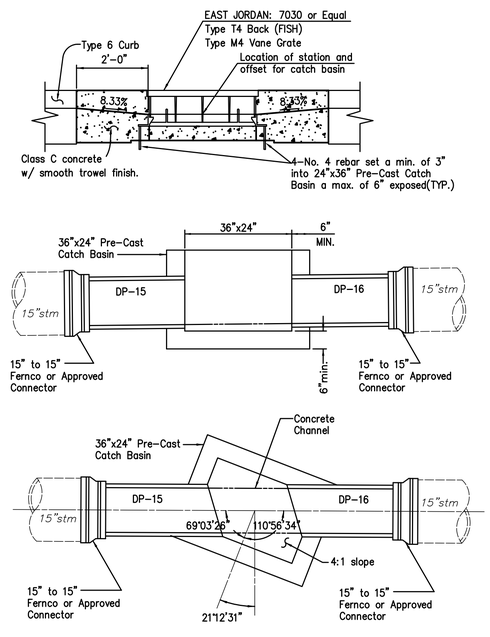

CB-9

CATCH BASIN MASS7030

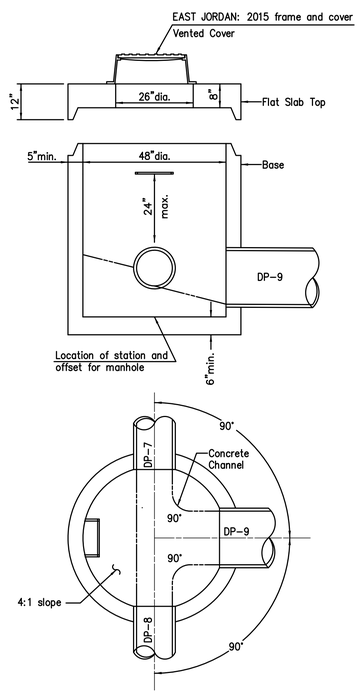

DM-6

DRTAINAGE MANHOLE MASS1048

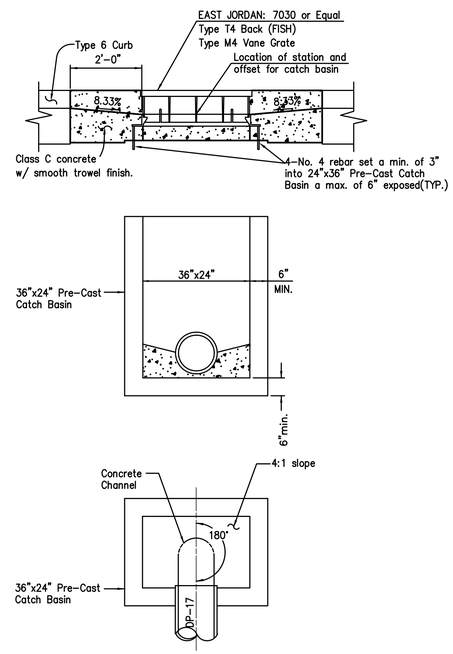

CB-10

CATCH BASIN MASS7030

NW NE SW SE N

VERTICAL IN FEET 0 1 2

0 1 2
HORIZONTAL
SCALE IN FEET

CHECKED BY: KAD
DATE: MAY, 2014
DRAWN BY: FPW
DATE: MAY, 2014

REVISIONS:

DATE	DESCRIPTION

9th St. SW Improvement Project
Drainage Details
City of Massillon
Stark County, Ohio

Kathy Catazaro-Perry, Mayor
Massillon City of Champions

DRAWING NAME: SHT41-Dradet2.DWG
CITY NUMBER: 09st01

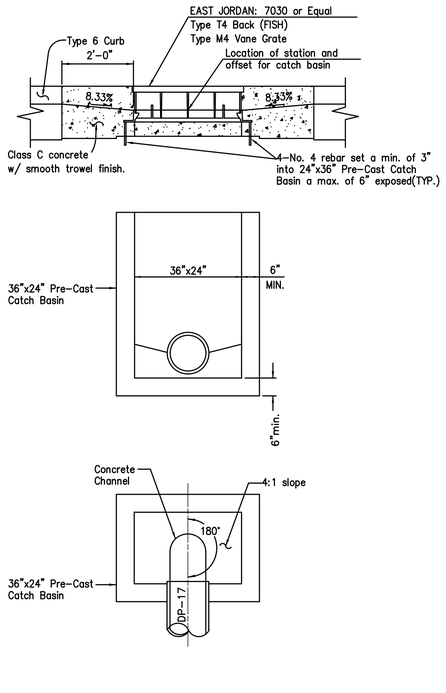

CB-11
CATCH BASIN MASS7030

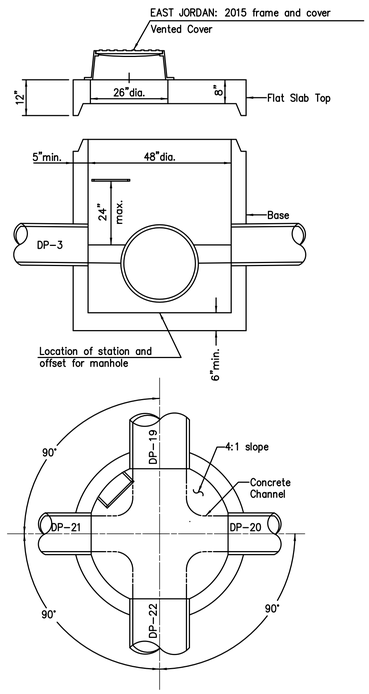

DM-7
DRAINAGE MANHOLE MASS1048

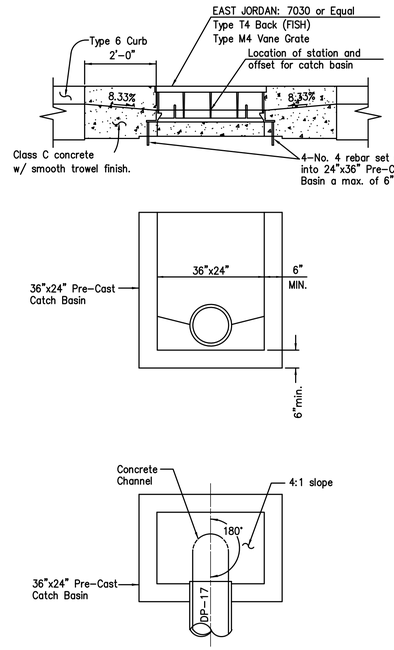

CB-13
CATCH BASIN MASS7030

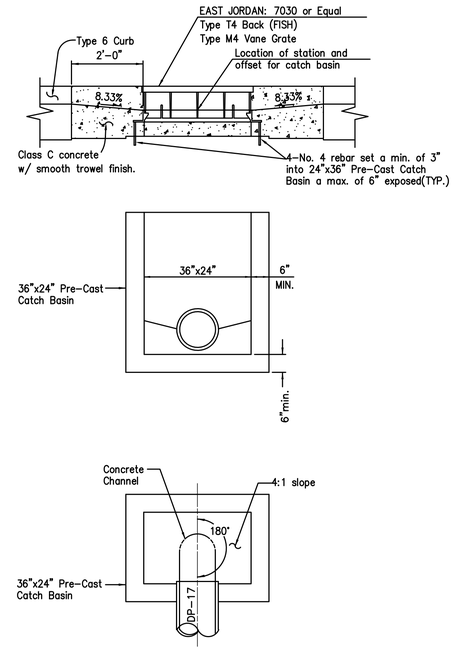

DM-9
CATCH BASIN MASS7030

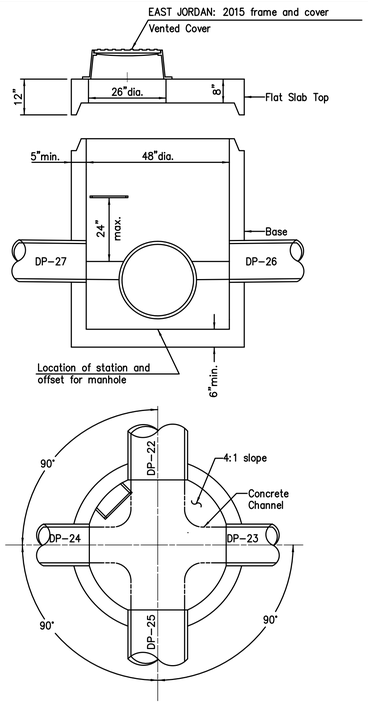

DM-8
DRAINAGE MANHOLE MASS1048

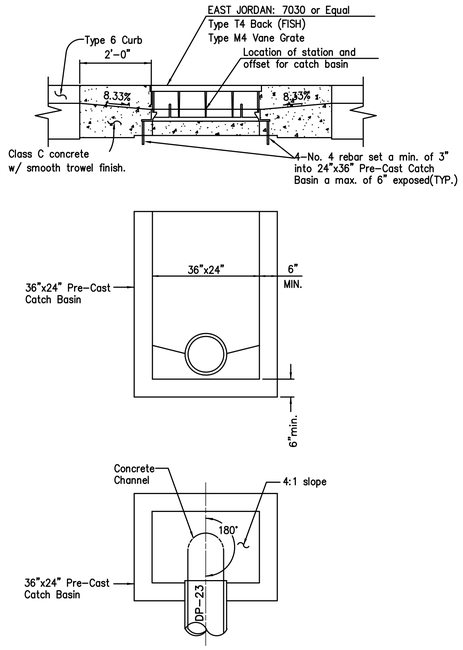

CB-14
CATCH BASIN MASS7030

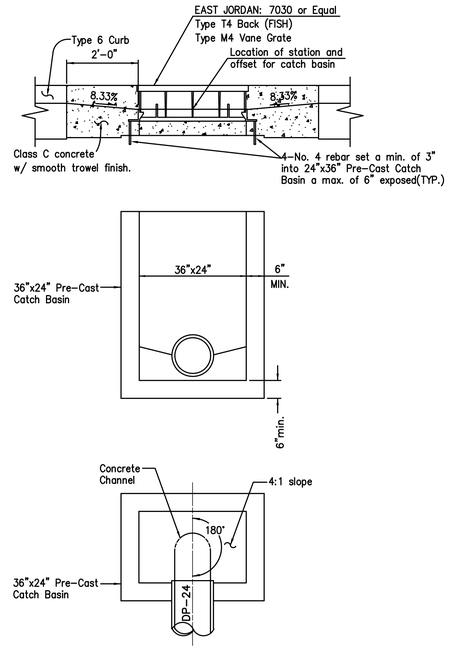

CB-15
CATCH BASIN MASS7030

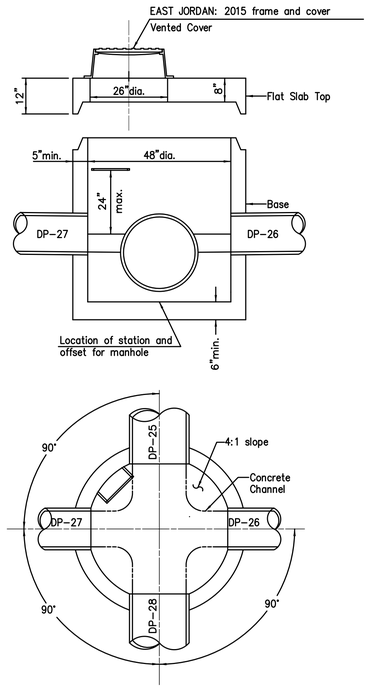

CB-16
DRAINAGE MANHOLE MASS1048

VERTICAL IN FEET 20 10 0

0 10 20
HORIZONTAL SCALE IN FEET

CHECKED BY: KAD
DATE: MAY, 2014
DRAWN BY: FPW
DATE: MAY, 2014

REVISIONS:

DATE	DESCRIPTION

9th St. SW Improvement Project
Drainage Details
City of Massillon
Stark County, Ohio

Kathy Catazaro-Perry, Mayor
Massillon City of Champions

DRAWING NAME: SHT42-Dradet3.DWG
CITY NUMBER: 09st01

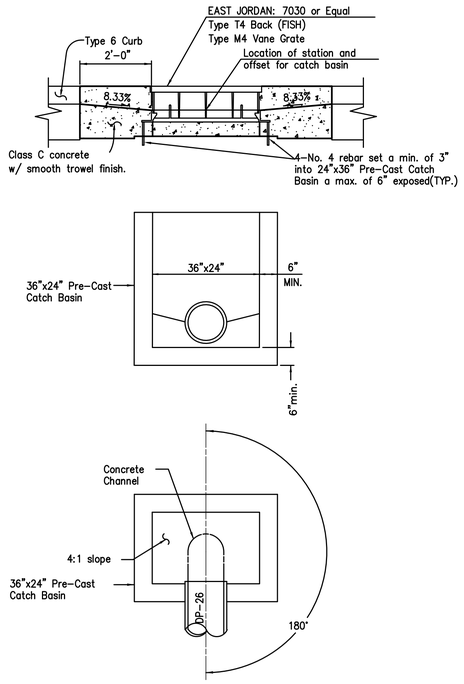

CB-16
CATCH BASIN MASS7030

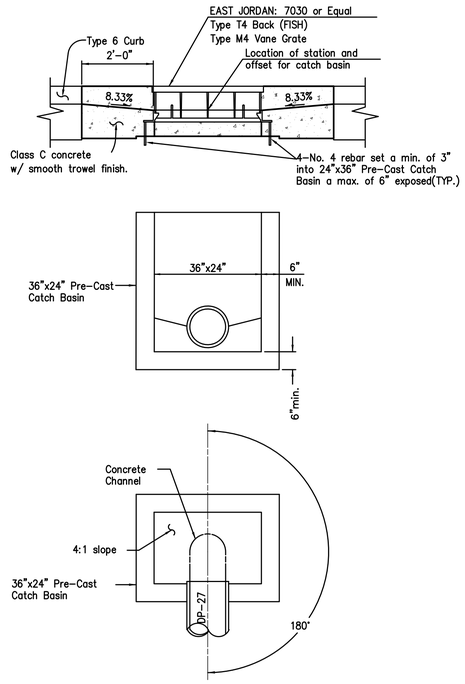

CB-17
CATCH BASIN MASS7030

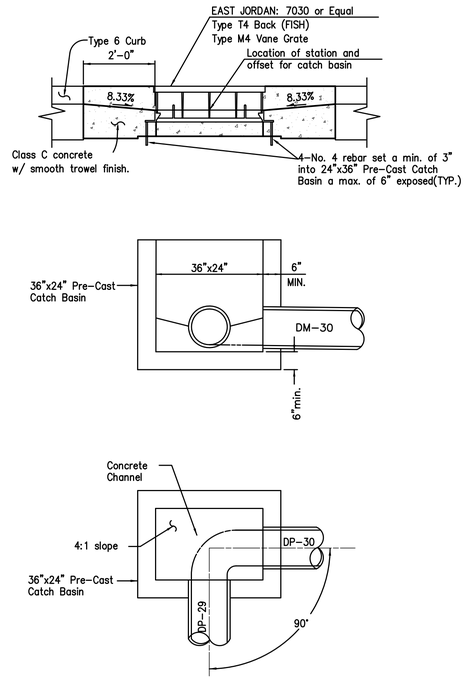

CB-18
CATCH BASIN MASS7030

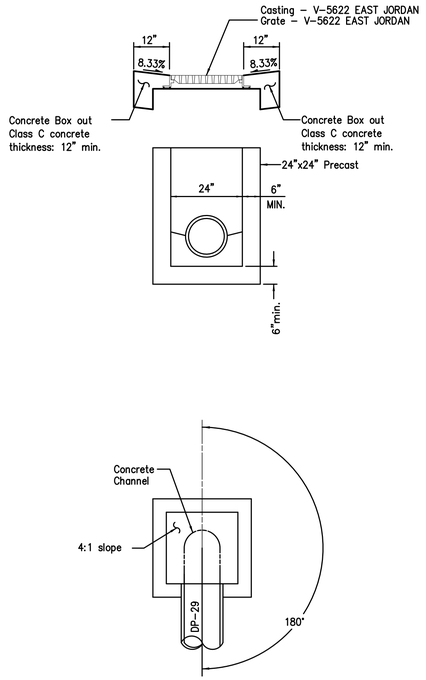

CB-19
CATCH BASIN MASS V5622

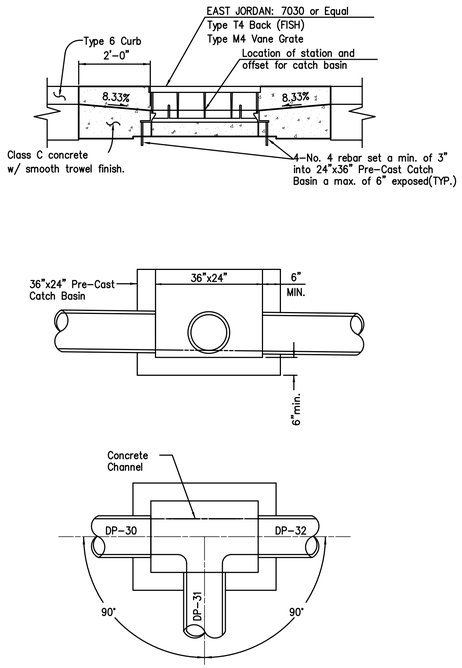

CB-20
CATCH BASIN MASS7030

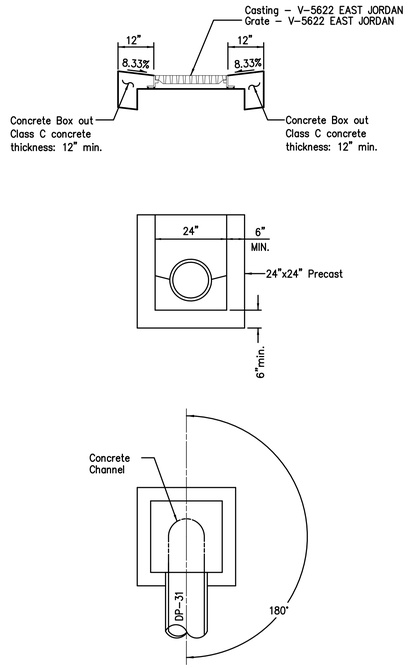

CB-21
CATCH BASIN MASS V5622

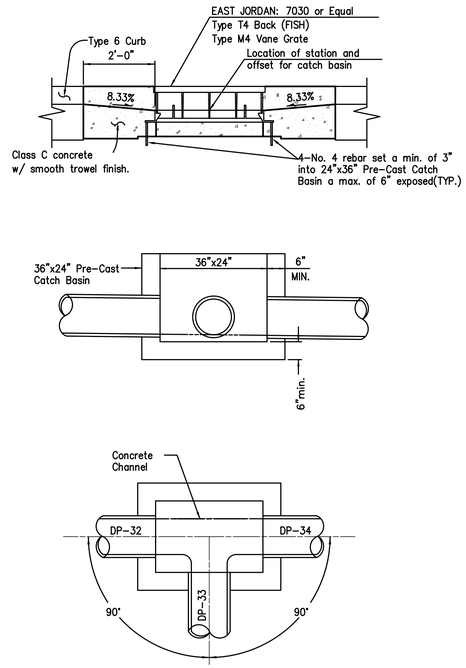

CB-23
CATCH BASIN MASS7030

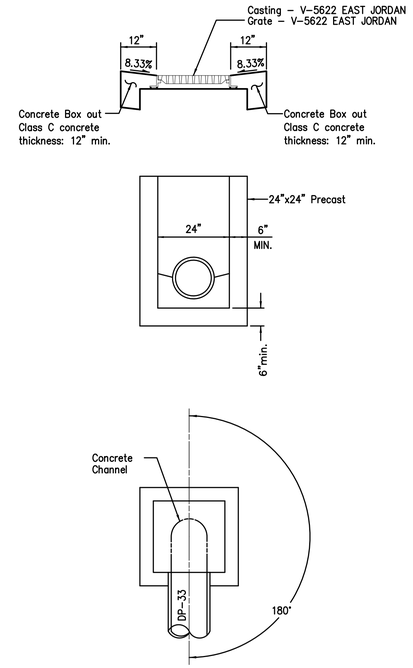

CB-22
CATCH BASIN MASS V5622

NW NE SW SE N

VERTICAL IN FEET 0 1 2

0 1 2
HORIZONTAL SCALE IN FEET

CHECKED BY: KAD
DATE: MAY, 2014
DRAWN BY: FPW
DATE: MAY, 2014

REVISIONS:

DATE	DESCRIPTION

9th St. SW Improvement Project
Drainage Details
City of Massillon
Stark County, Ohio

Kathy Catazaro-Perry, Mayor
Massillon City of Champions

DRAWING NAME: SHT43-Dradet4.DWG
CITY NUMBER: 09st01

CITY OF MASSILLON

CITY ENGINEER DEPARTMENT

STARK COUNTY, OHIO

9th ST. SW IMPROVEMENT PROJECT

PROJECT DESCRIPTION

FULL DEPTH PAVEMENT REPLACEMENT WITH CURB AND INSTALLATION OF DRAINAGE SYSTEM.

CONVENTIONAL SIGNS

RIGHT OF WAY • • • EXISTING: , PROPOSED:
COUNTY LINE • • • •
TOWNSHIP LINE • • •
CORPORATION LINE • •
FENCE LINE • • • • EXISTING: , PROPOSED:
GUARDRAIL • • • • EXISTING: , PROPOSED:
MANHOLES • • • • • EXISTING: , PROPOSED: , REHABILITATED:
CATCH BASINS • • EXISTING: , PROPOSED: , REHABILITATED:
SIGNS • • • • • • 1-POST: , 2-POST: , 3-POST: , STREET:
EXISTING POLES • • • POWER: , TELEPHONE , LIGHT , SPAN
PROPOSED POLES • • POWER: , TELEPHONE , LIGHT , SPAN
EXIST. UTILITIES • • • VALVE: , HYDRANT: , METERS: , GUY:

PERMIT TO INSTALL

SANITARY SEWER PERMIT TO INSTALL (P.T.I.) HAS BEEN RECEIVED FROM THE OHIO ENVIROMENTAL PROTECTION AGENCY PROTECTION AGENCY THIS_____DAY OF,_____, 20__.
PTI No. _____

UNDERGROUND UTILITIES

TWO WORKING DAYS
BEFORE YOU DIG
CALL 1-800-362-2764 (TOLL FREE)
OHIO UTILITIES PROTECTION SERVICE
NON-MEMBERS
MUST BE CALLED DIRECTLY

TWO WORKING DAYS
BEFORE YOU DIG
1-800-925-0988 (TOLL FREE)
OIL @ GAS PRODUCERS UNDERGROUND PROTECTION SERVICE

PLAN PREPARED BY:
CITY OF MASSILLON
Engineering Department

OWNER:
CITY OF MASSILLON
151 Lincoln Way East
Massillon, Ohio 44646

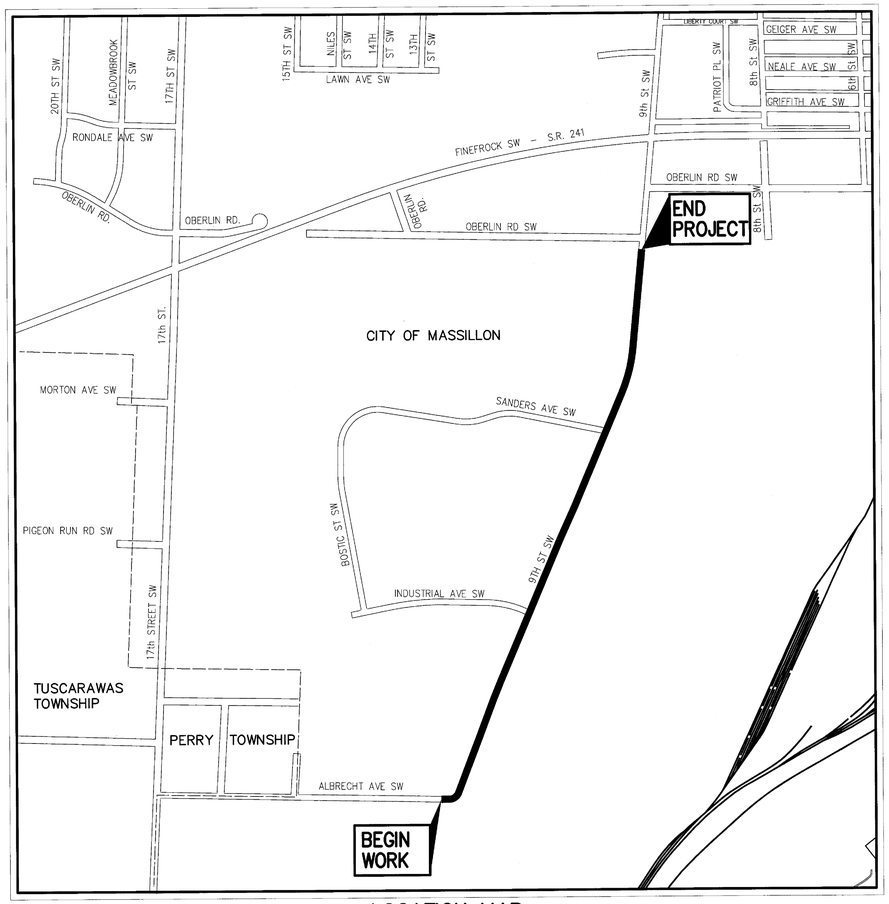

LOCATION MAP

PORTION TO BE IMPROVED • • • • • • • • • • • • •
STREETS •

Kathy Catazaro-Perry, Mayor
Massillon
City of Champions

INDEX OF SHEETS:

TITLE SHEET • • • • • • • • • • • • • 1
SCHEMATIC PLAN • • • • • • • • • • • 2
TYPICAL SECTIONS• • • • • • • • • • • 3
GENERAL NOTES • • • • • • • • • • • 4–5
GENERAL SUMMARY • • • • • • • • • • 5A
PAVEMENT CALCS • • • • • • • • • • • 6
PLAN AND PROFILE • • • • • • • • • • 7–16
CROSS-SECTIONS • • • • • • • • • • 17–34
INTERSECTION DETAIL • • • • • • • • • 35
MISCELLANEOUS DETAILS • • • • • • • • 36
DRAINAGE PLAN AND PROFILES • • • • 37–38
DRAINAGE DETAILS • • • • • • • • • • 39–43

CITY ENGINEER — KEITH A. DYLEWSKI, P.E., P.S. — 6/9/14 DATE

STATE OF OHIO
KEITH A. DYLEWSKI
E-70907
REGISTERED
PROFESSIONAL ENGINEER

CITY OF MASSILLON ELECTED OFFICIALS

KATHY CATAZARO-PERRY • • • • • • • • • • • • • • • • • • MAYOR
PERICLES G. STERGIOS • • • • • • • • LAW DIRECTOR/PROSECUTOR
JAYNE FERRERO • AUDITOR
MAUDE SLAGLE • • • • • • • • • • • • • • • • • • • TREASURER

COUNCIL
TONY M. TOWNSEND • • • • • • • • • • • • • • • • • PRESIDENT
SARITA CUNNINGHAM-HEDDERLY • • • • • • • • • • • • 1st WARD
NANCY HALTER• 2nd WARD
ANDREA SCASSA • • • • • • • • • • • • • • • • • • • 3rd WARD
SHADDRICK STINSON • • • • • • • • • • • • • • • • • 4th WARD
MEGAN STARRETT• • • • • • • • • • • • • • • • • • • 5th WARD
ED LEWIS • 6th WARD
PAUL MANSON • • • • • • • • • • • • • • • • • • • AT LARGE
MICHELLE DEL RIO-KELLER • • • • • • • • • • • • • • AT LARGE
MILAN CHOVAN• • • • • • • • • • • • • • • • • • • AT LARGE

NW NE SW SE
VERTICAL IN FEET 500 250 0
0 250 500
HORIZONTAL SCALE IN FEET

CHECKED BY: KAD
DATE: MAY, 2013
DRAWN BY: FPW
DATE: MAY, 2013

REVISIONS: DATE | DESCRIPTION

9th ST. SW IMPROVEMENT PROJECT
Title Sheet
City of Massillon
Stark County, Ohio

Kathy Catazaro-Perry, Mayor
Massillon
City of Champions

DRAWING NAME: SHT1-9thTitl.dwg
CITY NUMBER: 09ST01
1 / 43

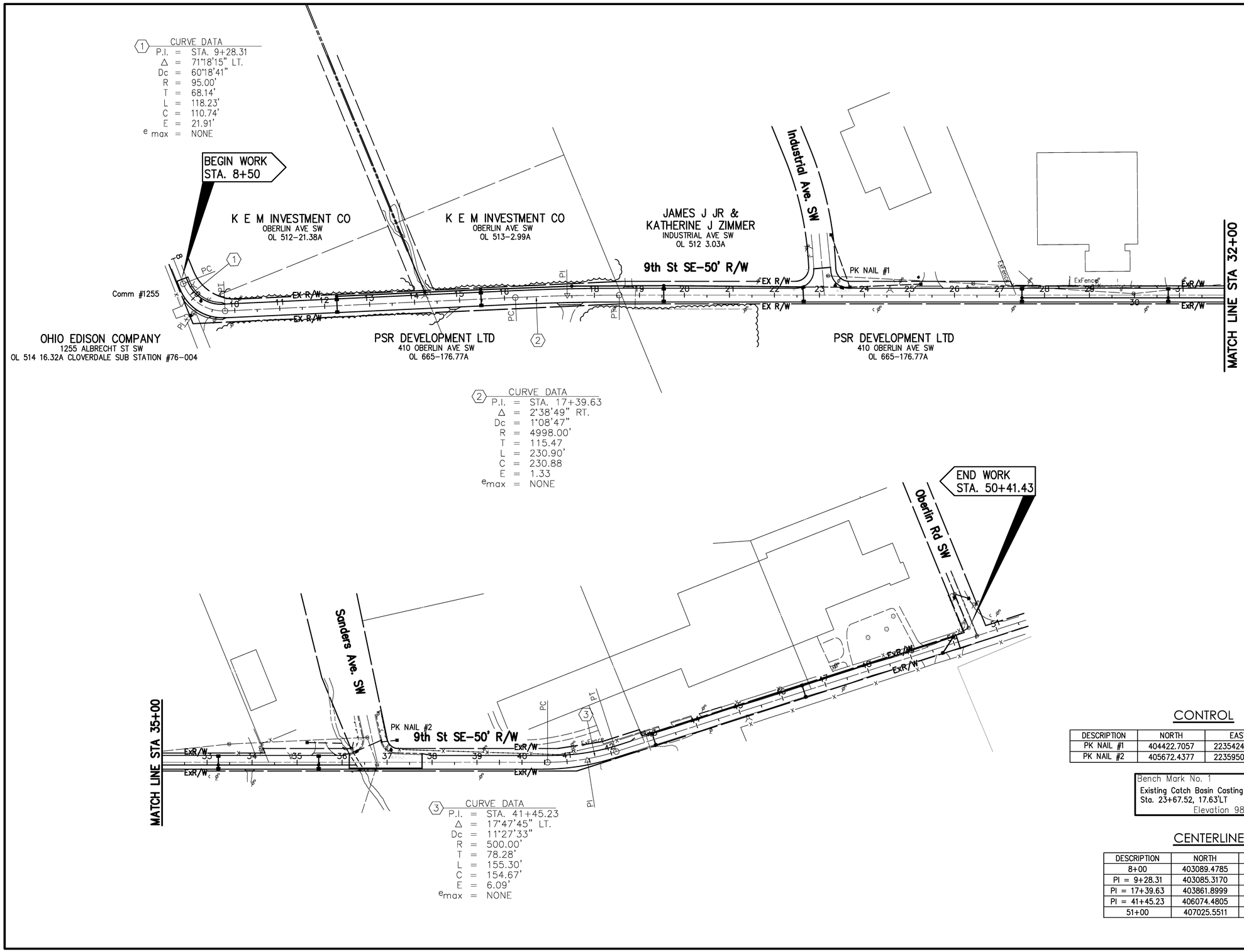

CONTROL

DESCRIPTION	NORTH	EAST	ELEVATION
PK NAIL #1	404422.7057	2235424.0899	
PK NAIL #2	405672.4377	2235950.6539	

Bench Mark No. 1
Existing Catch Basin Casting
Sta. 23+67.52, 17.63'LT
Elevation 980.95

CENTERLINE

DESCRIPTION	NORTH	EAST
8+00	403089.4785	2234777.1716
PI = 9+28.31	403085.3170	2234905.4161
PI = 17+39.63	403861.8999	2235196.6076
PI = 41+45.23	406074.4805	2236140.6251
51+00	407025.5511	2236231.3205

VERTICAL IN FEET 100 50 0

HORIZONTAL SCALE IN FEET 0 50 100

CHECKED BY: KAD
DATE: MAY, 2012
DRAWN BY: FPW
DATE: MAY, 2012

REVISIONS:

DATE	DESCRIPTION

9th St. SW Improvement Project
9th St. SW Schematic Plan
City of Massillon
Stark County, Ohio

Kathy Catazaro-Perry, Mayor
Massillon City of Champions

DRAWING NAME: xxxx.DWG
CITY NUMBER: xxxx.DWG

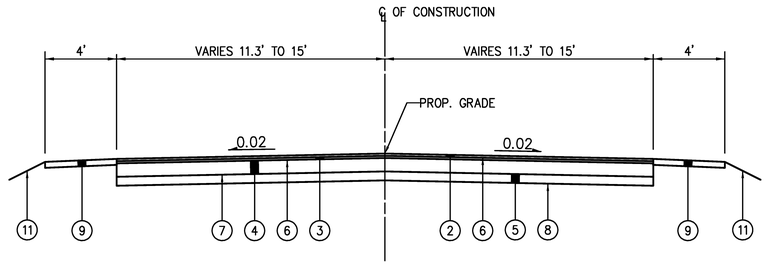

TYPICAL SECTION

9th ST. SW
STA. 8+50 TO STA. 9+80

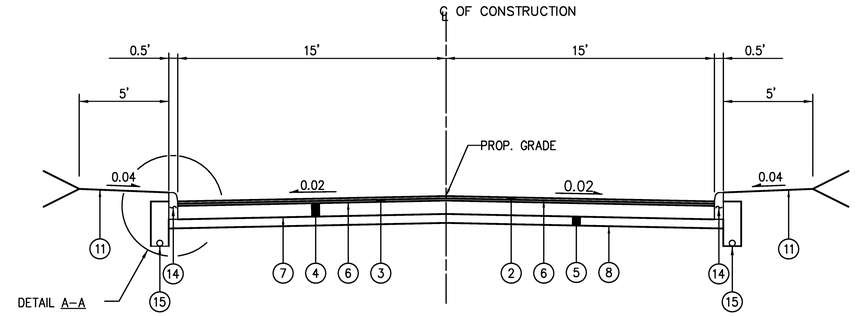

CURBED TYPICAL SECTION

9th ST. SW
STA. 9+80 TO STA. 36+00
STA. 38+00 TO STA. 42+50

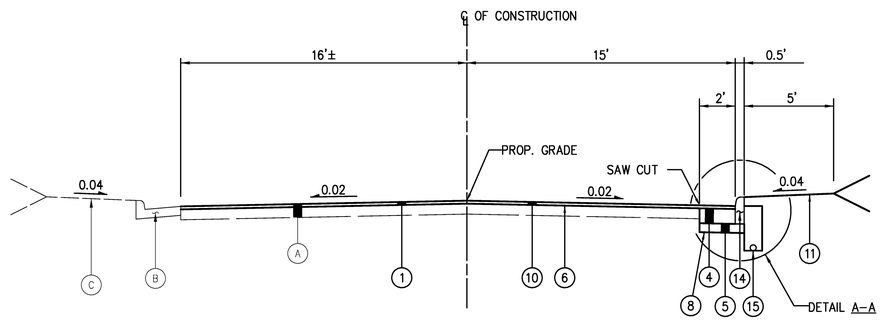

CURBED TYPICAL SECTION

9th ST. SW
STA. 9+80 TO STA. 42+50

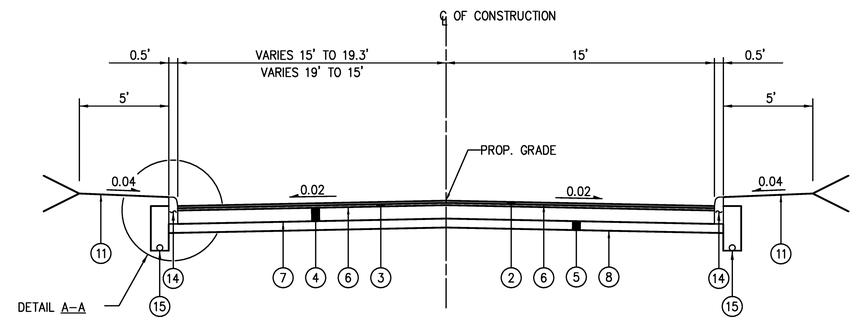

CURBED TYPICAL SECTION

9th ST. SW
STA. 36+00 TO STA. 36+15.95
STA. 37+77.72 TO STA. 38+00

EXISTING LEGEND

- (A) Variable Thickness Asphalt Pavement
- (B) Existing Curb
- (C) Exist Lawn

PROPOSED LEGEND

1. – ITEM 448–2" ASPHALT CONCRETE SURFACE COURSE, TYPE 1, PG 64–22
2. – ITEM 448–1 1/2" ASPHALT CONCRETE SURFACE COURSE, TYPE 1, PG 64–22
3. – ITEM 448–1 1/2" ASPHALT CONCRETE INTERMEDIATE COURSE, TYPE 2, PG 64–28
4. – ITEM 301–9" ASPHALT CONCRETE BASE
5. – ITEM 304–6" AGGREGATE BASE
6. – ITEM 407–TACK COAT
7. – ITEM 408–PRIME COAT
8. – ITEM 204 – SUBGRADE COMPACTION
9. – ITEM 254spec–4" THICK SHOULDER MATERIAL (SHALL CONSIST OF THE PAVEMENT PLANING MATERIAL)
10. – ITEM 254–VARIES PAVEMENT PLANING (2" MAX. TO 0" MIN.)
11. – ITEM 659–SEEDING AND MULCHING
12. – ITEM 209spec–LINEAR GRADING
13. – ITEM 690spec–PAVEMENT REINFORCING FABRIC
14. – ITEM 609–CURB, TYPE 6
15. – ITEM 605–4" SHALLOW PIPE UNDERDRAINS

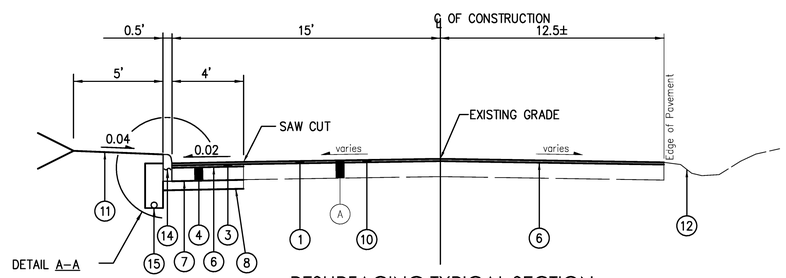

RESURFACING TYPICAL SECTION

STA. 42+50 TO STA. 50+15

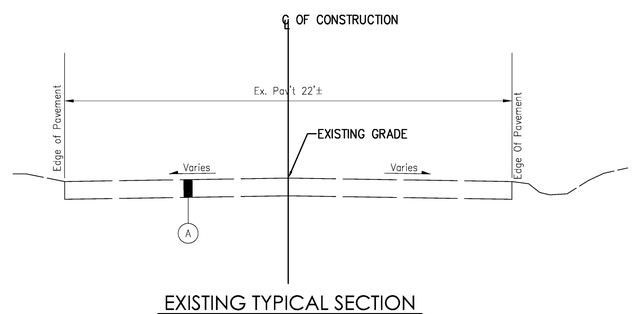

EXISTING TYPICAL SECTION

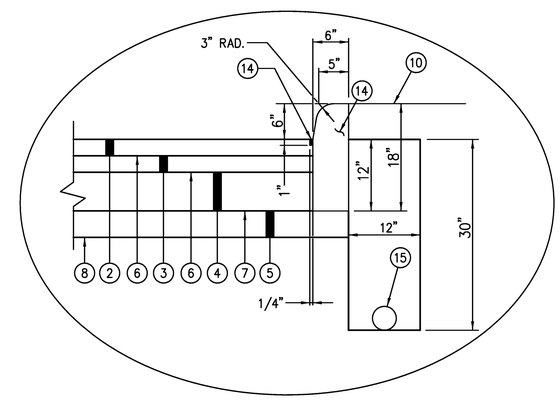

DETAIL A-A

NW NE SW SE N

VERTICAL IN FEET 4 2 0

0 2 4
HORIZONTAL SCALE IN FEET

CHECKED BY: KAD
DATE: MAY, 2014
DRAWN BY: FPW
DATE: MAY, 2014

REVISIONS:

DATE	DESCRIPTION

9th St. SW Improvement Project
Typical Sections
City of Massillon
Stark County, Ohio

Kathy Catazaro-Perry, Mayor
Massillon
City of Champions

DRAWING NAME: SHT3–9thTyyp.DWG
CITY NUMBER: 10ST03

* THE FOLLOWING NOTES ARE CITY OF MASSILLON STANDARD NOTES AND MAY NOT BE APPLICABLE TO ALL PROJECTS.

UTILITIES

LISTED BELOW ARE ALL KNOWN UTILITIES LOCATED WITHIN THE PROJECT CONSTRUCTION LIMITS TOGETHER WITH THEIR RESPECTIVE OWNERS:

AT&T
50 W.BOWERY, 6TH FLOOR
AKRON, OH 44308
800-384-8057

AQUA WATER
P.O. BOX 584
MASSILLON, OH 44648
(330) 833-4156

OHIO EDISON
STARK DIVISION
2600 S. ERIE ST.
MASSILLON, OH 44545
(330) 830-7085

MASSILLON CABLE TV
P.O. BOX 814
MASSILLON, OH 44648
(330) 833-4134

GREAT LAKES
104 6TH ST. S.W.
CANTON, OH 44702
(330) 456-2454

CITY OF MASSILLON
SANITARY SEWER
151 LINCOLN WAY EAST
MASSILLON, OH 44646
(330) 830-1722

AT&T COMMUNICATIONS
2535 E. 40TH AVE.
DENVER, CO 80205-3601
(800) 852-3786

DOMINION EAST OHIO GAS COMPANY
4725 SOUTHWAY ST. S.W.
CANTON, OH 44706
(330) 478-3142

NORTHEAST OHIO NATURAL
GAS CORP.
9081 S.R. 250
STRASBURG, OH 44680-9766
(330) 878-5589

THE CONTRACTOR SHALL NOTIFY ALL UTILITIES 48 HOURS PRIOR TO WORK.

THE LOCATION OF THE UNDERGROUND UTILITIES SHOWN ON THE PLANS ARE SHOWN AT APPROXIMATE LOCATIONS AND WHERE OBTAINED AS REQUIRED FROM THE OWNERS AS REQUIRED BY SECTION 153.64 OF THE OHIO REVISED CODE

OUPS – 1-800-362-2764
OGUPUPS – 1-800-925-0988

DATUM ELEVATION

ALL BENCHMARKS ARE BASED ON REFERENCE BENCHMARKS PROVIDED BY THE CITY OF MASSILLON

STATIONING

ALL STATIONING SHOWN IS REFERENCED TO THE BASELINE AS SHOWN.

NOTIFICATION OF SAFETY FORCES AND BUS GARAGES

THE CONTRACTOR SHALL NOTIFY ALL AGENCY LISTED BELOW AT LEAST 48 HOURS IN ADVANCE OF ANY STREET CLOSING OR TRAFFIC CHANGE.

MASSILLON SAFETY SERVICE 330-830-1702	MASSILLON FIRE DEPARTMENT 330-833-1053	PERRY TOWNSHIP HALL 330-833-2141	NORTH LAWRANCE FIRE DEPT. 330-832-6347
TUSCARAWAS TOWNSHIP HALL 330-832-4337	JACKSON FIRE DEPARTMENT 330-832-1553	MASSILLON POLICE DEPARTMENT 330-830-1735	MASSILLON SCHOOL BUS GARAGE 330-830-1849
JACKSON TOWNSHIP HALL 330-832-7416	PERRY FIRE DEPARTMENT 330-478-5121	JACKSON POLICE DEPARTMENT 330-497-7440	JACKSON SCHOOL BUS GARAGE 330-830-8042
PERRY POLICE DEPARTMENT 330-833-3865	PERRY SCHOOL BUS GARAGE 330-477-1300	STARK COUNTY SHERIFF 330-430-3887	TUSCARAWAS SCHOOL BUS GARAGE 330-837-7805
SARTA 330-454-5333			

SUBSURFACE CONDITIONS

IT IS THE OBLIGATION AND RESPONSIBILITY OF THE CONTRACTOR TO MAKE HIS OWN INVESTIGATION OF SUBSURFACE CONDITIONS PRIOR TO SUBMITTING THEIR BID. PROSPECTIVE BIDDERS ARE TO COORDINATE WITH THE OWNER FOR ACCESS TO THE SITE FOR INSPECTIONS AND EXPLORATORY EXCAVATION. THE BIDDER SHALL CONTACT THE OWNER AT LEAST 72 HOURS IN ADVANCE OF THE DESIRED INSPECTION OR EXCAVATION. THE BIDDER SHALL CONTACT O.U.P.S. AND OBTAIN LOCATIONS OF OTHER UTILITIES.

QUANTITIES

QUANTITIES ARE INDICATED FOR COMPARISON OF BIDS ONLY. IT SHALL BE THE RESPONSIBILITY OF THE CONTRACTOR TO VERIFY QUANTITIES BEFORE ORDERING MATERIALS. VARIATIONS FROM THE PLAN QUANTITIES SHALL BE APPROVED BY THE CITY OF MASSILLON ENGINEER BEFORE MATERIAL ORDERS ARE PLACED. MATERIALS REJECTED DUE TO INCOMPATIBILITY BETWEEN ORDERED QUANTITIES AND FIELD CONDITIONS SHALL BE REPLACED AT THE CONTRACTOR'S EXPENSE.

CONSTRUCTION SPECIFICATIONS & STANDARDS

ALL CONSTRUCTION IS TO BE COMPLETED ACCORDING TO THE CURRENT CITY OF MASSILLON SPECIFICATIONS AND STANDARDS, AND THE LATEST EDITION OF THE STATE OF OHIO DEPARTMENT OF TRANSPORTATION CONSTRUCTION AND MATERIAL SPECIFICATIONS. WHEN A CONFLICT ARISES BETWEEN THE CITY OF MASSILLON AND ODOT'S STANDARDS, THE MORE STRINGENT STANDARD WILL BE USED AT THE DISCRETION OF THE CITY OF MASSILLON ENGINEER. THE CONTRACTOR SHALL FOLLOW ALL OSHA AND ADA REGULATIONS AND REQUIREMENTS.

PRESERVATION OF EXISTING UTILITY SERVICES

ANY EXISTING WATER LINE, SANITARY SEWER, STORM SEWER, GAS LINE OR OTHE UTILITY IN OR OUTSIDE OF THE CONSTRUCTION LIMITS, DAMAGED DURING CONSTRUCTION OF THE PROPOSED PROJECT SHALL BE REPLACED AT THE CONTRACTORS EXPENSE.

CONTRACTOR AVAILABILITY

THE CONTRACTOR SHALL SUPPLY THE ENGINEER WITH A 24 HOUR PHONE NUMBER WHERE THE CONTRACTOR SHALL BE AVAILABLE FOR EMERGENCIES.

PRESERVATION OF PRIVATE PROPERTY

THE CONTRACTOR SHALL PERFORM WORK AS TO NOT DISTURB, DAMAGE OR DESTROY ANY TELEPHONE OR POWER POLES, SIGNS, LANDSCAPING ITEMS, ETC.. ANY ITEM DAMAGED OR DESTROYED SHALL BE REPLACED AT THE CONTRACTOR'S EXPENSE AND ANY ITEM DISTURBED OR IN CONFLICT WITH THE WORK TO BE PERFORMED SHALL BE REMOVED AND RESET AT THE CONTRACTOR'S EXPENSE. PRIOR ENGINEER APPROVAL IS REQUIRED BEFORE ANY OF THE ABOVE ITEMS ARE PERFORMED.

ACCESSIBILITY TO PRIVATE PROPERTY

ACCESS TO ALL DRIVEWAYS AND PARKING AREAS WITHIN THE PROJECT LIMITS SHALL BE MAINTAINED AT ALL TIMES. THE TRENCH SHALL BE BACKFILLED AT THE END OF EACH WORK DAY TO PROVIDE ACCESS. THE CONTRACTOR MUST NOTIFY EACH PROPERTY OWNER AT LEAST 24 HOURS IN ADVANCE OF CUTTING THEIR DRIVEWAY.

WORK LIMITS

THE WORK LIMITS SHOWN ON THESE PLANS ARE FOR PHYSICAL CONSTRUCTION ONLY. THE CONTRACTOR SHALL PROVIDE FOR THE INSTALLATION AND OPERATION OF ALL WORK ZONE TRAFFIC CONTROL AND WORK ZONE TRAFFIC CONTROL DEVICES REQUIRED BY THESE PLANS WHETHER INSIDE OR OUTSIDE THESE WORK LIMITS.

PROFILE AND ALIGNMENT

THE PROPSED PAVEMENT RESURFACING SHALL FOLLOW THE ALIGNMENT AND PROFILE OF THE EXISTING PAVEMENT. THE PROPOSED ASPHALT CONCRETE OVERLAY SHALL BE AS SHOWN ON THE TYPICAL SECTIONS.

GRADING AND FILLING OPERATIONS

THE PLACEMENT OF COMPACTED AGGREGATE SHALL NOT EXTEND PAST THE EXISTING GRADED SHOULDERS. NO EXCAVATION, GRADING, OR FILLING OPERATIONS SHALL BE PERFORMED IN ANY WETLANDS OR STREAMS, UNLESS THE REQUIRED STATE AND/OR FEDERAL PERMITS HAVE BEEN OBTAINED IN ACCORDANCE WITH ALL APPLICABLE STATE AND/OR FEDERAL LAWS AND REGULATIONS. UNDER NO CIRCUMSTANCES SHALL THE CONTRACTOR STORE EQUIPMENT AND/OR MATERIALS IN ANY WETLANDS OR STREAMS.

CLEARING AND GRUBBING

ALTHOUGH THERE ARE NO TREES OR STUMPS SPECIFICALLY MARKED FOR REMOVAL WITHIN THE LIMITS OF THE PROJECT. A LUMP SUM QUANTITY HAS BEEN INCLUDED IN THE BID FORM FOR ITEM201SPEC, CLEARING AND GRUBBING. THIS ITEM SHALL INCLUDE ALL PROVISIONS AS SET FORTH IN THE 2008 ODOT SPECIFICATIONS. REMOVAL ITEMS MAY INCLUDE TREES, STUMPS, AND BRUSH AS DETERMINED BY THE CITY ENGINEER.

ALL PROVISIONS AS SET FORTH IN THE SPECIFICATIONS UNDER THIS ITEM SHALL BE INCLUDED IN THE LUMP SUM PRICE BID FOR ITEM 201SPEC, CLEARING AND GRUBBING.

PRESERVATION OF PROPERTY CORNERS AND SURVEY MARKERS

THE CONTRACTOR SHALL PRESERVE ALL CORNERSTONES, IRON PINS, CONCRETE MONUMENTS AND ANY TYPE OF LAND MONUMENT. HE SHALL HAVE ALL LAND MONUMENTS IN THE PROXIMITY OF THE WORK REFERENCED. HE SHALL REPLACE DESTROYED OR DAMAGED MONUMENTS AND SHAL FURNISH A CERTIFICATION BY AN OHIO REGISTERED SURVEYOR THAT THE MONUMENTS HAVE BEEN RESTORED.

REMOVAL AND RELOCATION OF EXISTING UTILITIES

THE CONTRACTOR IS REQUIRED TO COOPERATE WITH EACH RESPECTIVE UTILITY OWNER FOR THE REMOVAL AND RELOCATION OF ANY AND ALL UTILITIES THAT CREATE A CONFLICT WITH CONSTRUCTION OF THE PROJECT.

CROSSING OR CONNECTING TO EXISTING PIPES AND UTILITIES

WHERE THE PLANS PROVIDE FOR A PROPOSED CONDUIT TO BE CONNECTED TO, OR CROSS OVER OR UNDER AN EXISTING SEWER OR UNDERGROUND UTILITY, THE CONTRACTOR SHALL LOCATE THE EXISTING PIPES OR UTILITIES BOTH AS TO LINE AND GRADE BEFORE STARTING TO LAY THE PROPOSED CONDUIT.

IF IT IS DETERMINED THAT THE ELEVATION OF THE EXISTING CONDUIT, OR EXISTING APPURTENANCE TO BE CONNECTED, DIFFERS FROM THE PLAN ELEVATION OR RESULTS IN A CHANGE IN THE PLAN CONDUIT SLOPE, THE CITY OF MASSILLON ENGINEER SHALL BE NOTIFIED BEFORE STARTING CONSTRUCTION OF ANY PORTION OF THE PROPOSED CONDUIT WHICH WILL BE AFFECTED BY THE VARIANCE IN THE EXISTING ELEVATIONS.

PAYMENT FOR THE OPERATIONS DESCRIBED ABOVE SHALL BE INCLUDED IN THE CONTRACT PRICE FOR THE PERTINENT 603 CONDUIT ITEM.

REVIEW OF SANITARY AND DRAINAGE FACILITIES

AN INSPECTION OF ALL EXISTING SEWERS WHICH ARE TO REMAIN IN SERVICE AND WHICH MAY BE AFFECTED BY THE WORK SHALL BE COMPLETED BEFORE AND AFTER WORK HAS COMMENCED. FINAL ACCEPTANCE BY THE CITY OF MASSILLON WILL NOT OCCUR UNTIL AFTER SAID INSPECTION. THE CONDITION OF THE EXISTING CONDUITS AND THEIR APPURTENANCES SHALL BE DETERMINED FROM FIELD OBSERVATIONS. RECORDS OF THE OBSERVATIONS SHALL BE PROVIDED IN WRITING BY THE CONTRACTOR TO THE CITY OF MASSILLON.

ALL NEW CONDUITS, INLETS, CATCH BASINS, AND MANHOLES CONSTRUCTED AS A PART OF THE PROJECT SHALL BE FREE OF ALL FOREIGN MATTER AND IN A CLEAN CONDITION BEFORE THE PROJECT WILL BE ACCEPTED BT THE CITY OF MASSILLON.

ALL EXISTING SEWERS INSPECTED INITIALLY BY THE ABOVE MENTIONED PARTIES SHALL BE MAINTAINED AND LEFT IN A CONDITION REASONABLY COMPARABLE TO THAT DETERMINED BY THE ORIGINAL INSPECTION. ANY CHANGE IN THE CONDITION RESULTING FROM THE CONTRACTOR'S OPERATIONS SHALL BE CORRECTED BY THE CONTRACTOR TO THE SATISFACTION OF THE ENGINEER.

PAYMENT FOR ALL OPERATIONS DESCRIBED ABOVE SHALL BE INCLUDED IN THE CONTRACT PRICE FOR THE PERTINENT 603 CONDUIT ITEMS.

ITEM 407. TACK COAT

THE RATE OF APPLICATION OF THE 407 TACK COAT SHALL BE SUBJECT TO ADJUSTMENT AS DIRECTED BY THE ENGINEER. QUANTITIES INDICATE AN AVERAGE APPLICATION RATE OF 0.08 GALLONS PER SQUARE YARD OF TACK COAT FOR ESTIMATING PURPOSES ONLY.

ITEM 408. BITUMINOUS PRIME COAT

THE RATE OF APPLICATION OF THE 408 PRIME COAT SHALL BE SUBJECT TO ADJUSTMENT AS DIRECTED BY THE ENGINEER. QUANTITIES INDICATE AN AVERAGE APPLICATION RATE OF 0.40 GALLONS PER SQUARE YARD OF PRIME COAT FOR ESTIMATING PURPOSES ONLY.

ITEM 659. TOPSOIL, SEEDING AND MULCHING

ITEM 659 SHALL BE APPLIED TO ALL EXPOSED SOIL AREAS DISTURBED DURING CONSTRUCTION. SUCH AS SPECIFIED IN ITEM 659 AND IS NOT LIMITED TO JUST TOPSOIL, SEEDING AND MULCHING.

THE CITY SHALL APPROVE SEED MIX PRIOR TO APPLICATION TO BE USED THROUGHOUT CONSTRUCTION LIMITS.

ITEM 603SPEC – PIPE CLEANOUT

THIS WORK SHALL CONSIST OF REMOVING SEDIMENT AND DEBRIS FROM THE EXISTING CONDUITS SPECIFIED IN THE FIELD. ALL MATERIAL REMOVED SHALL BE DISPOSED OF AS PER 203.05. ALL SEWERS SHALL BE CLEANED OUT TO THE SATISFACTION OF THE ENGINEER.

CLEANOUT OF THE PIPE SHALL BE PAID FOR AT THE UNIT PRICE BID FOR ITEM SPECIAL – PIPE CLEANOUT. THIS PRICE SHALL INCLUDE THE COST FOR MATERIAL, EQUIPMENT, LABOR, AND ALL INCIDENTALS REQUIRED TO COMPLETE THE CLEANOUT.

THE FOLLOWING ESTIMATE QUANTITIES HAVE BEEN INCLUDED IN THE GENERAL SUMMARY FOR THE ABOVE NOTED WORK:

603SPEC, PIPE CLEANOUT 250 L.F.

CONDITIONS OF WORK

ALL WORK PERFORMED UNDER THIS CONTRACT SHALL COMPLY WITH THE U.S. DEPARTMENT OF LABOR, OCCUPATIONAL SAFETY AND HEALTH ACT, STATE, COUNTY, AND CITY OF MASSILLON LAWS AND REGULATIONS. ALL WORK, AT ALL TIMES SHALL BE SUBJECT TO OBSERVATION BY THE CITY OF MASSILLON ENGINEER AND/OR HIS REPRESENTATIVE. ALL WORK SHALL COMPLY WITH THE CONDITIONS OF THE CONTRACT DOCUMENTS AND OHIO EPA, AND STANDARDS OF THE CITY OF MASSILLON. ALL ELECTRICAL WORK SHALL COMPLY WITH THE NATIONAL ELECTRICAL CODE, AND APPLICABLE CITY, COUNTY, STATE AND FEDERAL CODES.

IT SHALL BE THE RESPONSIBILITY OF THE CONTRACTOR TO MAINTAIN SAFE AND SATISFACTORY ACCESS TO ALL ABUTTING PROPERTIES TO THE PROJECT SITE. ADJACENT ROADS SHALL BE MAINTAINED AND KEPT CLEAN OF MUD AND OTHER DEBRIS THAT MAY BE CAUSED BY TRAFFIC EXITING THE WORK SITE. THE CONTRACTOR SHALL COORDINATE AND PROVIDE FOR ALL NECESSARY TRAFFIC CONTROL. TRAFFIC CONTROL SHALL FOLLOW THE MORE STRINGENT GUIDELINES OF THE CITY OF MASSILLON OR ODOT AT THE DESCREATION OF THE CITY OF MASSILLON ENGINEER.

IT SHALL BE THE RESPONSIBILITY OF THE CONTRACTOR TO PROVIDE AND MAINTAIN FACILITIES FOR A CONSTRUCTION OFFICE, EMPLOYEE PARKING, AND EMPLOYEE SANITARY FACILITIES. ON STREET PARKING WILL NOT BE PERMITTED. THE CONTRACTOR SHALL PROVIDE FOR THE LAWFUL OFF-SITE DISPOSAL OF DEMOLITION DEBRIS AND CONSTRUCTION WASTE.

NW NE SW SE N

VERTICAL IN FEET 1 0.5 0

0 0.5 1
HORIZONTAL SCALE IN FEET

CHECKED BY: KAD
DATE: MAY, 2012
DRAWN BY: FPW
DATE: MAY, 2012

REVISIONS:

DATE	DESCRIPTION

9th St SW Improvement Project
Genral Notes
City of Massillon
Stark County, Ohio

Kathy Catazaro-Perry, Mayor
Massillon
City of Champions

DRAWING NAME: SHT1-9thgn1.DWG
CITY NUMBER: 09st01

CONTRACTOR AVAILABILITY

THE CONTRACTOR SHALL SUPPLY THE ENGINEER WITH A 24 HOUR PHONE NUMBER WHERE THE CONTRACTOR SHALL BE AVAILABLE FOR EMERGENCIES.

RESTORATION

FOR SANITARY SEWER INSTALLED, TESTED, AND ACCEPTED UP TO MAY 15TH OF ANY CALENDAR YEAR, RESTORATION SHALL BE COMPLETE BY JUNE 30th OF THAT YEAR. FOR INSTALLATION OF SANITARY SEWER TESTED AND ACCEPTED FROM MAY 15th TO SEPTEMBER 30th OF ANY CALANDAR, YEAR RESTORATION SHALL BE COMPLETE BY NOVEMBER 15th OF THAT CALENDAR YEAR. FOR SANITARY SEWER INSTALLED, TESTED, AND ACCEPTED AFTER NOVEMBER 15TH OF ANY CALENDAR YEAR. RESTORATION SHALL BE COMPLETE BY MAY 15th OF THE NEXT CALENDAR YEAR.

ALL SOIL AREAS DISTURBED BY THE CONTRACTOR SHALL BE TOPSOILED, SEEDED AND MULCHED. COST TO BE INCLUDED IN THE UNIT PRICE BID FOR EACH ITEM OF AFFECTED WORK. TOPSOIL, SEEDING AND MULCHING SHALL NOT BE A SEPARATE PAY ITEM. THIS INCLUDES BACKFILLING, SEEDING AND MULCHING ALONG THE EDGE OF ALL PAVEMENT RESTORATION.

CONTRACTOR TO REPLACE ALL PAVEMENT MARKINGS. COST TO BE INCLUDED IN THE UNIT PRICE BID FOR PAVEMENT.

CONTRACTOR TO USE HOT APPLIED JOINT CRACK SEALER ON ASPHALT PAVEMENT AT ALL ENDS AND INTERSECTIONS.

REMOVAL AND RELOCATION OF EXISTING UTILITIES

THE CONTRACTOR IS REQUIRED TO COOPERATE WITH EACH RESPECTIVE UTILITY OWNER FOR THE REMOVAL AND RELOCATION OF ANY AND ALL UTILITIES THAT CREATE A CONFLICT WITH CONSTRUCTION OF THE PROJECT.

ITEM 623. CONSTRUCTION STAKING

CONTRACTOR IS RESPONSIBLE FOR ALL CONSTRUCTION LAYOUT. THIS WORK IS TO BE PAID UNDER ITEM 623 CONSTRUCTION STAKING.

EXISTING DATA

EACH CONTRACTOR SHALL VISIT THE SITE PERSONALLY TO ASCERTAIN THE NATURE OF THE WORK AND BECOME THOROUGHLY FAMILIARIZED WITH THE SITE PRIOR TO BID SUBMISSION.

EXISTING STRUCTURES, GRADES, PIPING, ETC. ARE INDICATED IN APPROXIMATE LOCATION ON THE PLAN. INFORMATION SHOWN IS NOT GUARANTEED TO BE CORRECT AND COMPLETE. THE DATA SHALL BE VERIFIED IN THE FIELD BY THE CONTRACTOR. THE EXISTENCE OF FACILITIES ABOVE OR BELOW GROUND, WHICH MAY NOT BE SHOWN, WILL NOT BE A BASIS FOR A CLAIM FOR EXTRA WORK.

EXISTING UNDERGROUND UTILITIES SHOWN ARE RECORDS PROVIDED BY UTILITY COMPANIES AND ARE APPROXIMATE ONLY. SERVICE LATERALS ARE NOT SHOWN.

IT IS THE RESPONSIBILITY OF CONTRACTOR TO NOTIFY THE CITY, PRIOR TO BID OPENING OF NON-CONFORMING OR CONFLICTING INFORMATION.

EXCAVATED MATERIAL

ALL EXCAVATED MATERIAL AND ALL MATERIAL USED IN CONSTRUCTION OF THE WORK SHALL BE PILED AND STORED IN A MANNER THAT WILL NOT ENDANGER THE WORK AND THAT WILL LEAVE DRIVEWAYS OR OTHER CONTROLS UNOBSTRUCTED AND ACCESSIBLE WHILE THE WORK IS TO BE COMPLETED. SATISFACTORY PROVISIONS SHALL BE MADE FOR STREET DRAINAGE, AND NATURAL WATERCOURSES SHALL NOT BE OBSTRUCTED. DURING THE PROGRESS OF THE WORK, ALL MATERIAL PILES SHALL BE KEPT TRIMMED UP AND MAINTAINED IN A NEAT MANNER. ALL EXCAVATED WASTE MATERIAL SHALL BE REMOVED FROM THE PROJECT SITE, AS DIRECTED BY THE ENGINEER. THE WASTE SITE IS TO BE PROVIDED BY THE CONTRACTOR AT NO COST TO THE CITY, UNLESS OTHERWISE NOTED IN THE SPECIFICATIONS ALONG WITH A LETTER FROM THE PROPOSED WASTE SITE OWNER SITE, AS DIRECTED BY THE ENGINEER. THE WASTE SITE IS TO BE PROVIDED BY THE CONTRACTOR AT NO COST TO THE CITY, PERMITTING SUCH AND HOLDING THE CITY HARMLESS.

DOWN SPOUTS

ALL DOWN SPOUTS UNABLE TO BE CONNECTED TO THE STORM LATERAL SHALL BE CORE DRILLED THROUGH THE CURB AS PER ENGINEER'S DIRECTION.

CURB OPENING SHALL NOT GREATER THAN A 3 1/2" DIAMETER.

THE WORK ABOVE SHALL BE INCLUDED IN THE CONTRACT PRICE FOR ITEM 609.

WORKING AREA

NO EXCAVATION WITH SIDE SLOPES STEEPER THAN 2:1 AND/OR DEEPER THAN 2' WILL BE PERMITTED. OPEN CASTINGS AND PIPES SHALL BE LEFT SECURED WHEN THE SITE IS UNATTENDED BY THE CONTRACTOR. THE CONTRACTOR SHALL SECURE ALL SUCH EXCAVATIONS, OPEN CASTINGS AND PIPES AGAINST UNAUTHORIZED ENTRY COVERING WITH STEEL PLATES, TEMPORARY BACK FILLING, FENCING AND SECURITY SERVICES SHALL BE INCLUDED IN THE PRICE BID FOR THE WORK.

ITEM 207SPEC EROSION CONTROL

THE CONTRACTOR SHALL PREPARE AND SUBMIT A STORM WATER POLLUTION CONTROL PLAN TO THE CITY OF MASSILLON ENGINEER TO BE FORWARDED TO THE APPROPRIATE PERMITTING AGENCIES. SAID PLAN MUST COMPLY WITH THE MOST CURRENT RULES AND REGULATIONS OF THE CITY OF MASSILLON.

THE CONTRACTOR SHALL BE RESPONSIBLE FOR CONSTRUCTING AND MAINTAINING STORM WATER POLLUTION CONTROL PLAN 24 HOURS A DAY FOR THE DURATION OF THIS PROJECT. ALL DEVICES (SILT FENCE, INLET PROTECTION, ROCK CHANNEL, ETC.) SHALL BE FURNISHED, ERECTED, MAINTAINED, AND REMOVED BY THE CONTRACTOR.

THIS WORK SHALL BE INCLUDED IN THE LUMP SUM PRICE FOR ITEM 207SPEC – EROSION CONTROL

CONDITIONS OF WORK

ALL WORK PERFORMED UNDER THIS CONTRACT SHALL COMPLY WITH THE U.S. DEPARTMENT OF LABOR, OCCUPATIONAL SAFETY AND HEALTH ACT, STATE, COUNTY, AND CITY OF MASSILLON LAWS AND REGULATIONS. ALL WORK, AT ALL TIMES SHALL BE SUBJECT TO OBSERVATION BY THE OWNER AND/OR ENGINEER. ALL WORK SHALL COMPLY WITH THE CONDITIONS OF THE CONTRACT DOCUMENTS, OHIO EPA, AND STANDARDS OF THE CITY OF MASSILLON. ALL ELECTRICAL WORK SHALL COMPLY WITH THE NATIONAL ELECTRICAL CODE, AND APPLICABLE CITY, COUNTY, STATE AND FEDERAL CODES.

IT SHALL BE THE RESPONSIBILITY OF THE CONTRACTOR TO MAINTAIN SAFE AND SATISFACTORY ACCESS TO ALL ABUTTING PROPERTIES TO THE PROJECT SITE. ADJACENT ROADS SHALL BE MAINTAINED AND KEPT CLEAN OF MUD AND OTHER DEBRIS THAT MAY BE CAUSED BY TRAFFIC EXITING THE WORK SITE. THE CONTRACTOR SHALL COORDINATE AND PROVIDE FOR ALL NECESSARY TRAFFIC CONTROL. TRAFFIC CONTROL SHALL BE IN ACCORDANCE WITH CURRENT CITY OF MASSILLON RULES AND REGULATIONS AND THE OHIO MANUAL OF UNIFORM TRAFFIC CONTROL DEVICES.

IT SHALL BE THE RESPONSIBILITY OF THE CONTRACTOR TO PROVIDE AND MAINTAIN FACILITIES FOR A CONSTRUCTION OFFICE, EMPLOYEE PARKING, AND EMPLOYEE SANITARY FACILITIES. ON STREET PARKING WILL NOT BE PERMITTED. THE CONTRACTOR SHALL PROVIDE FOR THE LAWFUL OFF-SITE DISPOSAL OF DEMOLITION DEBRIS AND CONSTRUCTION WASTE.

REMOVAL OF TREES OR STUMPS

ALL TREES AND STUMPS REMOVED DURING CONSTRUCTION SHALL BE UNDER THE LUMP SUM BID FOR ITEM 201, CLEARING AND GRUBBING. THIS SHALL INCLUDE ALL TREES AND STUMPS WITHIN THE CONSTRUCTION LIMITS UNLESS OTHERWISE STATED BY CITY REPRESENTATIVE.

CONCRETE REMOVAL

ALL EXISTING CONCRETE INCLUDING CURBS, DRIVES, AND BASE ETC. WITHIN WORK LIMITS SHALL BE REMOVED AND PAID FOR UNDER:

ITEM 203 EXCAVATION INCLUDING ROADWAY

ITEM 614SPEC MAINTAINING TRAFFIC

THE CONTRACTOR SHALL BE RESPONSIBLE FOR DESIGNING AND MAINTAINING SAFE AND EFFECTIVE TRAFFIC CONTROL 24 HOURS A DAY FOR THE DURATION OF THIS PROJECT. ALL TRAFFIC CONTROL DEVICES (PAVEMENT MARKINGS, SIGNS, BARRELS, CONES, ETC.) SHALL BE FURNISHED, ERECTED, MAINTAINED, AND REMOVED BY THE CONTRACTOR.

THE CONTRACTOR SHALL DEVISE A MAINTENANCE OF TRAFFIC SCHEME WHICH SHALL BE STAMPED BY A PROFESSIONAL ENGINEER, AND PRESENT IT TO THE ENGINEER FOR APPROVAL. THE MAINTENANCE OF TRAFFIC SCHEME SHALL PRESENT, IN GENERAL, THE METHOD FOR CONDUCTING THE REQUIRED WORK IN A SAFE AND EFFICIENT MANNER.

THE PLANS SHALL INCLUDE THE FOLLOWING COMPONENTS:

PLAN VIEW AT AN APPROPRIATE SCALE TO SHOW:
- WORK AREA
- BEGIN/END STATIONING OF TAPERS, TEMPORARY MARKINGS, ETC.
- TEMPORARY PAVEMENT
- LOCATIONS OF SIGNS (EXISTING OVERHEAD SIGNS AND ALL PROPOSED, COVERED, OR MODIFIED SIGNS)
- LOCATIONS OF TYPICAL SECTIONS
- REFERENCES TO APPLICABLE STANDARD DRAWINGS

TYPICAL SECTIONS SHOWING:
- LANE WIDTHS, PAVEMENT MARKINGS, DRUMS, PCB, ETC.
- LIMITING STATIONS
- WORK AREA AND DROP-OFFS

SIGN DETAILS FOR PROPOSED SIGNS AND OVERLAYS/MODIFICATIONS

THE MAINTENANCE OF TRAFFIC SCHEME SHALL BE IN CONFORMANCE WITH THE OHIO MANUAL OF UNIFORM TRAFFIC CONTROL DEVICES, LATEST REVISION, THE REFERENCED STANDARD CONSTRUCTION DRAWINGS INCLUDING DESIGNER NOTES, THE CONSTRUCTION AND MATERIAL SPECIFICATIONS (CMS), POLICY NO. 516-003(P) TRAFFIC MANAGEMENT IN WORK ZONES INTERSTATE AND OTHER FREEWAYS, ODOT LOCATION AND DESIGN MANUAL, VOLUME 1, AND ALL REQUIREMENTS DETAILED IN THESE PLANS.

THIS SUBMITTAL SHALL CONSIST OF THREE (3) COPIES OF THE PLANS FOR REVIEW AND DISTRIBUTION. NO WORK SHALL BEGIN AT THE LOCATION UNTIL THE MAINTENANCE OF TRAFFIC PLANS HAVE BEEN APPROVED BY THE CITY OF MASSILLON ENGINEER.

THE PROGRESS SCHEDULE WILL BE REQUIRED TO APPROVE THE MAINTENANCE OF TRAFFIC PLANS. THIS SCHEDULE OF OPERATIONS SHALL DETAIL THE CONTRACTOR'S WORK ACTIVITIES AND HIS METHODS OF MAINTAING TRAFFIC DURING THESE ACTIVITIES. MAINTENANCE OF TRAFFIC PLANS SHALL BE PREPARED AND SUBMITTED TO THE CITY OF MASSILLON ENGINEER FOR APPROVAL. THESE PLANS SHALL BE SEALED BY A REGISTERED PRFESSIONAL ENGINEER. THE CITY SHALL HAVE 14 CALENDAR DAYS TO REVIEW AND COMMENT ON THESE PLANS. THE CONTRACTOR SHALL NOT BEGIN ANY WORK REQUIRING TRAFFIC CONTROL UNTIL THE ENGINEER HAS GIVEN APPROVAL OF THE CONTRACTOR'S SEQUENCE OF OPERATIONS AND MAINTENANCE OF TRAFFIC PLANS.

THE MAINTENANCE OF TRAFFIC SCHEME SHALL TAKE INTO CONSIDERATION SNOW AND ICE OPERATIONS FROM DECEMBER 1 THROUGH MARCH 31. LANE SHIFTS, RESTRICTIONS, AND CLOSURES MAY NOT BE APPROVED IF THEY ADVERSELY AFFECT SNOW REMOVAL OPERATIONS.

THIS WORK SHALL BE INCLUDED IN THE LUMP SUM PRICE FOR ITEM 614 – MAINTAINING TRAFFIC, AS PER PLAN.

ITEM 651. TOPSOIL STOCKPILED

THE MATERIAL FOR THIS ITEM SHALL BE OBTAINED FROM AREAS WITHIN THE PROPOSED RIGHT-OF-WAY.

PROVISION OF THIS 651 ITEM SHALL NOT BE CONSTRUED AS A WAIVER OF THE PROVISIONS OF 201.4 SOD AND INCIDENTAL TOPSOIL REMOVED ELSEWHERE ON THIS PROJECT FOR SALVAGE AND FOR USE AS DESCRIBED IN 203.04(e). THIS ITEM SHALL BE INCLUDED IN THE CONTRACT PRICE FOR VARIOUS 203 ITEMS.

PRESERVATION OF EXISTING UTILITY SERVICES

ANY EXISTING WATER LINE, SANITARY SEWER, STORM SEWER, GAS LINE OR OTHER UTILITY IN OR OUTSIDE OF THE CONSTRUCTION LIMITS, DAMAGED DURING CONSTRUCTION OF THE PROPOSED PROJECT, WILL BE REPLACED AT THAT CONTRACTORS EXPENSE.

MANHOLES, CATCH BASINS, INLETS AND PIPES REMOVED OR ABANDONED

ALL CASTING, PRE-CAST STRUCTURES AND PIPES SHALL BE CAREFULLY REMOVED AND STORED WITHIN THE RIGHT-OF-WAY FOR SALVAGE BY THE CITY. CONTACT THE CITY OF MASSILLON STREET SUPERINTENDENT – 330-833-5746. ANY UNWANTED MATERIALS SHALL BE DISPOSED OF BY THE CONTRACTOR.

PAYMENT FOR ALL OF THE ABOVE SHALL BE INCLUDED IN THE CONTRACT PRICE FOR THE PERTINENT 202 ITEM.

ITEM 609. CAST IN PLACE 6"X18" CONCRETE CURB

GRANULAR BEDDING, BACKFILLING AND CONCRETE CURB PLACEMENT ALONG WITH ALL APPURTENANCES IS TO BE INCLUDED IN ITEM 609. THIS SHALL ALSO INCLUDE THE REPLACEMENT AND REMOVAL OF ALL WALK EXTENTSION DISTURB DO TO CURB PLACEMENT

RESIDENTIAL AND COMMERCIAL DRAINAGE CONNECTIONS

EACH LOT SHALL BE SUPPLIED WITH A SINGLE 10" STORM LATERAL THAT WILL BE INSTALLED FROM THE MAIN TO THE PROPERTY LINE, SAID STORM LATERAL SHALL BE CONNECTED TO FOUNDATION DRAINS, SUMP DRAIN AND WHEN POSSIBLE AS PER ENGINEER'S DIRECTION THE DOWN SPOUT WILL BE CONNECTED.

THE FOLLOWING WORK SHALL BE PAID FOR UNDER ITEM 603 10" STORM LATERAL.

ITEM SPECIAL – FILL AND PLUG EXISTING CONDUIT

THIS ITEM SHALL CONSIST OF THE CONSTRUCTION OF BULKHEADS IN AN EXISTING CONDUIT AND FILLING THE AREA THUS SEALED OFF WITH LEANOR CLEAN GROUT, ITEM 613, SAND OR OTHER MATERIAL APPROVED BY THE ENGINEER.

BULKHEADS SHALL BE LOCATED AT THE LIMITS OF THE AREA TO BE FILLED AS INDICATED ON THE PLANS. THE BULKHEADS SHALL CONSIST OF BRICK OR CONCRETE MASONRY WITH A MINIMUM THICKNESS OF 12 INCHES.

THE FILL MATERIAL SHALL BE PUMPED INTO PLACE, OR PLACED BY OTHER MEANS APPROVED BY THE ENGINEER. SO THAT, AFTER SETTLEMENT,

AT LEAST 90 PERCENT OF THE CROSS-SECTIONAL AREA OF THE CONDUIT, FOR ITS ENTIRE LENGTH, SHALL BE FILLED. THE LENGTH OF FILLED AND PLUGGED CONDUIT TO BE PAID FOR SHALL BE THE ACTUAL NUMBER OF LINEAR FEET (MEASURED ALONG THE CENTERLINE OF EACH CONDUIT FROM OUTER FACE TO OUTER FACE OF BULKHEADS) FILLED AND PLUGGED AS DESCRIBED ABOVE.

IN LIEU OF FILLING AND PLUGGING THE EXISTING CONDUIT, THE PIPE MAY BE CRUSHED AND BACKFILLED IN ACCORDANCE WITH THE PROVISIONS OF 203, OR IT MAY BE REMOVED.

THE LENGTH, MEASURED AS PROVIDED ABOVE, SHALL BE PAID FOR AT THE CONTRACT PRICE PER LINEAR FOOT FOR, ITEM SPECIAL, FILL AND PLUG EXISTING CONDUIT.

FINAL APPROVAL

A VIDEO IN THE FORM OF DVD WILL BE MADE BY THE CONTRACTOR AND SUBMITTED TO THE CITY OF MASSILLON ENGINEER PRIOR TO THE PROJECT COMMENCING. AFTER THE FINAL INVOICE IS SUBMITTED THE SITE SHALL BE VIDEOED AGAIN BY THE CONTRACTOR. ANY DISCREPANCIES WILL BE RESOLVED PRIOR TO FINAL PAYMENT. AS BUILT DRAWINGS SHALL BE CREATED BY THE CONTRACTOR AND SUBMITTED TO THE CITY OF MASSILLON ENGINEER IN A CLEAR AND LEGENDABLE MANNER PRIOR TO FINAL INVOICE.

COST OF THIS WORK SHALL BE INCLUDED IN ITEM 623 CONSTRUCTION STAKING

NW NE N SW SE

VERTICAL IN FEET 1 0.5 0

0 0.5 1
HORIZONTAL SCALE IN FEET

CHECKED BY: KAD
DATE: MAY, 2012
DRAWN BY: FPW
DATE: MAY, 2012

REVISIONS:

DATE	DESCRIPTION

9th St SW Improvement Project
Genral Notes
City of Massillon
Stark County, Ohio

Kathy Catazaro-Perry, Mayor
Massillon
City of Champions

DRAWING NAME: SHT1-9thgn2.DWG
CITY NUMBER: 09st01

GENERAL SUMMARY

SHEET No. 4	6	7	8	9	10	11	12	13	14	15	16	17	35	36	37		ITEM	GRAND TOTAL	UNIT	DESCRIPTION
																				ROADWAY
LUMP																	201SPEC	LUMP	LUMP	CLEARING AND GRUBBING
					32						43						202	75	LF	PIPE REMOVED
											1						202	1	EACH	CATCH BASIN REMOVED
												7068					203	6078	CY	ROADWAY EXCAVATION
												704					203	704	CY	EMBANKMENT
															600		203SPEC	600	LF	DITCH GRADING
																	204	12120	SY	SUBGRADE COMPACTION
																	204	4	HOURS	EMBANKMENT
																				DRAINAGE
		36	232	36	33	30	60	30	378	378	72						603	1285	LF	12" TYPE B CONDUIT
					15												603	15	LF	15" TYPE B CONDUIT
			328	513													603	841	LF	18" TYPE B CONDUIT
						325	473	85							100		603	983	LF	24" TYPE B CONDUIT
250																	603SPEC	250	LF	PIPE CLEANOUT
		1							1	1	1						604	4	EACH	CATCH BASIN TYPE MASS V5622
																	604	2	EACH	CATCH BASIN TYPE MASS V5630
		2	1	1	3	2	4	2	1	1	1						604	18	EACH	CATCH BASIN MASS7030
															1		604	1	EACH	HEADWALL TYPE: HW 2.1
			2	2		1	2	1									604	6	EACH	DRAINAGE MANHOLE MASS1048
											1						604	1	EACH	DRAINAGE MANHOLE MASS1048-R
	7202																605	7202	LF	4" SHALLOW PIPE UNDERDRAIN
																				PAVEMENT
													100				251	100	SY	PARTIAL DEPTH PAVEMENT REPAIR
													100				253	100	SY	FULL DEPTH PAVEMENT REPAIR
	2961																254	2961	SY	2" PAVEMENT PLANING
	2840																301	2840	CY	ASPHALT CONCRETE BASE
	2020																304	2020	CY	AGGREGATE BASE
	2043																407	2043	GAL	TACK COAT (0.10 GAL/SG YD)
	4527																407	4527	GAL	PRIME COAT (0.40 GAL/SG YD)
	474																448	474	CY	ASPHALT CONCRETE INTERMEDIATE, TYPE 1, PG64-22
	627																448	627	CY	ASPHALT CONCRETE SURFACE, TYPE 1, PG64-22
														542			448SPEC	542	SY	ASPHALT DR (B)
														40			452SPEC	40	SY	CONCRETE DR (A)
	7202																609	7202	LF	CONCRETE CURB, TYPE 6
																	705	100	GAL	JOINT SEALER
																				SANITARY
					1	1		2									604	4	EACH	SANITARY MANHOLE MASS1048-AGS-R
																				EROSION CONTROL
LUMP																	207SPEC	1	EACH	EROSION CONTROL
															1		601	1	C.Y.	ROCK CHANNEL PROTECTION W/ FILTER
																	659	LUMP	LUMP	TOP SOIL SEEDING AND MULCHING
																				MAINTENANCE OF TRAFFIC
																	614SPEC	LUMP	LUMP	MAINTAINING TRAFFIC, AS PER PLAN
																				TRAFFIC CONTROL
																	630	LUMP	LUMP	SIGN REMOVAL STORAGE AND REERECTION
																				INCIDENTALS
																	619	LUMP	LUMP	FIELD OFFICE
LUMP																	623	LUMP	LUMP	CONSTRUCTION STAKING
																	624	LUMP	LUMP	MOBILIZATION

NW NE SW SE N

VERTICAL IN FEET 1 0.5 0

0 0.5 1
HORIZONTAL SCALE IN FEET

CHECKED BY: KAD
DATE: MAY, 2014
DRAWN BY: FPW
DATE: MAY, 2014

REVISIONS:

DATE	DESCRIPTION

9th St SW Improvement Project
General Summary
City of Massillon
Stark County, Ohio

Kathy Catazaro-Perry, Mayor
Massillon Ohio

DRAWING NAME: SHT4a-9thgsum.dwg
CITY NUMBER: 10ss03

ITEM 254 2" PAVEMENT PLANING

(9th St. SW) Sta. 36+15.95 to Sta. 37+77.72 (7640.28) (1/9)	848.92 SQ YD
(9th St. SW) Sta. 42+50 to Sta. 50+15) (19003.06) (1/9)	2111.47 SQ YD
TOTAL ITEM 254 =	**2960.39 SQ YD**
USED:	**2961 SQ YD**

ITEM 301 ASPHALT CONCRETE BASE

9th St. SW Sta. 8+50 to Sta. 9+80) (3475) (9/12) (1/27)	96.53 CU YD
(9th St. SW) Sta. 9+80 to Sta. 36+00) (2620) (30) (9/12) (1/27)	2183.33 CU YD
(9th St. SW) Sta. 36+00 to Sta. 36+15.95) (15.95) [(30+35) 1/2] (9/12) (1/27)	14.40 CU YD
(9th St. SW) Sta. 36+15.95 to Sta. 37+77.72) (161.77) (2) (9/12) (1/27)	8.99 CU YD
(9th St. SW) Sta. 37+77.72 to Sta. 38+00) (22.28) [(34+30) 1/2] (9/12) (1/27)	19.81 CU YD
(9th St. SW) Sta. 38+00 to Sta. 40+46.87) (246.87) (30) (9/12) (1/27)	205.73 CU YD
(9th St. SW) Sta. 40+46.87 to Sta. 42+50) (5724) (9/12) (1/27)	159.00 CU YD
(9th St. SW) Sta. 40+50 to Sta. 50+15) (765) (4) (9/12) (1/27)	85.00 CU YD
(Industrial Ave SW) (2375.15) (9/12) (1/27)	65.98 CU YD
TOTAL ITEM 301 =	**2838.77 CU YD**
USED:	**2840 CU YD**

ITEM 304 AGGREGATE BASE

9th St. SW Sta. 8+50 to Sta. 9+80) (3603.31) (6/12) (1/27)	66.73 CU YD
(9th St. SW) Sta. 9+80 to Sta. 36+00) (2620) (32) (6/12) (1/27)	1552.59 CU YD
(9th St. SW) Sta. 36+00 to Sta. 36+15.95) (15.95) [(32+37) 1/2] (6/12) (1/27)	10.19 CU YD
(9th St. SW) Sta. 36+15.95 to Sta. 37+77.72) (161.77) (3) (6/12) (1/27)	8.99 CU YD
(9th St. SW) Sta. 37+77.72 to Sta. 38+00) (22.28) [(36+32) 1/2] (6/12) (1/27)	14.03 CU YD
(9th St. SW) Sta. 38+00 to Sta. 40+46.87) (246.87) (32) (6/12) (1/27)	146.29 CU YD
(9th St. SW) Sta. 40+46.87 to Sta. 42+50) (5926.82) (6/12) (1/27)	109.76 CU YD
(9th St. SW) Sta. 42+50 to Sta. 50+15) (765) (4.5) (6/12) (1/27)	63.75 CU YD
(Industrial Ave SW) (2541.66) (6/12) (1/27)	47.07 CU YD
TOTAL ITEM 304 =	**2019.40 CU YD**
USED:	**2020 CU YD**

ITEM 407 TACK COAT(SURFACE COURSE)

9th St. SW Sta. 8+50 to Sta. 9+80) (3475) (1/9) (0.08)	30.89 GAL.
(9th St. SW) Sta. 9+80 to Sta. 36+00) (2620) (30) (1/9) (0.08)	698.67 GAL.
(9th St. SW) Sta. 36+00 to Sta. 36+15.95) (15.95) [(30+35) 1/2] (1/9) (0.08)	4.61 GAL.
(9th St. SW) Sta. 36+15.95 to Sta. 37+77.72) (7640.28) (1/9) (0.08)	67.92 GAL.
(9th St. SW) Sta. 37+77.72 to Sta. 38+00) (22.28) [(34+30) 1/2] (1/9) (0.08)	6.34 GAL.
(9th St. SW) Sta. 38+00 to Sta. 40+46.87) (246.87) (30) (1/9) (0.08)	65.83 GAL.

CONTINUE ITEM 407 TACK COAT(SURFACE COURSE)

(9th St. SW) Sta. 40+46.87 to Sta. 42+50) (5724) (1/9) (0.08)	50.88 GAL.
(9th St. SW) Sta. 42+50 to Sta. 50+10) (21293.19) (1/9) (0.08)	189.27 GAL.
(Industrial Ave SW) (2375.15) (1/9) (0.08)	21.12 GAL.
TOTAL ITEM 407 =	**1135.53 Gal.**
USED:	**1136 Gal.**

ITEM 407 TACK COAT(INTERMEDIATE COURSE)

9th St. SW Sta. 8+50 to Sta. 9+80) (3475) (1/9) (0.08)	30.89 GAL.
(9th St. SW) Sta. 9+80 to Sta. 36+00) (2620) (30) (1/9) (0.08)	698.67 GAL.
(9th St. SW) Sta. 36+00 to Sta. 36+15.95) (15.95) [(30+35) 1/2] (1/9) (0.08)	4.61 GAL.
(9th St. SW) Sta. 36+15.95 to Sta. 37+77.72) (161.77) (2) (1/9) (0.08)	1.34 GAL.
(9th St. SW) Sta. 37+77.72 to Sta. 38+00) (22.28) [(34+30) 1/2] (1/9) (0.08)	6.34 GAL.
(9th St. SW) Sta. 38+00 to Sta. 40+46.87) (246.87) (30) (1/9) (0.08)	65.83 GAL.
(9th St. SW) Sta. 40+46.87 to Sta. 42+50) (5724) (1/9) (0.08)	50.88 GAL.
(9th St. SW) Sta. 42+50 to Sta. 50+10) (760) (4) (1/9) (0.08)	27.03 GAL.
(Industrial Ave SW) (2375.15) (1/9) (0.08)	21.12 GAL.
TOTAL ITEM 407 =	**906.71 Gal.**
USED:	**907 Gal.**

ITEM 408 PRIME COAT

9th St. SW Sta. 8+50 to Sta. 9+80) (3475) (1/9) (0.40)	154.45 GAL.
(9th St. SW) Sta. 9+80 to Sta. 36+00) (2620) (30) (1/9) (0.40)	3493.33 GAL.
(9th St. SW) Sta. 36+00 to Sta. 36+15.95) (15.95) [(30+35) 1/2] (1/9) (0.40)	23.04 GAL.
(9th St. SW) Sta. 36+15.95 to Sta. 37+77.72) (161.77) (2) (1/9) (0.40)	14.38 GAL.
(9th St. SW) Sta. 37+77.72 to Sta. 38+00) (22.28) [(34+30) 1/2] (1/9) (0.40)	31.69 GAL.
(9th St. SW) Sta. 38+00 to Sta. 40+46.87) (246.87) (30) (1/9) (0.40)	329.16 GAL.
(9th St. SW) Sta. 40+46.87 to Sta. 42+50) (5724) (1/9) (0.40)	239.87 GAL.
(9th St. SW) Sta. 42+50 to Sta. 50+10) (760) (4) (1/9) (0.40)	135.11 GAL.
(Industrial Ave SW) (2375.15) (1/9) (0.40)	105.57 GAL.
TOTAL ITEM 408 =	**4526.60 Gal.**
USED:	**4527 Gal.**

ITEM 448 ASPHALT CONCRETE INTERMEDIATE COURSE, TYPE 1

9th St. SW Sta. 8+50 to Sta. 9+80) (3475) (1.5/12) (1/27)	16.09 CU YD
(9th St. SW) Sta. 9+80 to Sta. 36+00) (2620) (30) (1.5/12) (1/27)	363.89 CU YD
(9th St. SW) Sta. 36+00 to Sta. 36+15.95) (15.95) [(30+35) 1/2] (1.5/12) (1/27)	2.40 CU YD
(9th St. SW) Sta. 36+15.95 to Sta. 37+77.72) (161.77) (2) (1.5/12) (1/27)	1.50 CU YD
(9th St. SW) Sta. 37+77.72 to Sta. 38+00) (22.28) [(34+30) 1/2] (1.5/12) (1/27)	3.30 CU YD

CONTINUE ITEM 448 ASPHALT CONCRETE INTERMEDIATE COURSE, TYPE 1

(9th St. SW) Sta. 38+00 to Sta. 40+46.87) (246.87) (30) (1.5/12) (1/27)	34.29 CU YD
(9th St. SW) Sta. 40+46.87 to Sta. 42+50) (5724) (1.5/12) (1/27)	26.50 CU YD
(9th St. SW) Sta. 42+50 to Sta. 50+15) (765) (4) (1.5/12) (1/27)	14.17 CU YD
(Industrial Ave SW) (2375.15) (9/12) (1/27)	11.00 CU YD
TOTAL ITEM 448 =	**473.14 CU YD**
USED:	**474 CU YD**

ITEM 448 ASPHALT CONCRETE SURFACE COURSE, TYPE 1

9th St. SW Sta. 8+50 to Sta. 9+80) (3475) (1.5/12) (1/27)	16.09 CU YD
(9th St. SW) Sta. 9+80 to Sta. 36+00) (2620) (30) (1.5/12) (1/27)	363.89 CU YD
(9th St. SW) Sta. 36+00 to Sta. 36+15.95) (15.95) [(30+35) 1/2] (1.5/12) (1/27)	2.40 CU YD
(9th St. SW) Sta. 36+15.95 to Sta. 37+77.72) (7640.28) (1.5/12) (1/27)	35.37 CU YD
(9th St. SW) Sta. 37+77.72 to Sta. 38+00) (22.28) [(34+30) 1/2] (1.5/12) (1/27)	3.30 CU YD
(9th St. SW) Sta. 38+00 to Sta. 40+46.87) (246.87) (30) (1.5/12) (1/27)	34.29 CU YD
(9th St. SW) Sta. 40+46.87 to Sta. 42+50) (5397) (1.5/12) (1/27)	24.99 CU YD
(9th St. SW) Sta. 42+50 to Sta. 50+10) (21293.19) (2/12) (1/27)	131.44 CU YD
(Industrial Ave SW) (2375.15) (2/12) (1/27)	14.67 CU YD
TOTAL ITEM 448 =	**626.44 CU YD**
USED:	**627 CU YD**

ITEM 609 CONCRETE CURB, TYPE 6

RIGHT	
(9th St. SW Sta. 9+80 to Sta. 42+50)	3270.00 LF
LEFT	
(9th St SW Sta. 9+80 to Sta. 22+47.69)	1267.69 LF
(Industrial 135.95 CALC.)	135.95 LF
(9th St SW. 23+65.14 to Sta. 36+15.95)	1250.81 LF
(9th St SW. 37+77.72 to Sta. 50+15)	1237.28 LF
(9th St SW. Flares)	40.00 LF
TOTAL ITEM 609 =	**7201.73 LF**
USED:	**7202 LF**

ITEM 605 4" SHALLOW PIPE UNDERDRAINS

RIGHT	
(9th St. SW Sta. 9+80 to Sta. 42+50)	3270.00 LF
LEFT	
(9th St SW Sta. 9+80 to Sta. 22+47.69)	1267.69 LF
(Industrial 135.95 CALC.)	135.95 LF
(9th St SW. 23+65.14 to Sta. 36+15.95)	1250.81 LF
(9th St SW. 37+77.72 to Sta. 50+15)	1237.28 LF
(9th St SW. Flares)	40.00 LF
TOTAL ITEM 605 =	**7201.73 LF**
USED:	**7202 LF**

NW NE SW SE N

VERTICAL 1 .5 0 FEET

0 .5 1 HORIZONTAL SCALE IN FEET

CHECKED BY: KAD

DATE: MAY, 2012

DRAWN BY: FPW

DATE: MAY, 2012

REVISIONS: DATE | DESCRIPTION

9th St SW Improvement Project
Calculations
City of Massillon
Stark County, Ohio

Kathy Catazaro-Perry, Mayor
Massillon
City of Champions

DRAWING NAME: SHT6-9thcalc1.DWG

CITY NUMBER: 09st01

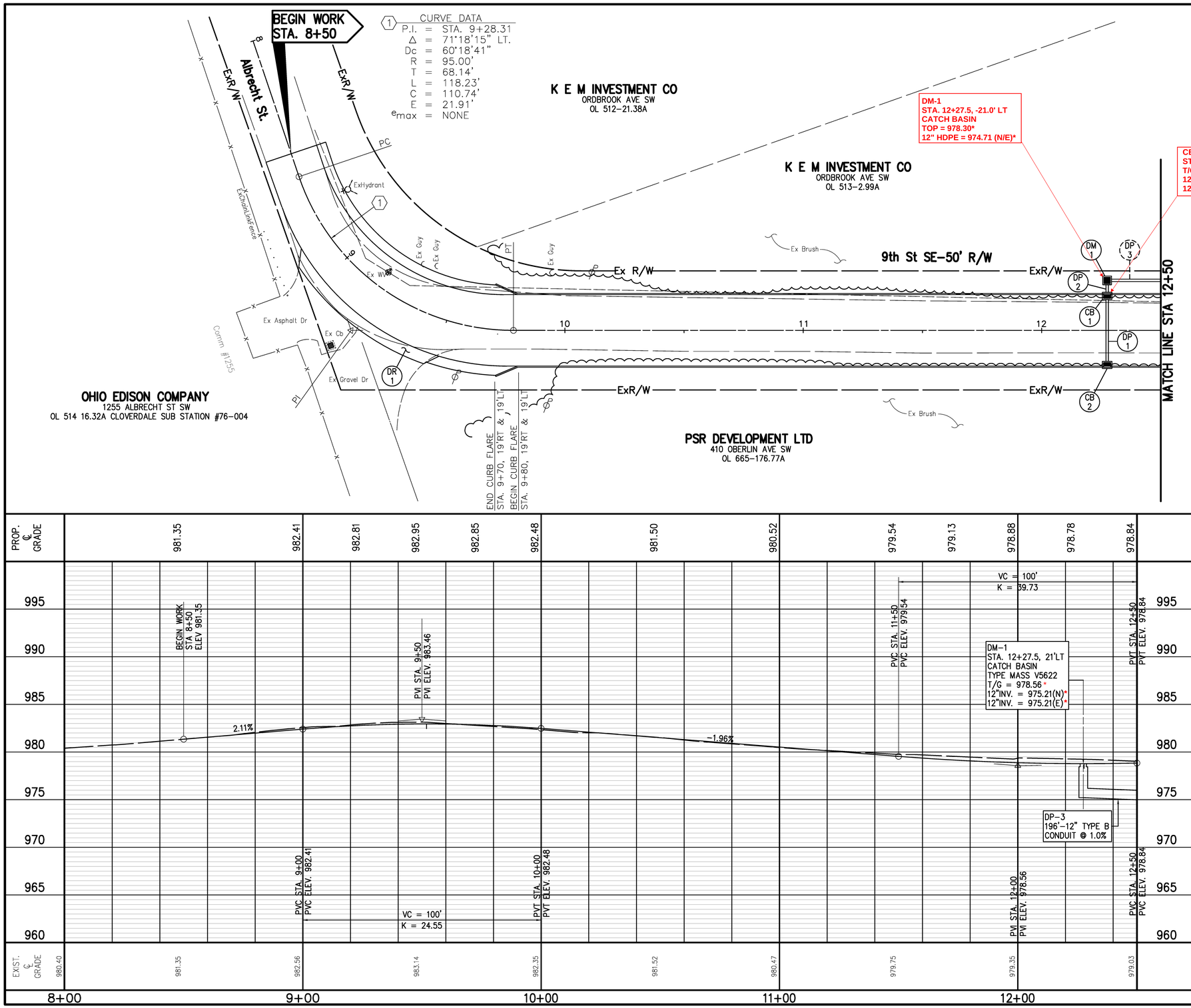

REF. No.	SIDE	STATION FROM	STATION TO	603 12" TYPE B CONDUIT LF	604 CATCH BASIN TYPE MASS 7030 EACH	604 CATCH BASIN TYPE MASS V5622 EACH
CB-1	LT	12+27.5			1	
CB-2	RT	12+27.5			1	
DM-1	LT	12+27.5				1
DP-1	RT/LT	12+27.5	12+27.5	30		
DP-2	LT	12+27.5	12+27.5	6		
TOTALS CARRIED TO GENERAL SUMMARY				36	2	1

REVISIONS:

DATE	DESCRIPTION

VERTICAL IN FEET 0 10 20

HORIZONTAL SCALE IN FEET 0 10 20

CHECKED BY: KAD

DATE: MAY, 2014

DRAWN BY: FPW

DATE: MAY, 2014

9th St. SW Improvement Project

9th St. SE Plan and Profile Sta. 8+00 and Sta. 12+50

City of Massillon
Stark County, Ohio

Kathy Catazaro-Perry, Mayor
Massillon
City of Champions

DRAWING NAME: SHT7-9thpp1.DWG

CITY NUMBER: 09st01

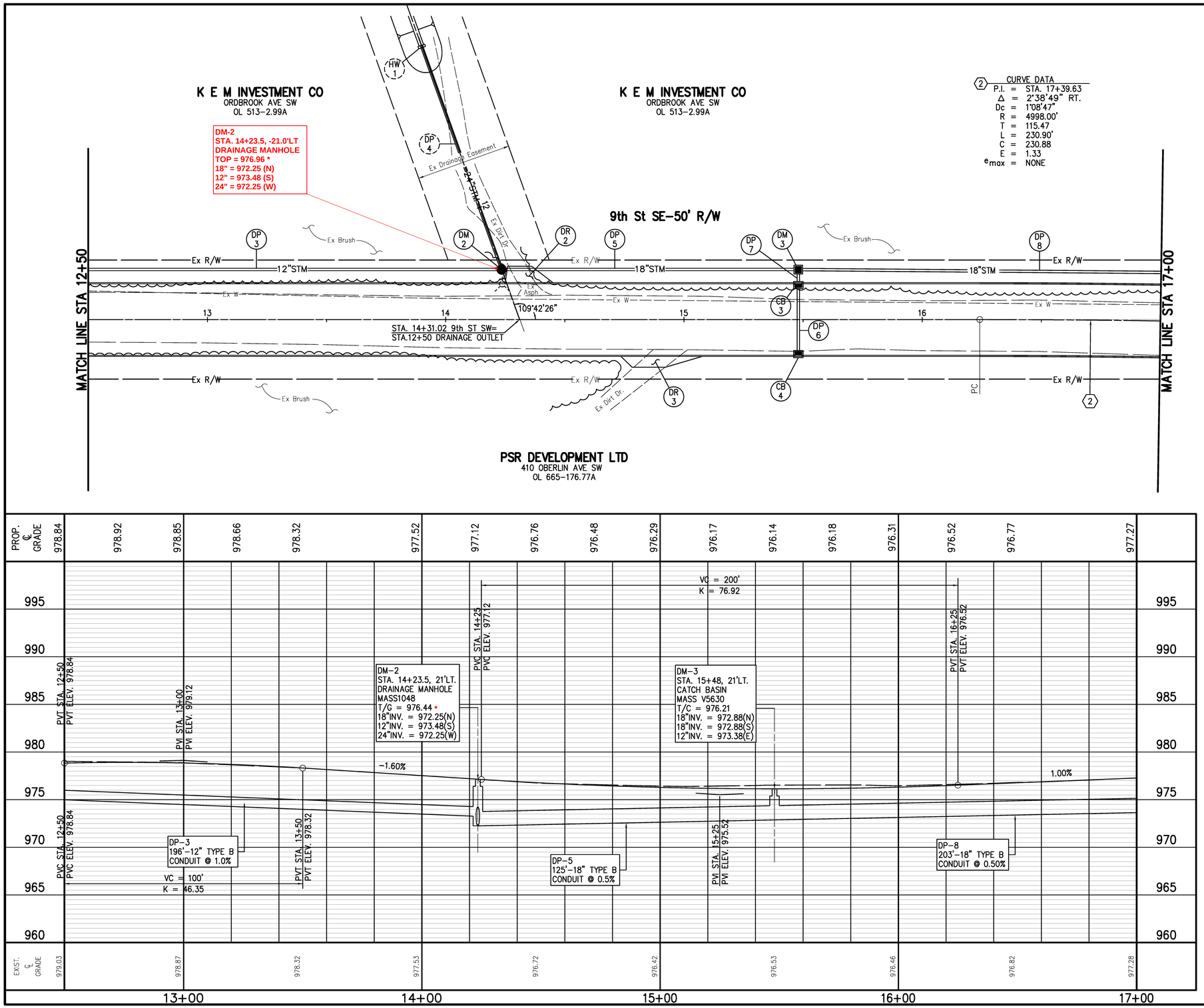

REF. No.	SIDE	STATION FROM	STATION TO	603 12" TYPE B CONDUIT (LF)	603 18" TYPE B CONDUIT (LF)	604 CATCH BASIN TYPE MASS 7030 (EACH)	604 CATCH BASIN TYPE MASS V5630 (EACH)	604 DRAINAGE MANHOLE MASS 1048 (EACH)
CB-3	LT		15+48			1		
CB-4	RT		15+48			1		
DM-1	LT		14+23.5					1
DM-2	LT		15+48				1	
DP-3	LT	12+27.5	14+23.5	196				
DP-5	LT	14+23.5	15+48		125			
DP-6	RT/LT	15+48	15+48	30				
DP-7	LT	15+48	15+48	6				
DP-8	LT	15+48	17+50		203			
TOTALS CARRIED TO GENERAL SUMMARY				232	328	2	1	1

VERTICAL IN FEET 0 10 20

HORIZONTAL SCALE IN FEET 0 10 20

CHECKED BY: KAD

DATE: MAY, 2014

DRAWN BY: FPW

DATE: MAY, 2014

REVISIONS: DATE | DESCRIPTION

9th St. SW Improvement Project

9th St. SE Plan and Profile Sta. 12+50 and Sta. 17+00

City of Massillon
Stark County, Ohio

Kathy Catazaro-Perry, Mayor

Massillon City of Champions

DRAWING NAME: Sht8-9thPP2.DWG

CITY NUMBER: 09st01

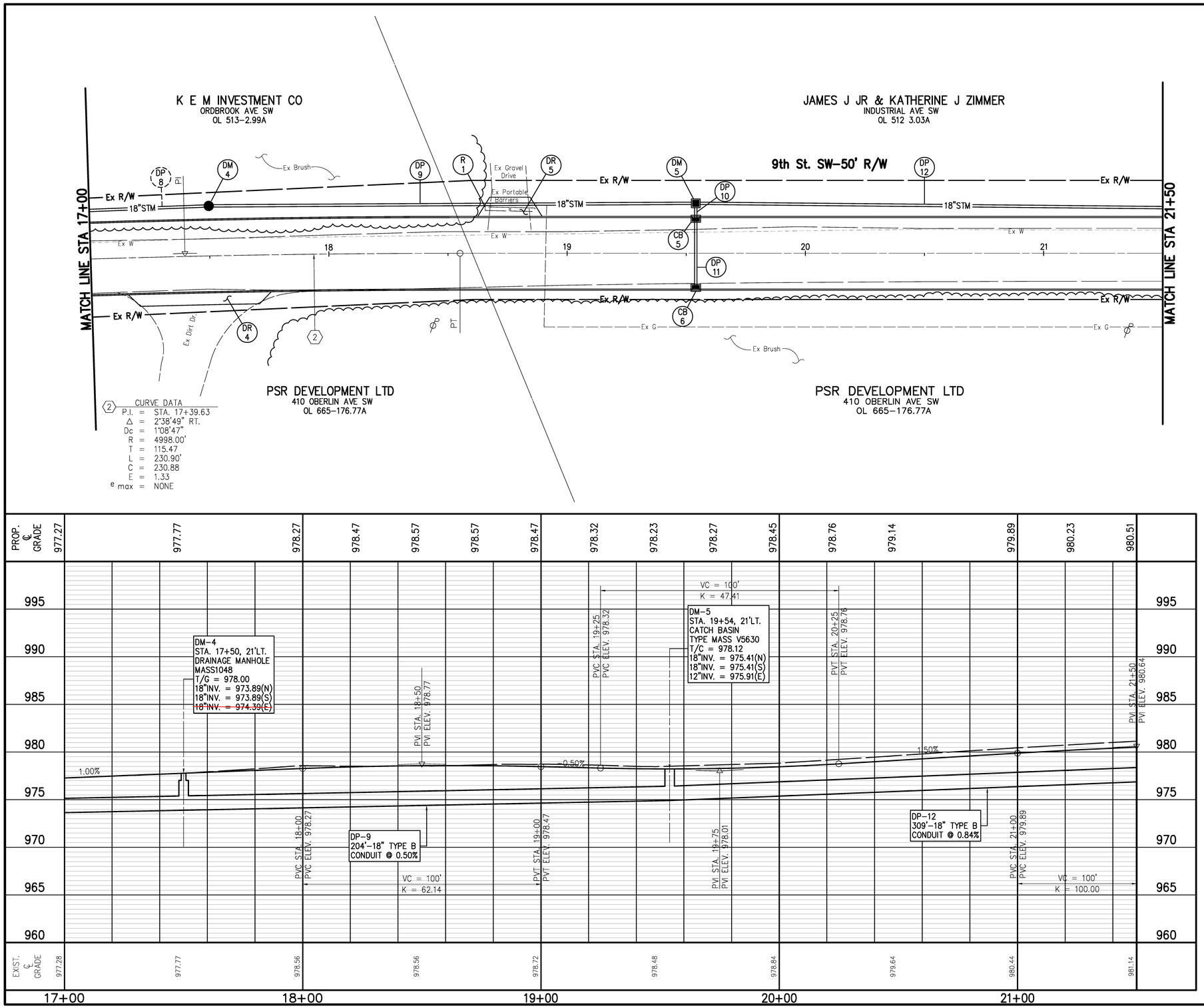

REF. No.	SIDE	STATION FROM	STATION TO	202 BARRIER RE-LOCATED EACH	603 12" CONDUIT TYPE B LF	603 18" CONDUIT TYPE B LF	604 CATCH BASIN TYPE MASS 7030 EACH	604 CATCH BASIN TYPE MASS V5630 EACH	604 DRAINAGE MANHOLE MASS 1048 EACH
CB-5	LT		19+54				1		
CB-6	RT		19+54				1		
DM-4	LT		17+50						1
DM-5	LT		19+54					1	
DP-9	LT	17+50	19+54		204				
DP-10	LT	19+54	19+54			6			
DP-11	RT/LT	19+54	19+54			30			
DP-12	LT	19+54	22+63.16		309				
R-1	LT	18+66	18+87	2					
TOTALS CARRIED TO GENERAL SUMMARY				2	513	36	2	1	1

VERTICAL IN FEET 5 2.5 0

HORIZONTAL SCALE IN FEET 0 10 20

CHECKED BY: KAD

DATE: MAY, 2014

DRAWN BY: FPW

DATE: MAY, 2014

REVISIONS:

DATE	DESCRIPTION

9th St. SW Improvement Project

9th St. SE Plan and Profile Sta. 17+00 and Sta. 21+50

City of Massillon
Stark County, Ohio

Kathy Catazaro-Perry, Mayor

Massillon City of Champions

DRAWING NAME: SHT9-9thpp3.DWG

CITY NUMBER: 09st01

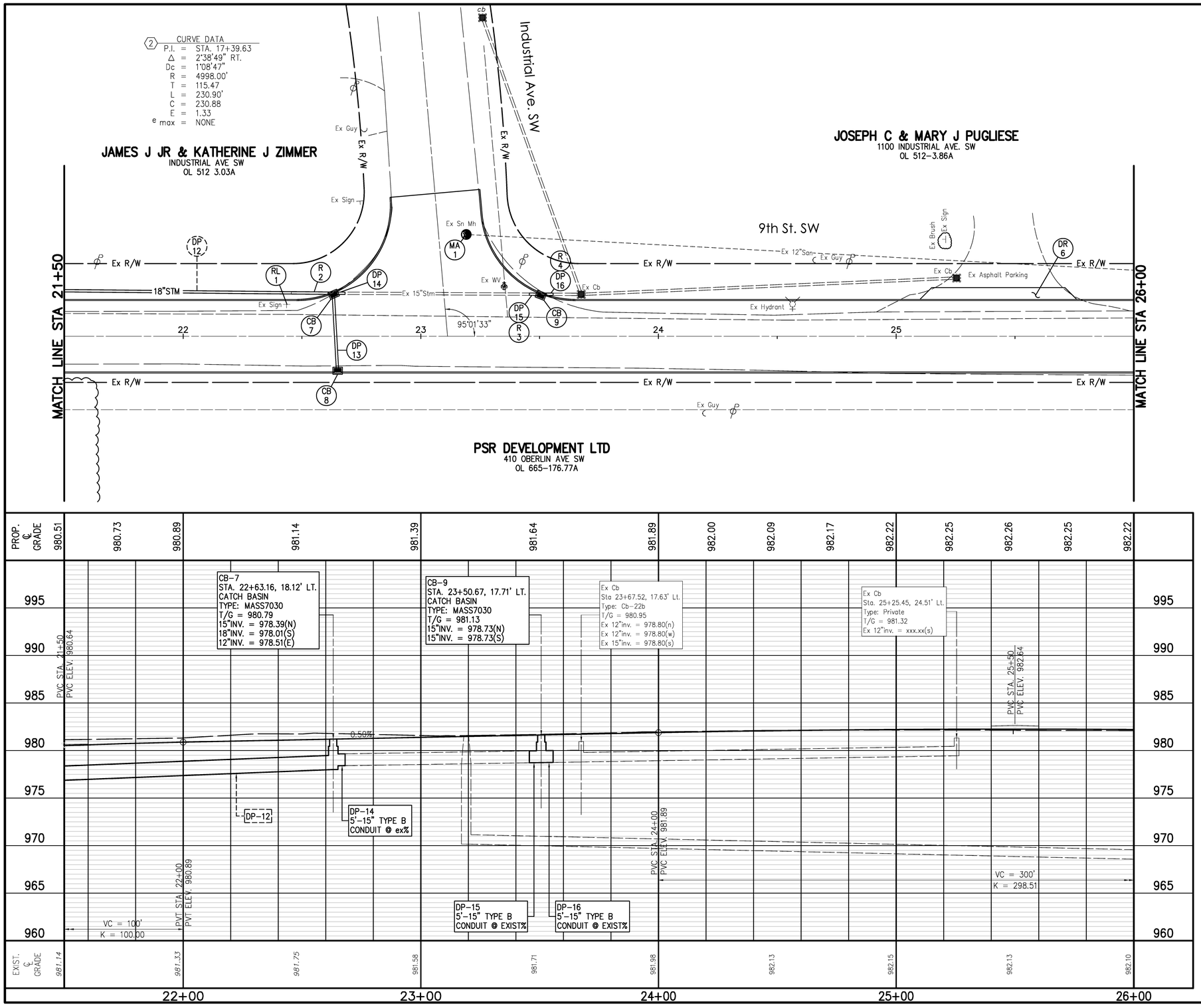

REF. No.	SIDE	STATION FROM	STATION TO	202 PIPE REMOVED	202 SIGN REMOVED AND RELOC.	603 12" TYPE B CONDUIT	603 15" TYPE B CONDUIT	604 CATCH BASIN TYPE MASS 7030	604 SANITARY MANHOLE MASS 1048-AGS-R
				LF	EACH	LF	LF	EACH	EACH
CB-7	LT	XX	XX					1	
CB-8	RT	XX	XX					1	
CB-9	LT	XX	XX					1	
DP-13	RT/LT	XX	XX			33			
DP-14	LT	XX	XX				5		
DP-15	LT	XX	XX				5		
DP-16	LT	XX	XX				5		
MA-1	LT	XX	XX						1
R-2	LT	XX	XX	22					
R-3	LT	XX	XX	5					
R-4	LT	XX	XX	5					
RL-1	LT	XX	XX		1				
TOTALS CARRIED TO GENERAL SUMMARY				32	1	33	15	3	1

VERTICAL IN FEET 0 10 20

HORIZONTAL SCALE IN FEET 0 10 20

CHECKED BY: KAD

DATE: MAY, 2014

DRAWN BY: FPW

DATE: MAY, 2014

REVISIONS:

DATE	DESCRIPTION

9th St. SW Improvement Project

9th St. SE Plan and Profile Sta. 21+50 and Sta. 26+00

City of Massillon
Stark County, Ohio

Kathy Catazaro-Perry, Mayor

Massillon City of Champions

DRAWING NAME: SHT10-9thPP4.DWG

CITY NUMBER: 09st01

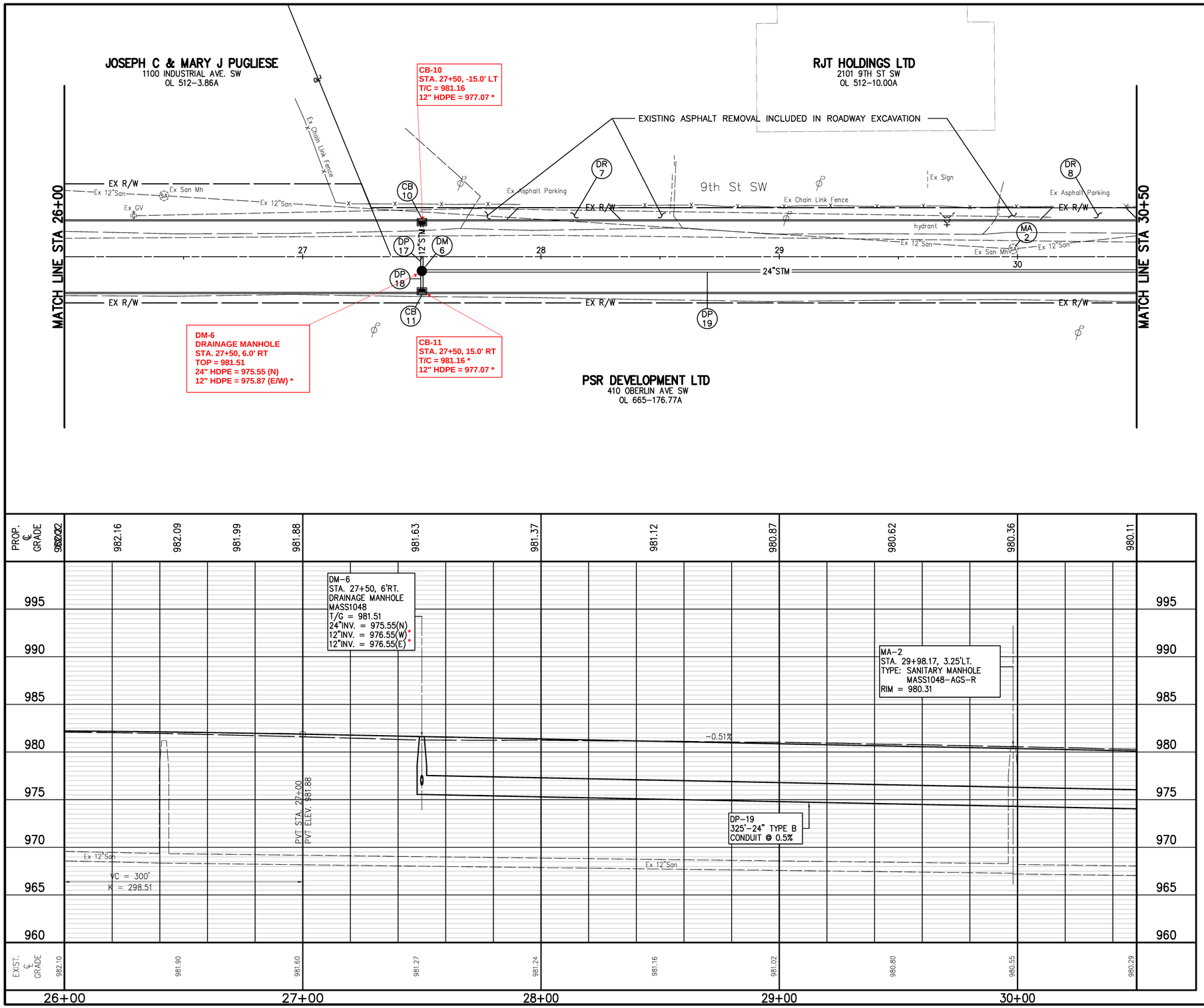

REF. No.	SIDE	STATION FROM	STATION TO	603 12" TYPE B CONDUIT LF	603 24" TYPE B CONDUIT LF	604 CATCH BASIN TYPE MASS 7030 EACH	604 DRAINAGE MANHOLE MASS 1048 EACH	604 SANITARY MANHOLE MASS 1048-AGS-R EACH
CB-10	LT	27+50				1		
CB-11	RT	27+50				1		
DM-6	RT	27+50					1	
DP-17	RT/LT	27+50	27+50	21				
DP-18	RT	27+50	27+50	9				
DP-19	RT	27+50	30+75		325			
MA-2	LT	29+98.17						1
TOTALS CARRIED TO GENERAL SUMMARY				30	325	2	1	1

REVISIONS:

DATE	DESCRIPTION

VERTICAL IN FEET 0 10 20

HORIZONTAL SCALE IN FEET 0 10 20

CHECKED BY: KAD
DATE: MAY, 2014
DRAWN BY: FPW
DATE: MAY, 2014

9th St. SW Improvement Project

9th St. SE Plan and Profile Sta. 26+00 and Sta. 30+50

City of Massillon
Stark County, Ohio

Kathy Catazaro-Perry, Mayor
Massillon City of Champions

DRAWING NAME: SHT11-9thPP5.DWG
CITY NUMBER: 09ss01

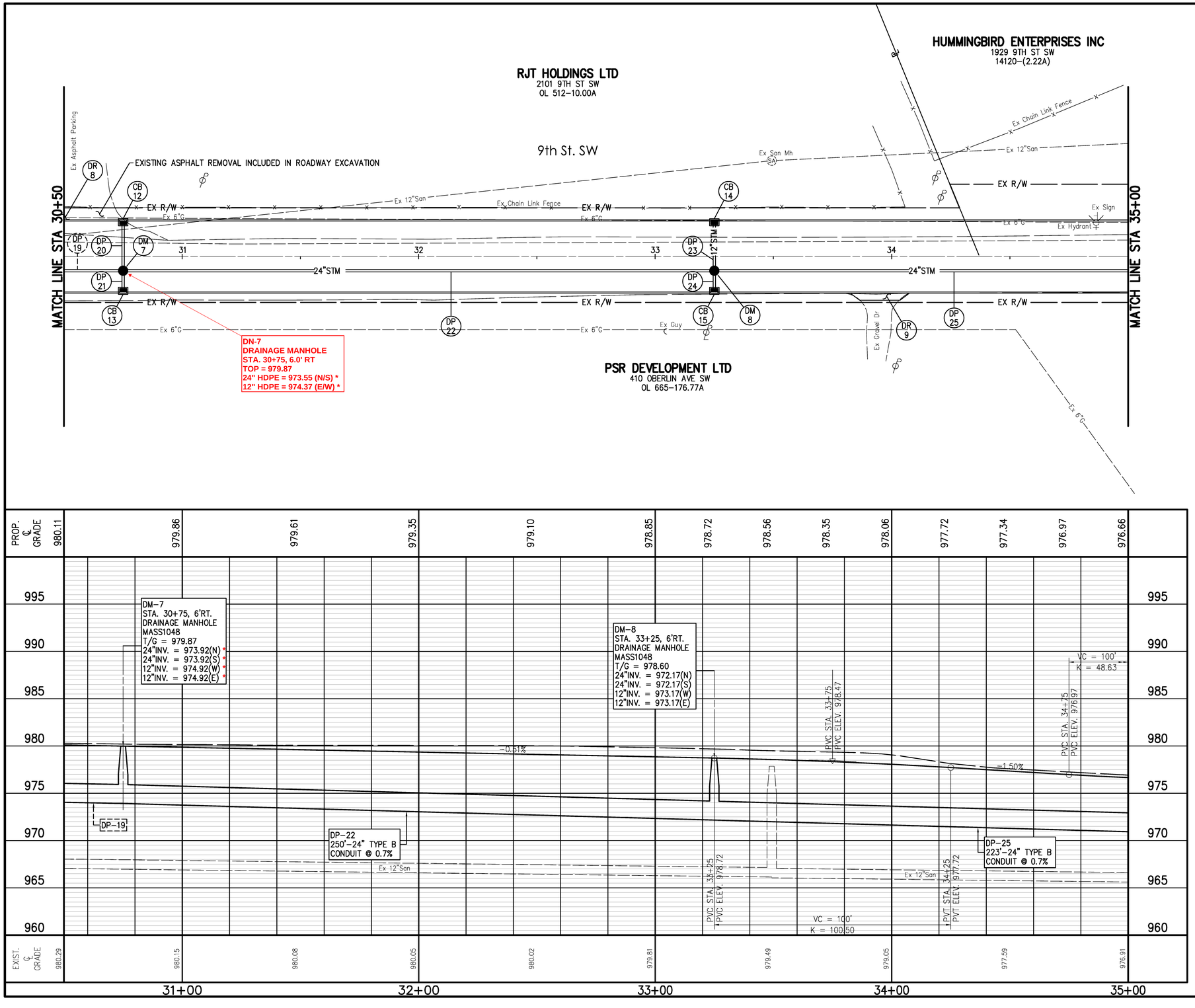

REF. No.	SIDE	STATION FROM	STATION TO	603 12" TYPE B CONDUIT LF	603 24" TYPE B CONDUIT LF	604 CATCH BASIN TYPE MASS 7030 EACH	604 DRAINAGE MANHOLE MASS 1048 EACH
CB-12	LT	30+75				1	
CB-13	RT	30+75				1	
CB-14	LT	33+25				1	
CB-15	RT	33+25				1	
DM-7	RT	30+75					1
DM-8	RT	33+25					1
DP-20	RT/LT	30+75	30+75	21			
DP-21	RT	30+75	30+75	9			
DP-22	RT	30+75	33+25		250		
DP-23	RT/LT	33+25	33+25	21			
DP-24	RT	33+25	33+25	9			
DP-25	RT	33+25	35+48		223		
TOTALS CARRIED TO GENERAL SUMMARY				60	473	4	2

VERTICAL IN FEET 0 10 20

HORIZONTAL SCALE IN FEET 0 10 20

CHECKED BY: KAD

DATE: MAY, 2014

DRAWN BY: FPW

DATE: MAY, 2014

REVISIONS:

DATE	DESCRIPTION

9th St. SW Improvement Project

9th St. SE Plan and Profile Sta. 30+50 and Sta. 35+00

City of Massillon
Stark County, Ohio

Kathy Catazaro-Perry, Mayor

Massillon City of Champions

DRAWING NAME: SHT12-9thPP6.DWG

CITY NUMBER: 09st01

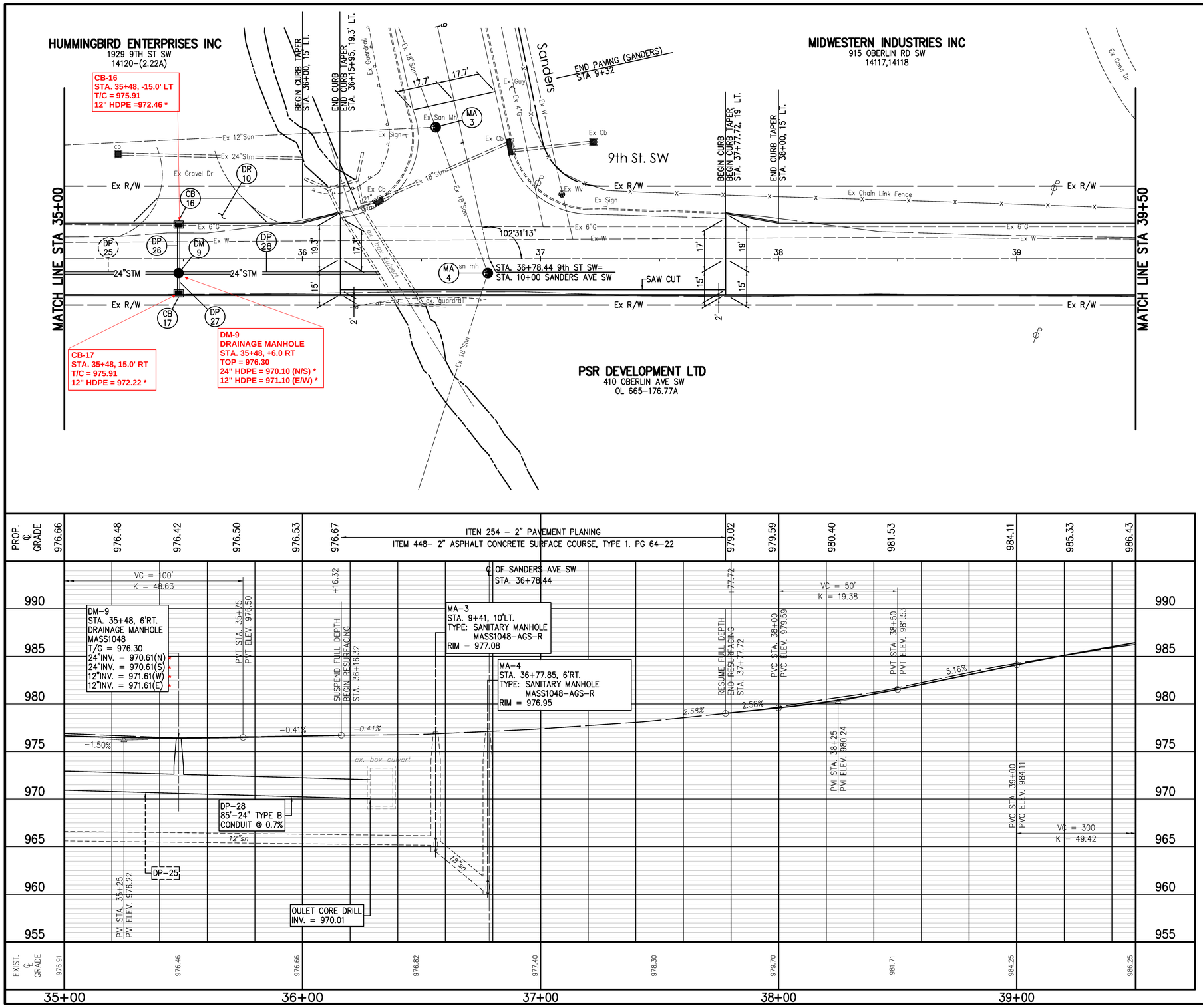

REF. No.	SIDE	STATION FROM	STATION TO	603 12" TYPE B CONDUIT (LF)	603 24" TYPE B CONDUIT (LF)	604 CATCH BASIN TYPE MASS 1070 (EACH)	604 DRAINAGE MANHOLE MASS 1048 (EACH)	604 SANITARY MANHOLE MASS 1048–AGS–R (EACH)
CB–16	LT	35+48				1		
CB–17	RT	35+48				1		
DM–9	RT	35+48					1	
DP–26	RT/LT	35+48	35+48	21				
DP–27	RT	35+48	35+48	9				
DP–28	RT	35+48	36+33		85			
MA–3	LT	9+41						1
MA–4	RT	36+77.85						1
TOTALS CARRIED TO GENERAL SUMMARY				30	85	2	1	2

VERTICAL IN FEET 0 10 20

HORIZONTAL SCALE IN FEET 0 10 20

CHECKED BY: KAD
DATE: MAY, 2014
DRAWN BY: FPW
DATE: MAY, 2014

REVISIONS:

DATE	DESCRIPTION

9th St. SW Improvement Project

9th St. SE Plan and Profile Sta. 21+50 and Sta. 26+00

City of Massillon
Stark County, Ohio

Kathy Catazaro-Perry, Mayor

Massillon City of Champions

DRAWING NAME: SHT13–9thPP7.DWG
CITY NUMBER: 09st01

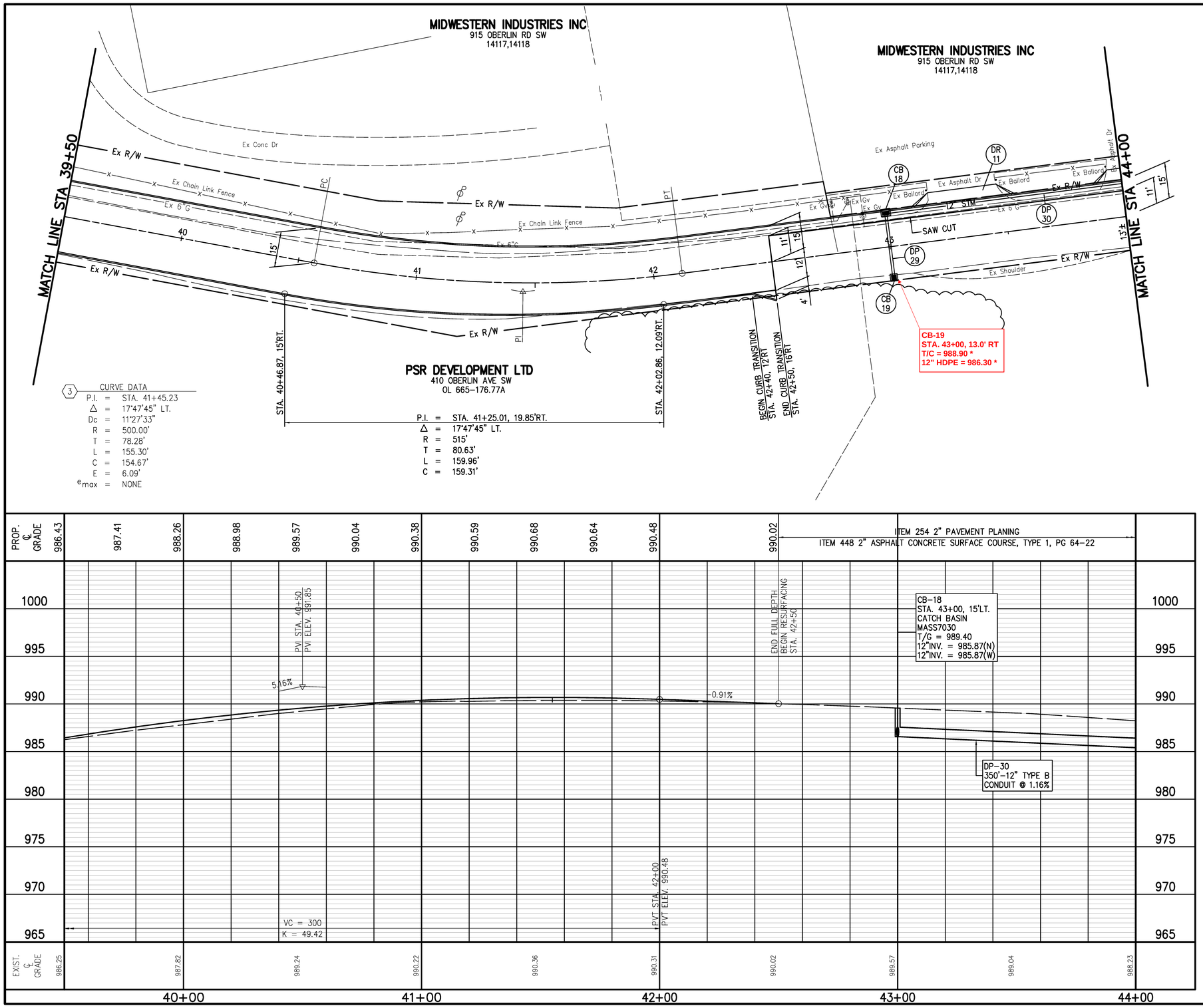

REF. No.	SIDE	STATION FROM	STATION TO	603 12" TYPE B CONDUIT EACH	604 CATCH BASIN TYPE MASS V5622 EACH	604 CATCH BASIN MASS 7030 EACH
CB-18	LT		43+00			1
CB-19	RT		43+00		1	
DP-29	RT/LT	43+00	43+00	28		
DP-30	LT	43+00	46+50	350		
TOTALS CARRIED TO GENERAL SUMMARY				378	1	1

VERTICAL IN FEET 0 10 20

HORIZONTAL SCALE IN FEET 0 10 20

CHECKED BY: KAD

DATE: MAY, 2012

DRAWN BY: FPW

DATE: MAY, 2012

REVISIONS:

DATE	DESCRIPTION

9th St. SW Improvement Project

9th St. SE Plan and Profile Sta. 21+50 and Sta. 26+00

City of Massillon
Stark County, Ohio

Kathy Catazaro-Perry, Mayor

Massillon City of Champions

DRAWING NAME: SHT14-9thppB.dwg

CITY NUMBER: 09st01

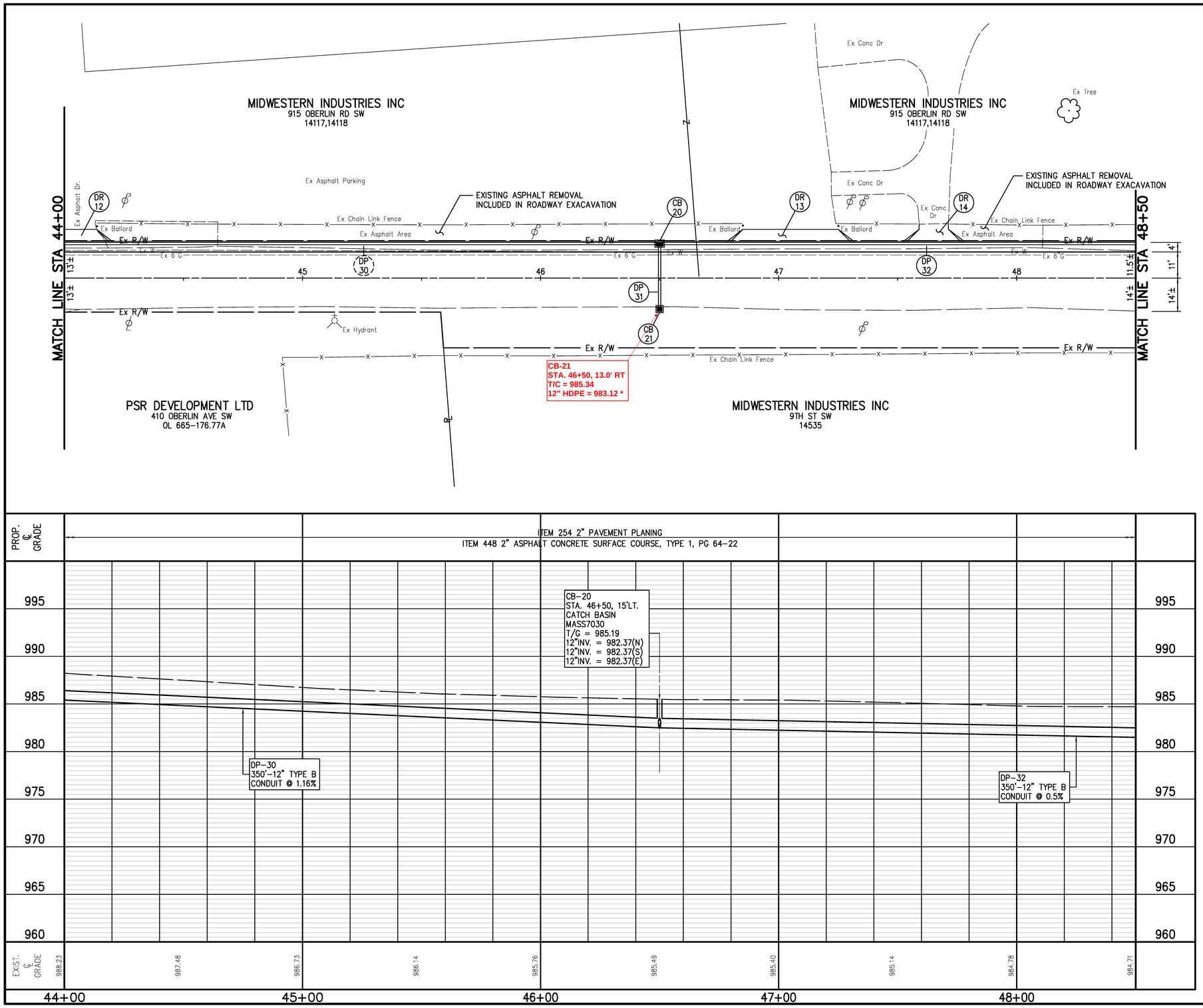

REF. No.	SIDE	STATION FROM	STATION TO	603 12" TYPE B CONDUIT LF	604 CATCH BASIN MASS 7030 EACH	604 CATCH BASIN TYPE MASS V5622 EACH
CB-20	LT	46+50			1	
CB-21	RT	46+50				1
DP-31	RT/LT	46+50	46+50	28		
DP-32	LT	46+50	50+00	350		
TOTALS CARRIED TO GENERAL SUMMARY				378	1	1

VERTICAL IN FEET 0 10 20

HORIZONTAL SCALE IN FEET 0 10 20

CHECKED BY: KAD
DATE: MAY, 2014
DRAWN BY: FPW
DATE: MAY, 2014

REVISIONS:

DATE	DESCRIPTION

9th St. SW Improvement Project

9th St. SE Plan and Profile Sta. 44+00 and Sta. 48+50

City of Massillon
Stark County, Ohio

Kathy Catazaro-Perry, Mayor

Massillon City of Champions

DRAWING NAME: SHT15-9thpp9.DWG
CITY NUMBER: 09st01

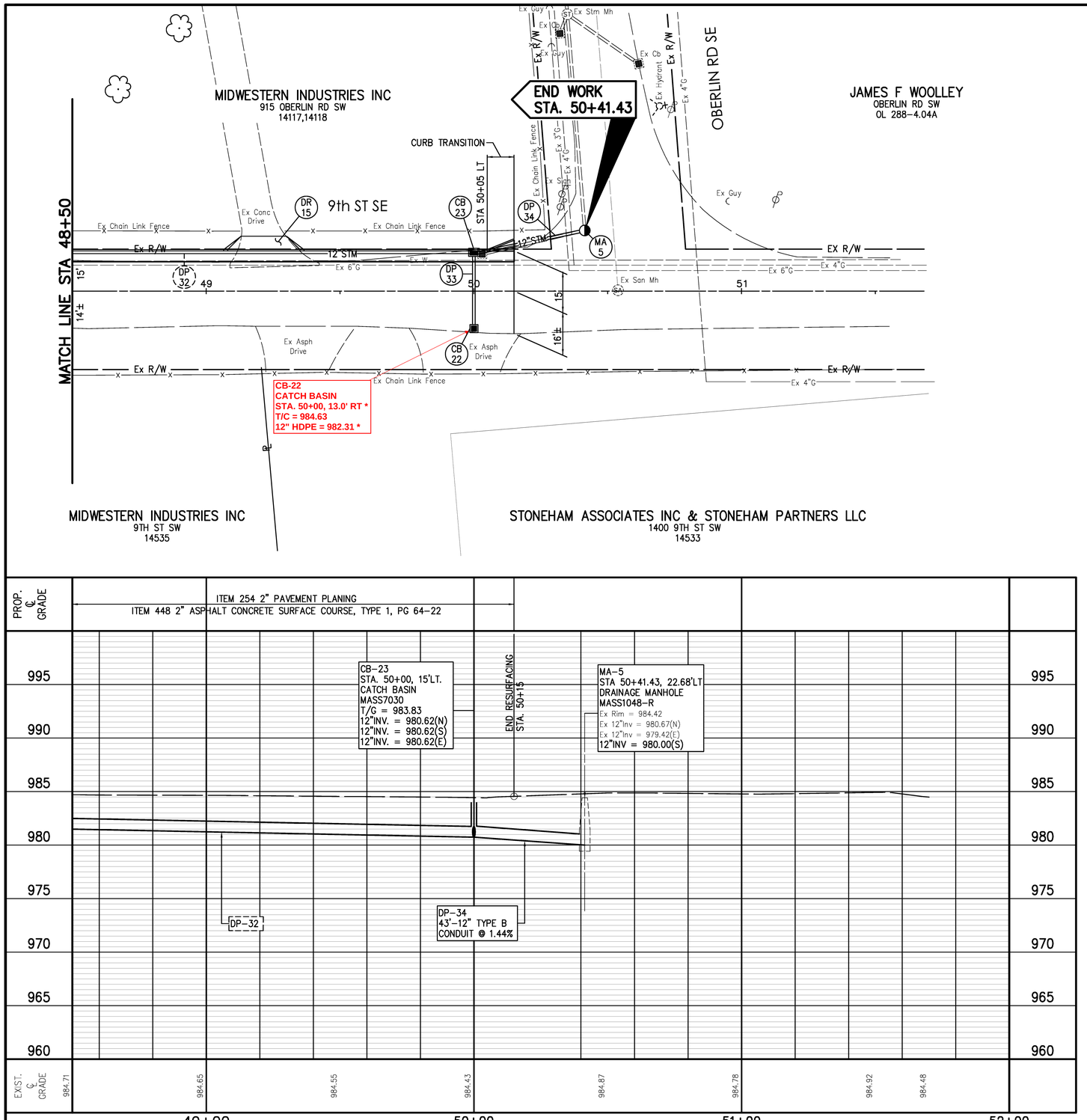

REF. No.	SIDE	STATION FROM	STATION TO	202 PIPE REMOVED	202 CATCH BASIN REMOVED	603 12" TYPE B CONDUIT	604 CATCH BASIN TYPE MASS 7030	604 CATCH BASIN TYPE MASS V5622	604 DRAINAGE MANHOLE MASS 1048 -R
				LF	EACH	LF	EACH	EACH	EACH
CB-22	RT	50+00						1	
CB-23	LT	50+00					1		
DP-33	RT/LT	50+00	50+00			29			
DP-34	LT	50+00	50+41.43			43			
MA-5	LT	50+41.43							1
R-5	RT/LT	50+03			1				
R-6	LT	50+03	50+41.43	40					
TOTALS CARRIED TO GENERAL SUMMARY				40	1	72	1	1	1

VERTICAL IN FEET 0 10 20

HORIZONTAL SCALE IN FEET 0 10 20

CHECKED BY: KAD
DATE: MAY, 2014
DRAWN BY: FPW
DATE: MAY, 2014

REVISIONS:

DATE	DESCRIPTION

9th St. SW Improvement Project

9th St. SE Plan and Profile Sta. 48+50 and Sta. 52+00

City of Massillon
Stark County, Ohio

Kathy Catazaro-Perry, Mayor
Massillon City of Champions

DRAWING NAME: SHT16-9thpp10
CITY NUMBER: 09st01

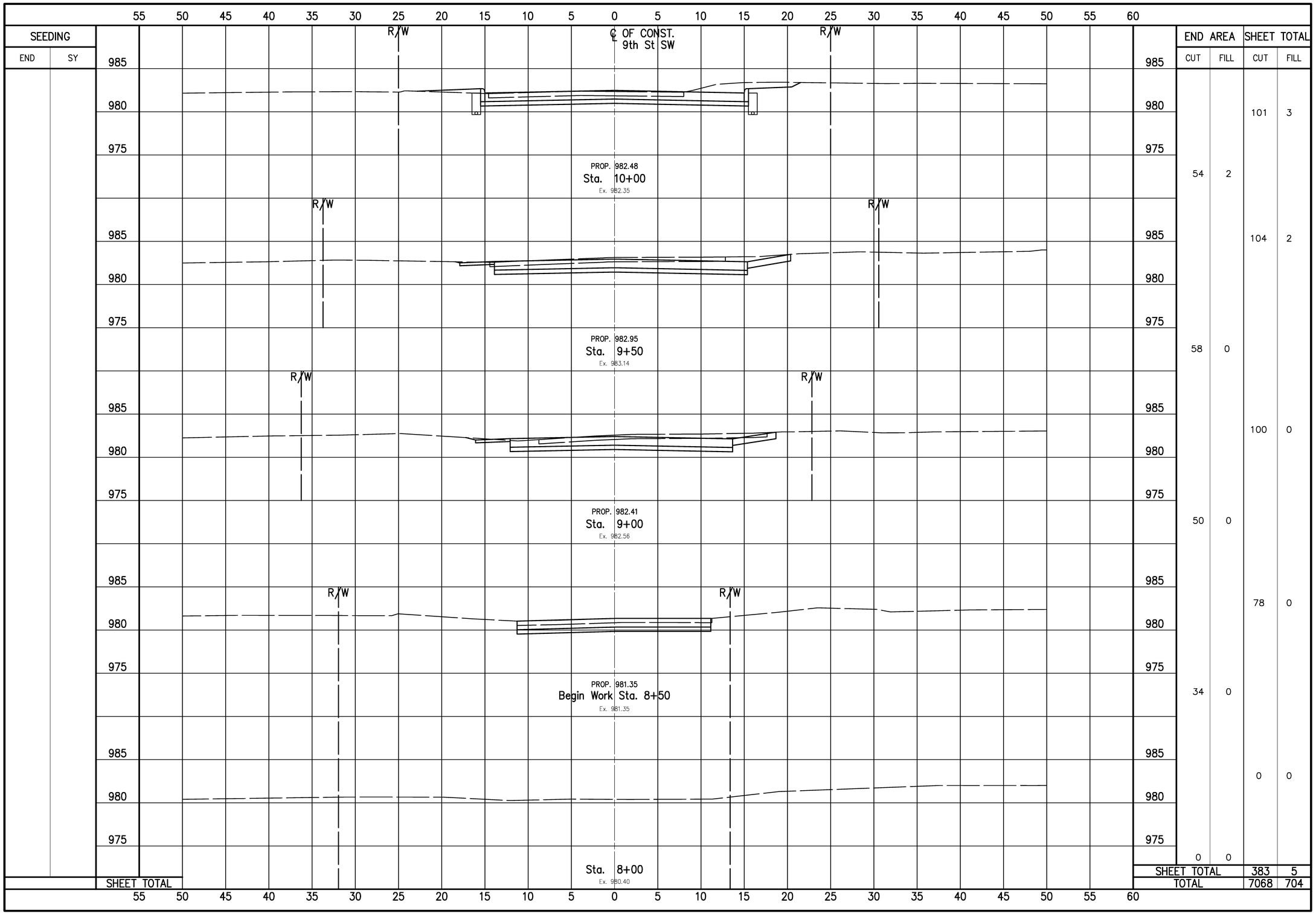

NW NE SW SE N

VERTICAL IN FEET 5 2.5 0

0 2.5 5
HORIZONTAL SCALE IN FEET

CHECKED BY: KAD
DATE: MAY, 2014
DRAWN BY: FPW
DATE: MAY, 2014

REVISIONS:

DATE	DESCRIPTION

9th St. SW Improvement Project
9th St SW Cross Section (Sta. 8+00 to Sta. 10+00)
City of Massillon
Stark County, Ohio

Kathy Catazaro-Perry, Mayor
Massillon
City of Champions

DRAWING NAME: SHT17-9thXS1.dwg
CITY NUMBER: 09st01

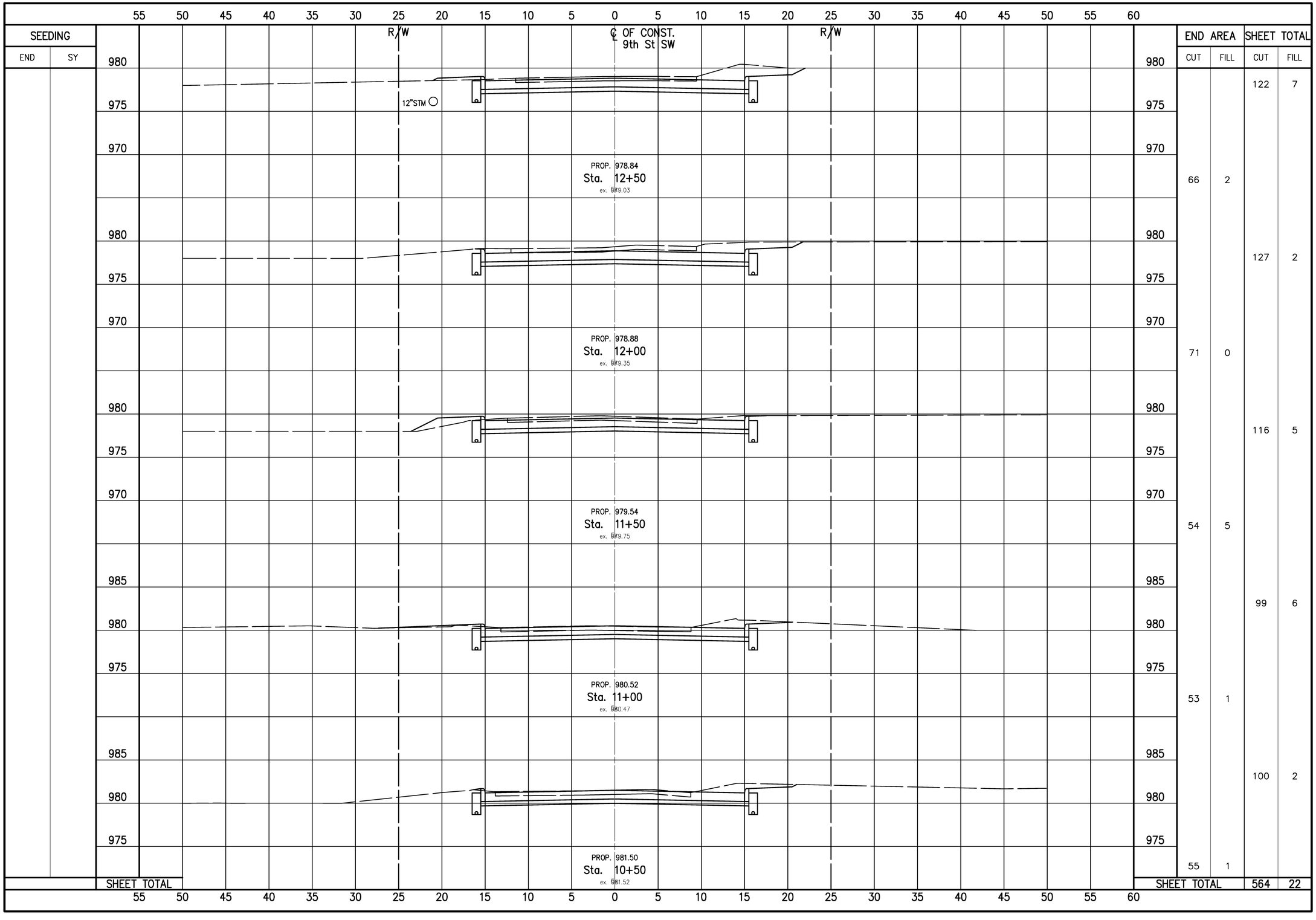

NW NE SW SE

VERTICAL IN FEET 5 2.5 0

0 2.5 5
HORIZONTAL SCALE IN FEET

CHECKED BY: KAD
DATE: Sept, 2012
DRAWN BY: FPW
DATE: Sept, 2012

REVISIONS:

DATE	DESCRIPTION

9th St. SW Improvement Project

9th St SW Cross Section (Sta. 10+50 to Sta. 12+50)

City of Massillon
Stark County, Ohio

Kathy Catazaro-Perry, Mayor
Massillon City of Champions

DRAWING NAME: SHT18-9thXS2.dwg
CITY NUMBER: 09st01

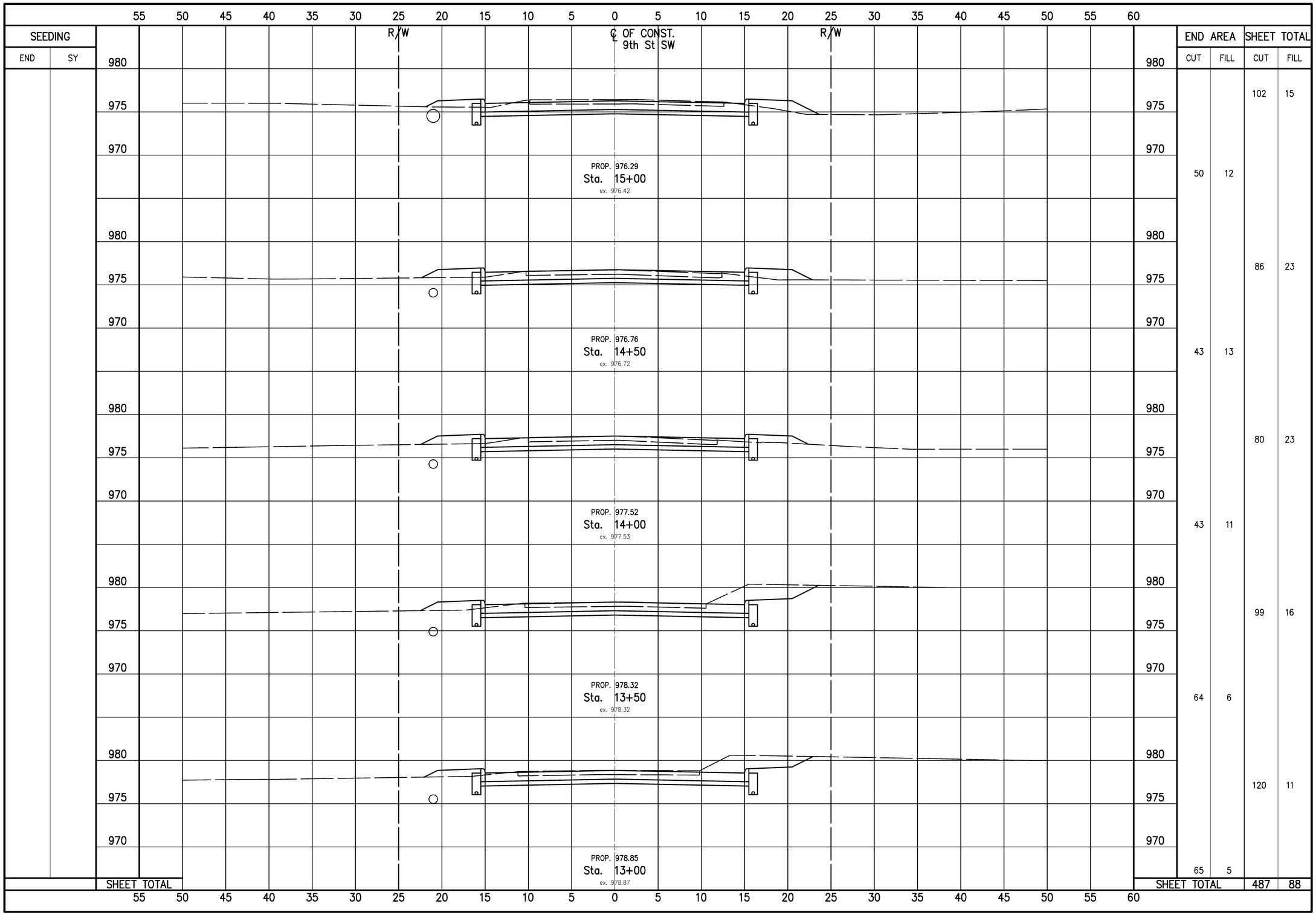

VERTICAL IN FEET
5
2.5
0

HORIZONTAL SCALE IN FEET
0 2.5 5

CHECKED BY: KAD
DATE: Sept, 2012
DRAWN BY: FPW
DATE: Sept, 2012

REVISIONS:

DATE	DESCRIPTION

9th St. SW Improvement Project

9th St SW Cross Section (Sta. 13+00 to Sta. 15+00)

City of Massillon
Stark County, Ohio

Kathy Catazaro-Perry, Mayor
Massillon
City of Champions

DRAWING NAME: SHT19-9thXS3.dwg
CITY NUMBER: 09st01

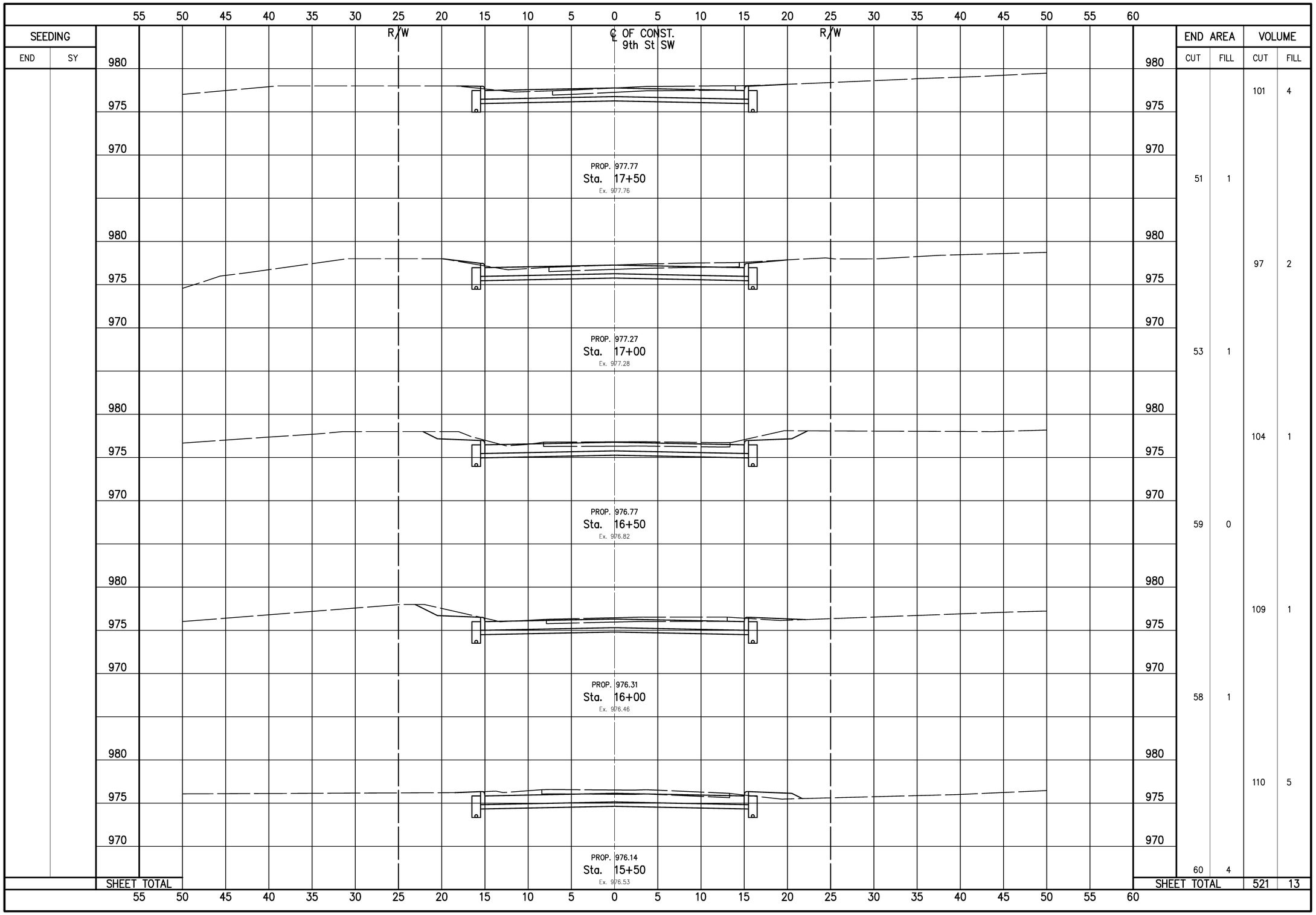

NW NE SW SE N

VERTICAL IN FEET 5 2.5 0

0 2.5 5
HORIZONTAL SCALE IN FEET

CHECKED BY: KAD
DATE: Sept, 2012
DRAWN BY: FPW
DATE: Sept, 2012

REVISIONS:

DATE	DESCRIPTION

9th St. SW Improvement Project
9th St SW Cross Section (Sta. 15+50 to Sta. 17+50)
City of Massillon
Stark County, Ohio

Kathy Catazaro-Perry, Mayor
Massillon
City of Champions

DRAWING NAME: SHT20-9thXS4.dwg
CITY NUMBER: 09st01

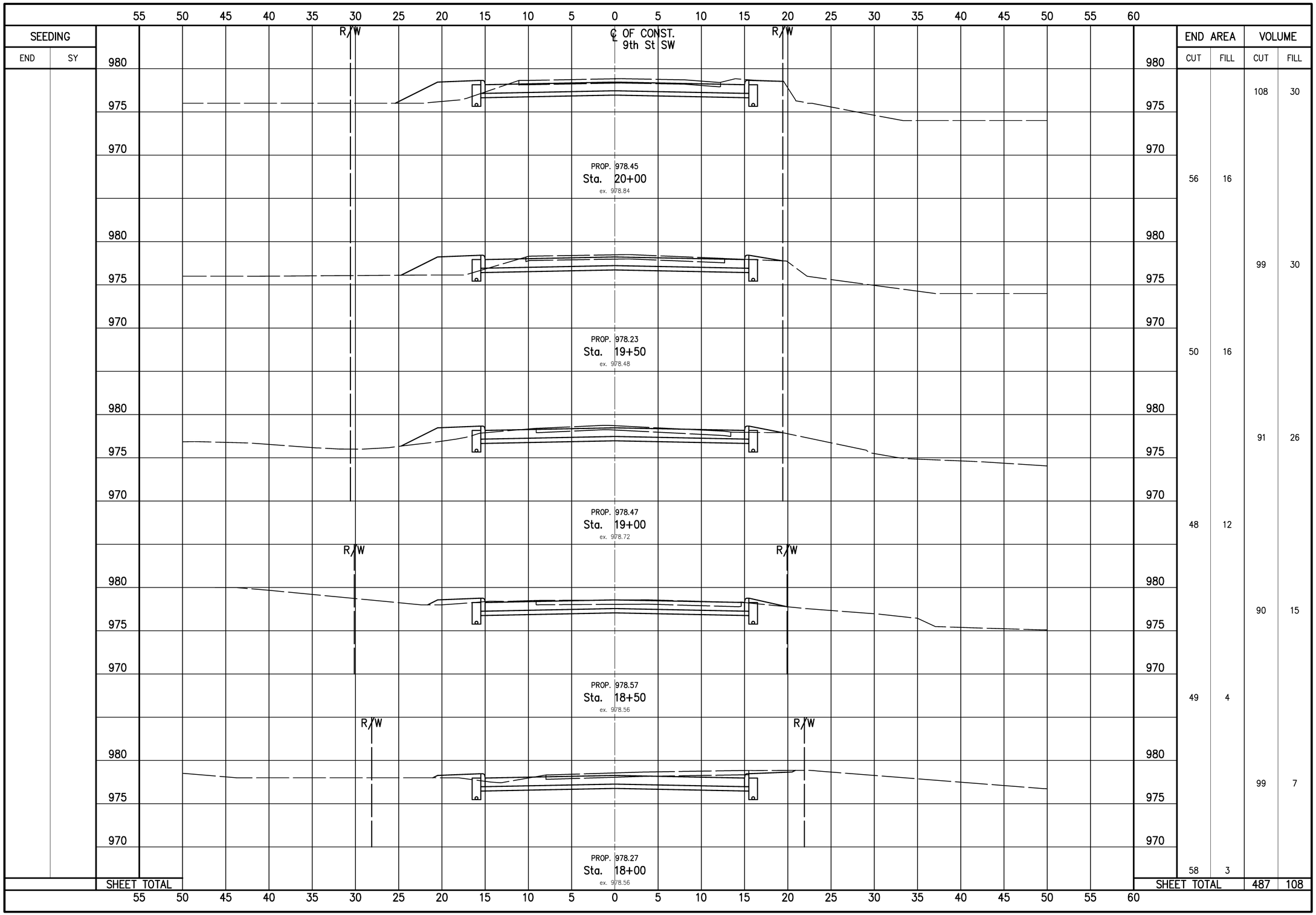
55 50 45 40 35 30 25 20 15 10 5 0 5 10 15 20 25 30 35 40 45 50 55 60
SEEDING
END
SY
R/W
℄ OF CONST.
9th St SW
980
975
970
PROP. 978.45
Sta. 20+00
ex. 978.84
PROP. 978.23
Sta. 19+50
ex. 978.48
PROP. 978.47
Sta. 19+00
ex. 978.72
PROP. 978.57
Sta. 18+50
ex. 978.56
PROP. 978.27
Sta. 18+00
ex. 978.56
END AREA
CUT
FILL
56 16
50 16
48 12
49 4
58 3
VOLUME
CUT
FILL
108 30
99 30
91 26
90 15
99 7
SHEET TOTAL
487 108
NW
NE
SW
SE
N
VERTICAL IN FEET
5
2.5
0
HORIZONTAL SCALE IN FEET
CHECKED BY:
KAD
DATE:
Sept, 2012
DRAWN BY:
FPW
DATE:
Sept, 2012
REVISIONS:
DATE
DESCRIPTION
9th St. SW Improvement Project
9th St SW Cross Section (Sta. 18+00 to Sta. 20+00)
City of Massillon
Stark County, Ohio
Kathy Catazaro-Perry, Mayor
Massillon
City of Champions
DRAWING NAME:
SHT21-9thXS5.dwg
CITY NUMBER:
09st01
21 / 43

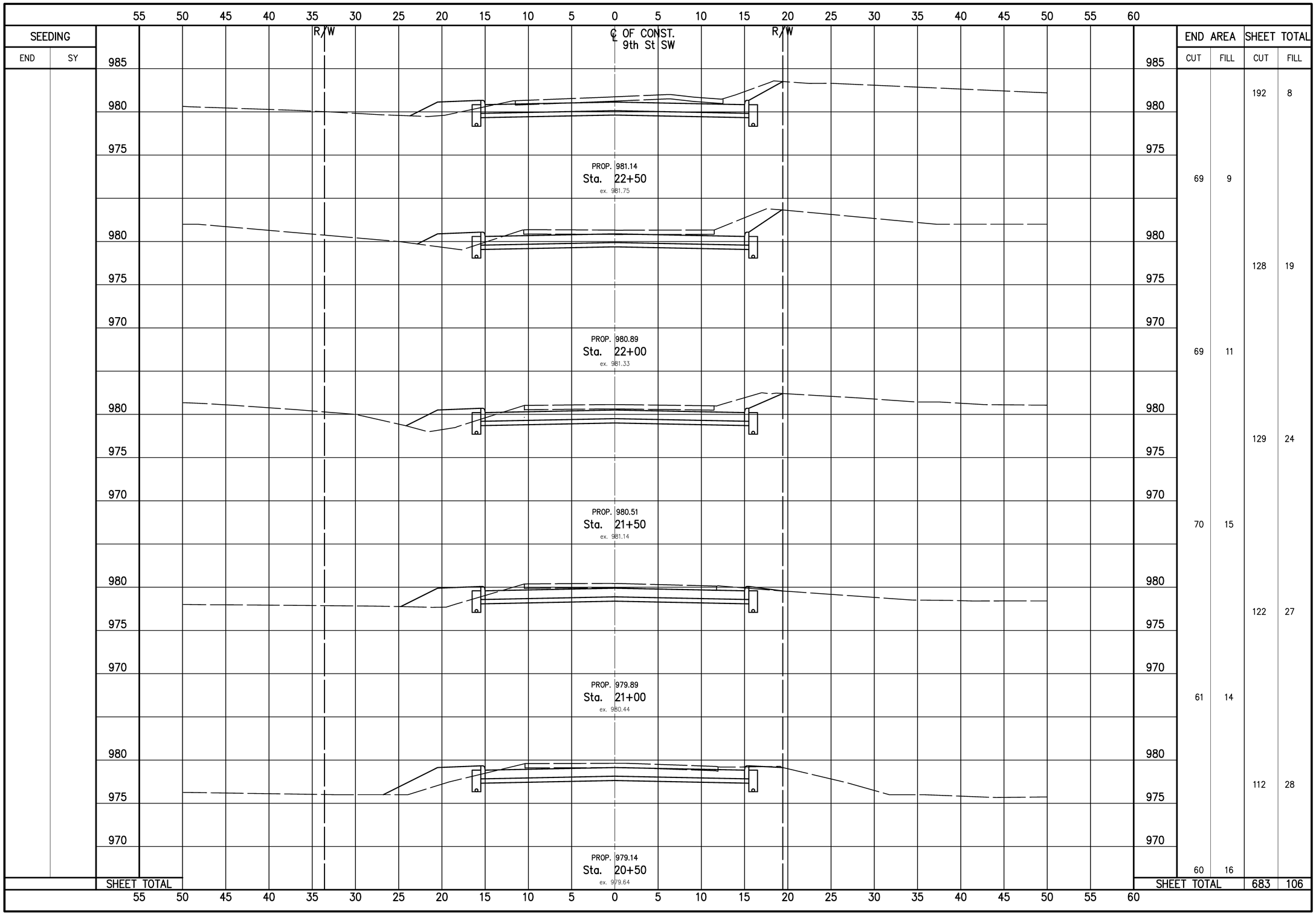

NW NE SW SE

VERTICAL IN FEET 5 2.5 0

0 2.5 5
HORIZONTAL SCALE IN FEET

CHECKED BY: KAD
DATE: Sept, 2012
DRAWN BY: FPW
DATE: Sept, 2012

REVISIONS:

DATE	DESCRIPTION

9th St. SW Improvement Project
9th St SW Cross Section (Sta. 20+50 to Sta. 22+50)
City of Massillon
Stark County, Ohio

Kathy Catazaro-Perry, Mayor
Massillon City of Champions

DRAWING NAME: SHT22-9thXS6.dwg
CITY NUMBER: 09st01

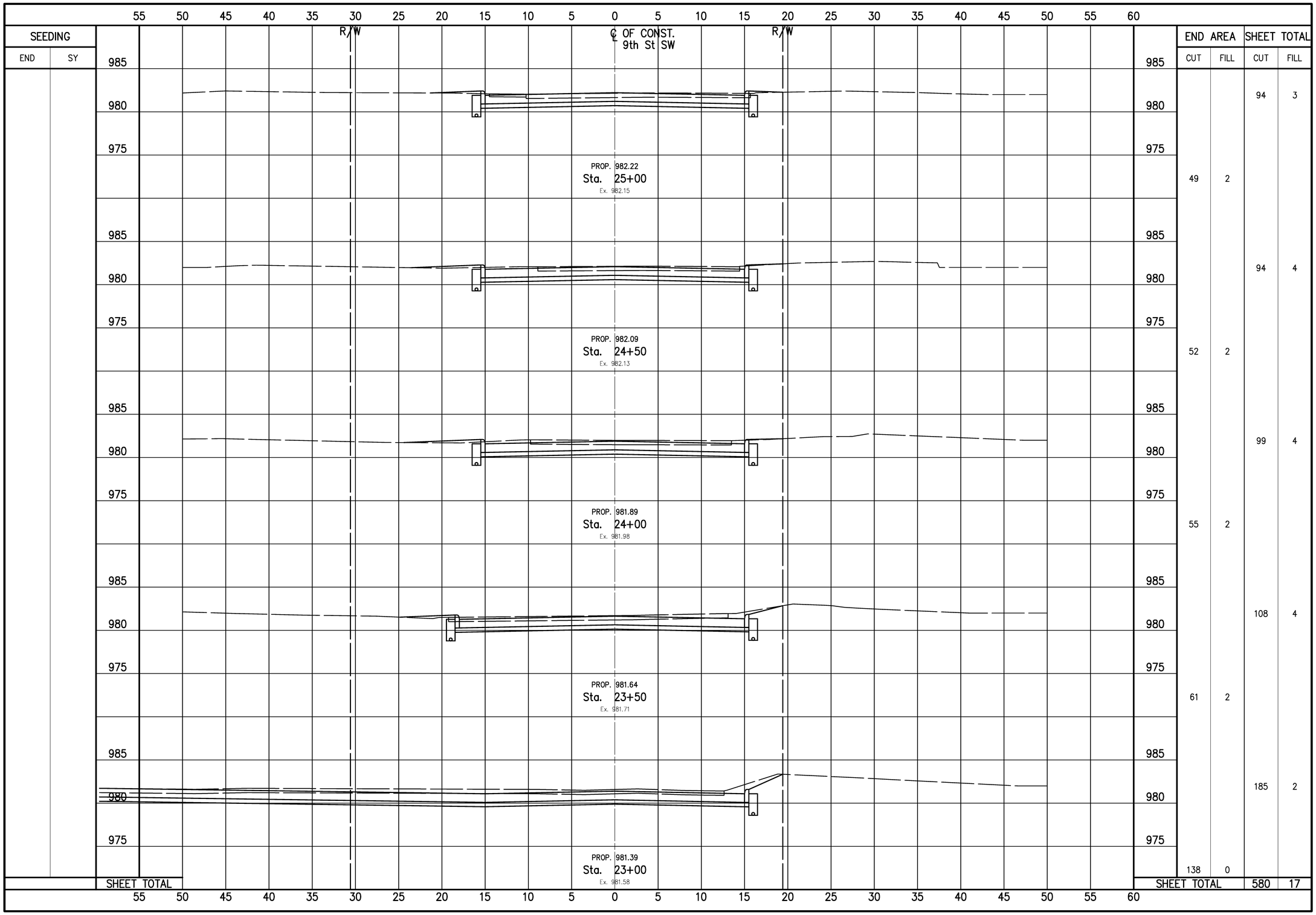

NW NE SW SE N

VERTICAL IN FEET 5 2.5 0

0 2.5 5
HORIZONTAL SCALE IN FEET

CHECKED BY: KAD
DATE: Sept, 2012
DRAWN BY: FPW
DATE: Sept, 2012

REVISIONS:

DATE	DESCRIPTION

9th St. SW Improvement Project
9th St SW Cross Section (Sta. 8+00 to Sta. 10+00)
City of Massillon
Stark County, Ohio

Kathy Catazaro-Perry, Mayor
Massillon
City of Champions

DRAWING NAME: SHT23-9thXS7.dwg
CITY NUMBER: 09st01

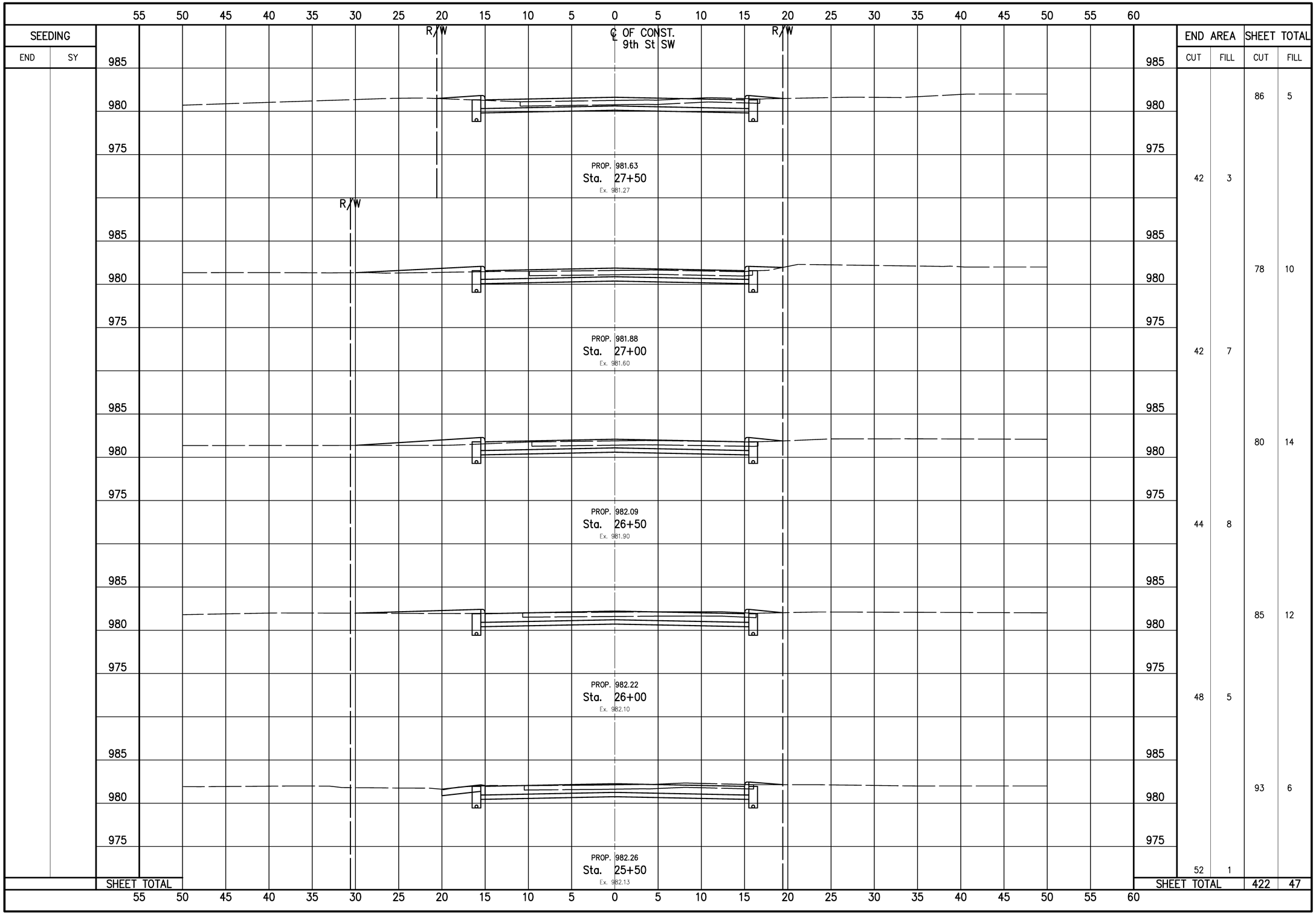

NW NE SW SE N

VERTICAL IN FEET 5 2.5 0

0 2.5 5
HORIZONTAL SCALE IN FEET

CHECKED BY: KAD
DATE: Sept, 2012
DRAWN BY: FPW
DATE: Sept, 2012

REVISIONS:
DATE | DESCRIPTION

9TH St SW Improvement Project
9th St SW Cross Section (Sta. 25+50 to Sta. 27+50)
City of Massillon
Stark County, Ohio

Kathy Catazaro-Perry, Mayor
Massillon City of Champions

DRAWING NAME: SHT24-9thXS8.dwg
CITY NUMBER: 09st01

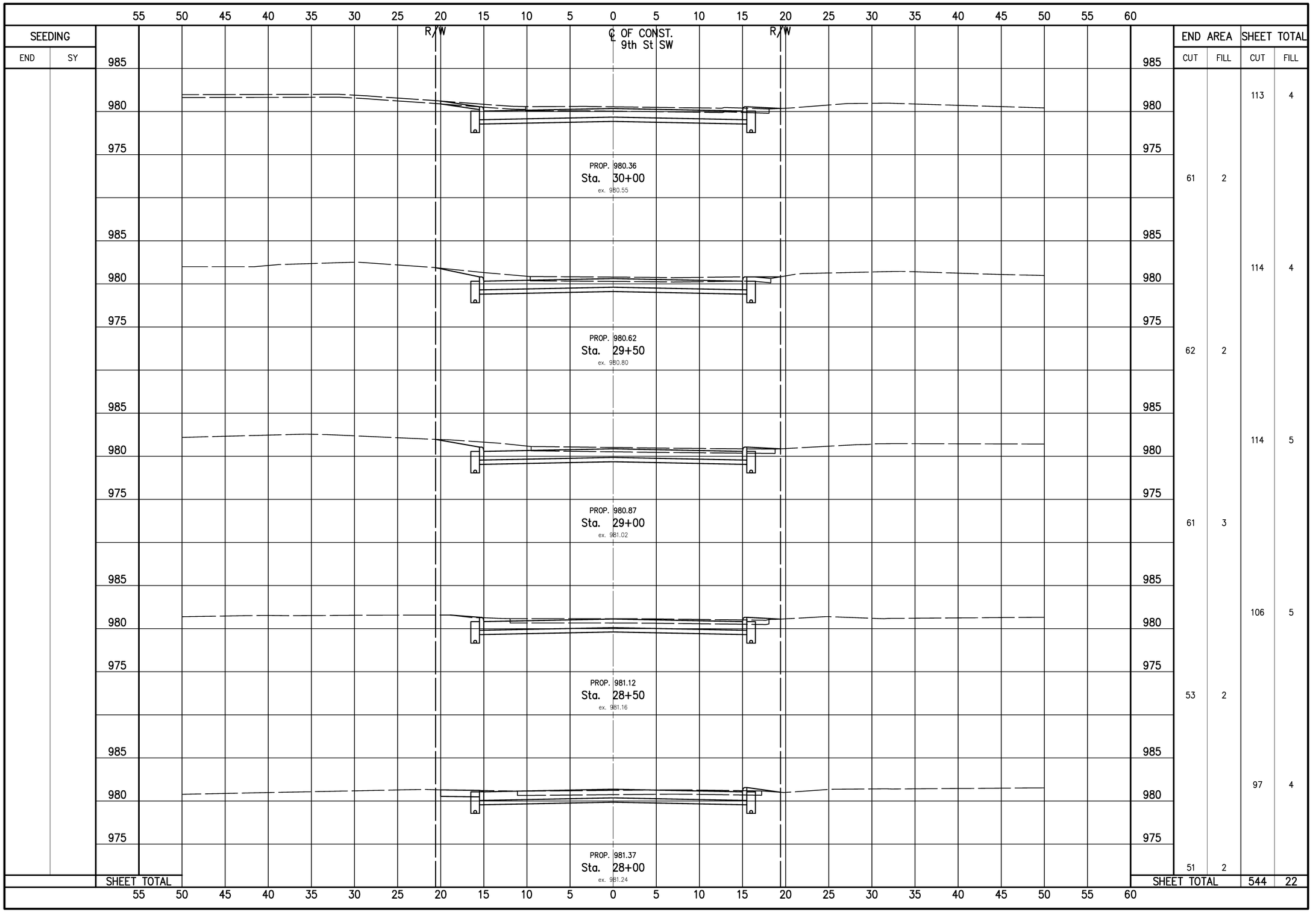
55 50 45 40 35 30 25 20 15 10 5 0 5 10 15 20 25 30 35 40 45 50 55 60
SEEDING
END
SY
R/W
℄ OF CONST.
9th St SW
R/W
985
980
975
PROP. 980.36
Sta. 30+00
ex. 980.55
PROP. 980.62
Sta. 29+50
ex. 980.80
PROP. 980.87
Sta. 29+00
ex. 981.02
PROP. 981.12
Sta. 28+50
ex. 981.16
PROP. 981.37
Sta. 28+00
ex. 981.24
END AREA
CUT
FILL
61
2
62
2
61
3
53
2
51
2
SHEET TOTAL
CUT
FILL
113
4
114
4
114
5
106
5
97
4
544
22
SHEET TOTAL
NW
NE
SW
SE
N
VERTICAL IN FEET
5
2.5
0
HORIZONTAL SCALE IN FEET
0 2.5 5
CHECKED BY:
KAD
DATE:
Sept, 2012
DRAWN BY:
FPW
DATE:
Sept, 2012
REVISIONS:
DATE
DESCRIPTION
9TH St SW Improvement Project
9th St SW Cross Section (Sta. 28+00 to Sta. 30+00)
City of Massillon
Stark County, Ohio
Kathy Catazaro-Perry, Mayor
Massillon
City of Opportunity
DRAWING NAME:
SHT25-9thXS9.dwg
CITY NUMBER:
09st01
25 / 43

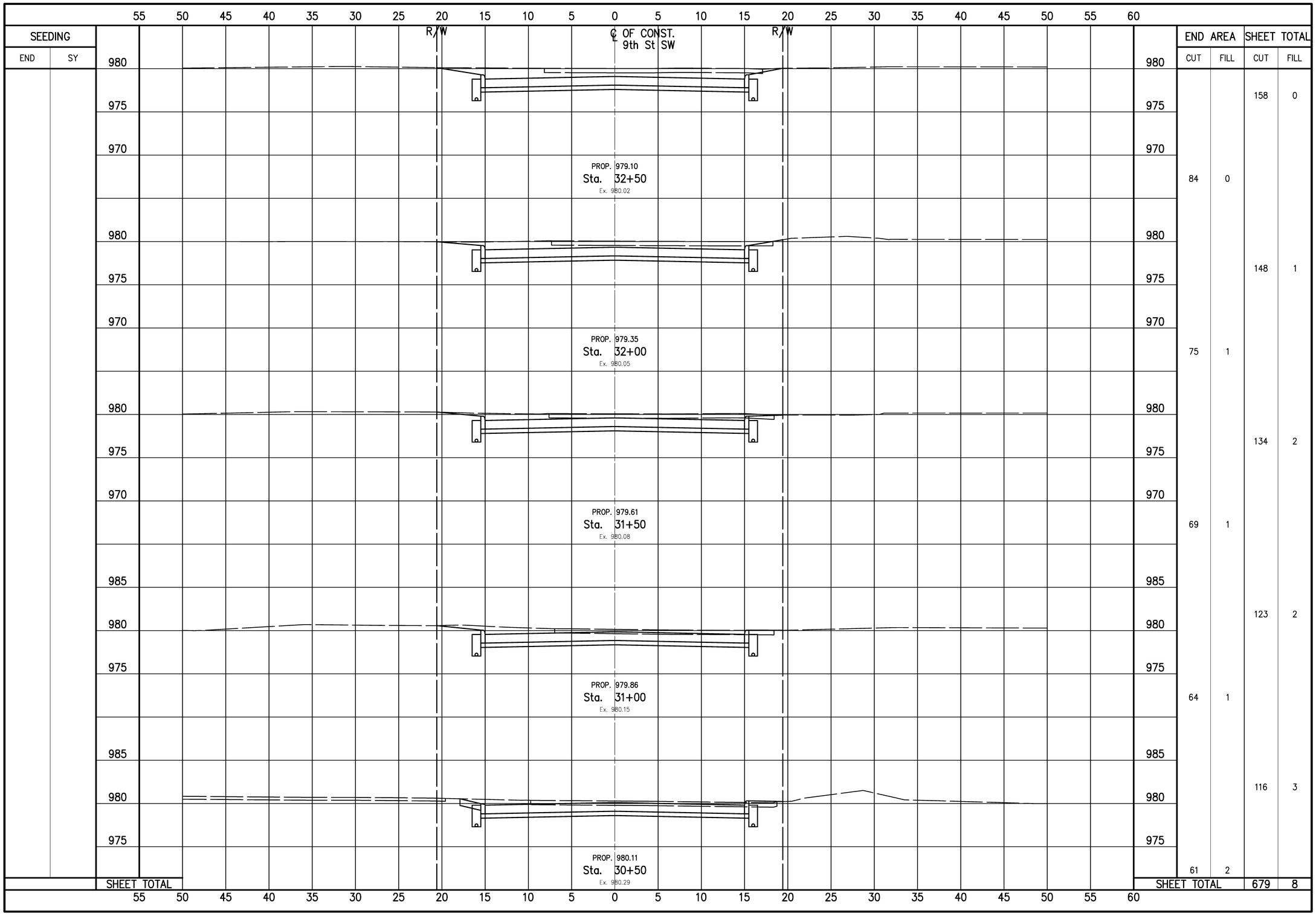

SEEDING		END AREA		SHEET TOTAL	
END	SY	CUT	FILL	CUT	FILL
		84	0	158	0
		75	1	148	1
		69	1	134	2
		64	1	123	2
		61	2	116	3
SHEET TOTAL				679	8

VERTICAL IN FEET 5 2.5 0

0 2.5 5
HORIZONTAL SCALE IN FEET

CHECKED BY: KAD
DATE: Sept, 2012
DRAWN BY: FPW
DATE: Sept, 2012

REVISIONS:

DATE	DESCRIPTION

9TH St SW Improvement Project
9th St SW Cross Section (Sta. 30+50 to Sta. 32+50)
City of Massillon
Stark County, Ohio

Kathy Catazaro-Perry, Mayor
Massillon City of Champions

DRAWING NAME: SHT26-9thXS10.dwg
CITY NUMBER: 09st01

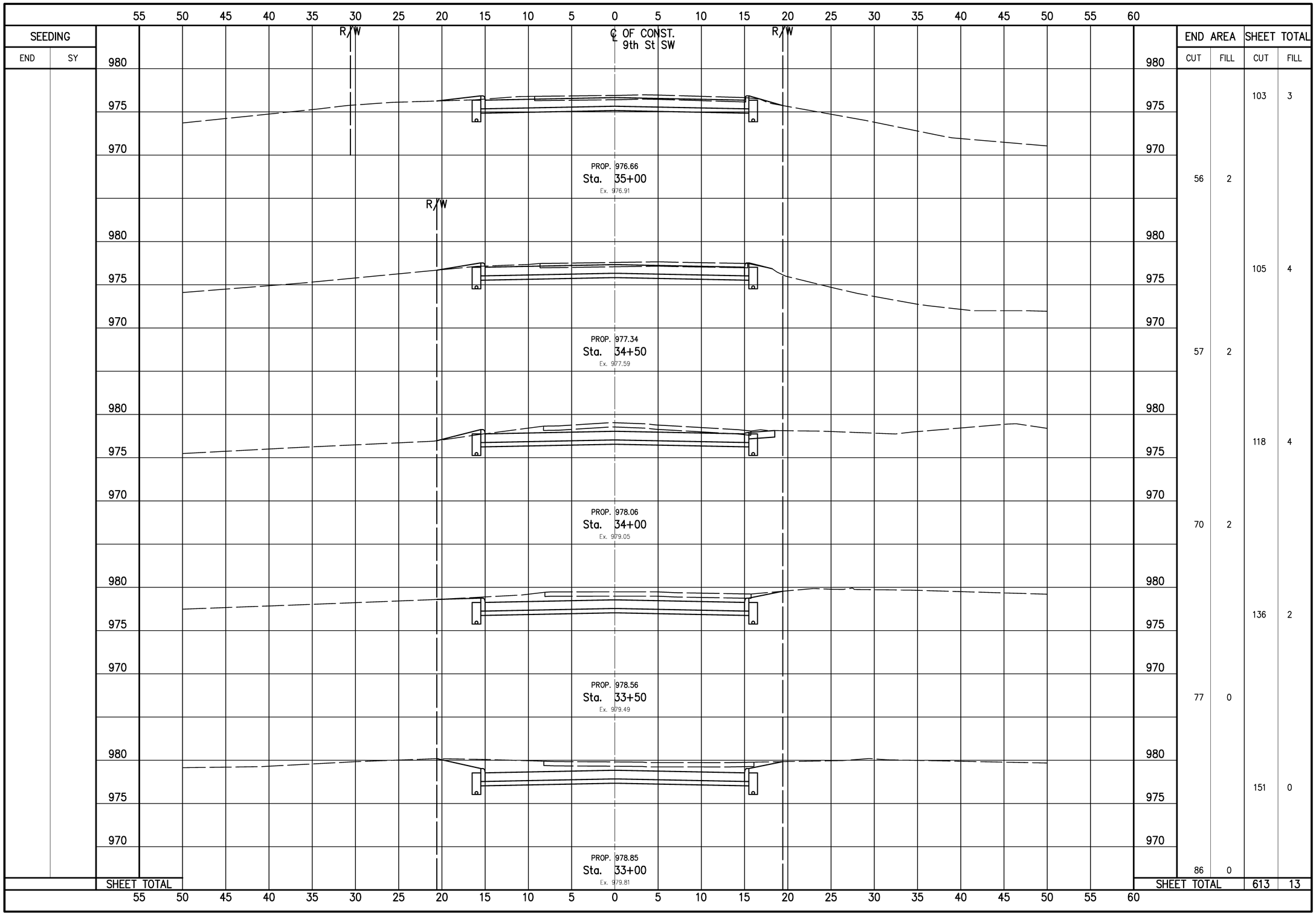

NW NE SW SE

VERTICAL IN FEET 5 2.5 0

0 2.5 5
HORIZONTAL SCALE IN FEET

CHECKED BY: KAD
DATE: Sept, 2012
DRAWN BY: FPW
DATE: Sept, 2012

REVISIONS:

DATE	DESCRIPTION

9TH St SW Improvement Project

9th St SW Cross Section (Sta. 33+00 to Sta. 35+00)

City of Massillon
Stark County, Ohio

Kathy Catazaro-Perry, Mayor

Massillon City of Champions

DRAWING NAME: SHT27-9thXS11.dwg
CITY NUMBER: 09st01

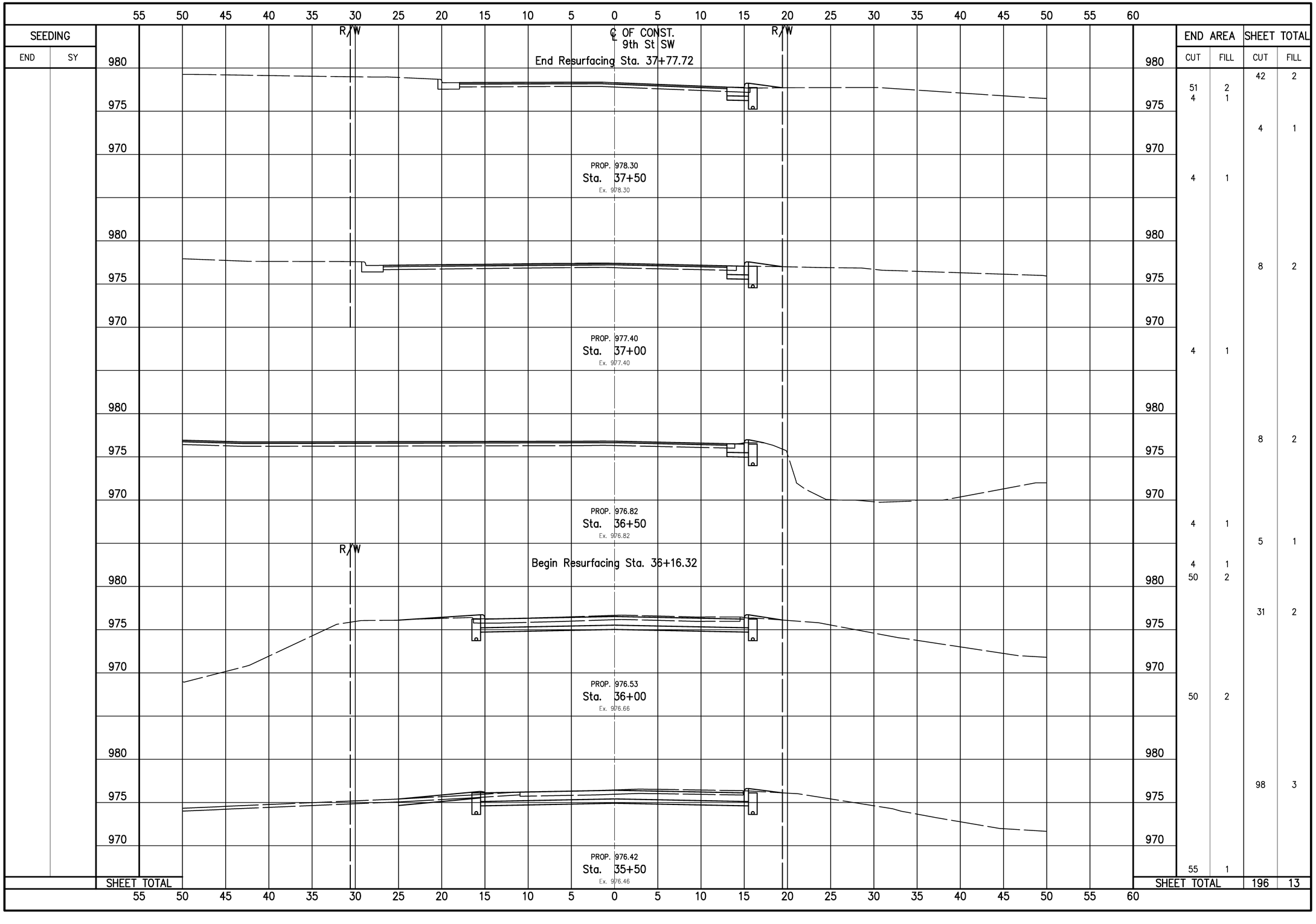
SEEDING
END
SY
55 50 45 40 35 30 25 20 15 10 5 0 5 10 15 20 25 30 35 40 45 50 55 60
R/W
℄ OF CONST.
9th St SW
End Resurfacing Sta. 37+77.72
980
975
970
PROP. 978.30
Sta. 37+50
Ex. 978.30
PROP. 977.40
Sta. 37+00
Ex. 977.40
PROP. 976.82
Sta. 36+50
Ex. 976.82
Begin Resurfacing Sta. 36+16.32
PROP. 976.53
Sta. 36+00
Ex. 976.66
PROP. 976.42
Sta. 35+50
Ex. 976.46
END AREA
CUT FILL
51 2
4 1
4 1
4 1
4 1
4 1
50 2
50 2
55 1
SHEET TOTAL
CUT FILL
42 2
4 1
8 2
8 2
5 1
31 2
98 3
196 13
NW NE SW SE
VERTICAL IN FEET
0 2.5 5
HORIZONTAL SCALE IN FEET
CHECKED BY: KAD
DATE: Sept, 2012
DRAWN BY: FPW
DATE: Sept, 2012
REVISIONS:
DATE DESCRIPTION
9TH St SW Improvement Project
9th St SW Cross Section (Sta. 35+50 to Sta. 37+50)
City of Massillon
Stark County, Ohio
Kathy Catazaro-Perry, Mayor
Massillon
City of Champions
DRAWING NAME: SHT28-9thXS12.dwg
CITY NUMBER: 09st01
28 / 43

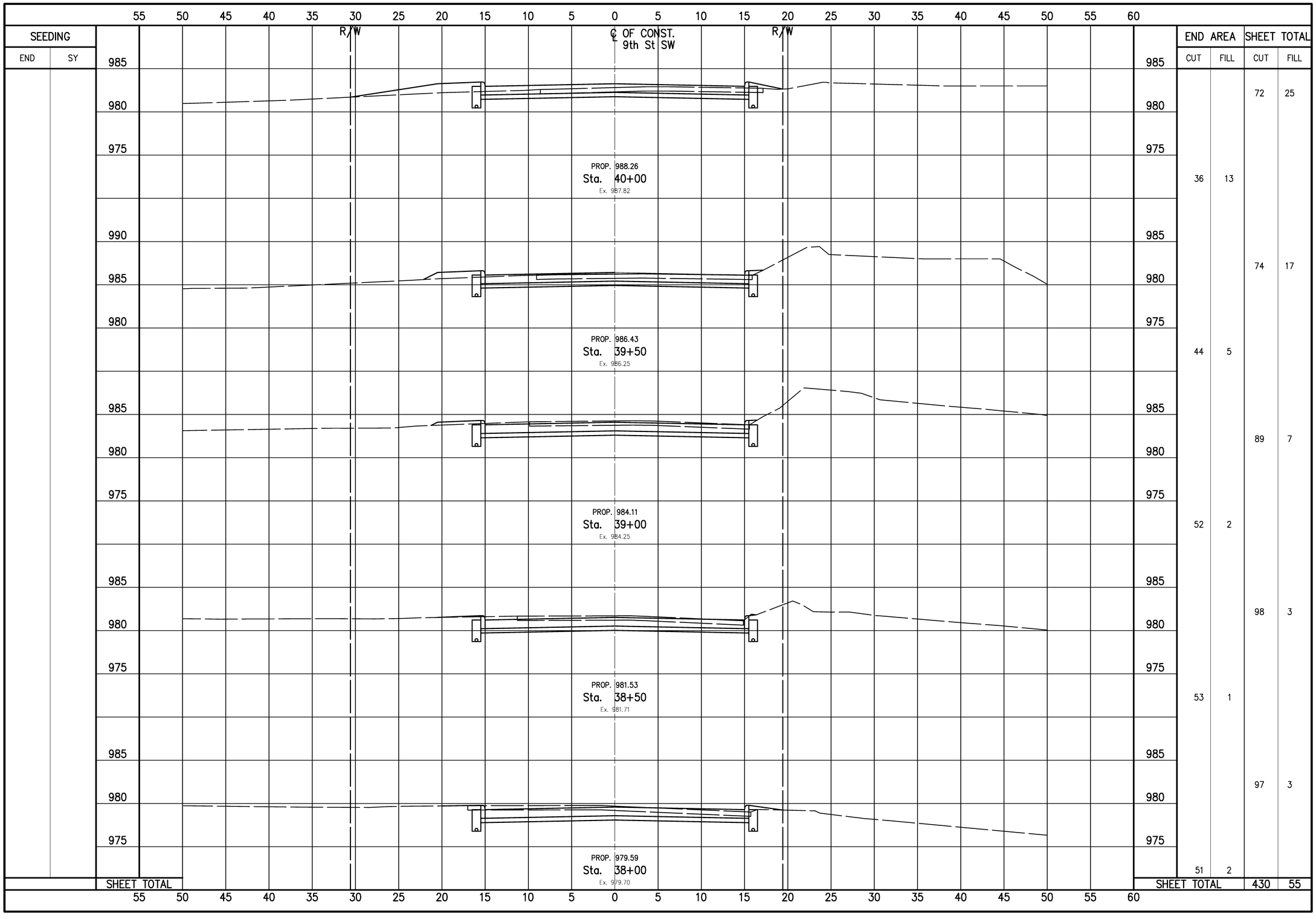
55 50 45 40 35 30 25 20 15 10 5 0 5 10 15 20 25 30 35 40 45 50 55 60
SEEDING
END
SY
R/W
℄ OF CONST.
9th St SW
R/W
985
980
975
PROP. 988.26
Sta. 40+00
Ex. 987.82
990
985
980
975
PROP. 986.43
Sta. 39+50
Ex. 986.25
985
980
975
PROP. 984.11
Sta. 39+00
Ex. 984.25
985
980
975
PROP. 981.53
Sta. 38+50
Ex. 981.71
985
980
975
PROP. 979.59
Sta. 38+00
Ex. 979.70
SHEET TOTAL
END AREA
CUT
FILL
36
13
44
5
52
2
53
1
51
2
SHEET TOTAL
CUT
FILL
72
25
74
17
89
7
98
3
97
3
430
55
NW
NE
SW
SE
N
VERTICAL IN FEET
5
2.5
0
0
2.5
5
HORIZONTAL SCALE IN FEET
CHECKED BY:
KAD
DATE:
Sept, 2012
DRAWN BY:
FPW
DATE:
Sept, 2012
REVISIONS:
DATE
DESCRIPTION
9TH St SW Improvement Project
9th St SW Cross Section (Sta. 38+00 to Sta. 40+00)
City of Massillon
Stark County, Ohio
Kathy Catazaro-Perry, Mayor
Massillon
City of Champions
DRAWING NAME:
SHT29-9thXS13.dwg
CITY NUMBER:
09st01
29 / 43

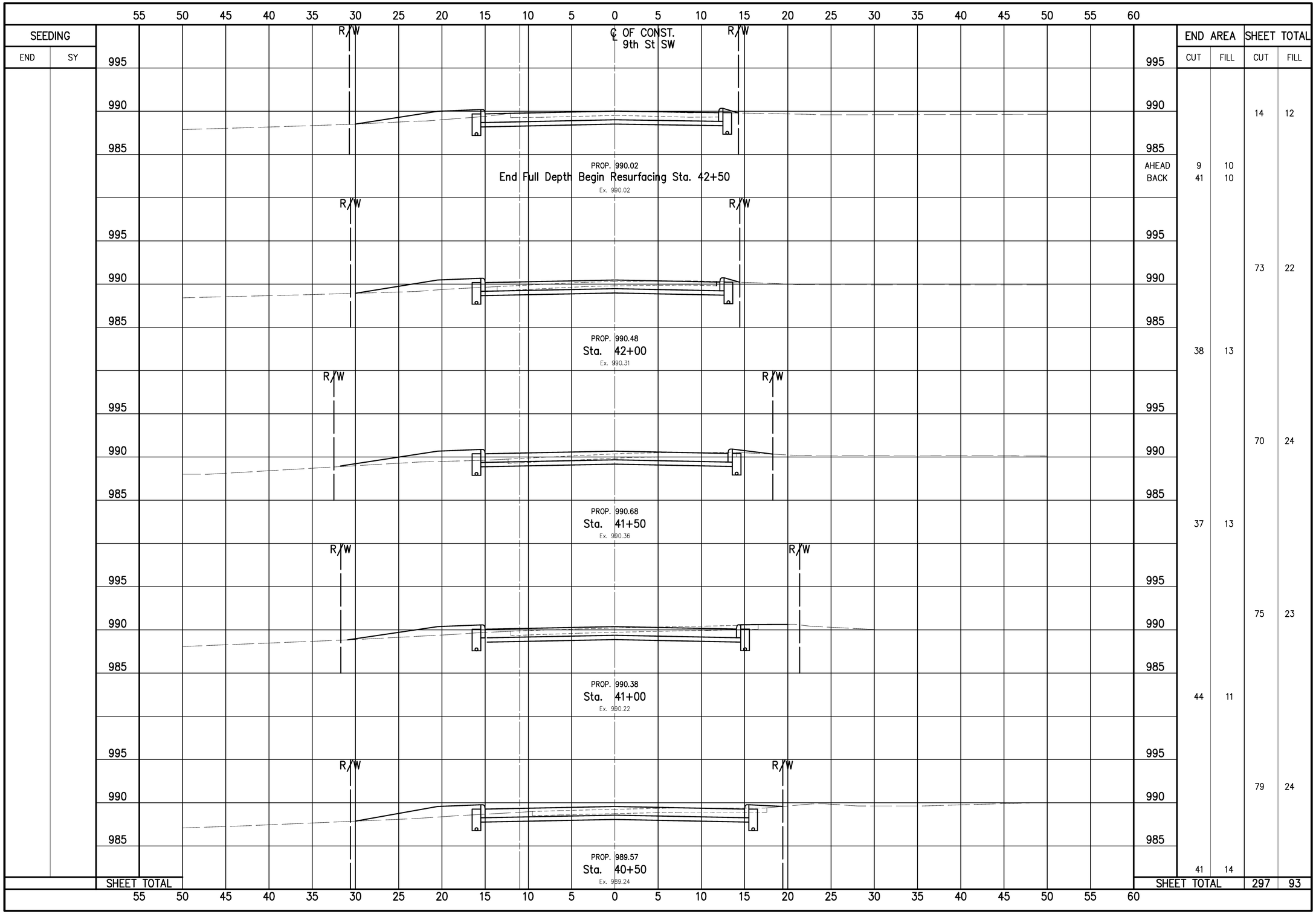
55 50 45 40 35 30 25 20 15 10 5 0 5 10 15 20 25 30 35 40 45 50 55 60
SEEDING
END
SY
R/W
℄ OF CONST.
9th St SW
995
990
985
PROP. 990.02
End Full Depth Begin Resurfacing Sta. 42+50
Ex. 990.02
PROP. 990.48
Sta. 42+00
Ex. 990.31
PROP. 990.68
Sta. 41+50
Ex. 990.36
PROP. 990.38
Sta. 41+00
Ex. 990.22
PROP. 989.57
Sta. 40+50
Ex. 989.24
SHEET TOTAL
END AREA
CUT
FILL
AHEAD 9 10
BACK 41 10
38 13
37 13
44 11
41 14
SHEET TOTAL
SHEET TOTAL
CUT
FILL
14 12
73 22
70 24
75 23
79 24
297 93
NW
NE
SW
SE
N
VERTICAL IN FEET
5
2.5
0
HORIZONTAL SCALE IN FEET
CHECKED BY:
KAD
DATE:
Sept, 2012
DRAWN BY:
FPW
DATE:
Sept, 2012
REVISIONS:
DATE
DESCRIPTION
9TH St SW Improvement Project
9th St SW Cross Section (Sta. 40+50 to Sta. 42+50)
City of Massillon
Stark County, Ohio
Kathy Catazaro-Perry, Mayor
Massillon
City of Champions
DRAWING NAME:
SHT30-9th14.dwg
CITY NUMBER:
09st01
30 / 43

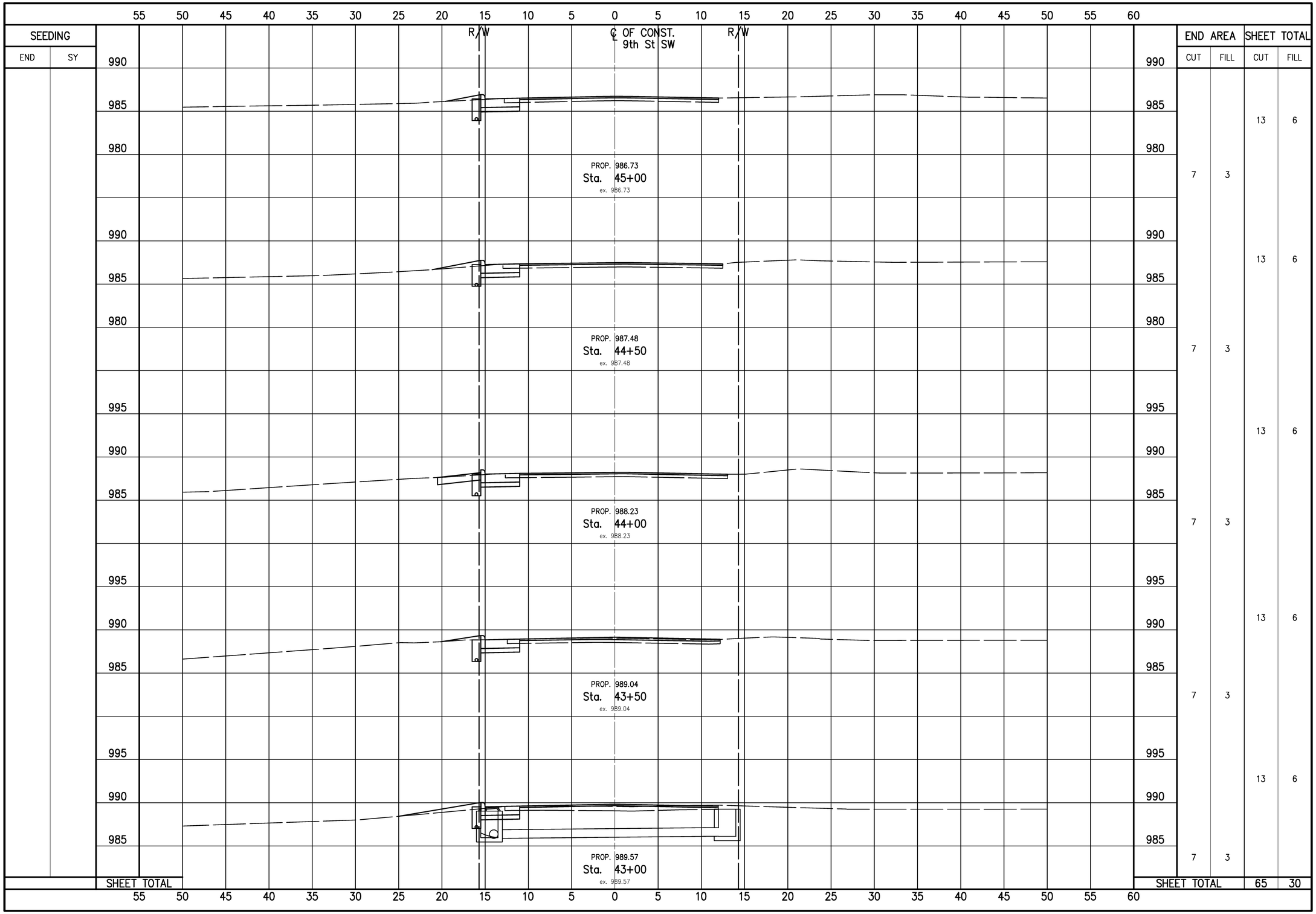

NW NE SW SE N

VERTICAL IN FEET 5 2.5 0

0 2.5 5
HORIZONTAL SCALE IN FEET

CHECKED BY: KAD
DATE: Sept, 2012
DRAWN BY: FPW
DATE: Sept, 2012

REVISIONS:

DATE	DESCRIPTION

9TH St SW Improvement Project
9th St SW Cross Section (Sta. 43+00 to Sta. 45+00)
City of Massillon
Stark County, Ohio

Kathy Catazaro-Perry, Mayor
Massillon
City of Champions

DRAWING NAME: SHT31-9thXS15.dwg
CITY NUMBER: 09st01

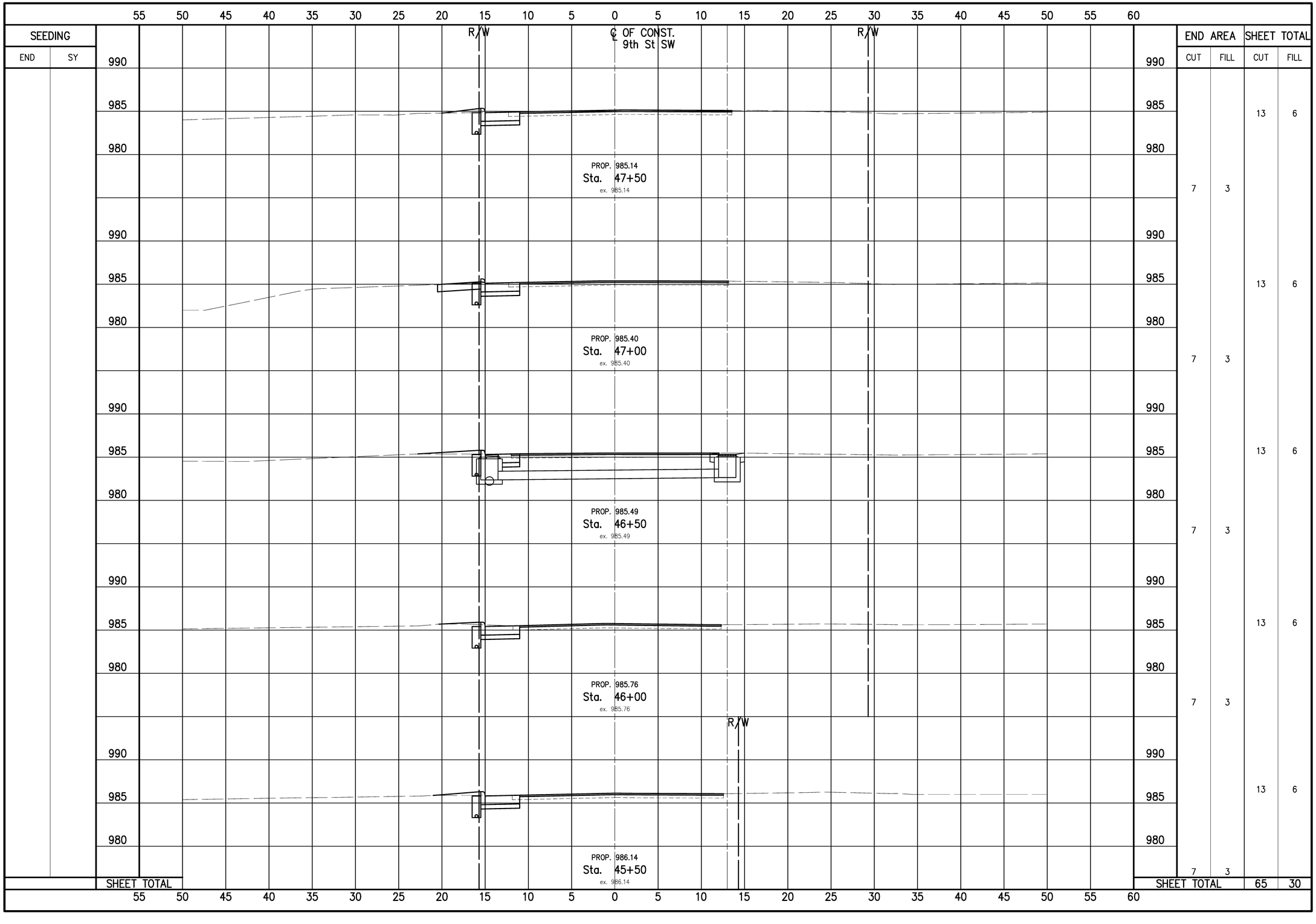

NW NE SW SE N

VERTICAL IN FEET 5 2.5 0

0 2.5 5
HORIZONTAL SCALE IN FEET

CHECKED BY: KAD
DATE: Sept, 2012
DRAWN BY: FPW
DATE: Sept, 2012

REVISIONS:

DATE	DESCRIPTION

9TH St SW Improvement Project

9th St SW Cross Section (Sta. 45+50 to Sta. 47+50)

City of Massillon
Stark County, Ohio

Kathy Catazaro-Perry, Mayor
Massillon City of Champions

DRAWING NAME: SHT32-9thXS16.dwg
CITY NUMBER: 09ST01

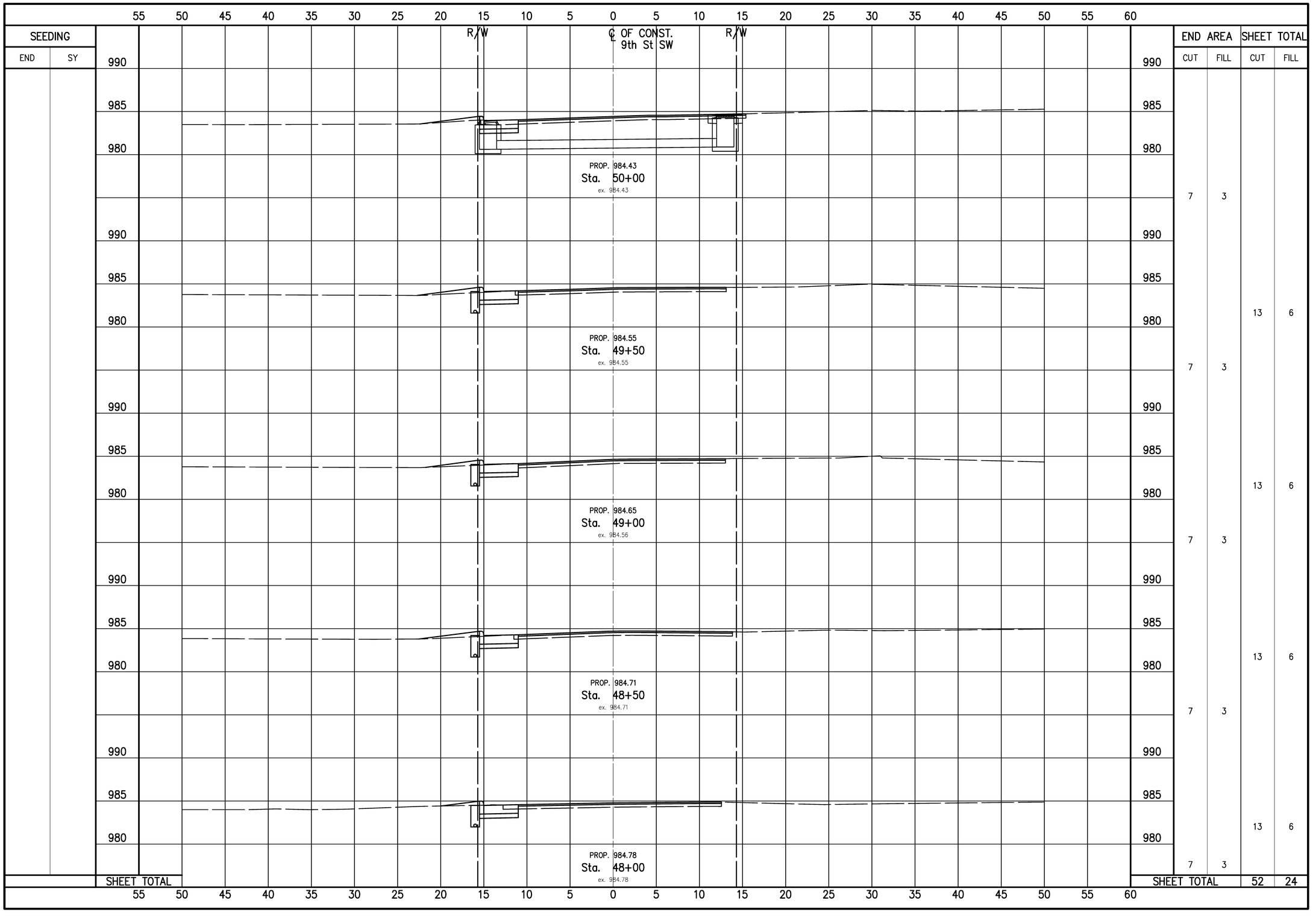

NW NE SW SE N

VERTICAL IN FEET 5 2.5 0

0 2.5 5
HORIZONTAL SCALE IN FEET

CHECKED BY: KAD
DATE: Sept, 2012
DRAWN BY: FPW
DATE: Sept, 2012

REVISIONS:

DATE	DESCRIPTION

9TH St SW Improvement Project
9th St SW Cross Section (Sta. 48+00 to Sta. 50+00)
City of Massillon
Stark County, Ohio

Kathy Catazaro-Perry, Mayor
Massillon
City of Opportunity

DRAWING NAME: SHT33-9thXS17.dwg
CITY NUMBER: 09ST01

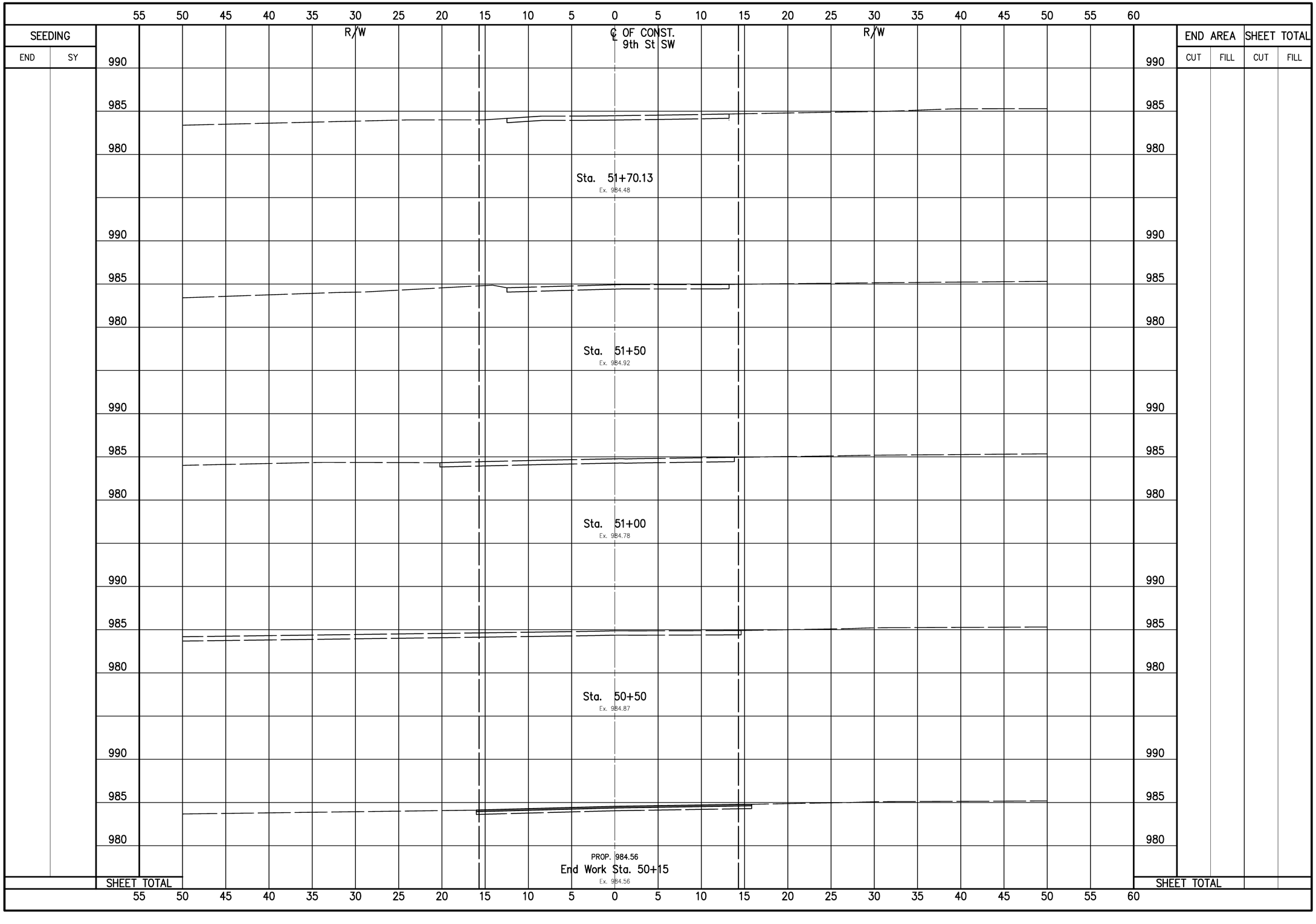

NW NE SW SE N

VERTICAL IN FEET 5 2.5 0

0 2.5 5
HORIZONTAL SCALE IN FEET

CHECKED BY: KAD
DATE: MAY, 2014
DRAWN BY: FPW
DATE: MAY, 2014

REVISIONS:

DATE	DESCRIPTION

9TH St SW Improvement Project
9th St SW Cross Section (Sta. 50+10 to Sta. 51+70.13)
City of Massillon
Stark County, Ohio

Kathy Catazaro-Perry, Mayor
Massillon
City of Champions

DRAWING NAME: SHT34-9thXS18.dwg
CITY NUMBER: 09ST01

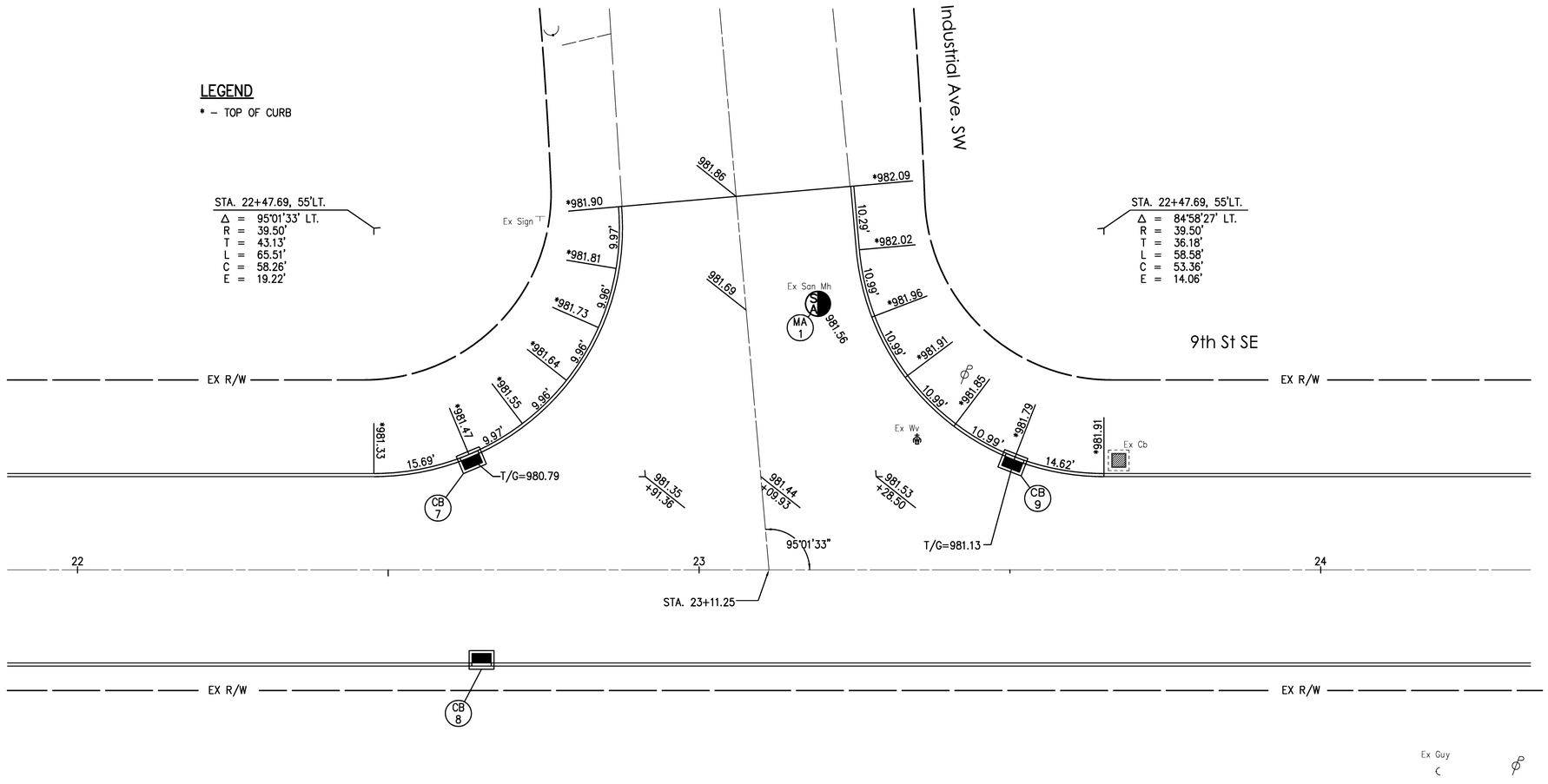

ITEM 251 – PARTIAL DEPTH PAVEMENT

A QUANTITY OF THIS ITEM SHALL BE PROVIDED FOR USE AS DIRECTED BT THE ENGINEER. THE ITEM SHALL CONSIST OF REPAIRING EXISTING LOCATIONS EXHIBITING SURFACE DETERIORATION AND PLACING 3"± OF ITEM 448 ASPHALT CONCRETE, TYPE 2. THE ASPHALT CONCRETE SHALL BE COMPACTED WITH A TYPE 1 PNEUMATIC TIRE ROLLER AND A STEEL WHEEL ROLLER AS PER 401.13. IT IS NOT THE INTENT TO REPAIR EVERY DETERIORATED AREA WITHIN THE PROJECT. THE ENGINEER SHALL DETERMINE WHICH AREAS ARE TO BE REPAIRED. THIS ITEM SHALL BE PERFORMED WITHIN 7 DAYS AFTER THE COMPLETION OF MAINLINE PAVEMENT PLANING. PAYMENT SHALL BE BASE ON THE ACTUAL NUMBER OF SQUARE YARDS OF PAVEMENT REPAIR. THE FOLLOWING ESTIMATED QUANTITY HAS BEEN CARRIED TO THE BID TAB.

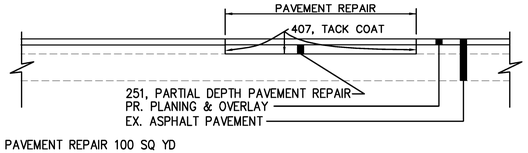

ITEM 251 – PARTIAL DEPTH PAVEMENT REPAIR 100 SQ YD

ITEM 253 – PAVEMENT REPAIR

A QUANTITY OF THIS ITEM SHALL BE PROVIDED FOR USE AS DIRECTED BY THE ENGINEER. THIS ITEM SHALL CONSIST OF CUTTING AND REMOVING DETERIORATED PAVEMENT FULL DEPTH AND PLACING 12"± 301 ASPHALT CONCRETE BASE, PG64–22. THE MAXIMUM COMPACTED DEPTH OF ANY ONE LAYER SHALL BE 6 INCHES. UNLESS OTHERWISE DIRECTED BY THE ENGINEER, THIS ITEM SHALL BE PERFORMED AFTER THE COMPLETION OF MAINLINE PAVEMENT PLANING. ALSO, THIS ITEM SHALL COMMENCE WITHIN 7 DAYS OF THE COMPLETION OF THE MAINLINE PAVEMENT PLANING. IT IS NOT THE INTENT TO REPAIR EVERY DETERIORATED AREA WITHIN THE PROJECT. THE ENGINEER SHALL DETERMINE WHICH AREAS ARE TO BE REPAIRED. PAYMENT SHALL BE BASED ON THE ACTUAL NUMBER OF SQUARE YARDS OF PAVEMENT REMOVED AND REPLACED TO THE LIMITS DESIGNATED BY THE ENGINEER. THE FOLLOWING ESTIMATED QUANTITY HAS BEEN INCLUDED IN THE BID FORM.

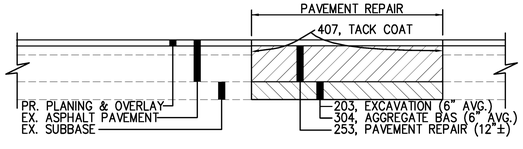

ITEM 253, PAVEMENT REPAIR 100 SQ YD

VERTICAL IN FEET 0 5 10

HORIZONTAL SCALE IN FEET 0 5 10

CHECKED BY: KAD
DATE: Sept, 2012
DRAWN BY: FPW
DATE: Sept, 2012

REVISIONS:

DATE	DESCRIPTION

9th St. SW Intersection Project
9th St. SW and Industrial Ave SW Intersection Details
City of Massillon
Stark County, Ohio

Kathy Catazaro-Perry, Mayor
Massillon City of Opportunity

DRAWING NAME: SHT35–9thintdetl1.dwg
CITY NUMBER: 09st01

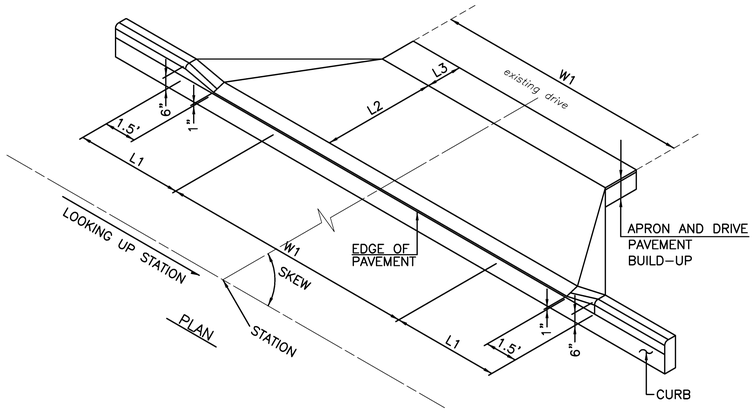

DRIVE ALONG CURBED AREA

NOT TO SCALE

APRON AND DRIVE PAVEMENT BUILD-UP

A.	8"	452	PLAIN PORTLAND CEMENT CONCRETE
B.	2"	448	ASPHALT CONCRETE
	8"	301	BITUMINOUS AGGREGATE BASE

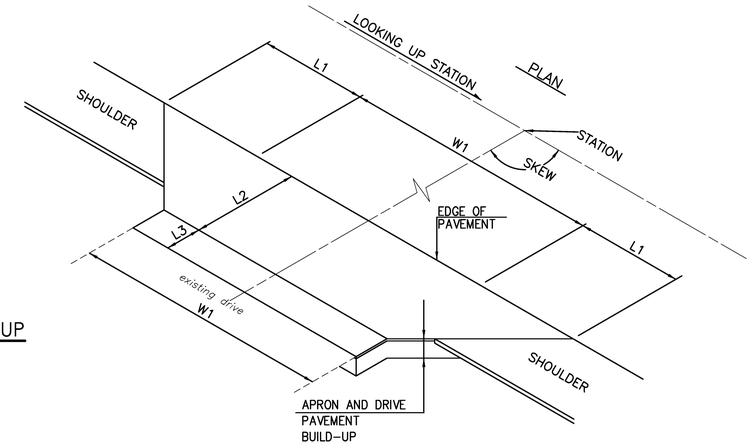

DRIVE ALONG NON-CURBED AREA

NOT TO SCALE

NOTES

1. TYPE A SHALL BE USED TO REPLACE ANY EXISTING CONCRETE DR.
2. TYPE B SHALL BE USED TO REPLACE ANY EXISTING DRIVE EXCEPT FOR CONCRETE.
3. ITEM 452SPEC. CONCRETE DRIVE AND ITEM 448SPEC. ASPHALT DRIVE SHALL INCLUDE ALL MATERIALS, LABOR, AND REMOVAL FOR PROPER INSTALLATION OF OF NEW APRONS AND DRIVES AS SHOWN ON THIS SHEET.

SHEET No.	REFERENCE No.	STATION	SIDE	DRIVE TYPE	SKEW	L1	L2	L3	W1	452SPEC CONCRETE DRIVE (A)	448SPEC ASPHALT DRIVE (B)	452SPEC CONCRETE DRIVE (A)	448SPEC ASPHALT DRIVE (B)
						FT.	FT.	FT.	FT.	S. Y.	S. Y.	S. Y.	S. Y.
		9th ST SW											
7	DR-1	9+50	RT.	COMM.	90°	3.75	5	AS DIRECTED BY ENGINEER	67.5		40	AS DIRECTED BY ENGINEER	AS DIRECTED BY ENGINEER
8	DR-2	14+45	LT.	COMM.	120°05'	10	5		10		17		
8	DR-3	15+09	RT.	COMM.	139°54'	10	7		14		19		
9	DR-4	17+45.5	RT.	COMM.	90°	5	5		50		31		
9	DR-5	18+76	LT.	COMM.	90°	5	8		17		20		
10	DR-6	25+43	LT.	COMM.	90°	5	5		56		34		
11	DR-7	28+09.5	LT.	COMM.	90°	5	5		38		24		
11	DR-8	30+30	LT.	COMM.	90°	5	5		31		20		
12	DR-9	33+95	RT.	COMM.	90°	4	3		17		9		
13	DR-10	35+57	LT.	COMM.	90°	10	10		36		52		
14	DR-11	43+33	LT.	COMM.	90°	5	5		29		21		
15	DR-12	44+04	LT.	COMM.	90°	5	5		19		15		
15	DR-13	47+05	LT.	COMM.	90°	5	5		40		26		
15	DR-14	47+65	LT.	COMM.	90°	5	5		12	13			
16	DR-15	49+21.5	LT.	COMM.	90°	5	5		17		14		
TOTAL										13	342	27	200

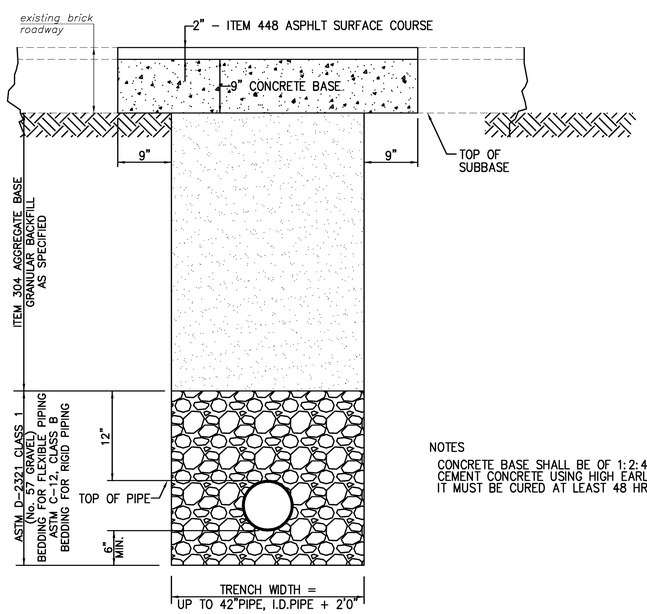

NOTES

CONCRETE BASE SHALL BE OF 1:2:4, 6 BAG MIX, PORTLAND CEMENT CONCRETE USING HIGH EARLY STRENGTH CEMENT AND IT MUST BE CURED AT LEAST 48 HRS.

TRENCH DETAIL

NOT TO SCALE

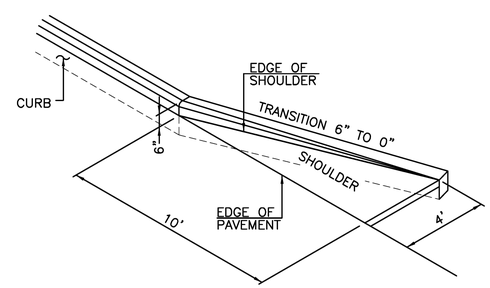

CURB TRANSITION DETAILS

NOT TO SCALE

VERTICAL IN FEET 10 5 0

HORIZONTAL SCALE IN FEET 0 5 10

CHECKED BY: KAD

DATE: Sept, 2012

DRAWN BY: FPW

DATE: Sept, 2012

REVISIONS: DATE | DESCRIPTION

9th St. SW Improvement Project

9th St. SW Miscellaneous Details

City of Massillon
Stark County, Ohio

Kathy Catazaro-Perry, Mayor

Massillon City of Champions

DRAWING NAME: SHT36-9thdrdetl.dwg

CITY NUMBER: 09st01

REF. No.	SIDE	STATION FROM	STATION TO	603 24" TYPE B CONDUIT	604 HEADWALL TYPE ODOT HW 2.1	601 ROCK CHANNEL PROTECT W/FILTER TYPE B		
				LF	EACH	CY		
DP-4	CL	11+27.69	14+23.5(9TH)	100				
HW-1	CL	11+27.69			1			
RP-1	CL	11+21.69	11+27.69			0.66		
TOTALS CARRIED TO GENERAL SUMMARY				100	1	0.66		

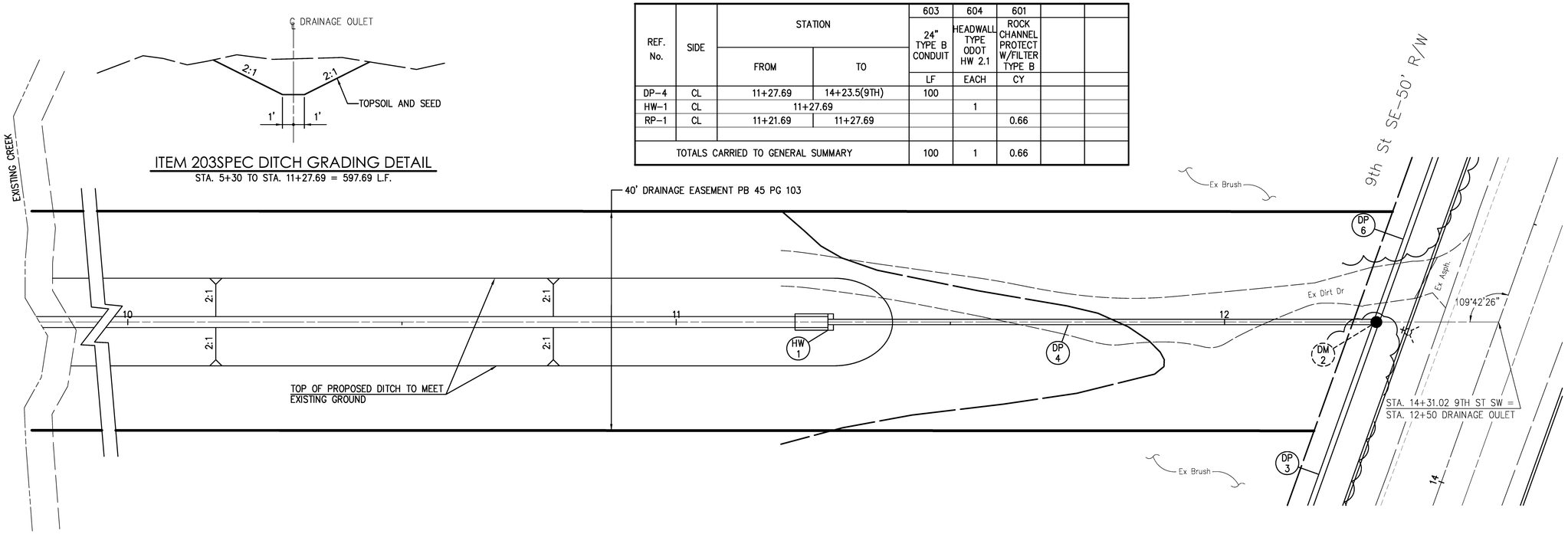

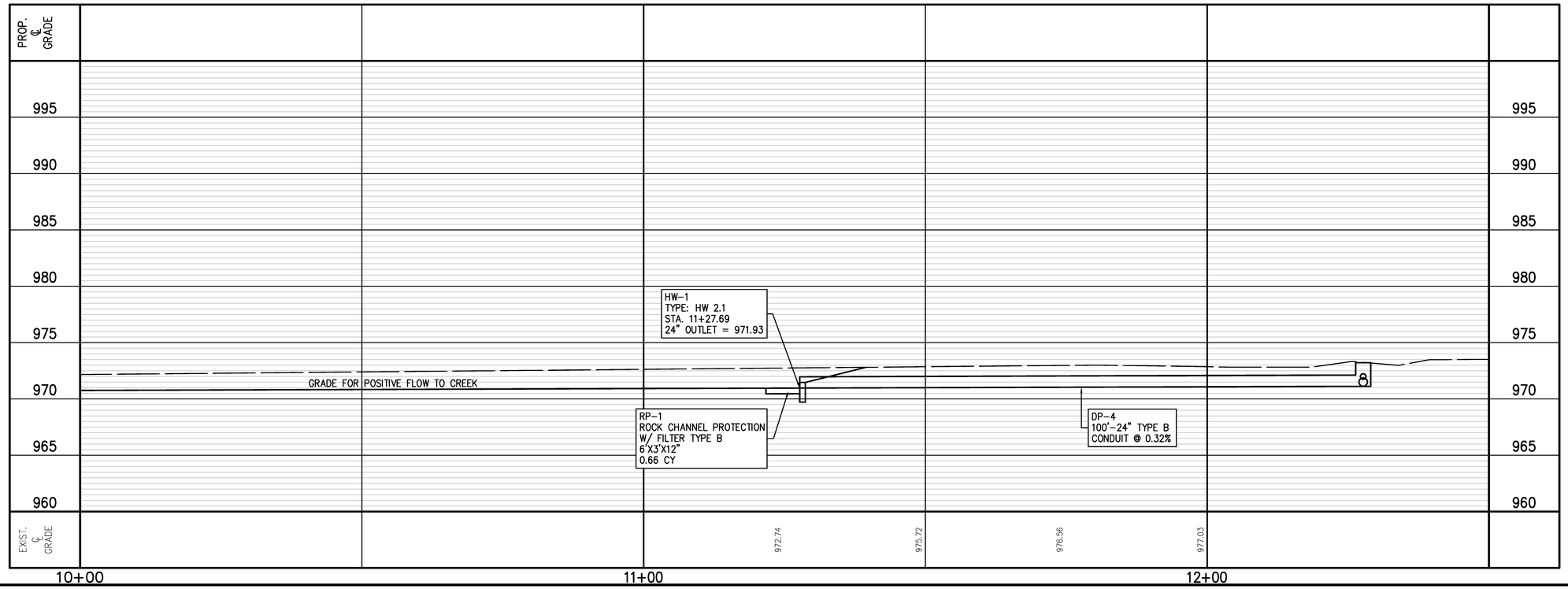

NW NE SW SE

VERTICAL IN FEET 10 5 0

0 5 10
HORIZONTAL SCALE IN FEET

CHECKED BY: KAD
DATE: Sept, 2012
DRAWN BY: FPW
DATE: Sept, 2012

REVISIONS:

DATE	DESCRIPTION

9th St. SW Improvement Project
Drainage Plan and Profile
City of Massillon
Stark County, Ohio

Kathy Catazaro-Perry, Mayor
Massillon City of Champions

DRAWING NAME: SHT37-drapp1.DWG
CITY NUMBER: 09st01

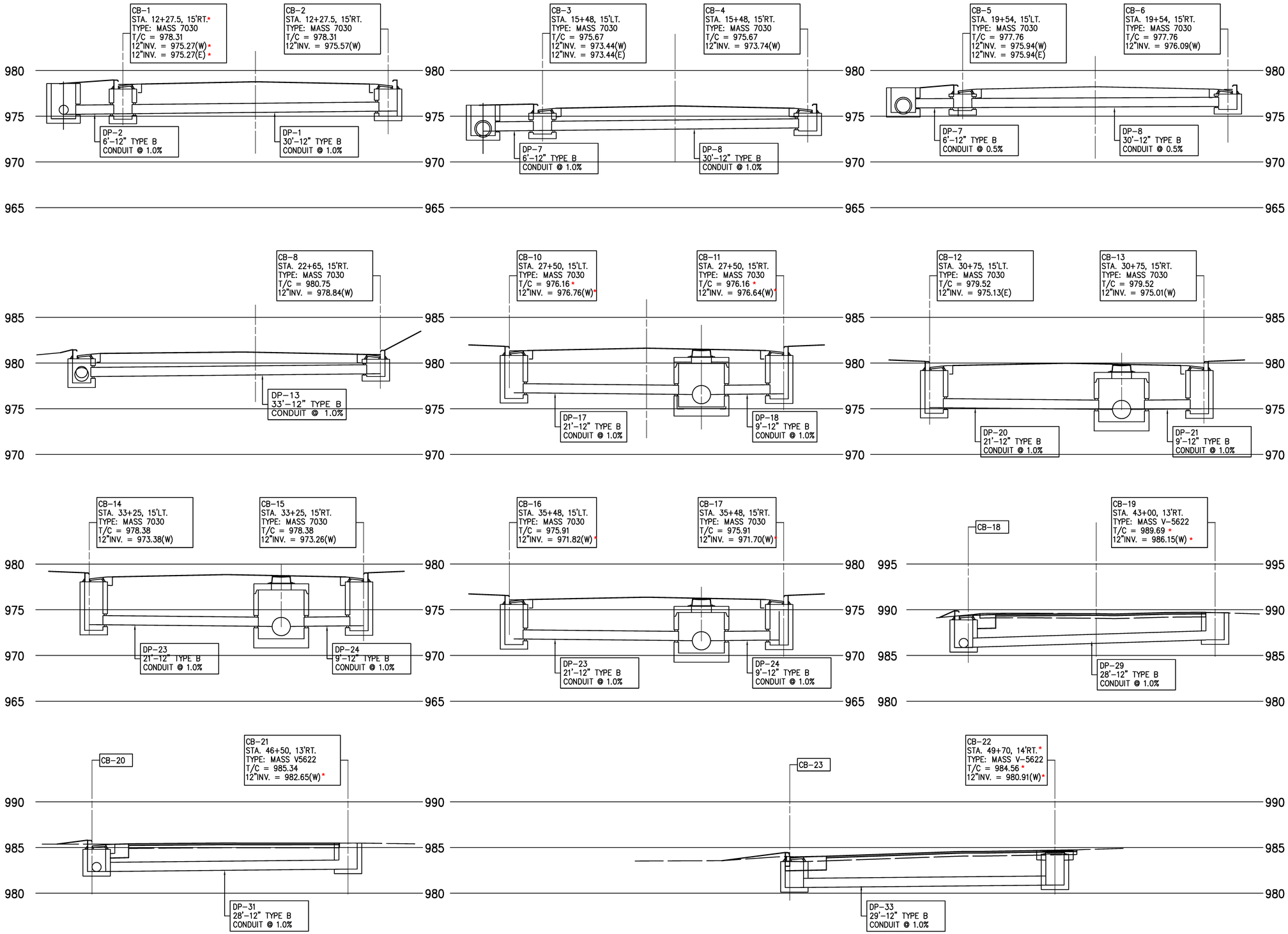

NW NE SW SE N

VERTICAL IN FEET 0 10 20

0 10 20
HORIZONTAL SCALE IN FEET

CHECKED BY: KAD
DATE: MAY, 2014
DRAWN BY: FPW
DATE: MAY, 2014

REVISIONS:

DATE	DESCRIPTION

9th St. SW Improvement Project
Drainage Profiles
City of Massillon
Stark County, Ohio

Kathy Catazaro-Perry, Mayor
Massillon City of Champions

DRAWING NAME: Sht39-Draprf.DWG
CITY NUMBER: 09st01

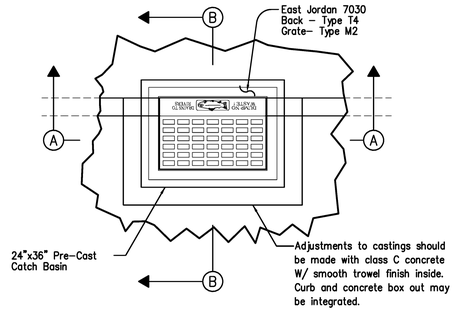

PLAN VIEW

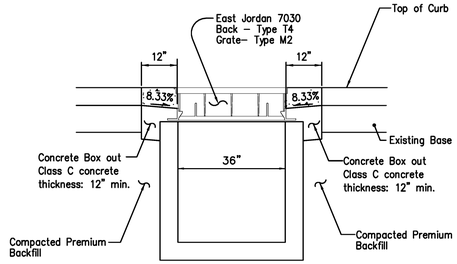

SECTION A–A

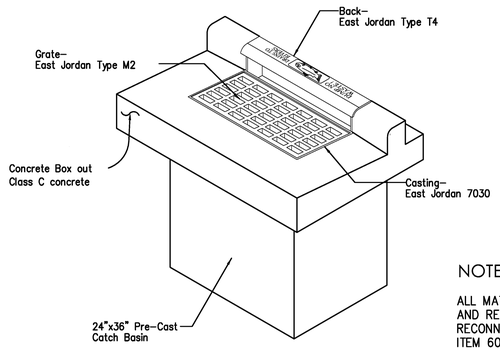

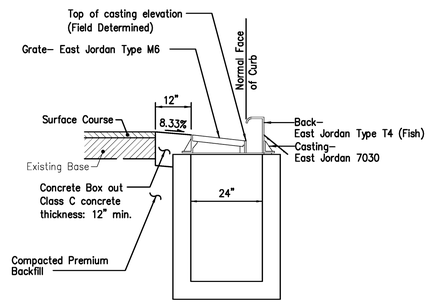

SECTION B–B

NOTE:

ALL MATERIALS, LABOR, AND REMOVAL TO PERFORM PROPER INSTALLATION AND REHABILITATION OF CATCH BASIN INCLUDING ALL CONDUIT AND RECONNECTIONS SHALL BE INCLUDED IN UNIT PRICE BID:
ITEM 604SPEC CATCH BASIN REHAB. TYPE A – EACH

ITEM 604 MASS7030

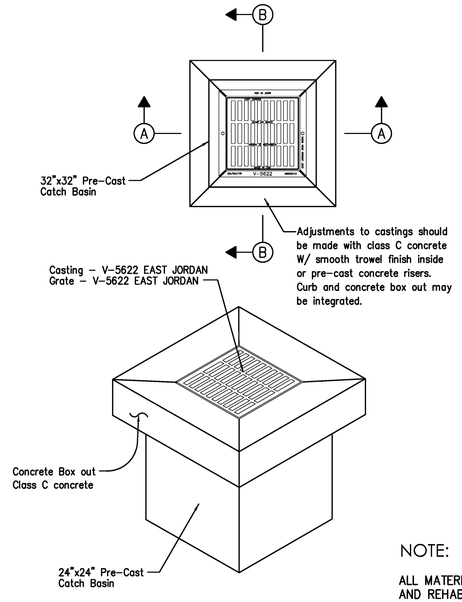

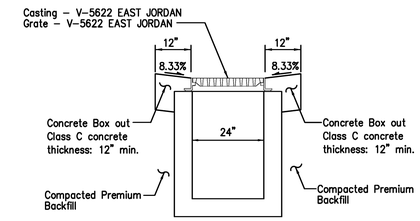

SECTION A–A

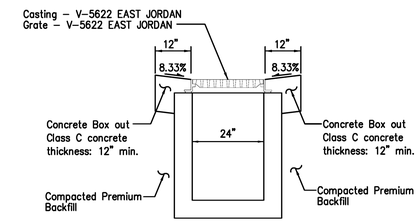

SECTION B–B

NOTE:

ALL MATERIALS, LABOR, AND REMOVAL TO PERFORM PROPER INSTALLATION AND REHABILITATION OF CATCH BASIN INCLUDING ALL CONDUIT AND RECONNECTIONS SHALL BE INCLUDED IN UNIT PRICE BID:
ITEM 604SPEC CATCH BASIN REHAB. TYPE B – EACH

ITEM 604 CATCH BASIN MASS V5622

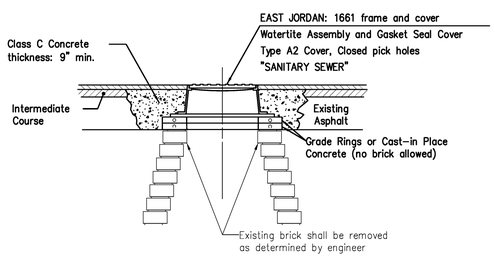

ITEM 604 SANITARY MANHOLE MASS1048-AGS-R

WORK SHALL INCLUDED ALL REMOVAL AND DISPOSAL OF EXISTING

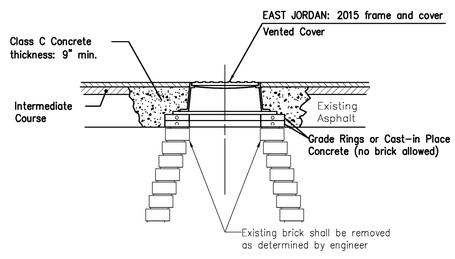

ITEM 604 DRAINAGE MANHOLE MASS1048-R

WORK SHALL INCLUDED ALL REMOVAL AND DISPOSAL OF EXISTING

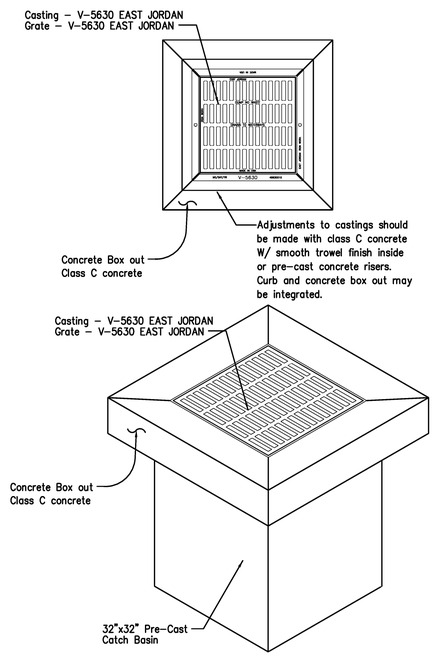

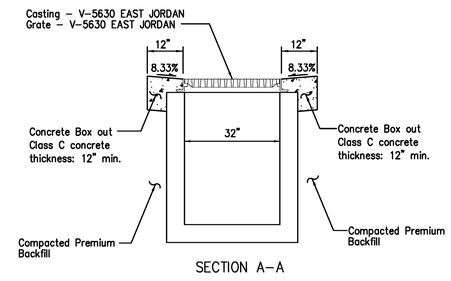

SECTION A–A

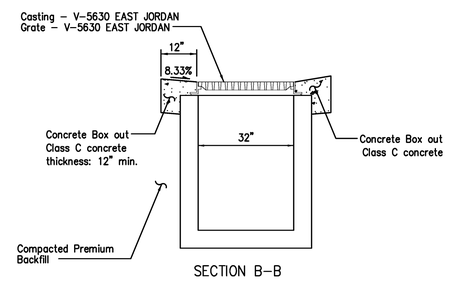

SECTION B–B

NOTE:

ALL MATERIALS, LABOR, AND REMOVAL TO PERFORM PROPER INSTALLATION AND REHABILITATION OF CATCH BASIN INCLUDING ALL CONDUIT AND RECONNECTIONS SHALL BE INCLUDED IN UNIT PRICE BID:
ITEM 604SPEC CATCH BASIN REHAB. TYPE B – EACH

ITEM 604 CATCH BASIN MASS V5630

NW NE SW SE

VERTICAL IN FEET 0 1 2

HORIZONTAL SCALE IN FEET 0 1 2

CHECKED BY: KAD

DATE: MAY, 2014

DRAWN BY: FPW

DATE: MAY, 2014

REVISIONS: DATE	DESCRIPTION

9th St. SW Improvement Project
Details
City of Massillon
Stark County, Ohio

Kathy Catazaro-Perry, Mayor
Massillon
City of Champions

DRAWING NAME: SHT37–mhdetl.DWG

CITY NUMBER: 09st01

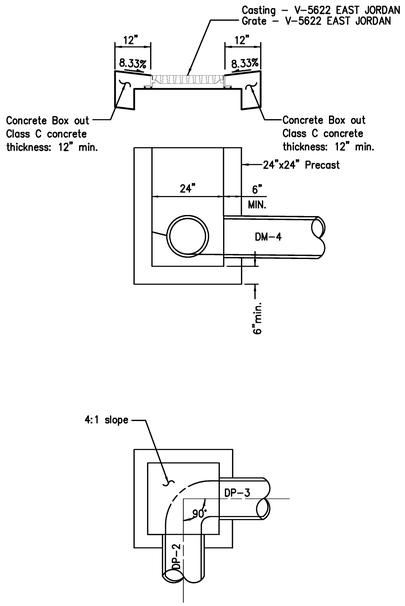

DM-1
CATCH BASIN MASS V5622

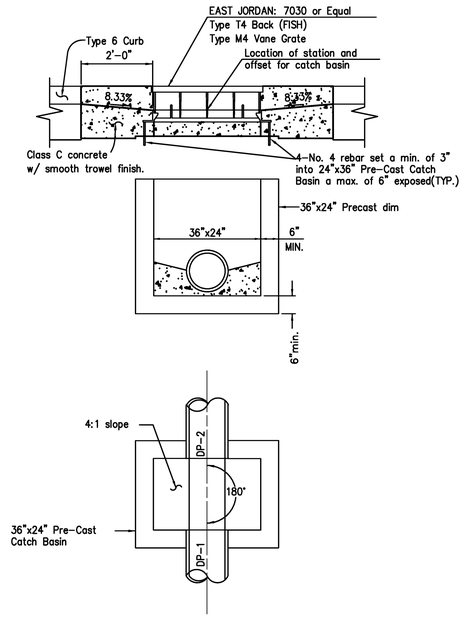

CB-1
CATCH BASIN MASS7030

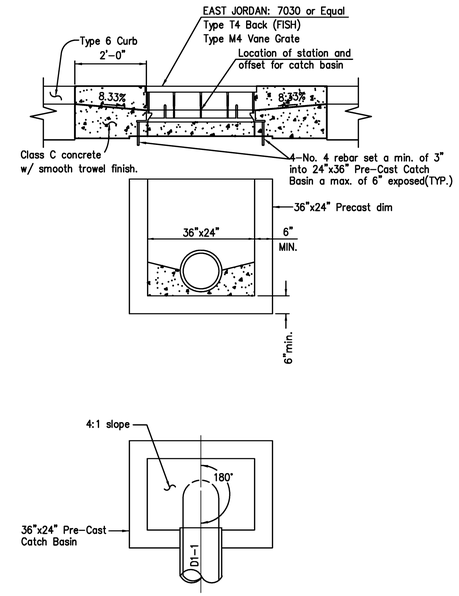

CB-2
CATCH BASIN MASS7030

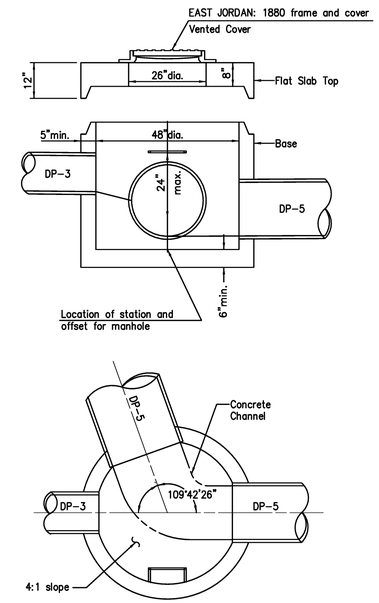

DM-2
DRAINAGE MANHOLE MASS1048

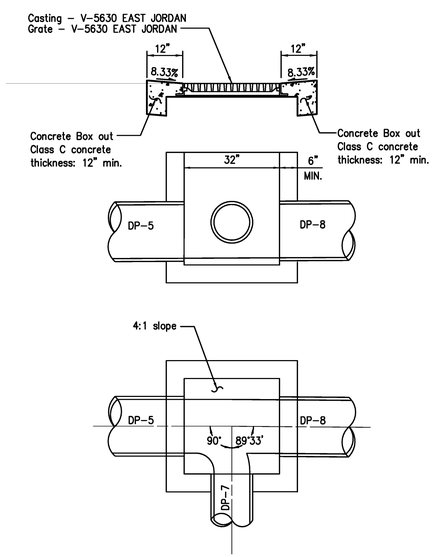

DM-3
CATCH BASIN MASS V5630

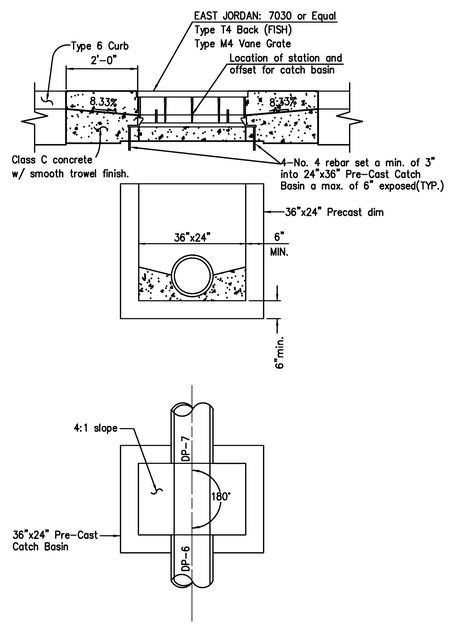

CB-3
CATCH BASIN MASS7030

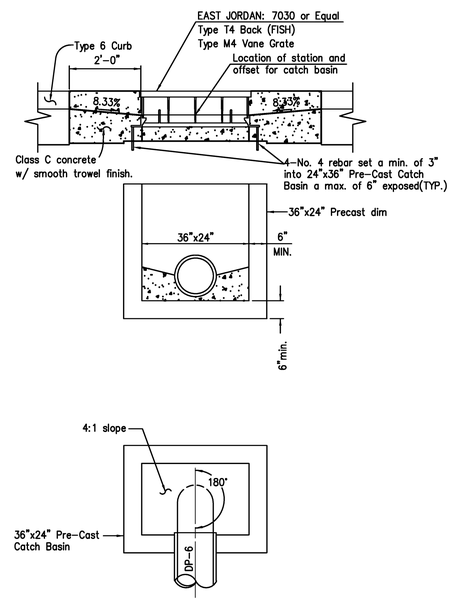

CB-4
CATCH BASIN MASS7030

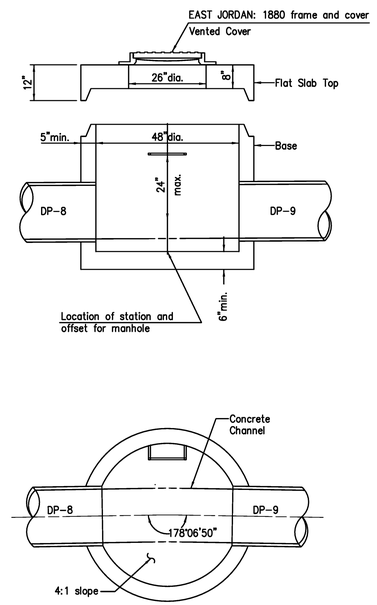

DM-4
DRAINAGE MANHOLE MASS1048

NW NE SW SE N

VERTICAL IN FEET 0 1 2

HORIZONTAL SCALE IN FEET 0 1 2

CHECKED BY: KAD
DATE: MAY, 2014
DRAWN BY: FPW
DATE: MAY, 2014

REVISIONS:

DATE	DESCRIPTION

9th St. SW Improvement Project
Drainage Details
City of Massillon
Stark County, Ohio

Kathy Catazaro-Perry, Mayor
Massillon City of Champions

DRAWING NAME: SHT40-Dradet1.DWG
CITY NUMBER: 09st01

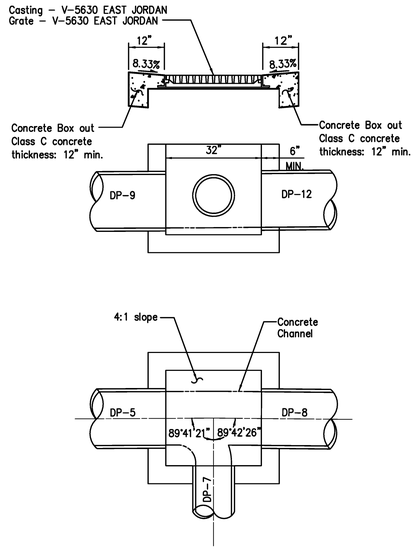

DM-5

CATCH BASIN MASS V5630

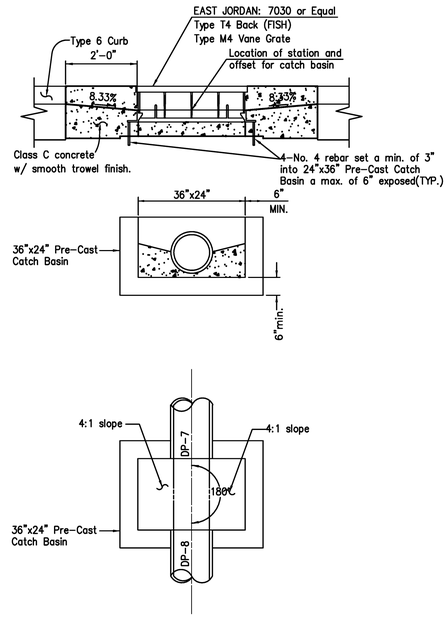

CB-5

CATCH BASIN MASS7030

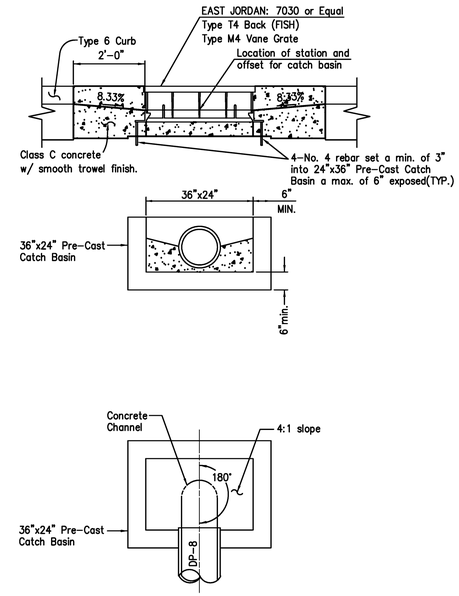

CB-6

CATCH BASIN MASS7030

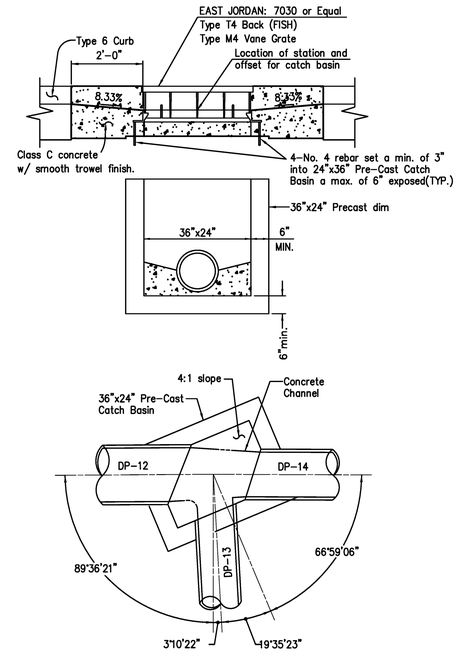

CB-7

CATCH BASIN MASS7030

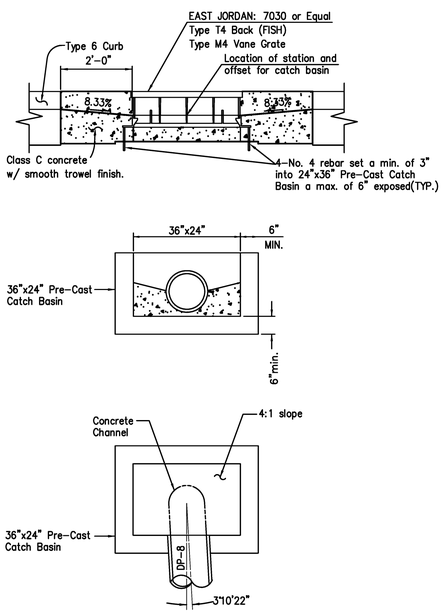

CB-8

CATCH BASIN MASS7030

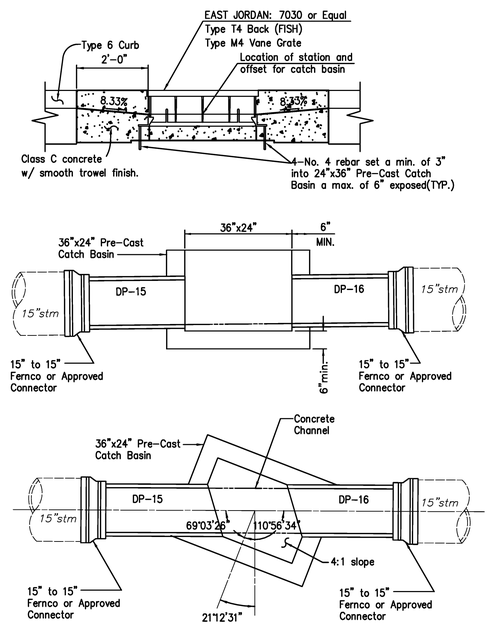

CB-9

CATCH BASIN MASS7030

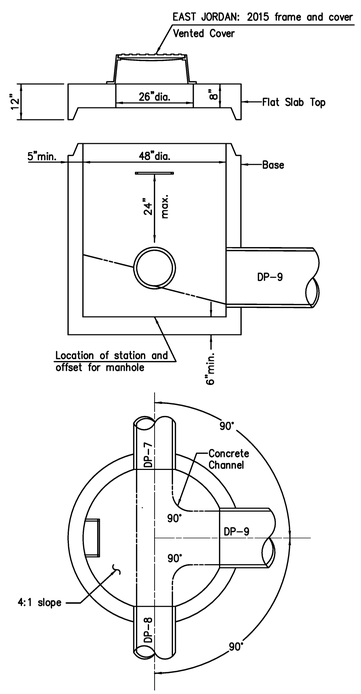

DM-6

DRTAINAGE MANHOLE MASS1048

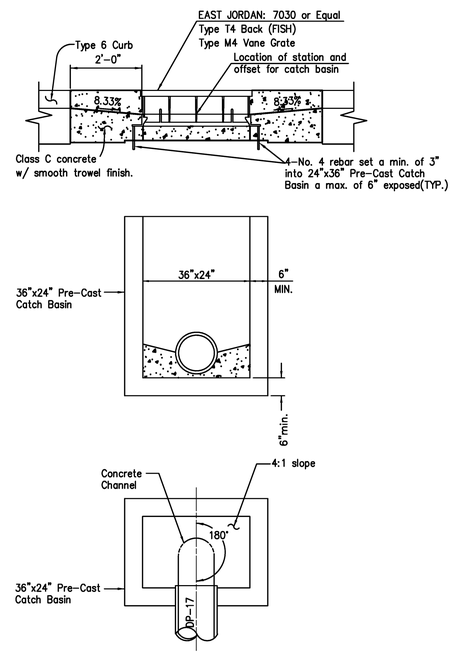

CB-10

CATCH BASIN MASS7030

NW NE SW SE N

VERTICAL IN FEET 0 1 2

0 1 2
HORIZONTAL
SCALE IN FEET

CHECKED BY: KAD
DATE: MAY, 2014
DRAWN BY: FPW
DATE: MAY, 2014

REVISIONS:

DATE	DESCRIPTION

9th St. SW Improvement Project
Drainage Details
City of Massillon
Stark County, Ohio

Kathy Catazaro-Perry, Mayor
Massillon City of Champions

DRAWING NAME: SHT41-Dradet2.DWG
CITY NUMBER: 09st01

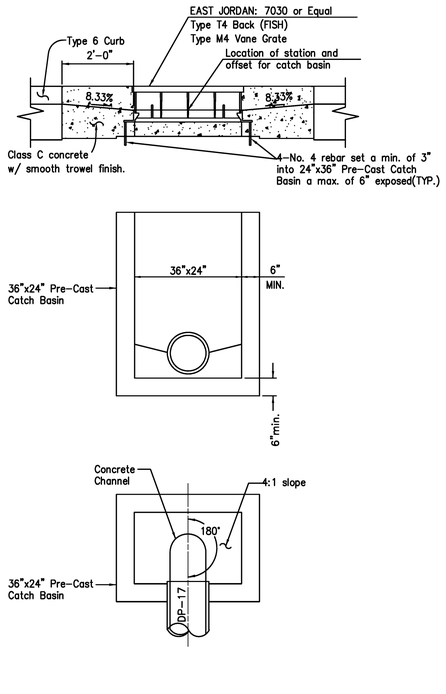

CB-11
CATCH BASIN MASS7030

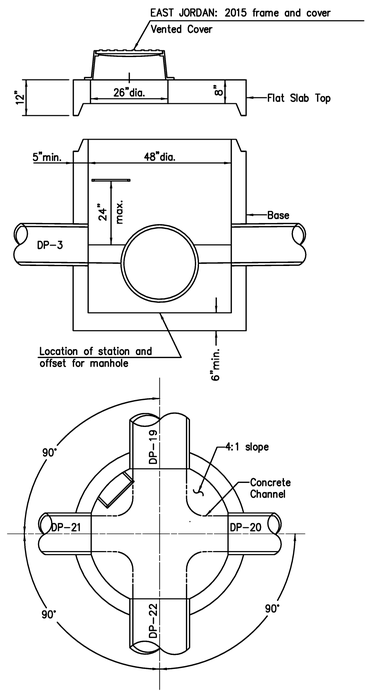

DM-7
DRAINAGE MANHOLE MASS1048

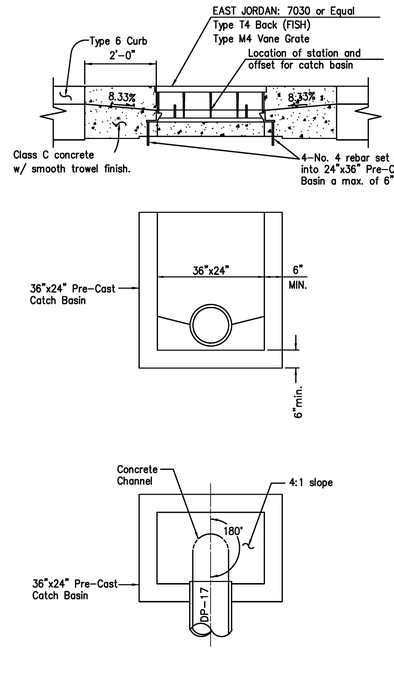

CB-13
CATCH BASIN MASS7030

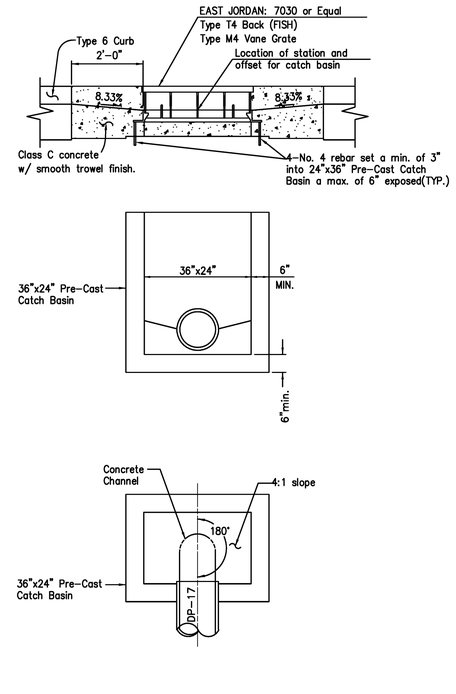

DM-9
CATCH BASIN MASS7030

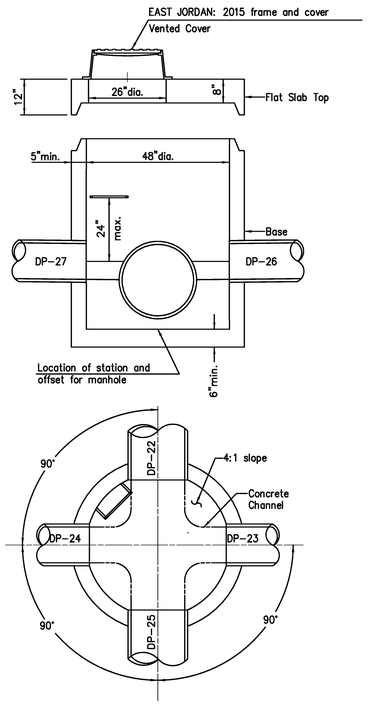

DM-8
DRAINAGE MANHOLE MASS1048

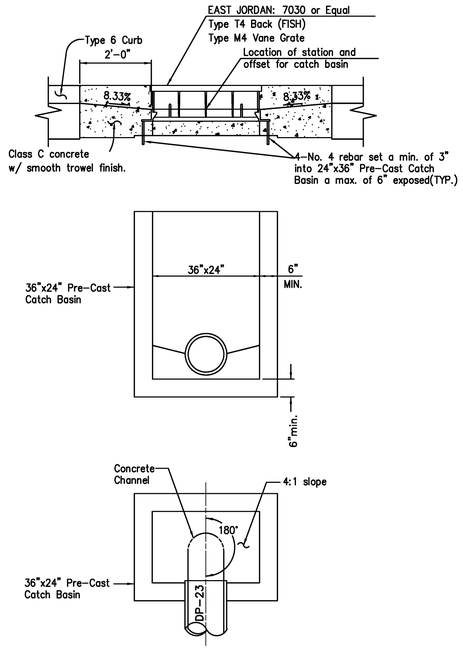

CB-14
CATCH BASIN MASS7030

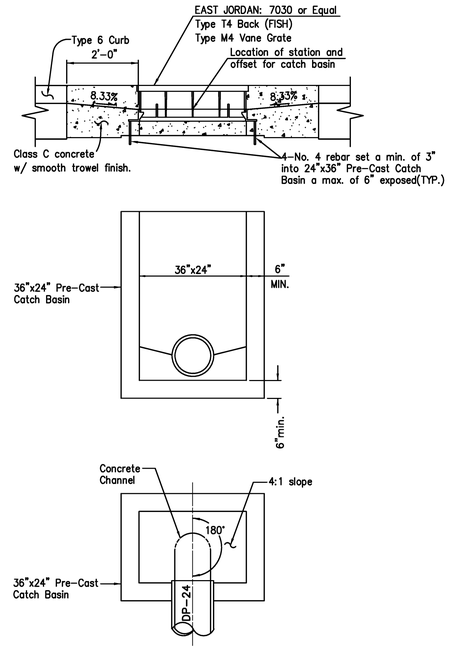

CB-15
CATCH BASIN MASS7030

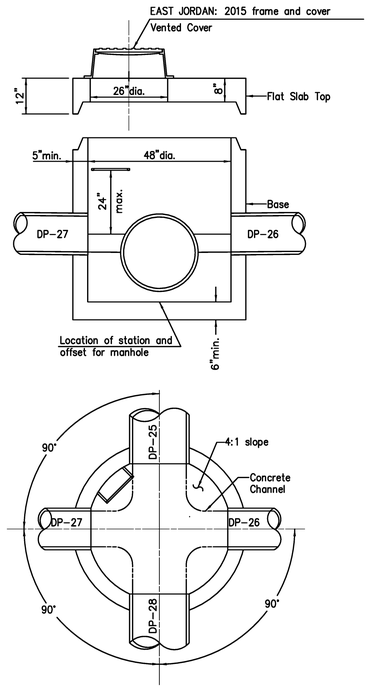

CB-16
DRAINAGE MANHOLE MASS1048

NW NE SW SE

VERTICAL IN FEET 20 10 0

0 10 20
HORIZONTAL SCALE IN FEET

CHECKED BY: KAD
DATE: MAY, 2014
DRAWN BY: FPW
DATE: MAY, 2014

REVISIONS:

DATE	DESCRIPTION

9th St. SW Improvement Project
Drainage Details
City of Massillon
Stark County, Ohio

Kathy Catazaro-Perry, Mayor
Massillon City of Champions

DRAWING NAME: SHT42-Dradet3.DWG
CITY NUMBER: 09st01

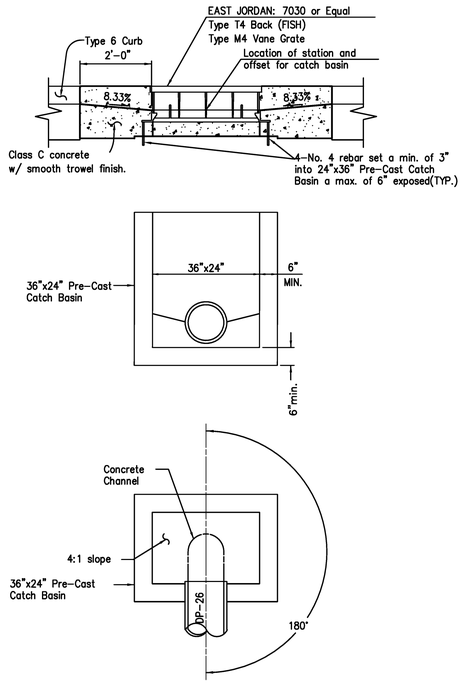

CB-16
CATCH BASIN MASS7030

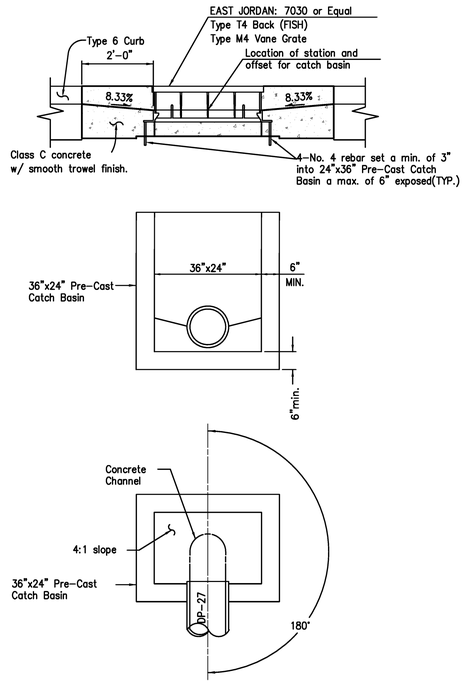

CB-17
CATCH BASIN MASS7030

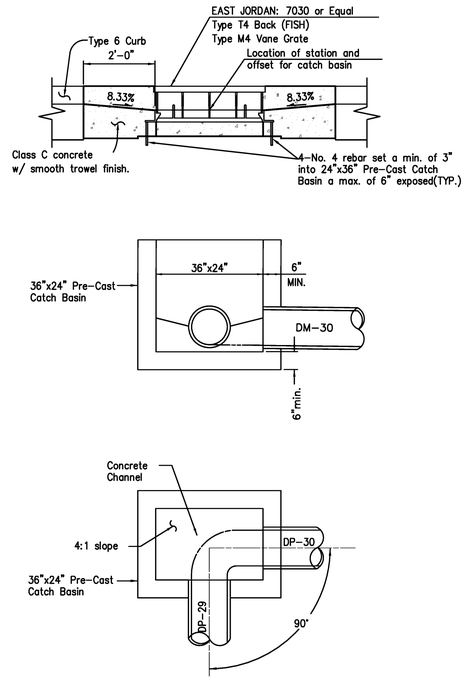

CB-18
CATCH BASIN MASS7030

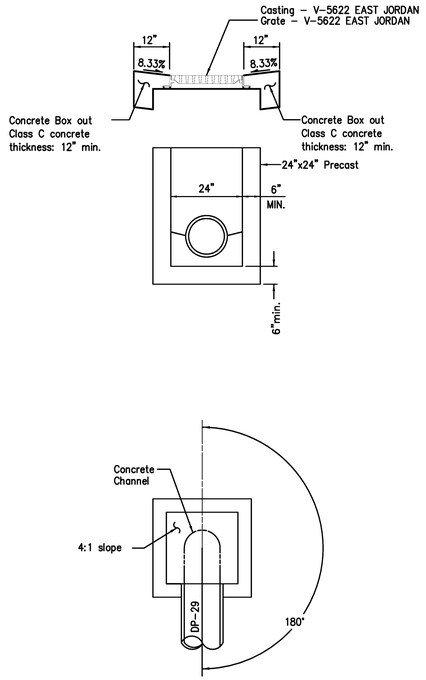

CB-19
CATCH BASIN MASS V5622

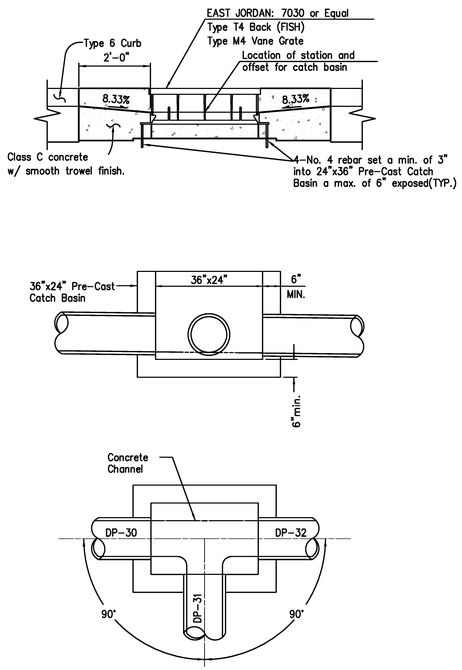

CB-20
CATCH BASIN MASS7030

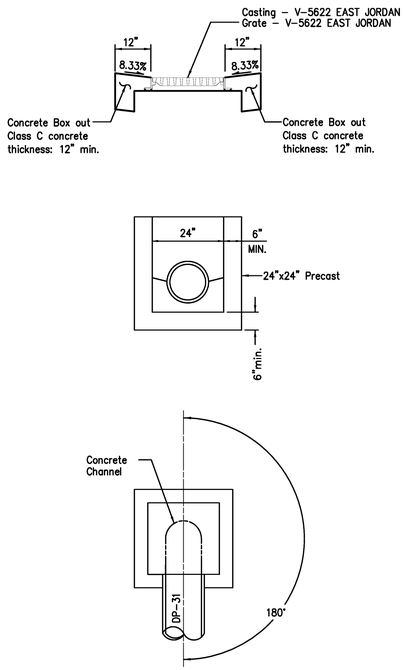

CB-21
CATCH BASIN MASS V5622

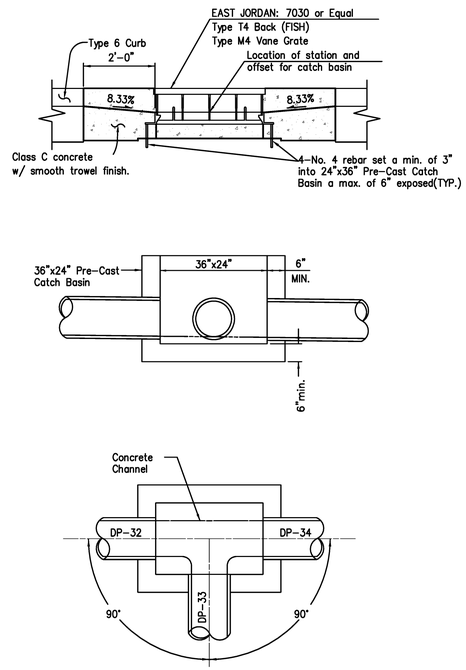

CB-23
CATCH BASIN MASS7030

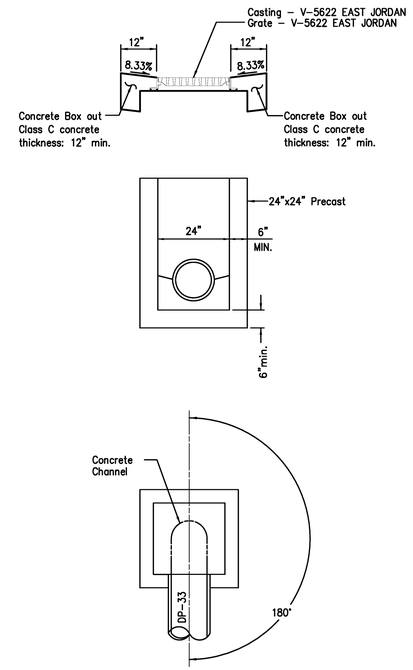

CB-22
CATCH BASIN MASS V5622

NW NE SW SE N

VERTICAL IN FEET 0 1 2

HORIZONTAL SCALE IN FEET 0 1 2

CHECKED BY: KAD
DATE: MAY, 2014
DRAWN BY: FPW
DATE: MAY, 2014

REVISIONS:

DATE	DESCRIPTION

9th St. SW Improvement Project
Drainage Details
City of Massillon
Stark County, Ohio

Kathy Catazaro-Perry, Mayor
Massillon City of Champions

DRAWING NAME: SHT43-Dradet4.DWG
CITY NUMBER: 09st01