CITY OF MASSILLON
CITY ENGINEER DEPARTMENT
STARK COUNTY, OHIO
1ST ST NE IMPROVEMENT PROJECT

PROJECT DESCRIPTION

MAIN PROJECT COMPONENTS CONSIST OF ITEMS SUCH AS PARTIAL AND FULL DEPTH PAVEMENT REPAIR; GRINDING OF EXISTING ASPHALT SURFACE; 2" 448 ASPHALT CONCRETE SURFACE COURSE; CURB RAMP INSTALLATION; CATCH BASIN REPLACEMENT; STORM SEWER PIPING REPLACEMENT; SANITARY SEWER PIPING REPLACEMENT; MANHOLES CASTING REPLACEMENT; PAVEMENT MARKINGS.

CONVENTIONAL SIGNS

RIGHT OF WAY	EXISTING:	PROPOSED:		
COUNTY LINE				
TOWNSHIP LINE				
CORPORATION LINE				
FENCE LINE	EXISTING:	PROPOSED:		
GUARDRAIL	EXISTING:	PROPOSED:		
MANHOLES	EXISTING:	PROPOSED:	REHABILITATED:	
CATCH BASINS	EXISTING:	PROPOSED:	REHABILITATED:	
SIGNS	1-POST:	2-POST:	3-POST:	STREET:
EXISTING POLES	POWER:	TELEPHONE	LIGHT	SPAN
PROPOSED POLES	POWER:	TELEPHONE	LIGHT	SPAN
EXIST. UTILITIES	VALVE:	HYDRANT:	METERS:	GUY:

PERMIT TO INSTALL

SANITARY SEWER PERMIT TO INSTALL (P.T.I.) HAS BEEN RECEIVED FROM THE OHIO ENVIROMENTAL PROTECTION AGENCY PROTECTION AGENCY THIS____________DAY OF,______________, 20___.

PTI No. ____

UNDERGROUND UTILITIES

TWO WORKING DAYS
BEFORE YOU DIG
CALL 1-800-362-2764 (TOLL FREE)
OHIO UTILITIES PROTECTION SERVICE
NON-MEMBERS
MUST BE CALLED DIRECTLY

TWO WORKING DAYS
BEFORE YOU DIG
1-800-925-0988 (TOLL FREE)
OIL @ GAS PRODUCERS UNDERGROUND
PROTECTION SERVICE

PLAN PREPARED BY:

CITY OF MASSILLON
Engineering Department

OWNER:

CITY OF MASSILLON
151 Lincoln Way East
Massillon, Ohio 44646

LOCATION MAP

PORTION TO BE IMPROVED
STREETS

Kathy Catazaro-Perry, Mayor
Massillon
City of Champions

INDEX OF SHEETS:

TITLE SHEET	1
TYPICAL SECTION AND DETAILS	2
GENERAL NOTES	3–5
GENERAL SUMMARY	6
PLAN AND PROFILE	7–16
MISCELLANEOUS DETAILS	17
DRAINAGE DETAILS	18–21
SANITARY DETAILS	22
TRAFFIC CONTROL	23

STATE OF OHIO KEITH A. DYLEWSKI E-70907 REGISTERED PROFESSIONAL ENGINEER

CITY ENGINEER — KEITH A. DYLEWSKI, P.E., P.S. — 7/23/12 DATE

CITY OF MASSILLON ELECTED OFFICIALS

KATHY CATAZARO-PERRY	MAYOR
PERICLES G. STERGIOS	LAW DIRECTOR/PROSECUTOR
JAYNE FERRERO	AUDITOR
PAUL LAMBERT	TREASURER
COUNCIL	
GLEN E. GAMBER	PRESIDENT
SARITA CUNNINGHAM-HEDDERLY	1st WARD
NANCY HALTER	2nd WARD
ANDREA SCASSA	3rd WARD
TONY M. TOWNSEND	4th WARD
DONNIE PETERS JR.	5th WARD
ED LEWIS	6th WARD
PAUL MANSON	AT LARGE
LARRY SLAGLE	AT LARGE
MILAN CHOVAN	AT LARGE

NW NE SW SE N

VERTICAL IN FEET 200 100 0

200 100 0 HORIZONTAL SCALE IN FEET

CHECKED BY: KAD
DATE: MAY, 2012
DRAWN BY: FPW
DATE: MAY, 2012

REVISIONS: DATE DESCRIPTION

1st St NE Improvement Project
Title Sheet
City of Massillon
Stark County, Ohio

Kathy Catazaro-Perry, Mayor
Massillon City of Champions

DRAWING NAME: bitofedenTitle.DWG
CITY NUMBER: 10ss03

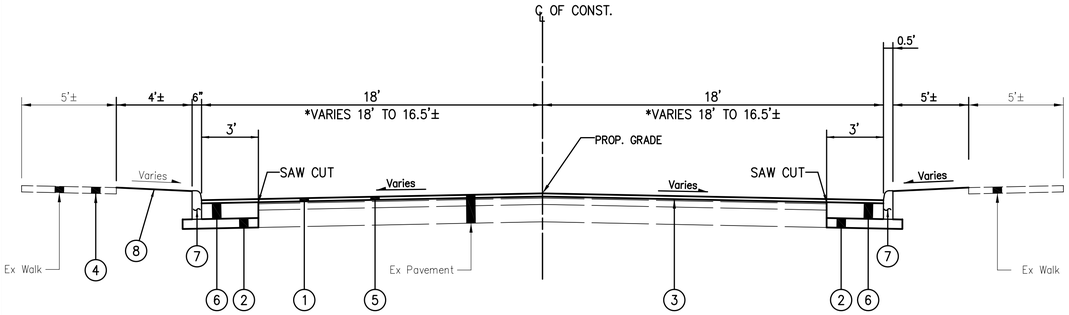

1st ST. NE WIDENING TYPICAL SECTION

STA. 10+15.60 TO STA. 11+25.00
*STA. 11+25.00 TO STA. 12+00

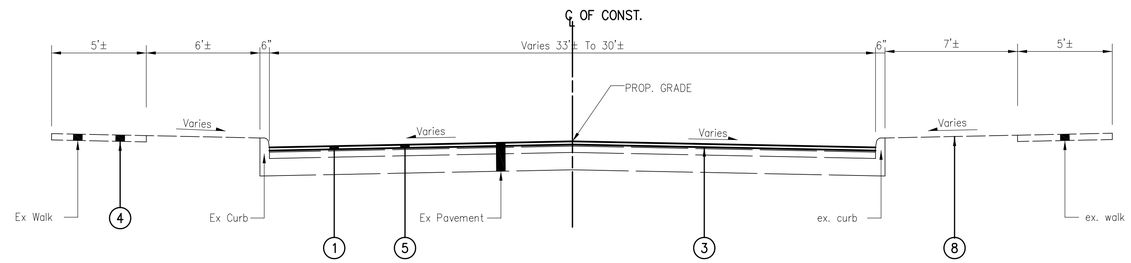

1st ST. NE RESURFACING TYPICAL SECTION

STA. 10+00.00 TO STA. 49+64.00

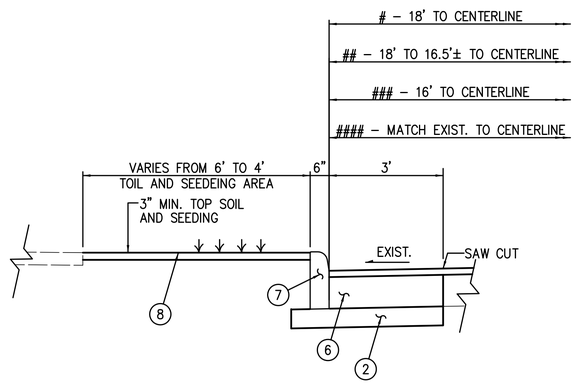

WIDENING AND CURB REPLACEMENT DETAIL

PROPOSED LEGEND

1. – ITEM 448–2" ASPHALT CONCRETE SURFACE, TYPE 1, PG64–22
2. – ITEM 304–6" AGGREGATE BASE
3. – ITEM 407–TACK COAT
4. – ITEM 608–CONCRETE WALK
5. – ITEM 254–2" PAVEMENT PLANNING
6. – ITEM 301–10" ASPHALT CONCRETE BASE
7. – ITEM 609–CURB, TYPE 6
8. – ITEM 659–SEEDING AND MULCHING

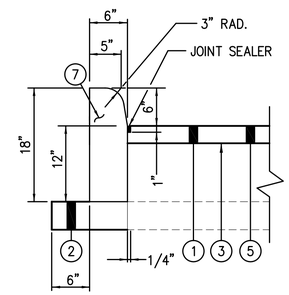

ITEM 609 - CURB, TYPE 6

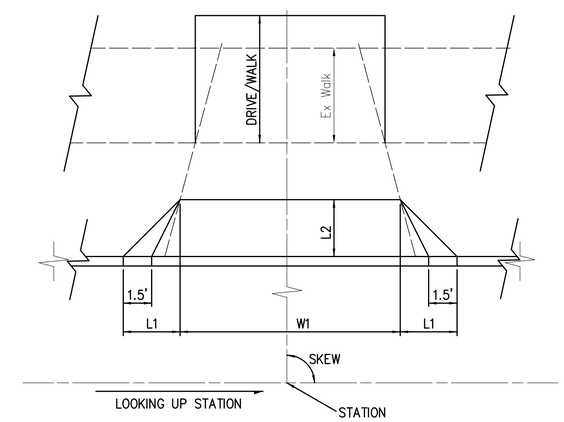

PLAN

REF. No.	SIDE	STATION FROM	STATION TO	304 6" AGGREGATE BASE CY	301 10" ASPHALT CONCRETE BASE CY	609 TYPE 6 CURB LF
#	LT	10+03.15	11+25.00	8.5	12	111
#	RT	10+37.27	11+25.00	8.5	12	70
##	RT	11+25.00	12+00.00	4.9	7	75
##	LT	11+25.00	12+00.00	4.9	7	75
####	LT	18+35	18+55	1.3	2	0
####	LT	18+35	18+55	1.3	2	0
####	LT	18+85.62	19+05	1.3	2	0
####	RT	18+95	19+15	1.3	2	0
###	LT	19+05	20+90	12	17	165
####	RT	20+90	21+28.52	3.2	5	29
####	LT	20+90	21+10	1.3	2	0
####	LT	21+57.99	21+85	1.9	3	10
####	RT	21+59.63	21+85	2.2	4	14
####	LT	30+10.41	30+30.41	1.3	2	0
####	RT	30+15.35	30+34.95	1.3	2	0
####	RT	31+23.75	31+47.88	2.7	5	7
###	LT	31+60.50	35+20.00	20	33	297
####	RT	31+73.98	31+80.86	1.3	2	7
####	RT	33+50	33+70	1.3	2	0
####	RT	35+00	35+20	1.3	2	0
####	RT	42+39.76	42+41	1	0	14
####	RT	42+84	43+04	1.3	2	0
####	LT	42+89	43+15	1.7	3	6
####	LT	44+51.50	44+74.50	1.3	3	0
####	RT	44+46.50	44+59.50	1.3	3	0
TOTALS CARRIED TO GENERAL SUMMARY				88.4	136	880

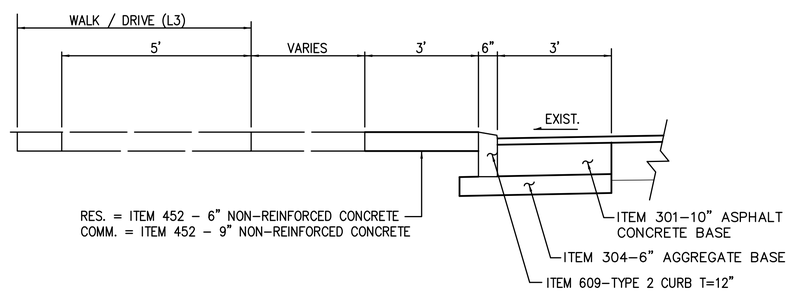

DRIVEWAY GUTTER DETAIL

SHEET No.	REF. No.	STATION	SIDE	L–1	L–2	L–2	W–1	304 6" AGGREGATE BASE CY	452 NON–REINFORCED CONCRETE PAVEMENT SY	452 NON–REINFORCED CONCRETE PAVEMENT WALK/DRIVE SY
	DR–1	10+64	LT	4.5	4.5		9	2	7	
	DR–2	11+07	LT	4.5	4		10	2	7	
	DR–3	11+70.5	LT	4.5	4.5		10.5	2	8	
	DR–4	19+33.5	LT	4.5	5.5		11	2	10	
	DR–5	19+77	LT	4.5	6		9	2	9	
	DR–6	20+21	LT	4.5	5.5	6	11	2	10	9
	DR–7	30+15	LT	3	3		9	1	4	
	DR–8	30+96	LT	3	3		10.5	1	5	
	DR–9	33+43.5	LT	3	3		12.5	1	6	
	DR–10	34+01.5	LT	3	3		13	1	6	
	DR–11	34+84	LT	3	3		72.5	5	25	
	DR–12	42+96	LT	3	3		10.5	2	5	
	DR–13	44+58	RT	0	3		20	2	7	
TOTALS CARRIED TO GENERAL SUMMARY								25	109	9

NW NE SW SE

VERTICAL IN FEET 0 1 2

HORIZONTAL SCALE IN FEET 0 1 2

CHECKED BY: KAD
DATE: MAY, 2012
DRAWN BY: FPW
DATE: MAY, 2012

REVISIONS:

DATE	DESCRIPTION

1st St NE Improvement Project
Typical Section and Details
City of Massillon
Stark County, Ohio

Kathy Catazaro-Perry, Mayor
Massillon
City of Champions

DRAWING NAME: 1StNEDetail1.DWG
CITY NUMBER: 10ST03

* THE FOLLOWING NOTES ARE CITY OF MASSILLON STANDARD NOTES AND MAY NOT BE APPLICABLE TO ALL PROJECTS.

UTILITIES

LISTED BELOW ARE ALL KNOWN UTILITIES LOCATED WITHIN THE PROJECT CONSTRUCTION LIMITS TOGETHER WITH THEIR RESPECTIVE OWNERS:

AT&T
50 W.BOWERY, 6TH FLOOR
AKRON, OH 44308
800-384-8057

AQUA WATER
P.O. BOX 584
MASSILLON, OH 44648
(330) 833-4156

OHIO EDISON
STARK DIVISION
2600 S. ERIE ST.
MASSILLON, OH 44545
(330) 830-7085

MASSILLON CABLE TV
P.O. BOX 814
MASSILLON, OH 44648
(330) 833-4134

GREAT LAKES
104 6TH ST. S.W.
CANTON, OH 44702
(330) 456-2454

CITY OF MASSILLON
SANITARY SEWER
151 LINCOLN WAY EAST
MASSILLON, OH 44646
(330) 830-1722

AT&T COMMUNICATIONS
2535 E. 40TH AVE.
DENVER, CO 80205-3601
(800) 852-3786

DOMINION EAST OHIO GAS COMPANY
4725 SOUTHWAY ST. S.W.
CANTON, OH 44706
(330) 478-3142

NORTHEAST OHIO NATURAL
GAS CORP.
9081 S.R. 250
STRASBURG, OH 44680-9766
(330) 878-5589

THE CONTRACTOR SHALL NOTIFY ALL UTILITIES 48 HOURS PRIOR TO WORK.

THE LOCATION OF THE UNDERGROUND UTILITIES SHOWN ON THE PLANS ARE SHOWN AT APPROXIMATE LOCATIONS AND WHERE OBTAINED AS REQUIRED FROM THE OWNERS AS REQUIRED BY SECTION 153.64 OF THE OHIO REVISED CODE

OUPS – 1-800-362-2764
OGUPUPS – 1-800-925-0988

DATUM ELEVATION

ALL BENCHMARKS ARE BASED ON REFERENCE BENCHMARKS PROVIDED BY THE CITY OF MASSILLON

STATIONING

ALL STATIONING SHOWN IS REFERENCED TO THE BASELINE AS SHOWN.

NOTIFICATION OF SAFETY FORCES AND BUS GARAGES

THE CONTRACTOR SHALL NOTIFY ALL AGENCY LISTED BELOW AT LEAST 48 HOURS IN ADVANCE OF ANY STREET CLOSING OR TRAFFIC CHANGE.

MASSILLON SAFETY SERVICE
330-830-1702

MASSILLON FIRE DEPARTMENT
330-833-1053

PERRY TOWNSHIP HALL
330-833-2141

NORTH LAWRANCE FIRE DEPT.
330-832-6347

TUSCARAWAS TOWNSHIP HALL
330-832-4337

JACKSON FIRE DEPARTMENT
330-832-1553

MASSILLON POLICE DEPARTMENT
330-830-1735

MASSILLON SCHOOL BUS GARAGE
330-830-1849

JACKSON TOWNSHIP HALL
330-832-7416

PERRY FIRE DEPARTMENT
330-478-5121

JACKSON POLICE DEPARTMENT
330-497-7440

JACKSON SCHOOL BUS GARAGE
330-830-8042

PERRY POLICE DEPARTMENT
330-833-3865

PERRY SCHOOL BUS GARAGE
330-477-1300

STARK COUNTY SHERIFF
330-430-3887

TUSCARAWAS SCHOOL BUS GARAGE
330-837-7805

SARTA
330-454-5333

SUBSURFACE CONDITIONS

IT IS THE OBLIGATION AND RESPONSIBILITY OF THE CONTRACTOR TO MAKE HIS OWN INVESTIGATION OF SUBSURFACE CONDITIONS PRIOR TO SUBMITTING THEIR BID. PROSPECTIVE BIDDERS ARE TO COORDINATE WITH THE OWNER FOR ACCESS TO THE SITE FOR INSPECTIONS AND EXPLORATORY EXCAVATION. THE BIDDER SHALL CONTACT THE OWNER AT LEAST 72 HOURS IN ADVANCE OF THE DESIRED INSPECTION OR EXCAVATION. THE BIDDER SHALL CONTACT O.U.P.S. AND OBTAIN LOCATIONS OF OTHER UTILITIES.

QUANTITIES

QUANTITIES ARE INDICATED FOR COMPARISON OF BIDS ONLY. IT SHALL BE THE RESPONSIBILITY OF THE CONTRACTOR TO VERIFY QUANTITIES BEFORE ORDERING MATERIALS. VARIATIONS FROM THE PLAN QUANTITIES SHALL BE APPROVED BY THE CITY OF MASSILLON ENGINEER BEFORE MATERIAL ORDERS ARE PLACED. MATERIALS REJECTED DUE TO INCOMPATIBILITY BETWEEN ORDERED QUANTITIES AND FIELD CONDITIONS SHALL BE REPLACED AT THE CONTRACTOR'S EXPENSE.

CONSTRUCTION SPECIFICATIONS & STANDARDS

ALL CONSTRUCTION IS TO BE COMPLETED ACCORDING TO THE CURRENT CITY OF MASSILLON SPECIFICATIONS AND STANDARDS, AND THE LATEST EDITION OF THE STATE OF OHIO DEPARTMENT OF TRANSPORTATION CONSTRUCTION AND MATERIAL SPECIFICATIONS. WHEN A CONFLICT ARISES BETWEEN THE CITY OF MASSILLON AND ODOT'S STANDARDS, THE MORE STRINGENT STANDARD WILL BE USED AT THE DISCRETION OF THE CITY OF MASSILLON ENGINEER. THE CONTRACTOR SHALL FOLLOW ALL OSHA AND ADA REGULATIONS AND REQUIREMENTS.

PRESERVATION OF EXISTING UTILITY SERVICES

ANY EXISTING WATER LINE, SANITARY SEWER, STORM SEWER, GAS LINE OR OTHE UTILITY IN OR OUTSIDE OF THE CONSTRUCTION LIMITS, DAMAGED DURING CONSTRUCTION OF THE PROPOSED PROJECT SHALL BE REPLACED AT THE CONTRACTORS EXPENSE.

CONTRACTOR AVAILABILITY

THE CONTRACTOR SHALL SUPPLY THE ENGINEER WITH A 24 HOUR PHONE NUMBER WHERE THE CONTRACTOR SHALL BE AVAILABLE FOR EMERGENCIES.

PRESERVATION OF PRIVATE PROPERTY

THE CONTRACTOR SHALL PERFORM WORK AS TO NOT DISTURB, DAMAGE OR DESTROY ANY TELEPHONE OR POWER POLES, SIGNS, LANDSCAPING ITEMS, ETC.. ANY ITEM DAMAGED OR DESTROYED SHALL BE REPLACED AT THE CONTRACTOR'S EXPENSE AND ANY ITEM DISTURBED OR IN CONFLICT WITH THE WORK TO BE PERFORMED SHALL BE REMOVED AND RESET AT THE CONTRACTOR'S EXPENSE. PRIOR ENGINEER APPROVAL IS REQUIRED BEFORE ANY OF THE ABOVE ITEMS ARE PERFORMED.

ACCESSIBILITY TO PRIVATE PROPERTY

ACCESS TO ALL DRIVEWAYS AND PARKING AREAS WITHIN THE PROJECT LIMITS SHALL BE MAINTAINED AT ALL TIMES. THE TRENCH SHALL BE BACKFILLED AT THE END OF EACH WORK DAY TO PROVIDE ACCESS. THE CONTRACTOR MUST NOTIFY EACH PROPERTY OWNER AT LEAST 24 HOURS IN ADVANCE OF CUTTING THEIR DRIVEWAY.

WORK LIMITS

THE WORK LIMITS SHOWN ON THESE PLANS ARE FOR PHYSICAL CONSTRUCTION ONLY. THE CONTRACTOR SHALL PROVIDE FOR THE INSTALLATION AND OPERATION OF ALL WORK ZONE TRAFFIC CONTROL AND WORK ZONE TRAFFIC CONTROL DEVICES REQUIRED BY THESE PLANS WHETHER INSIDE OR OUTSIDE THESE WORK LIMITS.

PROFILE AND ALIGNMENT

THE PROPSED PAVEMENT RESURFACING SHALL FOLLOW THE ALIGNMENT AND PROFILE OF THE EXISTING PAVEMENT. THE PROPOSED ASPHALT CONCRETE OVERLAY SHALL BE AS SHOWN ON THE TYPICAL SECTIONS.

GRADING AND FILLING OPERATIONS

THE PLACEMENT OF COMPACTED AGGREGATE SHALL NOT EXTEND PAST THE EXISTING GRADED SHOULDERS. NO EXCAVATION, GRADING, OR FILLING OPERATIONS SHALL BE PERFORMED IN ANY WETLANDS OR STREAMS, UNLESS THE REQUIRED STATE AND/OR FEDERAL PERMITS HAVE BEEN OBTAINED IN ACCORDANCE WITH ALL APPLICABLE STATE AND/OR FEDERAL LAWS AND REGULATIONS. UNDER NO CIRCUMSTANCES SHALL THE CONTRACTOR STORE EQUIPMENT AND/OR MATERIALS IN ANY WETLANDS OR STREAMS.

CLEARING AND GRUBBING

ALTHOUGH THERE ARE NO TREES OR STUMPS SPECIFICALLY MARKED FOR REMOVAL WITHIN THE LIMITS OF THE PROJECT. A LUMP SUM QUANTITY HAS BEEN INCLUDED IN THE BID FORM FOR ITEM201SPEC, CLEARING AND GRUBBING. THIS ITEM SHALL INCLUDE ALL PROVISIONS AS SET FORTH IN THE 2008 ODOT SPECIFICATIONS. REMOVAL ITEMS MAY INCLUDE TREES, STUMPS, AND BRUSH AS DETERMINED BY THE CITY ENGINEER.

ALL PROVISIONS AS SET FORTH IN THE SPECIFICATIONS UNDER THIS ITEM SHALL BE INCLUDED IN THE LUMP SUM PRICE BID FOR ITEM 201SPEC, CLEARING AND GRUBBING.

PRESERVATION OF PROPERTY CORNERS AND SURVEY MARKERS

THE CONTRACTOR SHALL PRESERVE ALL CORNERSTONES, IRON PINS, CONCRETE MONUMENTS AND ANY TYPE OF LAND MONUMENT. HE SHALL HAVE ALL LAND MONUMENTS IN THE PROXIMITY OF THE WORK REFERENCED. HE SHALL REPLACE DESTROYED OR DAMAGED MONUMENTS AND SHAL FURNISH A CERTIFICATION BY AN OHIO REGISTERED SURVEYOR THAT THE MONUMENTS HAVE BEEN RESTORED.

REMOVAL AND RELOCATION OF EXISTING UTILITIES

THE CONTRACTOR IS REQUIRED TO COOPERATE WITH EACH RESPECTIVE UTILITY OWNER FOR THE REMOVAL AND RELOCATION OF ANY AND ALL UTILITIES THAT CREATE A CONFLICT WITH CONSTRUCTION OF THE PROJECT.

CROSSING OR CONNECTING TO EXISTING PIPES AND UTILITIES

WHERE THE PLANS PROVIDE FOR A PROPOSED CONDUIT TO BE CONNECTED TO, OR CROSS OVER OR UNDER AN EXISTING SEWER OR UNDERGROUND UTILITY, THE CONTRACTOR SHALL LOCATE THE EXISTING PIPES OR UTILITIES BOTH AS TO LINE AND GRADE BEFORE STARTING TO LAY THE PROPOSED CONDUIT.

IF IT IS DETERMINED THAT THE ELEVATION OF THE EXISTING CONDUIT, OR EXISTING APPURTENANCE TO BE CONNECTED, DIFFERS FROM THE PLAN ELEVATION OR RESULTS IN A CHANGE IN THE PLAN CONDUIT SLOPE, THE CITY OF MASSILLON ENGINEER SHALL BE NOTIFIED BEFORE STARTING CONSTRUCTION OF ANY PORTION OF THE PROPOSED CONDUIT WHICH WILL BE AFFECTED BY THE VARIANCE IN THE EXISTING ELEVATIONS.

PAYMENT FOR THE OPERATIONS DESCRIBED ABOVE SHALL BE INCLUDED IN THE CONTRACT PRICE FOR THE PERTINENT 603 CONDUIT ITEM.

REVIEW OF SANITARY AND DRAINAGE FACILITIES

AN INSPECTION OF ALL EXISTING SEWERS WHICH ARE TO REMAIN IN SERVICE AND WHICH MAY BE AFFECTED BY THE WORK SHALL BE COMPLETED BEFORE AND AFTER WORK HAS COMMENCED. FINAL ACCEPTANCE BY THE CITY OF MASSILLON WILL NOT OCCUR UNTIL AFTER SAID INSPECTION. THE CONDITION OF THE EXISTING CONDUITS AND THEIR APPURTENANCES SHALL BE DETERMINED FROM FIELD OBSERVATIONS. RECORDS OF THE OBSERVATIONS SHALL BE PROVIDED IN WRITING BY THE CONTRACTOR TO THE CITY OF MASSILLON.

ALL NEW CONDUITS, INLETS, CATCH BASINS, AND MANHOLES CONSTRUCTED AS A PART OF THE PROJECT SHALL BE FREE OF ALL FOREIGN MATTER AND IN A CLEAN CONDITION BEFORE THE PROJECT WILL BE ACCEPTED BT THE CITY OF MASSILLON.

ALL EXISTING SEWERS INSPECTED INITIALLY BY THE ABOVE MENTIONED PARTIES SHALL BE MAINTAINED AND LEFT IN A CONDITION REASONABLY COMPARABLE TO THAT DETERMINED BY THE ORIGINAL INSPECTION. ANY CHANGE IN THE CONDITION RESULTING FROM THE CONTRACTOR'S OPERATIONS SHALL BE CORRECTED BY THE CONTRACTOR TO THE SATISFACTION OF THE ENGINEER.

PAYMENT FOR ALL OPERATIONS DESCRIBED ABOVE SHALL BE INCLUDED IN THE CONTRACT PRICE FOR THE PERTINENT 603 CONDUIT ITEMS.

ITEM 407, TACK COAT

THE RATE OF APPLICATION OF THE 407 TACK COAT SHALL BE SUBJECT TO ADJUSTMENT AS DIRECTED BY THE ENGINEER. QUANTITIES INDICATE AN AVERAGE APPLICATION RATE OF 0.08 GALLONS PER SQUARE YARD OF TACK COAT FOR ESTIMATING PURPOSES ONLY.

ITEM 408, BITUMINOUS PRIME COAT

THE RATE OF APPLICATION OF THE 408 PRIME COAT SHALL BE SUBJECT TO ADJUSTMENT AS DIRECTED BY THE ENGINEER. QUANTITIES INDICATE AN AVERAGE APPLICATION RATE OF 0.40 GALLONS PER SQUARE YARD OF PRIME COAT FOR ESTIMATING PURPOSES ONLY.

ITEM 659, TOPSOIL, SEEDING AND MULCHING

ITEM 659 SHALL BE APPLIED TO ALL EXPOSED SOIL AREAS DISTURBED DURING CONSTRUCTION. SUCH AS SPECIFIED IN ITEM 659 AND IS NOT LIMITED TO JUST TOPSOIL, SEEDING AND MULCHING.

THE CITY SHALL APPROVE SEED MIX PRIOR TO APPLICATION TO BE USED THROUGHOUT CONSTRUCTION LIMITS.

ITEM 603SPEC – PIPE CLEANOUT

THIS WORK SHALL CONSIST OF REMOVING SEDIMENT AND DEBRIS FROM THE EXISTING CONDUITS SPECIFIED IN THE FIELD. ALL MATERIAL REMOVED SHALL BE DISPOSED OF AS PER 203.05. ALL SEWERS SHALL BE CLEANED OUT TO THE SATISFACTION OF THE ENGINEER.

CLEANOUT OF THE PIPE SHALL BE PAID FOR AT THE UNIT PRICE BID FOR ITEM SPECIAL – PIPE CLEANOUT. THIS PRICE SHALL INCLUDE THE COST FOR MATERIAL, EQUIPMENT, LABOR, AND ALL INCIDENTALS REQUIRED TO COMPLETE THE CLEANOUT.

THE FOLLOWING ESTIMATE QUANTITIES HAVE BEEN INCLUDED IN THE GENERAL SUMMARY FOR THE ABOVE NOTED WORK:

603SPEC, PIPE CLEANOUT 50 L.F.

CONDITIONS OF WORK

ALL WORK PERFORMED UNDER THIS CONTRACT SHALL COMPLY WITH THE U.S. DEPARTMENT OF LABOR, OCCUPATIONAL SAFETY AND HEALTH ACT, STATE, COUNTY, AND CITY OF MASSILLON LAWS AND REGULATIONS. ALL WORK, AT ALL TIMES SHALL BE SUBJECT TO OBSERVATION BY THE CITY OF MASSILLON ENGINEER AND/OR HIS REPRESENTATIVE. ALL WORK SHALL COMPLY WITH THE CONDITIONS OF THE CONTRACT DOCUMENTS AND OHIO EPA, AND STANDARDS OF THE CITY OF MASSILLON. ALL ELECTRICAL WORK SHALL COMPLY WITH THE NATIONAL ELECTRICAL CODE, AND APPLICABLE CITY, COUNTY, STATE AND FEDERAL CODES.

IT SHALL BE THE RESPONSIBILITY OF THE CONTRACTOR TO MAINTAIN SAFE AND SATISFACTORY ACCESS TO ALL ABUTTING PROPERTIES TO THE PROJECT SITE. ADJACENT ROADS SHALL BE MAINTAINED AND KEPT CLEAN OF MUD AND OTHER DEBRIS THAT MAY BE CAUSED BY TRAFFIC EXITING THE WORK SITE. THE CONTRACTOR SHALL COORDINATE AND PROVIDE FOR ALL NECESSARY TRAFFIC CONTROL. TRAFFIC CONTROL SHALL FOLLOW THE MORE STRINGENT GUIDELINES OF THE CITY OF MASSILLON OR ODOT AT THE DESCREATION OF THE CITY OF MASSILLON ENGINEER.

IT SHALL BE THE RESPONSIBILITY OF THE CONTRACTOR TO PROVIDE AND MAINTAIN FACILITIES FOR A CONSTRUCTION OFFICE, EMPLOYEE PARKING, AND EMPLOYEE SANITARY FACILITIES. ON STREET PARKING WILL NOT BE PERMITTED. THE CONTRACTOR SHALL PROVIDE FOR THE LAWFUL OFF-SITE DISPOSAL OF DEMOLITION DEBRIS AND CONSTRUCTION WASTE.

NW NE SW SE

VERTICAL IN FEET 1 0.5 0

0 0.5 1
HORIZONTAL SCALE IN FEET

CHECKED BY: KAD
DATE: MAY, 2012
DRAWN BY: FPW
DATE: MAY, 2012

REVISIONS:

DATE	DESCRIPTION

1st St NE Improvement Project
Genral Notes
City of Massillon
Stark County, Ohio

Kathy Catazaro-Perry, Mayor
Massillon City of Champions

DRAWING NAME: 1StNEgnote1.DWG
CITY NUMBER: 10ss03

CONTRACTOR AVAILABILITY

THE CONTRACTOR SHALL SUPPLY THE ENGINEER WITH A 24 HOUR PHONE NUMBER WHERE THE CONTRACTOR SHALL BE AVAILABLE FOR EMERGENCIES.

RESTORATION

FOR SANITARY SEWER INSTALLED, TESTED, AND ACCEPTED UP TO MAY 15TH OF ANY CALENDAR YEAR, RESTORATION SHALL BE COMPLETE BY JUNE 30th OF THAT YEAR. FOR INSTALLATION OF SANITARY SEWER TESTED AND ACCEPTED FROM MAY 15th TO SEPTEMBER 30th OF ANY CALANDAR, YEAR RESTORATION SHALL BE COMPLETE BY NOVEMBER 15th OF THAT CALENDAR YEAR. FOR SANITARY SEWER INSTALLED, TESTED, AND ACCEPTED AFTER NOVEMBER 15TH OF ANY CALENDAR YEAR. RESTORATION SHALL BE COMPLETE BY MAY 15th OF THE NEXT CALENDAR YEAR.

ALL SOIL AREAS DISTURBED BY THE CONTRACTOR SHALL BE TOPSOILED, SEEDED AND MULCHED. COST TO BE INCLUDED IN THE UNIT PRICE BID FOR EACH ITEM OF AFFECTED WORK. TOPSOIL, SEEDING AND MULCHING SHALL NOT BE A SEPARATE PAY ITEM. THIS INCLUDES BACKFILLING, SEEDING AND MULCHING ALONG THE EDGE OF ALL PAVEMENT RESTORATION.

CONTRACTOR TO REPLACE ALL PAVEMENT MARKINGS. COST TO BE INCLUDED IN THE UNIT PRICE BID FOR PAVEMENT.

CONTRACTOR TO USE HOT APPLIED JOINT CRACK SEALER ON ASPHALT PAVEMENT AT ALL ENDS AND INTERSECTIONS.

CONTRACTOR'S EQUIPMENT – OPERATION STORAGE

A QUALIFIED FLAGGER SHALL BE EMPLOYED WHERE THE CONTRACTOR'S EQUIPMENT MUST MERGE WITH THE TRAFFIC STREAM. THE CONTRACTOR'S EQUIPMENT SHALL BE EQUIPPED WITH AT LEAST ONE AMBER FLASHING LIGHT. THE EQUIPMENT SHALL BE STORED AT A STORAGE AREA OUTSIDE THE R/W. THE LOCATION OF WHICH SHALL HAVE PRIOR APPROVAL OF THE ENGINEER. WHEN PARKING ALONG THE HIGHWAY, THE EQUIPMENT SHALL BE PLACED AND DELINEATED AS PER 614.03. NO EQUIPMENT SHALL BE PARKED IN THE MEDIAN OF THE HIGHWAY. ADEQUATE BARRICADE AND LIGHTS SHALL BE PLACED ON THE PAVEMENT SIDE OF THE EQUIPMENT TO IDENTIFY THE LIMITS OF THE EQUIPMENT. ALL OTHER EQUIPMENT, INCLUDING PRIVATE VEHICLES, SHALL BE STORED AT THE APPROVED CONTRACTOR'S STORAGE AREA. NO EQUIPMENT SHALL BE PARKED ON PRIVATE PROPERTY UNLESS PRIOR APPROVAL OF THE OWNER AND THE PROJECT ENGINEER/SUPERVISOR HAS BEEN GRANTED.

EXISTING DATA

EACH CONTRACTOR SHALL VISIT THE SITE PERSONALLY TO ASCERTAIN THE NATURE OF THE WORK AND BECOME THOROUGHLY FAMILIARIZED WITH THE SITE PRIOR TO BID SUBMISSION.

EXISTING STRUCTURES, GRADES, PIPING, ETC. ARE INDICATED IN APPROXIMATE LOCATION ON THE PLAN. INFORMATION SHOWN IS NOT GUARANTEED TO BE CORRECT AND COMPLETE. THE DATA SHALL BE VERIFIED IN THE FIELD BY THE CONTRACTOR. THE EXISTENCE OF FACILITIES ABOVE OR BELOW GROUND, WHICH MAY NOT BE SHOWN, WILL NOT BE A BASIS FOR A CLAIM FOR EXTRA WORK.

EXISTING UNDERGROUND UTILITIES SHOWN ARE RECORDS PROVIDED BY UTILITY COMPANIES AND ARE APPROXIMATE ONLY. SERVICE LATERALS ARE NOT SHOWN.

IT IS THE RESPONSIBILITY OF CONTRACTOR TO NOTIFY THE CITY, PRIOR TO BID OPENING OF NON-CONFORMING OR CONFLICTING INFORMATION.

EXCAVATED MATERIAL

ALL EXCAVATED MATERIAL AND ALL MATERIAL USED IN CONSTRUCTION OF THE WORK SHALL BE PILED AND STORED IN A MANNER THAT WILL NOT ENDANGER THE WORK AND THAT WILL LEAVE DRIVEWAYS OR OTHER CONTROLS UNOBSTRUCTED AND ACCESSIBLE WHILE THE WORK IS TO BE COMPLETED. SATISFACTORY PROVISIONS SHALL BE MADE FOR STREET DRAINAGE, AND NATURAL WATERCOURSES SHALL NOT BE OBSTRUCTED. DURING THE PROGRESS OF THE WORK, ALL MATERIAL PILES SHALL BE KEPT TRIMMED UP AND MAINTAINED IN A NEAT MANNER. ALL EXCAVATED WASTE MATERIAL SHALL BE REMOVED FROM THE PROJECT SITE, AS DIRECTED BY THE ENGINEER. THE WASTE SITE IS TO BE PROVIDED BY THE CONTRACTOR AT NO COST TO THE CITY, UNLESS OTHERWISE NOTED IN THE SPECIFICATIONS ALONG WITH A LETTER FROM THE PROPOSED WASTE SITE OWNER SITE, AS DIRECTED BY THE ENGINEER. THE WASTE SITE IS TO BE PROVIDED BY THE CONTRACTOR AT NO COST TO THE CITY, PERMITTING SUCH AND HOLDING THE CITY HARMLESS.

DOWN SPOUTS

ALL DOWN SPOUTS UNABLE TO BE CONNECTED TO THE STORM LATERAL SHALL BE CORE DRILLED THROUGH THE CURB AS PER ENGINEER'S DIRECTION.

CURB OPENING SHALL NOT GREATER THAN A 3 1/2" DIAMETER.

THE WORK ABOVE SHALL BE INCLUDED IN THE CONTRACT PRICE FOR ITEM 609.

WORKING AREA

NO EXCAVATION WITH SIDE SLOPES STEEPER THAN 2:1 AND/OR DEEPER THAN 2' WILL BE PERMITTED. OPEN CASTINGS AND PIPES SHALL BE LEFT SECURED WHEN THE SITE IS UNATTENDED BY THE CONTRACTOR. THE CONTRACTOR SHALL SECURE ALL SUCH EXCAVATIONS, OPEN CASTINGS AND PIPES AGAINST UNAUTHORIZED ENTRY COVERING WITH STEEL PLATES, TEMPORARY BACK FILLING, FENCING AND SECURITY SERVICES SHALL BE INCLUDED IN THE PRICE BID FOR THE WORK.

EROSION CONTROL

THE CONTRACTOR SHALL PREPARE AND SUBMIT A STORM WATER POLLUTION CONTROL PLAN TO THE CITY OF MASSILLON ENGINEER TO BE FORWARDED TO THE APPROPRIATE PERMITTING AGENCIES. SAID PLAN MUST COMPLY WITH THE MOST CURRENT RULES AND REGULATIONS OF THE CITY OF MASSILLON.

CONDITIONS OF WORK

ALL WORK PERFORMED UNDER THIS CONTRACT SHALL COMPLY WITH THE U.S. DEPARTMENT OF LABOR, OCCUPATIONAL SAFETY AND HEALTH ACT, STATE, COUNTY, AND CITY OF MASSILLON LAWS AND REGULATIONS. ALL WORK, AT ALL TIMES SHALL BE SUBJECT TO OBSERVATION BY THE OWNER AND/OR ENGINEER. ALL WORK SHALL COMPLY WITH THE CONDITIONS OF THE CONTRACT DOCUMENTS, OHIO EPA, AND STANDARDS OF THE CITY OF MASSILLON. ALL ELECTRICAL WORK SHALL COMPLY WITH THE NATIONAL ELECTRICAL CODE, AND APPLICABLE CITY, COUNTY, STATE AND FEDERAL CODES.

IT SHALL BE THE RESPONSIBILITY OF THE CONTRACTOR TO MAINTAIN SAFE AND SATISFACTORY ACCESS TO ALL ABUTTING PROPERTIES TO THE PROJECT SITE. ADJACENT ROADS SHALL BE MAINTAINED AND KEPT CLEAN OF MUD AND OTHER DEBRIS THAT MAY BE CAUSED BY TRAFFIC EXITING THE WORK SITE. THE CONTRACTOR SHALL COORDINATE AND PROVIDE FOR ALL NECESSARY TRAFFIC CONTROL. TRAFFIC CONTROL SHALL BE IN ACCORDANCE WITH CURRENT CITY OF MASSILLON RULES AND REGULATIONS AND THE OHIO MANUAL OF UNIFORM TRAFFIC CONTROL DEVICES.

IT SHALL BE THE RESPONSIBILITY OF THE CONTRACTOR TO PROVIDE AND MAINTAIN FACILITIES FOR A CONSTRUCTION OFFICE, EMPLOYEE PARKING, AND EMPLOYEE SANITARY FACILITIES. ON STREET PARKING WILL NOT BE PERMITTED. THE CONTRACTOR SHALL PROVIDE FOR THE LAWFUL OFF-SITE DISPOSAL OF DEMOLITION DEBRIS AND CONSTRUCTION WASTE.

REMOVAL OF TREES OR STUMPS

ALL TREES AND STUMPS REMOVED DURING CONSTRUCTION SHALL BE UNDER THE LUMP SUM BID FOR ITEM 201, CLEARING AND GRUBBING. THIS SHALL INCLUDE ALL TREES AND STUMPS WITHIN THE CONSTRUCTION LIMITS UNLESS OTHERWISE STATED BY CITY REPRESENTATIVE.

CONCRETE REMOVAL

ALL EXISTING CONCRETE INCLUDING CURBS, DRIVES, AND BASE ETC. WITHIN WORK LIMITS SHALL BE REMOVED AND PAID FOR UNDER:

ITEM 203 EXCAVATION INCLUDING ROADWAY

ITEM 614SPEC MAINTAINING TRAFFIC

THE CONTRACTOR SHALL BE RESPONSIBLE FOR DESIGNING AND MAINTAINING SAFE AND EFFECTIVE TRAFFIC CONTROL 24 HOURS A DAY FOR THE DURATION OF THIS PROJECT. ALL TRAFFIC CONTROL DEVICES (PAVEMENT MARKINGS, SIGNS, BARRELS, CONES, ETC.) SHALL BE FURNISHED, ERECTED, MAINTAINED, AND REMOVED BY THE CONTRACTOR.

ITEM 614SPEC MAINTAINING TRAFFIC CONTINUED

THE CONTRACTOR SHALL DEVISE A MAINTENANCE OF TRAFFIC SCHEME WHICH SHALL BE STAMPED BY A PROFESSIONAL ENGINEER, AND PRESENT IT TO THE ENGINEER FOR APPROVAL. THE MAINTENANCE OF TRAFFIC SCHEME SHALL PRESENT, IN GENERAL, THE METHOD FOR CONDUCTING THE REQUIRED WORK IN A SAFE AND EFFICIENT MANNER.

THE PLANS SHALL INCLUDE THE FOLLOWING COMPONENTS:

PLAN VIEW AT AN APPROPRIATE SCALE TO SHOW:
- WORK AREA
- BEGIN/END STATIONING OF TAPERS, TEMPORARY MARKINGS, ETC.
- TEMPORARY PAVEMENT
- LOCATIONS OF SIGNS (EXISTING OVERHEAD SIGNS AND ALL PROPOSED, COVERED, OR MODIFIED SIGNS)
- LOCATIONS OF TYPICAL SECTIONS
- REFERENCES TO APPLICABLE STANDARD DRAWINGS

TYPICAL SECTIONS SHOWING:
- LANE WIDTHS, PAVEMENT MARKINGS, DRUMS, PCB, ETC.
- LIMITING STATIONS
- WORK AREA AND DROP-OFFS

SIGN DETAILS FOR PROPOSED SIGNS AND OVERLAYS/MODIFICATIONS

THE MAINTENANCE OF TRAFFIC SCHEME SHALL BE IN CONFORMANCE WITH THE OHIO MANUAL OF UNIFORM TRAFFIC CONTROL DEVICES, LATEST REVISION, THE REFERENCED STANDARD CONSTRUCTION DRAWINGS INCLUDING DESIGNER NOTES, THE CONSTRUCTION AND MATERIAL SPECIFICATIONS (CMS), POLICY NO. 516-003(P) TRAFFIC MANAGEMENT IN WORK ZONES INTERSTATE AND OTHER FREEWAYS, ODOT LOCATION AND DESIGN MANUAL, VOLUME 1, AND ALL REQUIREMENTS DETAILED IN THESE PLANS.

THIS SUBMITTAL SHALL CONSIST OF THREE (3) COPIES OF THE PLANS FOR REVIEW AND DISTRIBUTION. NO WORK SHALL BEGIN AT THE LOCATION UNTIL THE MAINTENANCE OF TRAFFIC PLANS HAVE BEEN APPROVED BY THE CITY OF MASSILLON ENGINEER.

THE PROGRESS SCHEDULE WILL BE REQUIRED TO APPROVE THE MAINTENANCE OF TRAFFIC PLANS. THIS SCHEDULE OF OPERATIONS SHALL DETAIL THE CONTRACTOR'S WORK ACTIVITIES AND HIS METHODS OF MAINTAING TRAFFIC DURING THESE ACTIVITIES. MAINTENANCE OF TRAFFIC PLANS SHALL BE PREPARED AND SUBMITTED TO THE CITY OF MASSILLON ENGINEER FOR APPROVAL. THESE PLANS SHALL BE SEALED BY A REGISTERED PRFESSIONAL ENGINEER. THE DISTRICT SHALL HAVE 14 CALENDAR DAYS TO REVIEW AND COMMENT ON THESE PLANS. THE CONTRACTOR SHALL NOT BEGIN ANY WORK REQUIRING TRAFFIC CONTROL UNTIL THE ENGINEER HAS GIVEN APPROVAL OF THE CONTRACTOR'S SEQUENCE OF OPERATIONS AND MAINTENANCE OF TRAFFIC PLANS.

THE MAINTENANCE OF TRAFFIC SCHEME SHALL TAKE INTO CONSIDERATION SNOW AND ICE OPERATIONS FROM DECEMBER 1 THROUGH MARCH 31. LANE SHIFTS, RESTRICTIONS, AND CLOSURES MAY NOT BE APPROVED IF THEY ADVERSELY AFFECT SNOW REMOVAL OPERATIONS.

THIS WORK SHALL BE INCLUDED IN THE LUMP SUM PRICE FOR ITEM 614 – MAINTAINING TRAFFIC, AS PER PLAN.

FINAL APPROVAL

A VIDEO IN THE FORM OF DVD WILL BE MADE BY THE CONTRACTOR AND SUBMITTED TO THE CITY OF MASSILLON ENGINEER PRIOR TO THE PROJECT COMMENCING. AFTER THE FINAL INVOICE IS SUBMITTED THE SITE SHALL BE VIDEOED AGAIN BY THE CONTRACTOR. ANY DISCREPANCIES WILL BE RESOLVED PRIOR TO FINAL PAYMENT. AS BUILT DRAWINGS SHALL BE CREATED BY THE CONTRACTOR AND SUBMITTED TO THE CITY OF MASSILLON ENGINEER IN A CLEAR AND LEGENDABLE MANNER PRIOR TO FINAL INVOICE.

COST OF THIS WORK SHALL BE INCLUDED IN ITEM 623 CONSTRUCTION STAKING

SANITARY SEWER SPECIFICATIONS

SANITARY SEWER CONSTRUCTION PROPOSED FOR THIS PROJECT SHALL CONFORM TO THE LATEST CITY OF MASSILLON STANDARDS AND CONSTRUCTION AND MATERIALS SPECIFICATIONS, TEN STATE STANDARDS, AND THE LATEST EDITION OF THE ODOT CMS, OR MODIFIED BY THE CONTRACT DRAWINGS. IF A CONFLICT ARISES BETWEEN SAID STANDARDS IT SHALL BE AT THE DISCRETION OF THE CITY OF MASSILLON ENGINEER AS TO WHICH STANDARD SHALL GOVERN. THE PROJECT CONTRACT DRAWINGS SHALL GOVERN UNLESS NOTED OTHERWISE.

SANITARY GRAVITY SEWER PIPE AND FITTINGS SHALL BE PVC SDR 35 CONFORMING TO ASTM D-3034 UNLESS OTHERWISE NOTED. PVC COMPOUNDS SHALL CONFORM TO ASTM D-1784 PVC PIPE AND FITTINGS SHALL HAVE BELL AND SPIGOT TYPE JOINTS CONFORMING TO ASTM D-3212 AND GASKETS CONFORMING TO ASTM F-477

BACKFILL IN SEWER TRENCHES SHALL CONFORM TO ODOT ITEM 603.10 AND BE PLACED IN LAYERS SUFFICIENT TO MEET THE COMPACTION REQUIREMENT OF 100% OF MAXIMUM LABORATORY DRY DENSITY PER ASTM D-698 AND THOROUGHLY COMPACTED WITH MACHINE MOUNDED COMPACTION EQUIPMENT. THE PLACING OF BACKFILL MATERIAL SHALL BE CONTINUED UNTIL THE TRENCH IS ENTIRELY FILLED AND COMPACTED WITH THE APPROVED GRANULAR MATERIAL TO THE GRADE CALLED FOR ON THE CONTRACT DRAWINGS. EXCAVATED MATERIAL CONFORMING TO ODOT ITEM 203 SHALL BE USED FOR BACKFILLING EXISTING STRUCTURES (AFTER REMOVAL) ONLY. CRUSHED GRAVEL CONFORMING TO GRADATION REQUIREMENTS OF ODOT ITEM 304 OR APPROVED EQUAL AS SHOWN IN ODOT TABLE 703-1 SHALL BE USED FOR BACKFILLING ALL SEWER TRENCH AREAS SHOWN ON THE PLANS AND AS DIRECTED BY THE CITY OF MASSILLON ENGINEER. FLOODING, JETTING, OR PUDDLING OF BACKFILL MATERIAL WILL NOT BE PERMITTED UNLESS APPROVED BY THE CITY OF MASSILLON ENGINEER. COMPACTION TESTING OF THE BACKFILL BY A GEOTECHNICAL ENGINEER MAY BE REQUIRED BY THE OWNER AT THE EXPENSE OF THE CONTRACTOR.

SANITARY SEWERS SHALL BE AIR TESTED FOR LEAKAGE AND MANDREL TESTED FOR DEFLECTION. THE MAXIMUM ALLOWABLE PIPE DEFLECTION SHALL BE 5%.

PRIOR TO FINAL PAYMENT FOR AND ACCEPTANCE OF SANITARY SEWER INSTALLATION THE RESULTS OF THE AIR PRESSURE TESTS, TELEVISION TESTS AND MADREL TESTS SHALL BE FORWARDED TO THE CITY OF MASSILLON ENGINEER.

DEFLECTION TESTING

MAXIMUM ALLOWABLE PIPE DEFLECTION (REDUCTION IN VERTICAL INSIDE DIAMETER) SHALL BE 5%. DEFLECTION TESTS OF PIPE SHALL BE PERFORMED NOT SOONER THAN 30 DAYS AFTER THE BACKFILL HAS BEEN PROPERLY PLACED AND BEFORE FINAL ACCEPTANCE. LOCATIONS WITH EXCESS DEFLECTION SHALL BE EXCAVATED AND REPAIRED BY RE-BEDDING OR REPLACEMENT OF THE PIPE AT THE CONTRACTOR'S EXPENSE. DEVICES FOR TESTING INCLUDE A DEFLECTOMETER METER, OR PROPERLY SIZED (60, NO-GO) MANDREL OR SEWER BALL. THE DEFLECTION TESTING MUST BE CONDUCTED WITHOUT MECHANICAL PULLING DEVICES. FOR THE PURPOSE OF DEFLECTION MEASUREMENTS, THE BASE INSIDE PIPE DIAMETERS WITHOUT DEFLECTION ARE PROVIDED IN TABLE A. THE MAXIMUM ALLOWABLE DEFLECTION SHALL BE APPLIED TO THE BASE INSIDE DIAMETER IN DETERMINING THE MINIMUM PERMISSIBLE DIAMETER. IT MUST BE EMPHASIZED THAT TO INSURE ACCURATE TESTING, THE LINES MUST BE THOROUGHLY CLEANED.

TABLE A
INSIDE DIAMETERS FOR DEFLECTION MEASUREMENTS
OF ASTM D 3034 SDR 35 / SDR 21 PVC SEWER PIPE

SIZE	SDR	AVG. O.D.	BASE I.D.	DEFLECTION MANDREL
6"	35	6.275	5.742	5.54
8"	35	8.400	7.665	7.28
10"	35	10.500	9.563	9.08
12"	35	12.500	11.361	10.79

TELEVISION TESTING

ALL SANITARY SEWERS, 8-INCH DIAMETER AND LARGER, MUST PASS AN INTERNAL TELEVISION INSPECTION. THE CONTRACTOR SHALL PROVIDE A COMPLETE INTERNAL INSPECTION DVD TO THE CITY OF MASSILLON ENGINEERING DEPARTMENT. THE RECORDING PROCEDURE SHALL BE IN ACCORDANCE WITH CITY OF MASSILLON ENGINEERING DEPARTMENT STANDARDS.

LEAKAGE TESTS

LEAKAGE TESTS SHALL BE PERFORMED WHICH MAY INCLUDE APPROPRIATE WATER OR LOW PRESSURE AIR TESTING. THE TESTING METHODS SELECTED SHOULD TAKE INTO CONSIDERATION THE RANGE IN GROUNDWATER ELEVATIONS DURING THE TEST AND ANTICIPATED DURING THE DESIGN LIFE OF THE SEWER COMPLETED AND ACCEPTED.

NW NE SW SE

VERTICAL IN FEET 1 0.5 0

0 0.5 1
HORIZONTAL SCALE IN FEET

CHECKED BY: KAD
DATE: MAY, 2012
DRAWN BY: FPW
DATE: MAY, 2012

REVISIONS:

DATE	DESCRIPTION

1st St NE Improvement Project
Genral Notes
City of Massillon
Stark County, Ohio

Kathy Catazaro-Perry, Mayor
Massillon
City of Champions

DRAWING NAME: 1StNEgnote2.DWG
CITY NUMBER: 10ss03

WATER (HYDROSTATIC) TEST

THE LEAKAGE EXFILTRATION OR INFILTRATION SHALL NOT EXCEED 100 GALLONS PER INCH OF PIPE DIAMETER PER MILE PER DAY [9L/(MM OF PIPE DIAMETER KM D)] FOR ANY SECTION OF THE SYSTEM. AN EXFILTRATION OR INFILTRATION TEST SHALL BE PERFORMED WITH A MINIMUM POSITIVE HEAD OF 2 FEET (0.6 M).

AIR TESTING AS PER ASTM F1417

AIR TESTING WILL BE CONDUCTED AS THE PROJECT IS BEING CONSTRUCTED. AT NO TIME WILL MORE THAN 900 FEET OF PIPE BE INSTALLED BEFORE AIR TESTING IS PERFORMED. SEWAGE WILL NOT BE DIVERTED TO ANY SECTION OF PIPE, REGARDLESS OF LENGTH, UNTIL ALL TESTING IS COMPLETED AND ACCEPTED.

AFTER BACKFILLING A MANHOLE TO MANHOLE REACH OF SANITARY SEWER LINE, THE CONTRACTOR SHALL, AT HIS EXPENSE, CONDUCT THE LINE ACCEPTANCE TESTS. THE TESTS SHALL BE PERFORMED ACCORDING TO THE STATED PROCEDURES AND UNDER THE SUPERVISION OF THE CITY OF MASSILLON ENGINEER OR HIS REPRESENTATIVE.

EQUIPMENT USED SHALL MEET THE FOLLOWING MINIMUM REQUIREMENTS AND BE APPROVED BY THE CITY OF MASSILLON ENGINEER:

1. PNEUMATIC PLUGS SHALL HAVE A SEALING LENGTH EQUAL TO OR A GREATER THAN THE DIAMETER OF THE PIPE BEING INSPECTED.
2. PNEUMATIC PLUGS SHALL RESIST INTERNAL TEST PRESSURES WITHOUT REQUIRED EXTERNAL BRACING OR BLOCKING.
3. ALL AIR USED SHALL PASS THROUGH A SINGLE CONTROL PANEL.
4. THREE INDIVIDUAL HOSES SHALL BE USED FOR THE FOLLOWING CONNECTIONS:
   a. FROM CONTROL PANEL TO PNEUMATIC PLUGS FOR INFLATION.
   b. FROM CONTROL PANEL TO SEALED LINE FOR INTRODUCING THE LOW PRESSURE AIR.
   c. FROM SEALED LINE TO CONTROL PANEL FOR CONTINUALLY MONITORING AIR PRESSURE RISE IN THE SEALED LINE.

ALL PNEUMATIC PLUGS SHALL BE SEAL TESTED BEFORE BEING USED IN THE ACTUAL TEST INSTALLATION. ONE LENGTH OF PIPE SHALL BE LAID ON THE GROUND AN SEALED AT BOTH ENDS WITH THE PNEUMATIC PLUGS TO BE CHECKED. THE SEALED PIPE SHALL BE PRESSURED TO 5 PSIG. THE PLUGS MUST HOLD AGAINST THIS PRESSURE WITHOUT HAVING TO BE BRACED.

AFTER A MANHOLE TO MANHOLE REACH OF PIPE HAS BEEN BACKFILLED AND CLEANED, AND THE PNEUMATIC PLUGS ARE CHECKED BY THE ABOVE PROCEDURE, THE PLUGS SHALL BE PLACED IN THE LINE AT EACH MANHOLE. LOW PRESSURE AIR SHALL BE SLOWLY INTRODUCED INTO THIS SEALED LINE UNTIL THE INTERNAL AIR PRESSURE REACHES APPROXIMATELY 4 PSIG.

AT LEAST TWO MINUTES SHALL BE ALLOWED FOR THE AIR PRESSURE TO STABILIZE. WHEN THE PRESSURE HAS STABILIZED AND IS AT OR ABOVE 3.5 PSIG, THE AIR HOSE FROM THE CONTROL PANEL TO THE AIR SUPPLY SHALL BE DISCONNECTED. THE PORTION OF THE LINE BEING TESTED SHALL BE TERMED "ACCEPTABLE" IF THE TIME REQUIRED IN MINUTES FOR THE PRESSURE TO DECREASE FROM 3.5 TO 2.5 PSIG (GREATER THEN THE AVERAGE BACK PRESSURE OF ANY GROUNDWATER THAT MAY BE OVER THE PIPE) SHALL NOT BE LESS THAN THE TIME SHOWN FOR THE GIVEN DIAMETERS IN THE FOLLOWING TABLE:

PIPE DIAMETER IN.	MINIMUM TIME MINUTES	LENGTH FOR MINUTES TIME, FT.	TIME FOR LONGER LENGTH, S	SPECIFICATION TIME LENGTH (L) SHOWN, MINUTES							
				100 FT.	150 FT.	200 FT.	250 FT.	300 FT.	350 FT.	400 FT.	450 FT.
4	3:46	597	0.380 L	3:46	3:46	3:46	3:46	3:46	3:46	3:46	3:46
6	5:40	398	0.854 L	5:40	5:40	5:40	5:40	5:40	5:40	5:42	6:24
8	7:34	298	1.520 L	7:34	7:34	7:34	7:36	7:36	8:52	10:08	11:24
10	9:26	239	2.374 L	9:26	9:26	9:26	9:53	11:52	13:51	15:49	17:48
12	11:20	198	3.416 L	11:20	11:20	11:24	14:15	17:05	19:56	22:47	25:38
15	14:10	159	6.342 L	14:10	14:10	17:46	22:15	26:42	31:09	35:36	40:04
18	17:0	133	7.692 L	17:00	19:13	25:38	32:09	38:27	44:52	51:16	57:41
21	19:50	114	10.470 L	19:50	26:10	36:54	43:37	52:21	XX:XX	69.48	78:31
24	22:40	99	13.674 L	22:47	34:11	45:34	56:58	68:22	76:46	91:10	102:33
27	25:30	88	17.306 L	28:51	43:16	57:41	72:07	86:32	100:57	115:22	129:48
30	28:20	80	21.366 L	35:37	53:25	71:13	89:02	106:50	124:38	142:26	160:15
33	31:10	72	25.852 L	49:05	64:38	86:10	107:43	129:16	150:43	172:21	193:53
36	34:00	66	30.768 L	51:17	76:55	102:34	128:12	153:50	170.29	205:07	230:46

IN AREAS WHERE GROUND WATER IS KNOWN TO EXIST, THE CONTRACTOR SHALL INSTALL A 1/2 INCH DIAMETER CAPPED PIPE NIPPLE APPROXIMATELY 10 INCHES LONG, THROUGH THE MANHOLE WALL ON TOP OF ONE OF THE SANITARY SEWER LINES ENTERING THE MANHOLE. THIS SHALL BE DONE AT THE TIME THE SANITARY SEWER LINE IS INSTALLED. IMMEDIATELY PRIOR TO THE PERFORMANCE OF THE LINE ACCEPTABILITY TEST, THE GROUND WATER SHALL BE DETERMINED BY REMOVING THE PIPE CAP, BLOWING AIR THROUGH THE PIPE NIPPLE IN THE GROUND SO AS TO CLEAR IT, AND THEN CONNECTING A CLEAR PLASTIC TUBE TO THE NIPPLE. THE PLASTIC TUBE SHALL BE VERTICAL AND A MEASUREMENT OF THE HEIGHT, IN FEET OF WATER OVER THE INVERT OF THE PIPE, SHALL BE TAKEN AFTER THE WATER HAS STOPPED RISING IN THIS PLASTIC TUBE. THE HEIGHT, IN FEET OF WATER OVER THE INVERT OF THE PIPE, SHALL BE TAKEN AFTER THE WATER HAS STOPPED RISING IN THIS PLASTIC TUBE. AIR TEST PRESSURE IS TO BE INCREASED BY 0.433 PSI FOR EACH FOOT THE GROUND WATER IS ABOVE THE INVERT OF THE SEWER LINE BEING TESTED. THE ALLOWABLE DROP OF ONE POUND AND THE TIMING OF THE TEST REMAIN THE SAME.

IF A LINE ACCEPTABILITY TEST IS BEING CONDUCTED ON MORE THAN ONE MANHOLE REACH OF PIPE, THE ENTIRE SECTION BEING TESTED SHALL MEET THE LINE ACCEPTABILITY REQUIREMENTS AS IF ONLY ONE (1) OF THE MANHOLE REACHES IN THE SECTION WERE BEING TESTED.

NEGATIVE AIR PRESSURE (VACUUM) TESTING OF MANHOLES AS PER ASTM C-1244

PREPARATION OF THE MANHOLE:

A. ALL LIFT HOLES SHALL BE PLUGGED.

B. ALL PIPES ENTERING THE MANHOLE SHALL BE TEMPORARILY PLUGGED, TAKING CARE TO SECURELY BRACE THE PIPES AND PLUGS TO PREVENT THEM FROM BEING DRAWN INTO THE MANHOLE.

PROCEDURE:

A. THE TEST HEAD SHALL BE PLACED AT THE TOP OF THE MANHOLE IN ACCORDANCE WITH THE MANUFACTURER'S RECOMMENDATIONS.

B. A VACUUM OF 10 IN. OF MERCURY SHALL BE DRAWN ON THE MANHOLE, THE VALVE ON THE VACUUM LINE OF THE TEST HEAD CLOSED, AND THE VACUUM PUMP SHUT OFF. THE TIME SHALL BE MEASURED FOR THE VACUUM TO DROP TO 9 IN OF MERCURY.

C. THE MANHOLE SHALL PASS IF THE TIME FOR THE VACUUM READING TO DROP FROM 10 IN. OF MERCURY TO 9 IN. OF MERCURY MEETS OR EXCEEDS THE VALUES INDICATED IN TABLE BELOW.

DEPTH (FT)	MINIMUM TEST TIMES FOR MANHOLES								
	DIAMETER, IN.								
	30	33	36	42	48	54	60	66	72
	TIME, IN SECONDS								
8	11	12	14	17	20	23	26	29	33
10	14	15	18	21	25	29	33	36	41
12	17	18	21	25	30	35	39	43	49
14	20	21	25	30	35	41	46	51	57
16	22	24	39	34	40	46	52	58	67
18	25	27	32	38	45	52	59	65	73
20	28	30	35	42	50	53	65	72	81

CLEAN WATER STATEMENT

ROOF DRAINS, FOUNDATION DRAINS, AND OTHER CLEAN WATER CONNECTIONS TO THE SANITARY SEWER ARE PROHIBITED.

RELATION TO WATER MAINS

SEWERS SHALL BE LAID AT LEAST 10 FEET HORIZONTALLY FROM ANY EXISTING OR PROPOSED WATER MAIN. THE DISTANCE SHALL BE MEASURED EDGE TO EDGE.

SEWERS CROSSING WATER MAINS SHALL BE LAID TO PROVIDE A MINIMUM VERTICAL DISTANCE OF 18 INCHES BETWEEN THE OUTSIDE OF THE WATER MAIN AND THE OUTSIDE OF THE SEWER.

WORKING AREA

NO EXCAVATION WITH SIDE SLOPES STEEPER THAN 2:1 AND/OR DEEPER THAN 2', OPEN CASTINGS AND PIPES SHALL BE LEFT EXPOSED WHEN THE SITE IS UNATTENDED BY THE CONTRACTOR. THE CONTRACTOR SHALL SECURE ALL SUCH EXCAVATIONS, OPEN CASTINGS AND PIPES AGAINST UNAUTHORIZED ENTRY COVERING WITH STEEL PLATES, TEMPORARY BACKFILLING, FENCING AND SECURITY SERVICES SHALL BE INCLUDED IN THE PRICE BID FOR THE WORK.

CENTERLINE CONTROL

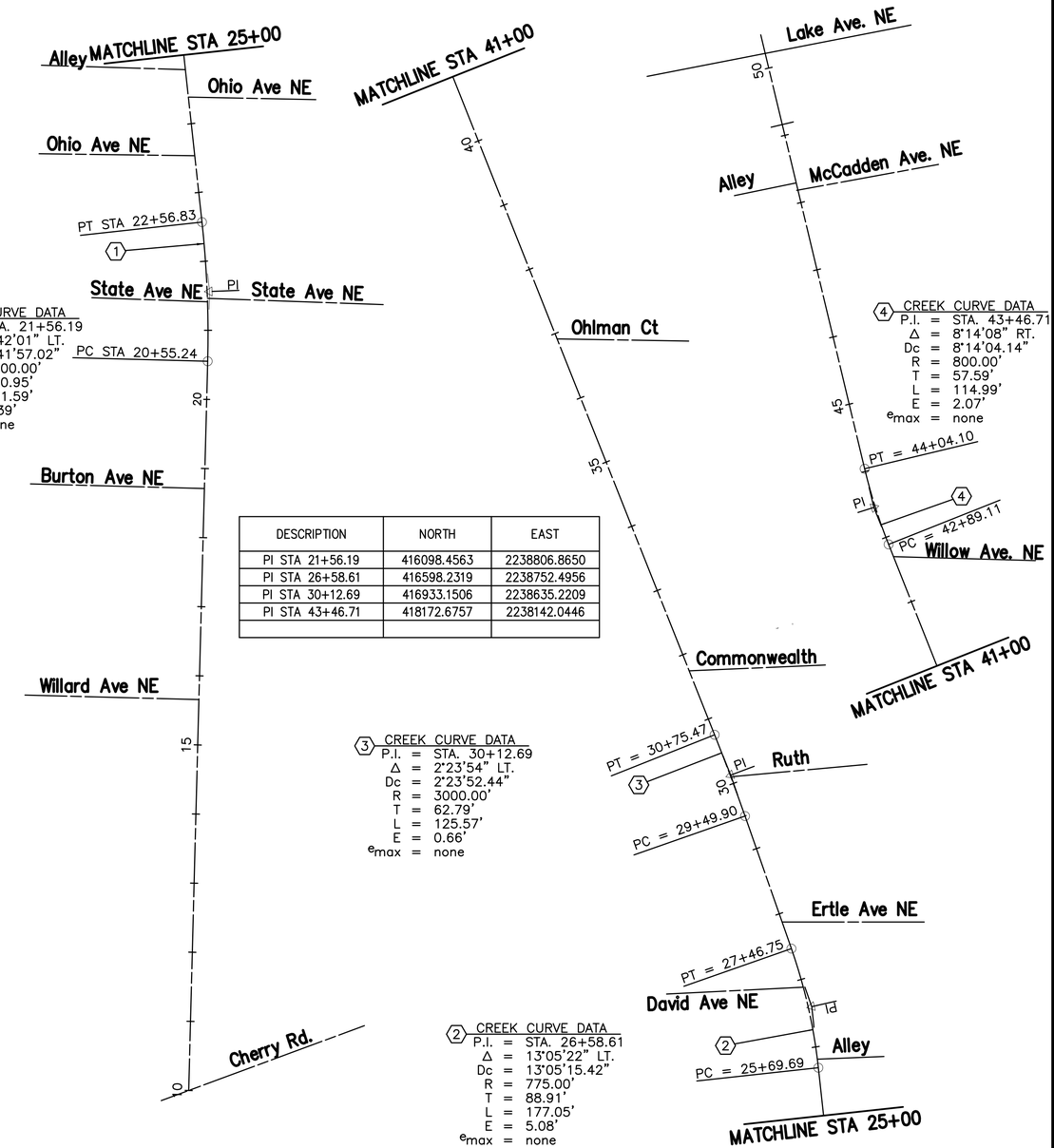

1 CREEK CURVE DATA
P.I. = STA. 21+56.19
Δ = 7°42'01" LT.
Dc = 7°41'57.02"
R = 1500.00'
T = 100.95'
L = 201.59'
E = 3.39'
e_{max} = none

DESCRIPTION	NORTH	EAST
PI STA 21+56.19	416098.4563	2238806.8650
PI STA 26+58.61	416598.2319	2238752.4956
PI STA 30+12.69	416933.1506	2238635.2209
PI STA 43+46.71	418172.6757	2238142.0446

3 CREEK CURVE DATA
P.I. = STA. 30+12.69
Δ = 2°23'54" LT.
Dc = 2°23'52.44"
R = 3000.00'
T = 62.79'
L = 125.57'
E = 0.66'
e_{max} = none

2 CREEK CURVE DATA
P.I. = STA. 26+58.61
Δ = 13°05'22" LT.
Dc = 13°05'15.42"
R = 775.00'
T = 88.91'
L = 177.05'
E = 5.08'
e_{max} = none

4 CREEK CURVE DATA
P.I. = STA. 43+46.71
Δ = 8°14'08" RT.
Dc = 8°14'04.14"
R = 800.00'
T = 57.59'
L = 114.99'
E = 2.07'
e_{max} = none

NW NE SW SE

VERTICAL IN FEET 1 .5 0

HORIZONTAL SCALE IN FEET 1 .5 0

CHECKED BY: KAD
DATE: MAY, 2012
DRAWN BY: FPW
DATE: MAY, 2012

REVISIONS: DATE | DESCRIPTION

1st St NE Improvement Project
Genral Notes
City of Massillon
Stark County, Ohio

Kathy Catazaro-Perry, Mayor
Massillon City of Champions

DRAWING NAME: bitofedennote2.DWG
CITY NUMBER: 10ss03

GENERAL SUMMARY

SHEET No. 2	3		7	8	9	10	11	12	13	14	15	16	18	22	23		ITEM	GRAND TOTAL	UNIT	DESCRIPTION
																				ROADWAY
	LUMP																201SPEC	LUMP	LUMP	CLEARING AND GRUBBING
													1036				202	1036	EACH	PIPE REMOVED
													2				202	2	EACH	MANHOLE REMOVED
													20				202	20	EACH	CATCH BASIN REMOVED
													8				202	8	EACH	JUNCTION CHAMBER REMOVED
													3				202	3	EACH	BULK HEAD
			130	5	150	30	2	82	85		38	3					203	525	C.Y.	ROADWAY EXCAVATION
																				DRAINAGE
			43														603	43	LF	8" TYPE B CONDUIT
			5								5						603	10	LF	10" TYPE B CONDUIT
			80		144			38	64		12						603	338	LF	12" TYPE B CONDUIT
					42			193	150		37						603	422	LF	15" TYPE B CONDUIT
					327			17			5						603	349	LF	18" TYPE B CONDUIT
											14						603	14	LF	30" TYPE B CONDUIT
											5						603	5	LF	42" TYPE B CONDUIT
	50																603SPEC	50	LF	PIPE CLEANOUT
			3		9			5	4		2						604	23	EACH	CATCH BASIN MASS7030
								1			2						604	3	EACH	CATCH BASIN MASS7031
					1												604	1	EACH	DRAINAGE MANHOLE MASS1045
											1						604	1	EACH	DRAINAGE MANHOLE MASS1046
			1		1		1	2			1						604	6	EACH	DRAINAGE MANHOLE MASS1048-R
																				PAVEMENT
																	251	150	SY	PARTIAL DEPTH PAVEMENT REPAIR
																	253	297	SY	FULL DEPTH PAVEMENT REPAIR
			1434	1454	1563	1552	1326	1326	1457	1430	1656	1468					254	14625	SY	2" PAVEMENT PLANING
140																	304	140	CY	6" AGGREGATE BASE
373																	310	62	CY	10" ASPHALT CONCRETE BASE
	1404																407	1404	GAL	TACK COAT (0.10 GAL/SG YD)
			83	81	87	87	74	73	80	80	91	82					448	812	CY	ASPHALT CONCRETE SURFACE, TYPE 1, PG64-22
118																	452	118	SY	NON-REINFORCED CONCRETE PAVEMENT
			2	2	6	8	4	4	2		2	2					608	32	EACH	CURB RAMPS ADA SPEC
			166	122	229	212	84	107	24		179						608	1123	SF	4" CONCRETE WALK
1343																	609	807	LF	CURB, TYPE 6
																	705	100	GAL	JOINT SEALER
																				SANITARY
														60			603	60	LF	6" SDR 35 (LATERAL)
							139										603	139	LF	8" SDR 35
								10									603	10	LF	12" SDR 35
							1	1									604	2	EACH	SANITARY MANHOLE MASS1048-AGS
			2	2	3	3	1										604	11	EACH	SANITARY MANHOLE MASS1048-AGS-R
																				EROSION CONTROL
	LUMP																659	LUMP	LUMP	TOP SOIL SEEDING AND MULCHING
																				MAINTENANCE OF TRAFFIC
		LUMP															614SPEC	LUMP	LUMP	MAINTENANCE OF TRAFFIC
																				TRAFFIC CONTROL
															0.69		642	0.69	MILE	4" YELLOW CENTERLINE, TYPE II (2-DIR) NO PASS
															150		644	150	LF	6" CHANNELIZING LINE, TYPE II
															80		644	80	LF	12" STOP LINE, TYPE II
															376		644	376	LF	8" CROSSWALK LINE, TYPE II
															4		644	4	EACH	LANE ARROW, TYPE II
																				INCIDENTALS
																	619	LUMP	LUMP	FIELD OFFICE
																	623	LUMP	LUMP	CONSTRUCTION STAKING
																	624	LUMP	LUMP	MOBILIZATION

NW NE SW SE

VERTICAL IN FEET 0 0.5 1

0 0.5 1
HORIZONTAL SCALE IN FEET

CHECKED BY: KAD
DATE: MAY, 2012
DRAWN BY: FPW
DATE: MAY, 2012

REVISIONS:

DATE	DESCRIPTION

1st St NE Improvement Project
General Summary
City of Massillon
Stark County, Ohio

Kathy Catazaro-Perry, Mayor
Massillon City of Champions

DRAWING NAME: 1StNEgsum.DWG
CITY NUMBER: 10ss03

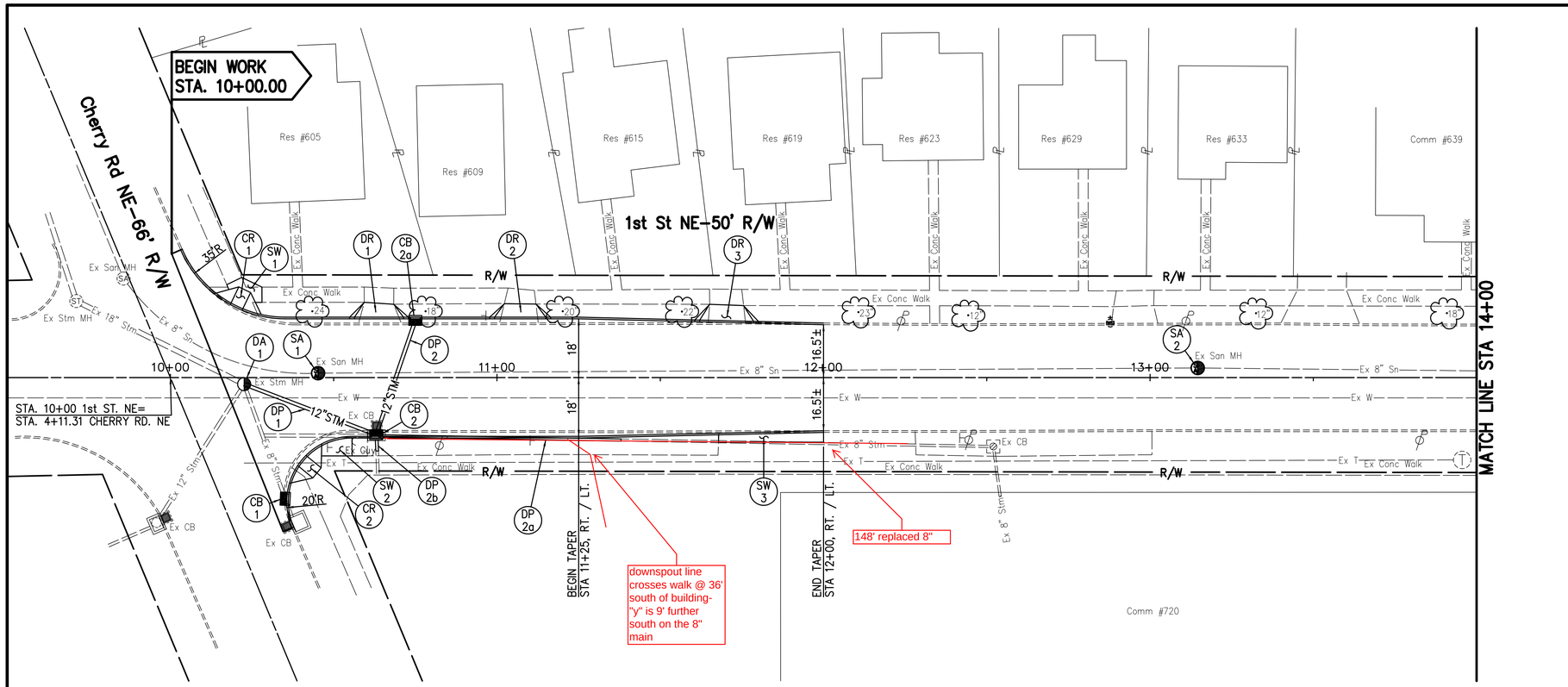

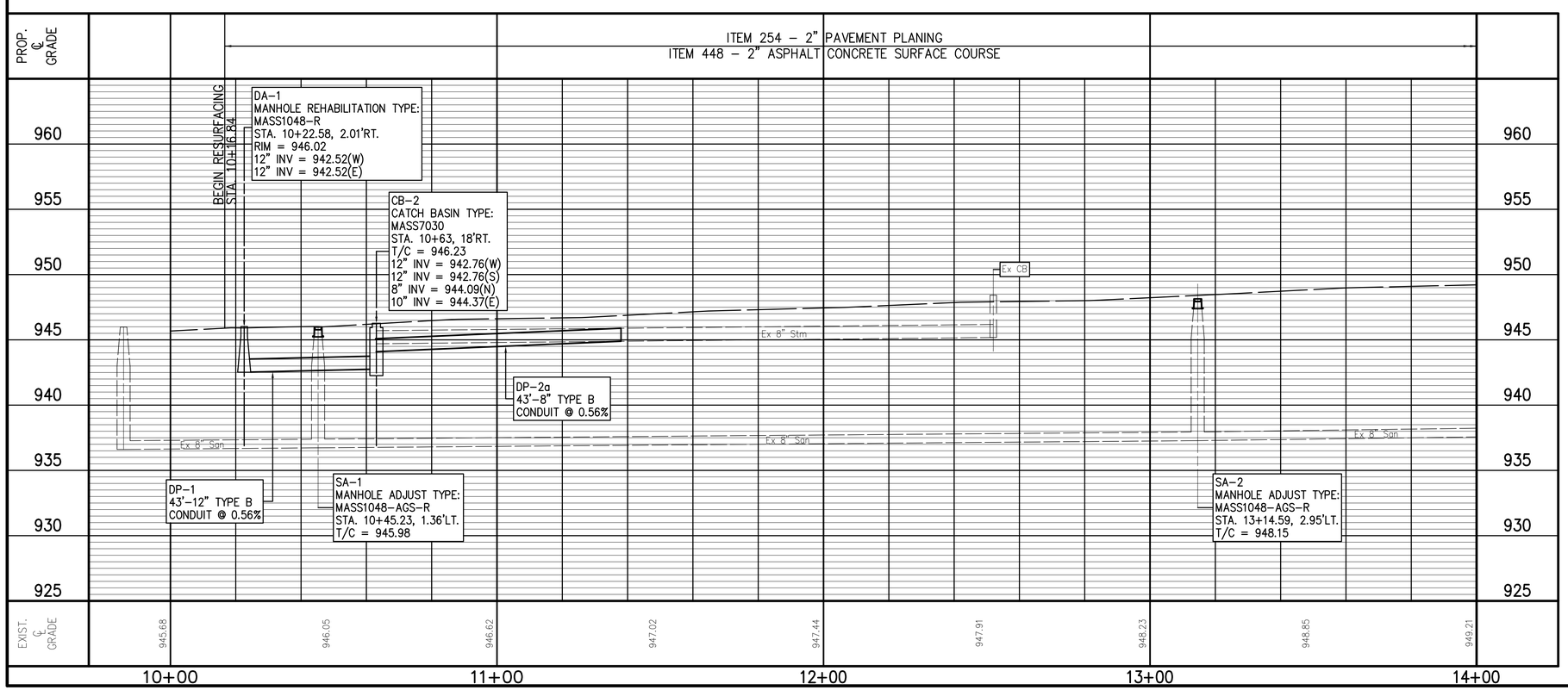

REF. No.	SIDE	STATION FROM	STATION TO	203 ROADWAY EXCAVATION (CY)	254 2" PAVEMENT PLANING (SF)	448 2" ASPHALT CONCRETE SURFACE COURSE (SY)	603 DRAINAGE 8" TYPE B CONDUIT (LF)	603 DRAINAGE 10" TYPE B CONDUIT (LF)	603 DRAINAGE 12" TYPE B CONDUIT (LF)	604 CATCH BASIN MASS7030 (EACH)	604 DRAINAGE MANHOLE MASS1048R (EACH)	604 SANITARY MANHOLE MASS1048-AGS-R (EACH)	608 CURB RAMP (EACH)	608 CONCRETE WALK (SF)
CB-1	RT	10+35.65								1				
CB-2	RT	10+63								1				
CB-2a	LT	10+75								1				
CR-1	LT	10+20.13											1	
CR-2	RT	10+40.17											1	
DA-1	XX	10+22.58									1			
DP-1	XX	10+63	10+22.58					43	43					
DP-2	XX	10+75	10+63				43		37					
DP-2a	XX	11+38	10+63											
DP-2b	XX	10+63	10+63					5						
SA-1	LT	10+45.23										1		
SA-2	LT	13+14.59										1		
SW-1	LT	10+17.60	10+28.03											37
SW-2	RT	10+46.35	10+55.63											44
SW-3	RT	11+67.86	12+00											85
TOTALS CARRIED TO GENERAL SUMMARY				130	1434	83	43	5	80	3	1	2	2	166

VERTICAL IN FEET 5 2.5 0

0 10 20 HORIZONTAL SCALE IN FEET

CHECKED BY: KAD
DATE: MAY, 2012
DRAWN BY: FPW
DATE: MAY, 2012

REVISIONS:

DATE	DESCRIPTION

1st St NE Improvement Project

Title Sheet

City of Massillon
Stark County, Ohio

Kathy Catazaro-Perry, Mayor
Massillon City of Champions

DRAWING NAME: 1StNEPP1.DWG
CITY NUMBER: 10st03

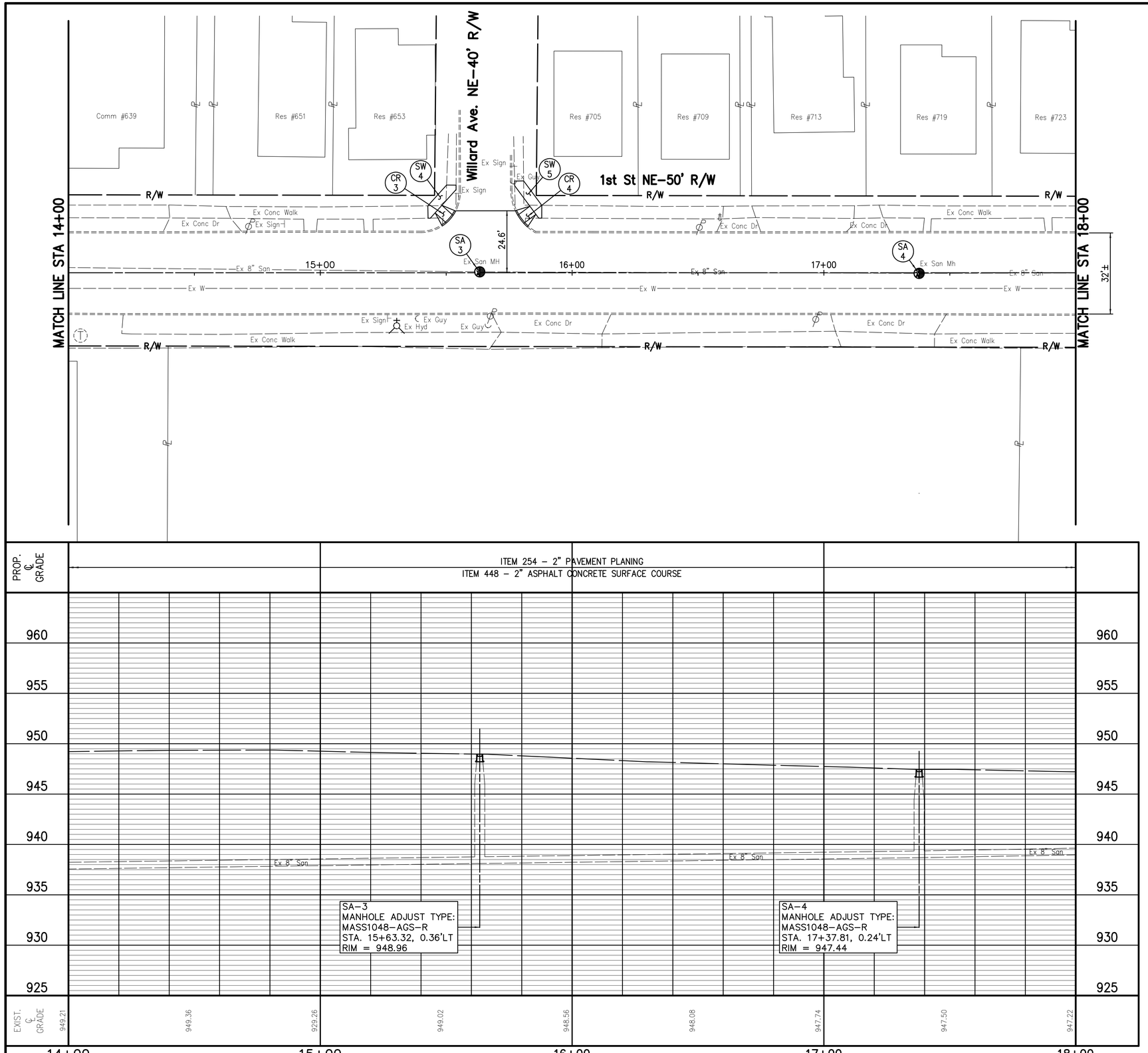

REF. No.	SIDE	STATION FROM	STATION TO	203 ROADWAY EXCAVATION CY	254 2" PAVEMENT PLANING SF	448 2" ASPHALT CONCRETE SURFACE COURSE SY	604 SANITARY MANHOLE MASS1048-AGS-R EACH	608 CURB RAMP EACH	608 CONCRETE WALK SF
CR-3	LT	15+51.50						1	
CR-4	LT	15+76.54						1	
SA-3	LT	15+63.32					1		
SA-4	RT	17+37.81					1		
SW-4	LT	15+42.81	15+53.92						59
SW-5	LT	15+77.21	15+87.93						63
ALL	RT / LT	14+00	18+00	5	1454	81		2	122
TOTALS CARRIED TO GENERAL SUMMARY				5	1454	81	2	2	122

VERTICAL IN FEET 5 2.5 0

HORIZONTAL SCALE IN FEET 0 10 20

CHECKED BY: KAD
DATE: MAY, 2012
DRAWN BY: FPW
DATE: MAY, 2012

REVISIONS:

DATE	DESCRIPTION

1st St NE Improvement Project
Plan and Profile Sta 14+00 to Sta 18+00
City of Massillon
Stark County, Ohio

Kathy Catazaro-Perry, Mayor
Massillon
City of Champions

DRAWING NAME: 1StNEPP2.DWG
CITY NUMBER: 10st03

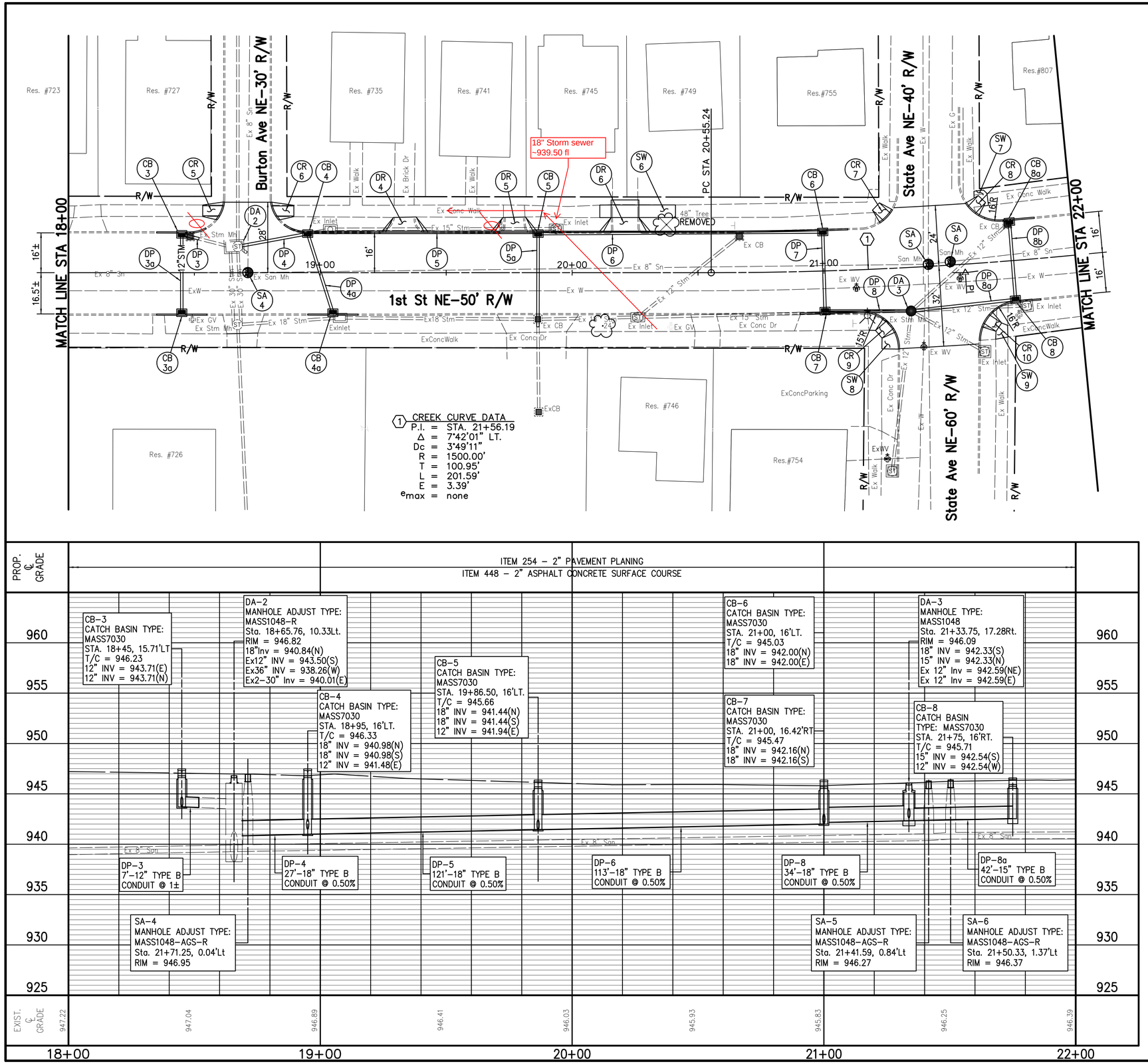

REF. No.	SIDE	STATION FROM	STATION TO	203 ROADWAY EXCAVATION	254 2" PAVEMENT PLANING	448 2" ASPHALT CONCRETE SURFACE COURSE	603 12" TYPE B CONDUIT	603 15" TYPE B CONDUIT	603 18" TYPE B CONDUIT	608 CONCRETE WALK
				CY	SY	CY	LF	LF	LF	SF
DP-3	LT	18+45	18+50				7			
DP-3a	RT/LT	18+45	18+45				33			
DP-4	LT	18+95	18+65.76						27	
DP-4a	RT/LT	19+05	18+95				34			
DP-5	LT	19+86.50	18+95						121	
DP-5a	RT/LT	19+86.50	19+86.50				38			
DP-6	LT	21+00	19+86.50						113	
DP-7	RT/LT	21+00	21+00						32	
DP-8	RT	21+33.75	21+00						34	
DP-8a	RT	21+75	21+33.75					42		
DP-8b	RT/LT	21+75	21+75				32			
SW-6	LT	20+11	20+41							150
SW-7	LT	21+61.36	21+16.86							20
SW-8	RT	21+22.10	21+28.64							35
SW-9	RT	21+68.15	21+71.45							24
SHEET	SHEET	18+00	22+00	150	1563	87	144	42	327	229
TOTALS CARRIED TO GENERAL SUMMARY				150	1563	87	144	42	327	229

REF. No.	SIDE	STATION FROM	STATION TO	604 SANITARY MANHOLE MASS1048-AGS-R	604 CATCH BASIN MASS7030	604 DRAINAGE MANHOLE MASS1045	604 DRAINAGE MANHOLE MASS1048-R	608 CURB RAMP
				EACH	EACH	EACH	EACH	EACH
CB-3	LT	18+45	18+45		1			
CB-4	RT	18+45	18+95		1			
CB-4a	LT	18+95	19+05		1			
CB-5	RT	19+05	19+86.50		1			
CB-6	LT	19+86.50	21+00		1			
CB-7	RT	21+00	21+75		1			
CB-8	RT	21+75	21+75		1			
CB-8A	LT	21+75	18+61.04					1
CR-5	LT	18+61.04	18+81.30					1
CR-6	LT	18+81.30	21+26.08					1
CR-7	LT	21+26.08	21+60.12					1
CR-8	LT	21+60.12	21+25.44					1
CR-9	RT	21+25.44	21+62.87					1
CR-10	RT	21+62.87	18+65.76				1	
DA-2	RT	18+65.76	21+33.75			1		
DA-3	RT	21+33.75	21+71.25	1				
SA-4	LT	21+71.25	21+41.59	1				
SA-5	R/LT	21+41.59	21+50.33	1				
SA-6	LT	21+50.33						
TOTALS CARRIED TO GENERAL SUMMARY				3	9	1	1	6

VERTICAL IN FEET 5 2.5 0

0 10 20 HORIZONTAL SCALE IN FEET

CHECKED BY: KAD
DATE: MAY, 2012
DRAWN BY: FPW
DATE: MAY, 2012

REVISIONS:

DATE	DESCRIPTION

1st St NE Improvement Project
Plan and Profile Sta 18+00 to Sta 22+00
City of Massillon
Stark County, Ohio

Kathy Catazaro-Perry, Mayor
Massillon City of Champions

DRAWING NAME: 1StNEPP3.DWG
CITY NUMBER: 10ST03

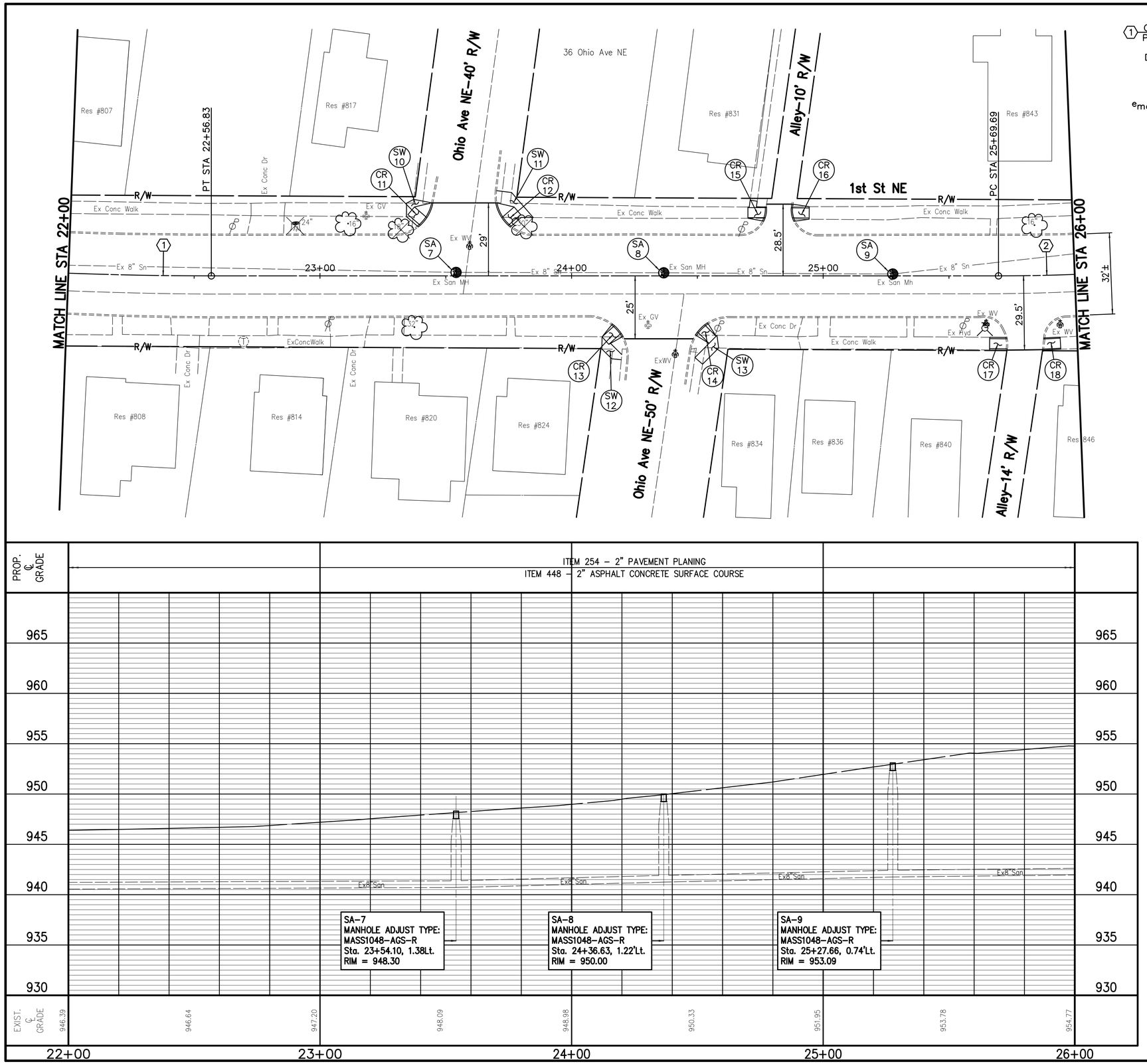

1 CURVE DATA
P.I. = STA. 21+56.19
Δ = 07°42'01" LT.
Dc = 3°49'11"
R = 1500.00'
T = 100.95'
L = 201.59'
E = 3.39'
e_{max} = none

2 CURVE DATA
P.I. = STA. 26+58.61
Δ = 13°05'22" LT.
Dc = 7°23'35"
R = 775'
T = 88.91'
L = 177.05'
E = 5.08'
e_{max} = none

REF. No.	SIDE	STATION FROM	STATION TO	203 ROADWAY EXCAVATION	254 2" PAVEMENT PLANING	448 2" ASPHALT CONCRETE SURFACE COURSE	604 SANITARY MANHOLE MASS1048-AGS-R	608 CURB RAMP	608 CONCRETE WALK
				SY	SY	CY	EACH	EACH	SF
CR-11	LT	21+41.28	XX					1	
CR-12	LT	21+73.46	XX					1	
CR-13	RT	24+18.47	XX					1	
CR-14	RT	24+51.38	XX					1	
CR-15	LT	24+77.43	XX					1	
CR-16	LT	24+87.33	XX					1	
CR-17	RT	25+73.24	XX					1	
CR-18	RT	25+86.81	XX					1	
SW-10	XX	XX	XX						48
SW-11	XX	XX	XX						85
SW-12	XX	XX	XX						35
SW-13	XX	XX	XX						44
SA-7	LT	23+54.10	XX				1		
SA-8	LT	24+36.63	XX				1		
SA-9	LT	25+27.66	XX				1		
SHEET	SHEET		SHEET	30	1552	87		8	212
TOTALS CARRIED TO GENERAL SUMMARY				30	1552	87	3	8	212

REVISIONS:

DATE	DESCRIPTION

CHECKED BY: KAD
DATE: MAY, 2012
DRAWN BY: FPW
DATE: MAY, 2012

VERTICAL IN FEET 5 2.5 0
HORIZONTAL SCALE IN FEET 0 10 20

1st St NE Improvement Project
Plan and Profile Sta 22+00 to Sta 26+00
City of Massillon
Stark County, Ohio

Kathy Catazaro-Perry, Mayor
Massillon City of Champions

DRAWING NAME: 1StNEPP4.DWG
CITY NUMBER: 10st03

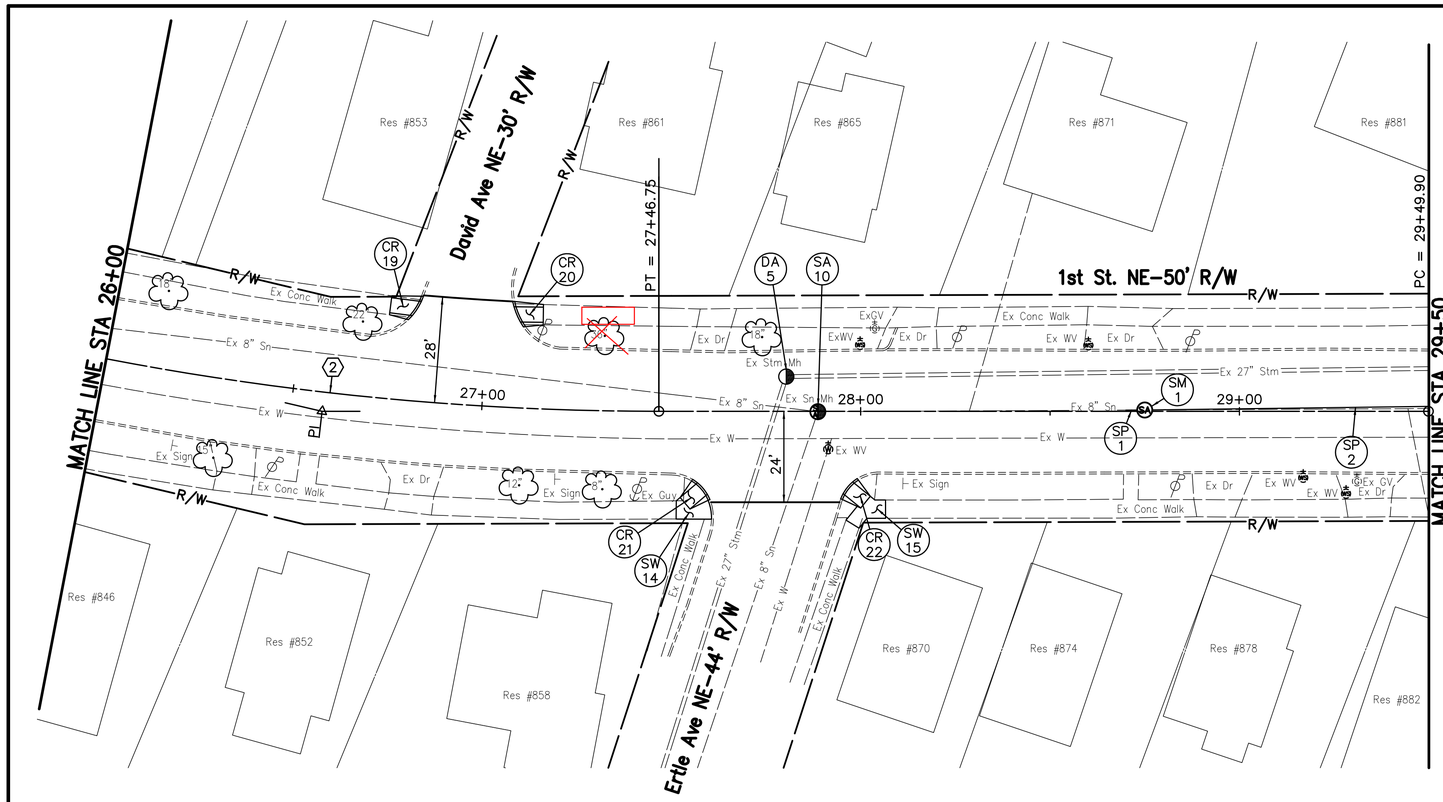

② CURVE DATA
P.I. = STA. 26+58.61
Δ = 13°05'22" LT.
Dc = 17°41'59"
R = 775.00'
T = 88.91'
L = 177.05'
E = 5.08'
e_{max} = none

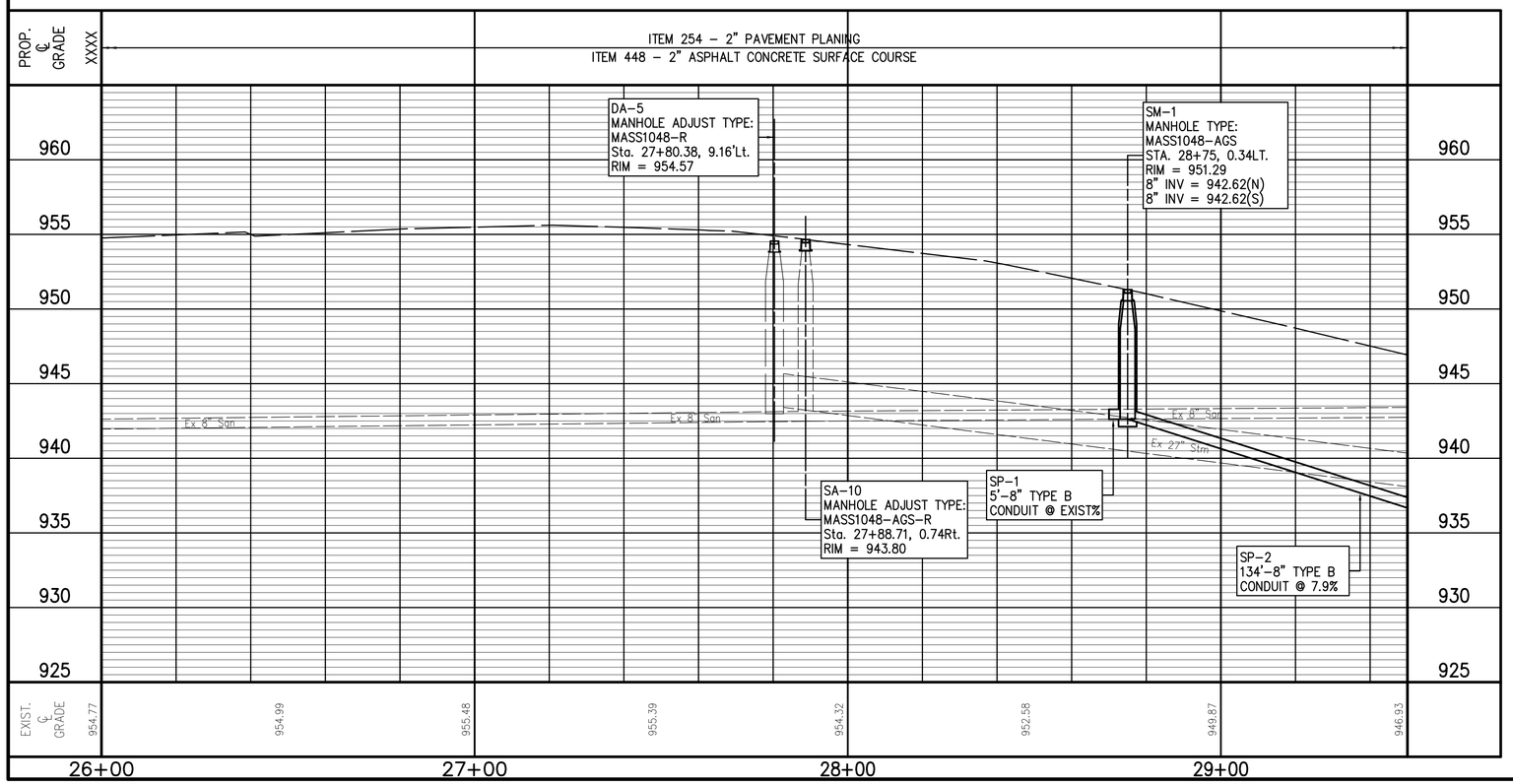

REF. No.	SIDE	STATION FROM	STATION TO	203 ROADWAY EXCAVATION CY	254 2" PAVEMENT PLANING SY	448 2" ASPHALT CONCRETE SURFACE COURSE CY	603 SANITARY 8" TYPE B CONDUIT LF	604 DRAINAGE MANHOLE MASS1048-R EACH	604 SANITARY MANHOLE MASS1048-AGS-R EACH	604 SANITARY MANHOLE MASS1048-AGS EACH	608 CURB RAMP EACH	608 CONCRETE WALK CY
CR-19	LT	26+80.80									1	
CR-20	LT	27+07.97									1	
CR-21	RT	27+58.35									1	
CR-22	RT	27+96.50									1	
DA-5	LT	27+80.38						1				
SA-10	LT	27+88.71							1			
SW-14	RT	27+51.30	27+60.65									38
SW-15	RT	27+96.13	28+06.58									46
SP-1	LT	27+88.71	27+83.71				5					
SP-2	LT	27+88.71	30+08.50				134					
SM-1	LT	28+75								1		
SHEET	RT/LT	SHEET		2	1326	74		1	1	1	4	84
TOTALS CARRIED TO GENERAL SUMMARY				2	1326	74	139	1	1	1	4	84

REVISIONS:

DATE	DESCRIPTION

VERTICAL IN FEET 5 2.5 0

0 10 20 HORIZONTAL SCALE IN FEET

CHECKED BY: KAD
DATE: MAY, 2012
DRAWN BY: FPW
DATE: MAY, 2012

1st St NE Improvement Project
Plan and Profile Sta 26+00 to Sta 29+50

City of Massillon
Stark County, Ohio

Kathy Catazaro-Perry, Mayor
Massillon City of Champions

DRAWING NAME: xxxx.DWG
CITY NUMBER: xxxx.DWG

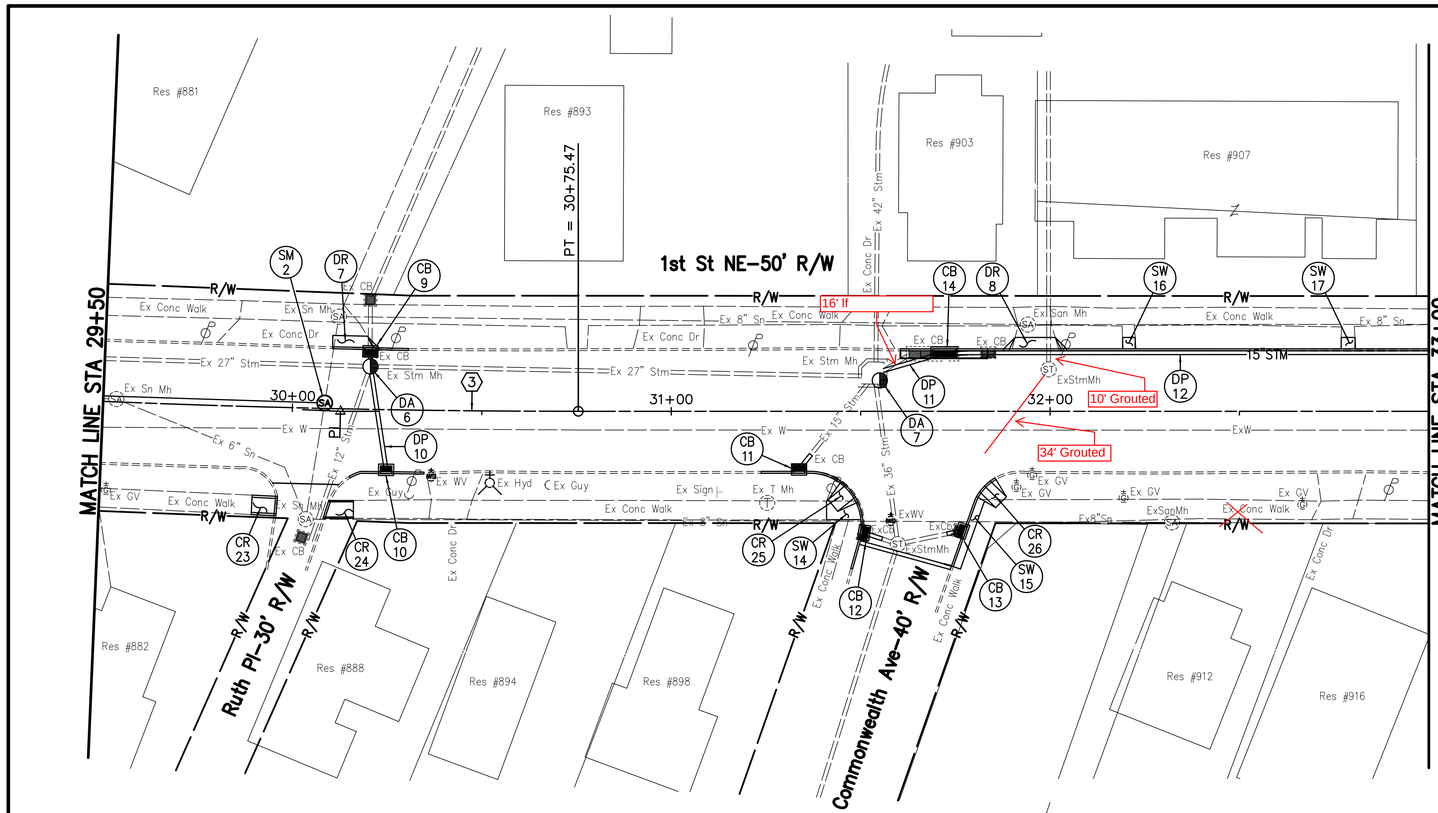

③ CREEK CURVE DATA
P.I. = STA. 30+12.69
Δ = 02°23'54" LT.
Dc = 00°31'25"
R = 3000.00'
T = 62.79'
L = 125.57'
E = 0.66'
e_{max} = none

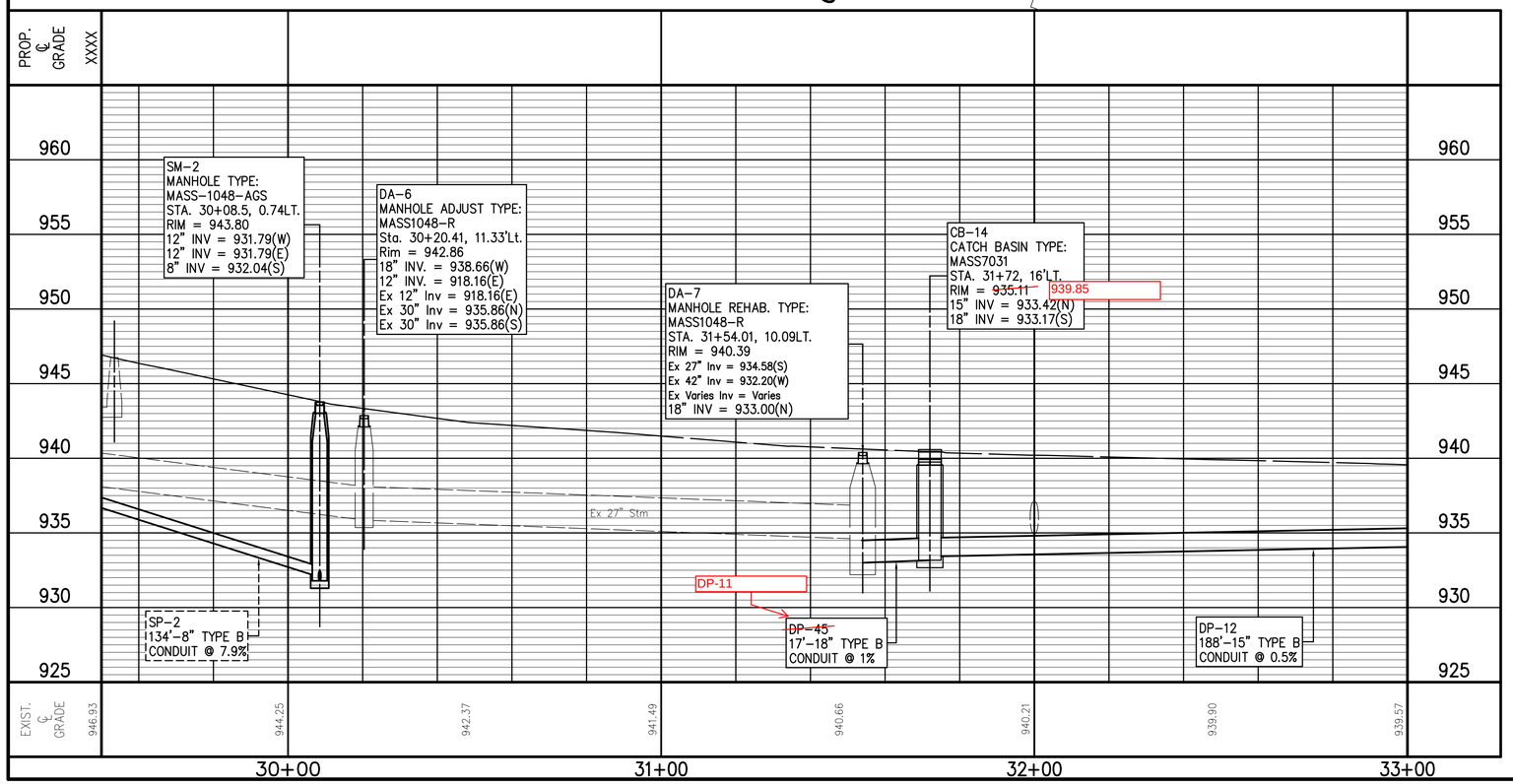

REF. No.	SIDE	STATION FROM	STATION TO	203 ROADWAY EXCAVATION CY	254 2" PAVEMENT PLANING SY	448 2" ASPHALT CONCRETE SURFACE COURSE CY	603 DRAINAGE 12" TYPE B CONDUIT LF	603 DRAINAGE 15" TYPE B CONDUIT LF	603 DRAINAGE 18" TYPE B CONDUIT LF	603 SANITARY 12" TYPE B CONDUIT LF	604 CATCH BASIN MASS7030 EACH	604 CATCH BASIN MASS7031 EACH	604 DRAINAGE MANHOLE MASS1048–R EACH	604 SANITARY MANHOLE MASS1048–AGS EACH	608 CURB RAMP EACH	608 CONCRETE WALK SF
CB–9	LT	30+20.32							5		1					
CB–10	RT	30+25									1					
CB–11	RT	31+33.75						5			1					
CB–12	RT	31+50.78					5				1					
CB–13	RT	31+77.44					5				1					
CB–14	LT	31+72.00										1				
CR–23	RT	29+96.93													1	
CR–24	RT	30+09.50													1	
CR–25	RT	31+47.45													1	
CR–26	RT	31+82.70													1	
DA–6	LT	30+20.41														
DA–7	LT	31+54.01														
DP–10	RT/LT	30+25	30+20.32				28						1			
DP–11	LT	31+72.00	31+54.01						17'				1			
DP–12	LT	33+52	31+72.00					188								
SW–14	RT	31+41	31+50.06											1		35
SW–15	RT	31+76.34	31+82.77													48
SW–16	LT	32+19	32+22													12
SW–17	LT	32+77	31+81													12
WW–2	LT	30+08.50								10						
ALL	SHEET	SHEET		82	1326	73										
TOTALS CARRIED TO GENERAL SUMMARY				82	1326	73	38	193	17	10	5	1	2	1	4	107

REVISIONS:

DATE	DESCRIPTION

CHECKED BY: KAD
DATE: MAY, 2012
DRAWN BY: FPW
DATE: MAY, 2012

VERTICAL IN FEET 5 2.5 0
HORIZONTAL SCALE IN FEET 0 10 20

1st St NE Improvement Project
Plan and Profile Sta 29+50 to Sta 33+00
City of Massillon
Stark County, Ohio

Kathy Catazaro-Perry, Mayor
Massillon City of Champions

DRAWING NAME: 1StNEPP6.DWG
CITY NUMBER: 10st03.DWG

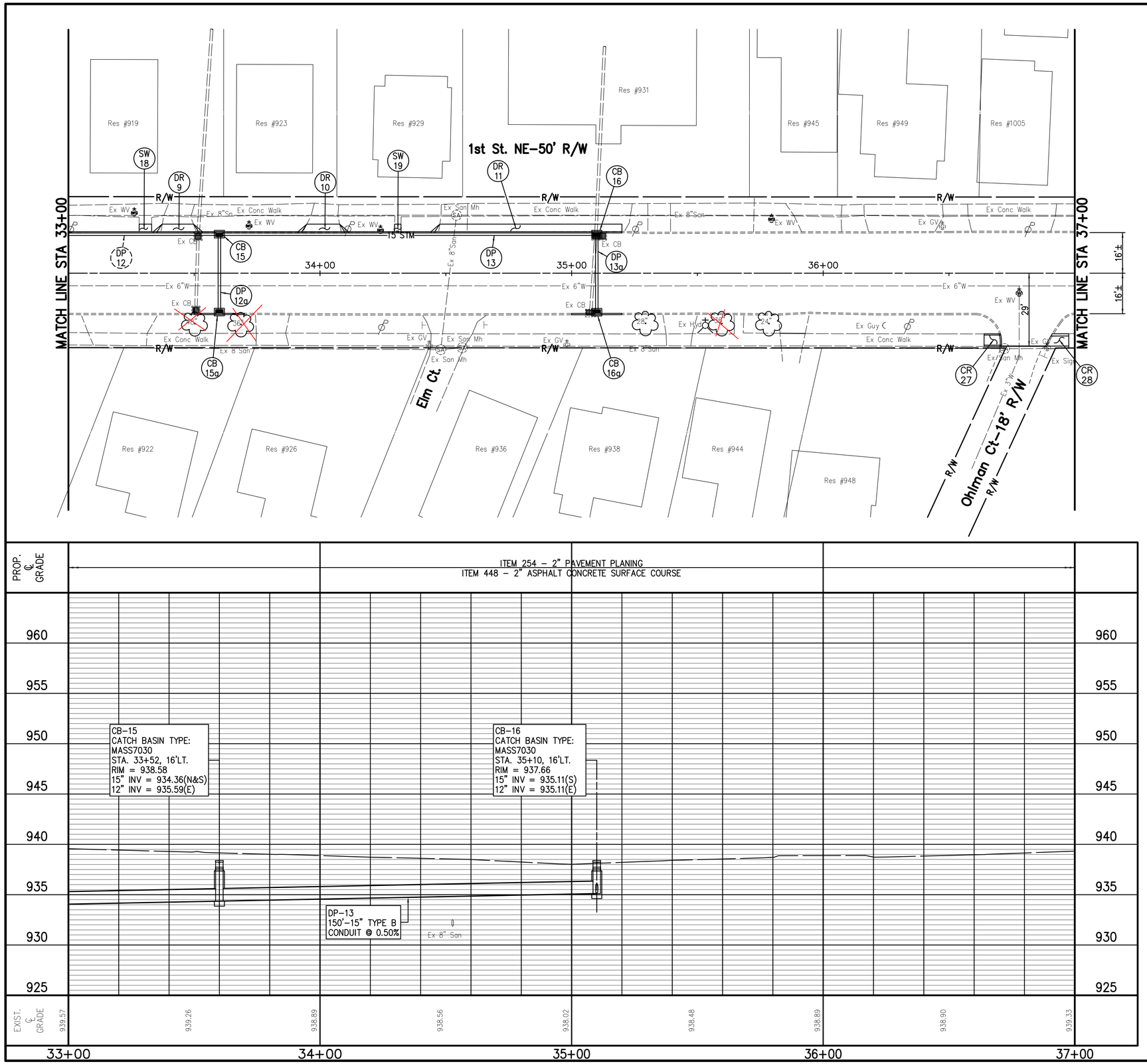

REF. No.	SIDE	STATION FROM	STATION TO	203 ROADWAY EXCAVATION CY	254 2" PAVEMENT PLANING SY	448 2" ASPHALT CONCRETE SURFACE COURSE CY	603 DRAINAGE 12" TYPE B CONDUIT LF	603 DRAINAGE 15" TYPE B CONDUIT LF	604 CATCH BASIN MASS7030 EACH	608 CURB RAMP EACH	608 CONCRETE WALK SF
CB–15	RT		33+52						1		
CB–15a	LT		33+52						1		
CB–16	RT		35+10						1		
CB–16a	LT		35+10						1		
CR–27	RT		36+71							1	
CR–28	RT		36+89							1	
DP–12a	RT/LT	33+52	33+52				32				
DP–13	LT	35+10	33+52					150			
DP–13a	RT/LT	35+10	35+10				32				
SW–18	LT	33+28	33+33								
SW–19	LT	34+30	34+33								
ALL	SHEET		SHEET	85	1457	80					
TOTALS CARRIED TO GENERAL SUMMARY				85	1457	80	64	150	4	2	24

REVISIONS: DATE	DESCRIPTION

VERTICAL IN FEET 5 2.5 0

HORIZONTAL SCALE IN FEET 0 10 20

CHECKED BY: KAD
DATE: MAY, 2012
DRAWN BY: FPW
DATE: MAY, 2012

1st St NE Improvement Project
Plan and Profile Sta 33+00 to Sta. 37+00

City of Massillon
Stark County, Ohio

Kathy Catazaro-Perry, Mayor
Massillon
City of Champions

DRAWING NAME: 1StNEPP7.DWG
CITY NUMBER: 10st03.DWG

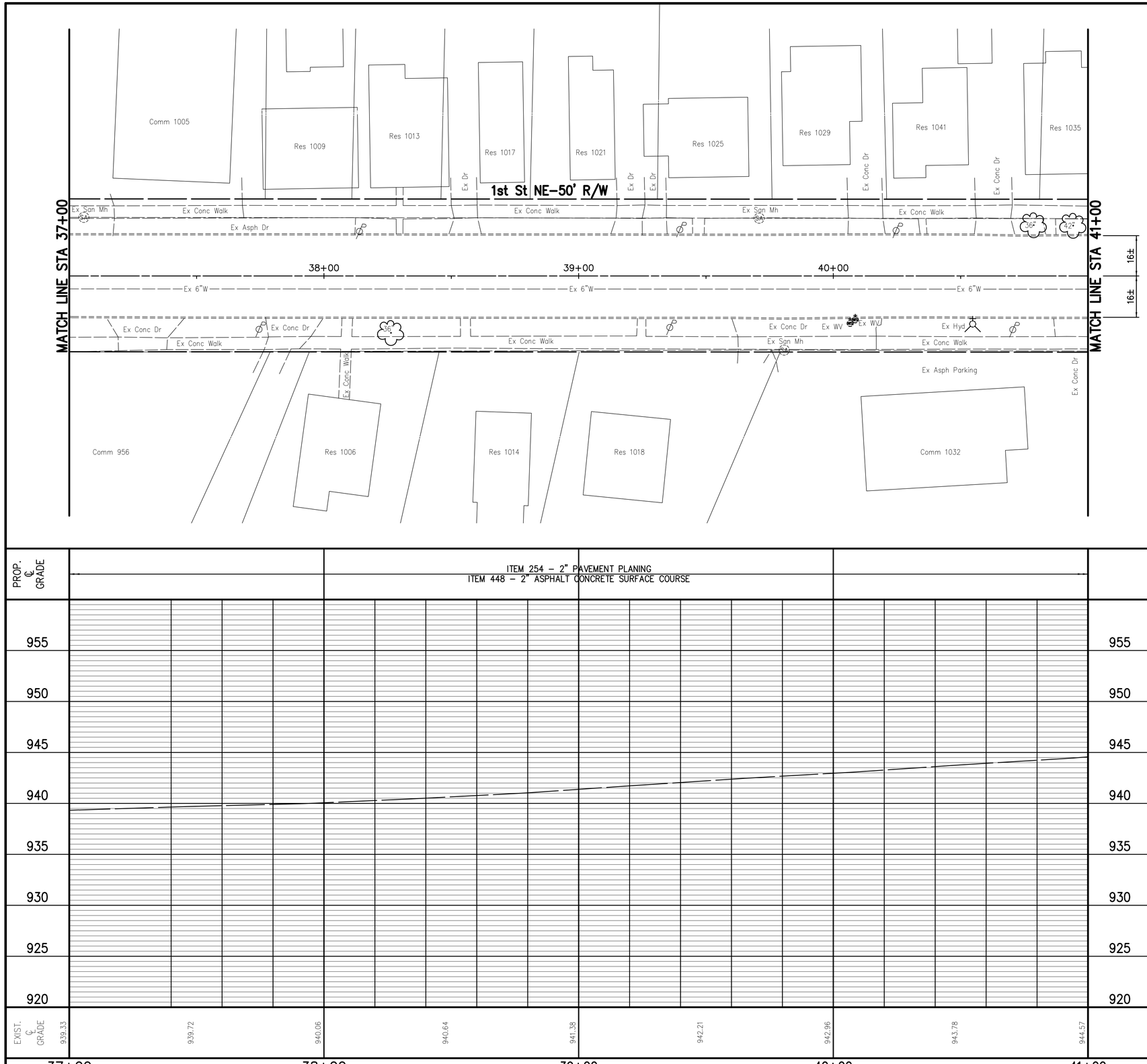

REF. No.	SIDE	STATION FROM	STATION TO	254 2" PAVEMENT PLANING SY	448 2" ASPHALT CONCRETE SURFACE COURSE CY
ALL	SHEET	SHEET		1430	80
TOTALS CARRIED TO GENERAL SUMMARY				1430	80

VERTICAL IN FEET 5 2.5 0

0 10 20 HORIZONTAL SCALE IN FEET

CHECKED BY: KAD
DATE: MAY, 2012
DRAWN BY: FPW
DATE: MAY, 2012

REVISIONS:

DATE	DESCRIPTION

1st St NE Improvement Project
Plan and Profile Sta 37+00 to Sta 41+00
City of Massillon
Stark County, Ohio

Kathy Catazaro-Perry, Mayor
Massillon
City of Champions

DRAWING NAME: 1StNEPP8.DWG
CITY NUMBER: 10st03

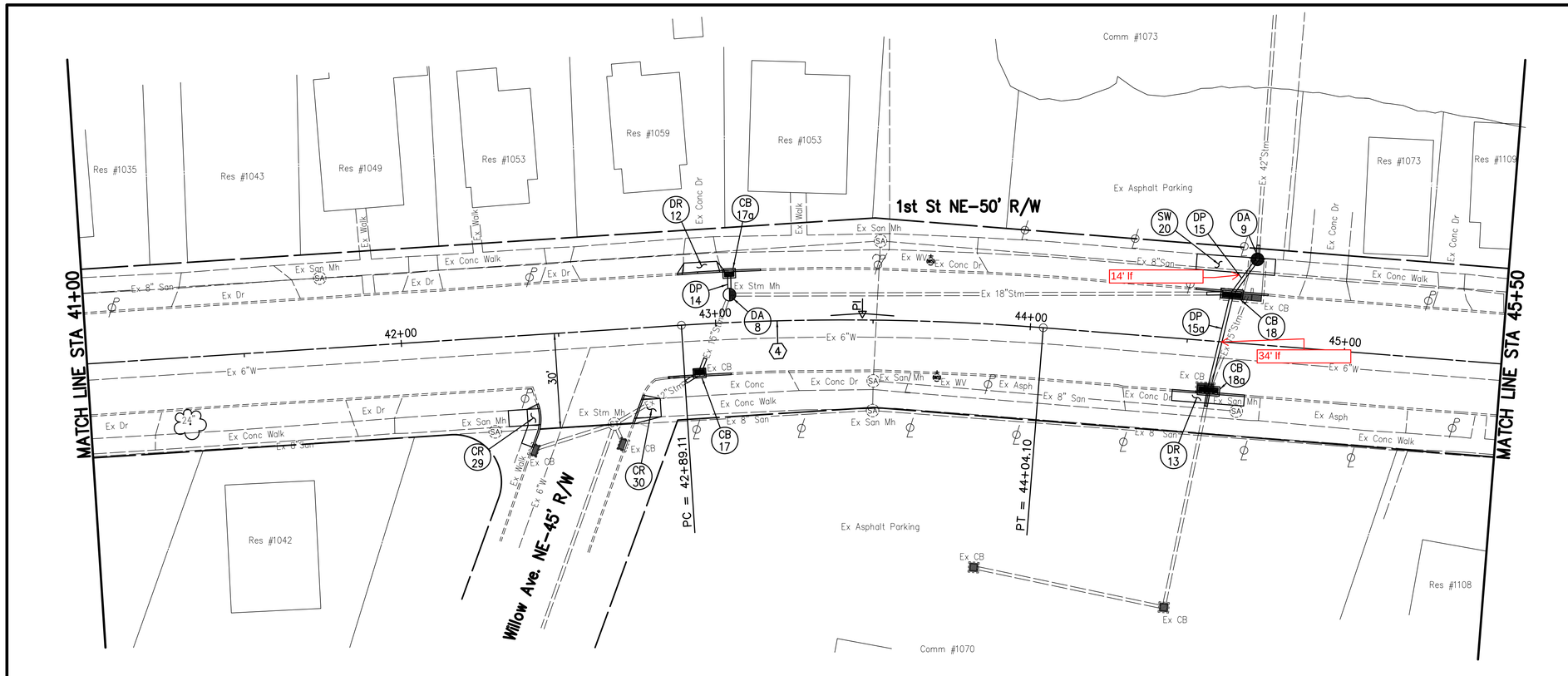

4 CREEK CURVE DATA
P.I. = STA. 43+46.71
Δ = 08°14'08" RT.
Dc = 07°09'43"
R = 800.00'
T = 57.59'
L = 114.99'
E = 2.07'
e_{max} = none

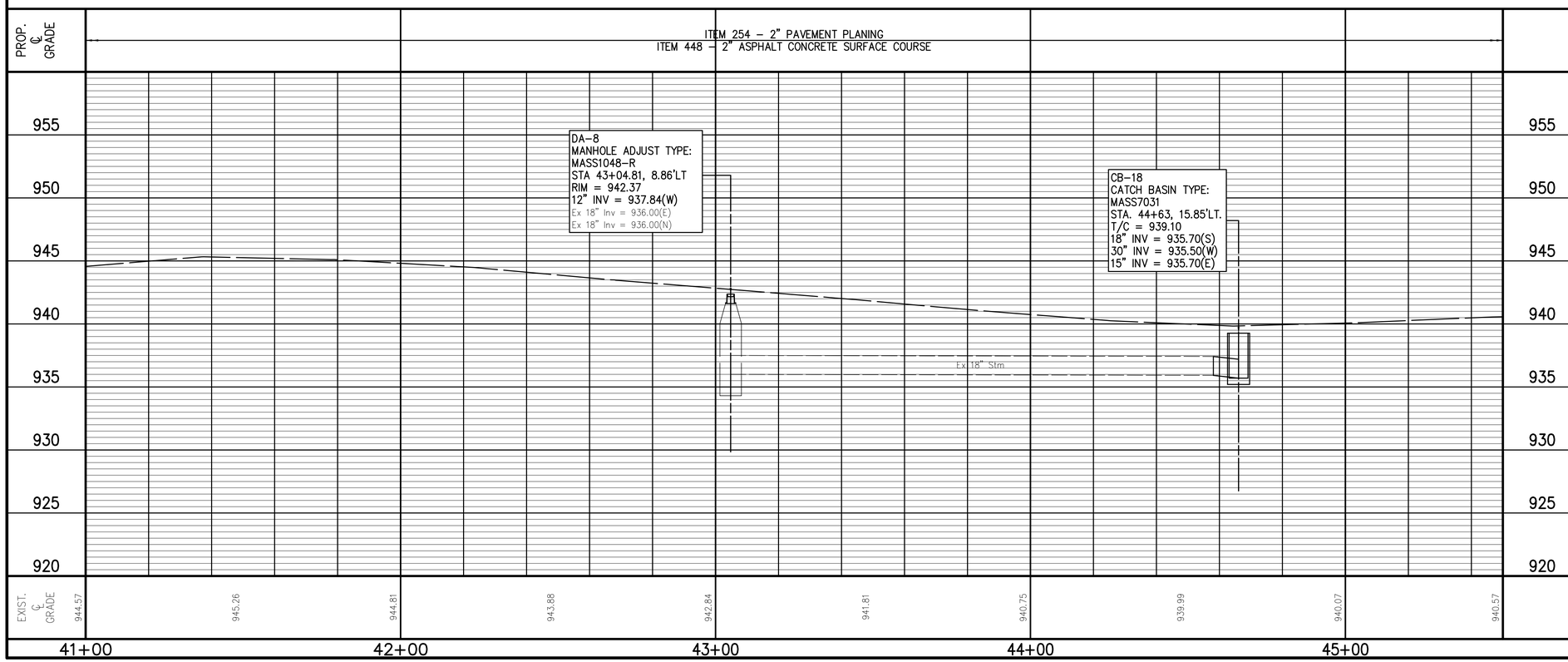

REF. No.	SIDE	STATION FROM	STATION TO	203 ROADWAY EXCAVATION CY	254 2" PAVEMNT PLANING SY	448 2" ASPHALT CONCRETE SURFACE COURSE CY	603 DRAINAGE 10" TYPE B CONDUIT LF	603 DRAINAGE 12" TYPE B CONDUIT LF	603 DRAINAGE 15" TYPE B CONDUIT LF	603 DRAINAGE 18" TYPE B CONDUIT LF	603 DRAINAGE 30" TYPE B CONDUIT LF	603 DRAINAGE 42" TYPE B CONDUIT LF	604 CATCH BASIN MASS7030 EACH	604 CATCH BASIN MASS7031 EACH	604 DRAINAGE MANHOLE MASS1048-R EACH	604 DRAINAGE MANHOLE MASS1046 EACH	608 CURB RAMP EACH	608 CONCRETE WALK SF
CB-17	RT	42+95											1					
CB-17a	LT	43+05											1					
CB-18	LT	44+63												1				
CB-18a	RT	44+58					5							1				
CR-29	RT	42+42.74																
CR-30	RT	42+73.58																
DA-8	LT	43+04.81															1	54
DA-9	LT	44+69.14															1	
DP-14	LT	43+05	43+04.81					7								1		
DP-15	LT	44+63	44+69.14								14							
DP-15a	RT/LT	44+58	44+63						32							1		
SW-20	LT	44+51	44+76															125
TOTALS CARRIED TO GENERAL SUMMARY	ALL	SHEET	SHEET	38	1656	92	5	12	37	5	14	5	2	2	1	2	179	

VERTICAL IN FEET 0 2.5 5

0 10 20 HORIZONTAL SCALE IN FEET

CHECKED BY: KAD
DATE: MAY, 2012
DRAWN BY: FPW
DATE: MAY, 2012

REVISIONS:

DATE	DESCRIPTION

1st St NE Improvement Project
Plan and Profile Sta 41+00 to 45+50
City of Massillon
Stark County, Ohio

Kathy Catazaro-Perry, Mayor
Massillon
City of Champions

DRAWING NAME: 1StNEPP9.DWG
CITY NUMBER: 10st03

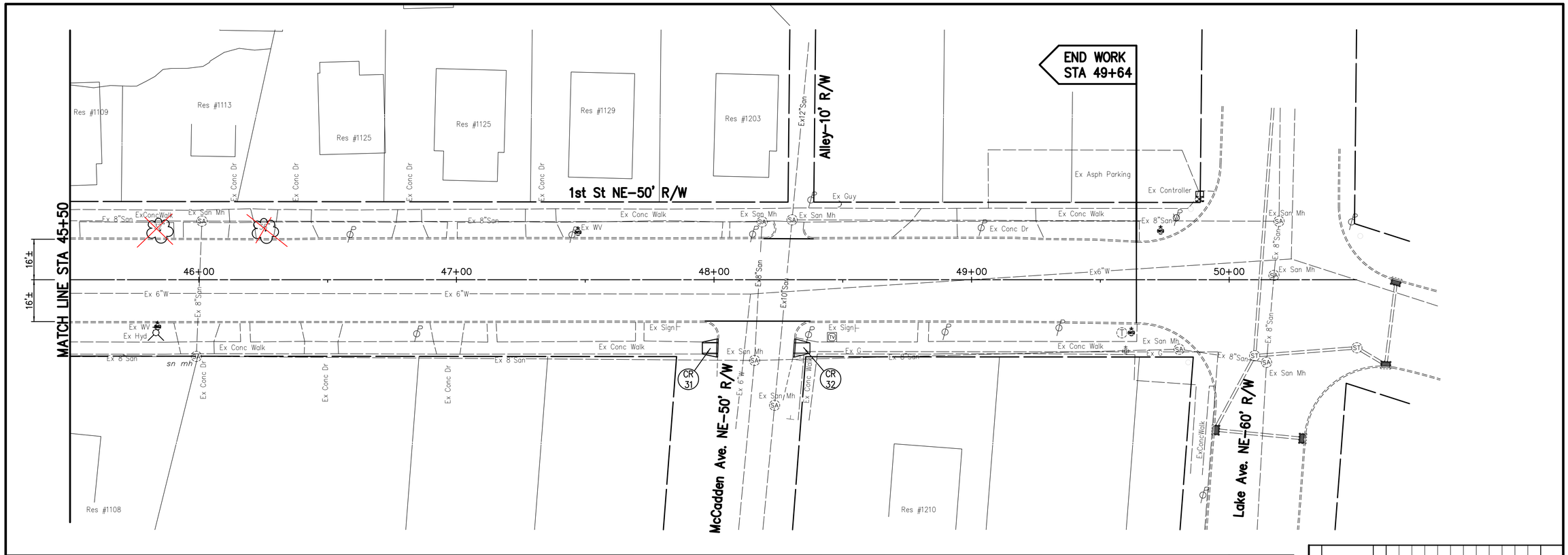

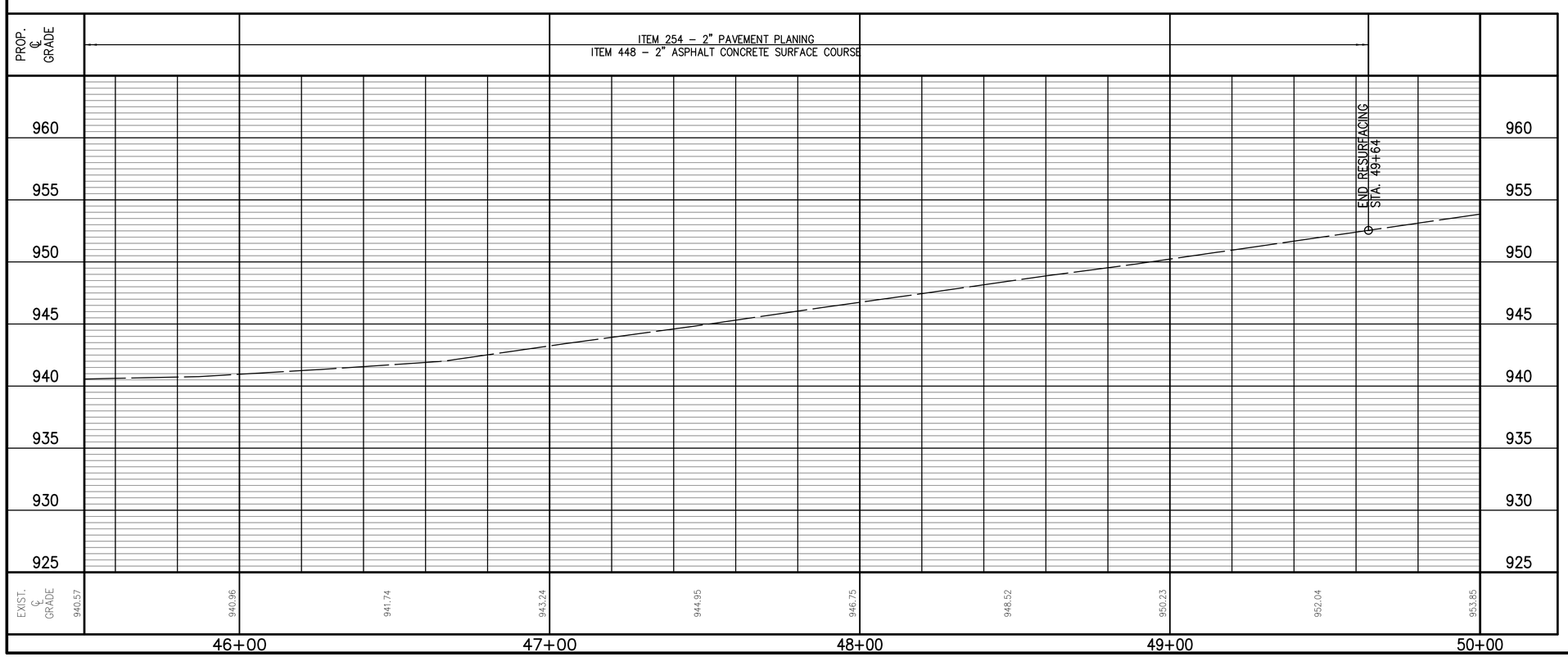

REF. No.	SIDE	STATION FROM	STATION TO	203 ROADWAY EXCAVATION CY	254 2" PAVEMENT PLANING SY	448 2" ASPHALT CONCRETE SURFACE COURSE CY	608 CURB RMP EACH
CR-31	RT	48+01.5					1
CR-32	RT	48+31					1
ALL	SHEET	SHEET		3	1468	82	
TOTALS CARRIED TO GENERAL SUMMARY				3	1468	82	2

VERTICAL IN FEET 5 2.5 0

0 10 20
HORIZONTAL SCALE IN FEET

CHECKED BY: KAD
DATE: MAY, 2012
DRAWN BY: FPW
DATE: MAY, 2012

REVISIONS:
DATE | DESCRIPTION

1st St NE Improvement Project
Plan and Profile Sta 45+50 to Sta 50+00
City of Massillon
Stark County, Ohio

Kathy Catazaro-Perry, Mayor
Massillon
City of Champions

DRAWING NAME: 1StNEPP10.DWG
CITY NUMBER: 10st03

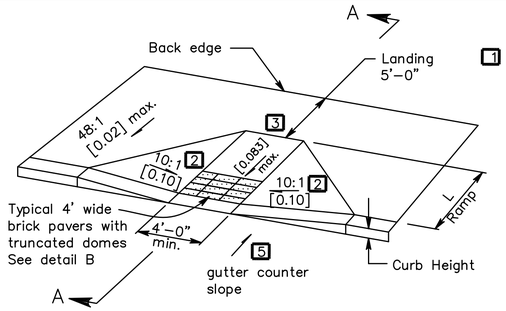

CURB RAMP TYPE A

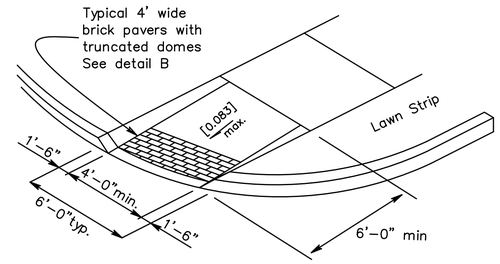

CURB RAMP TYPE B

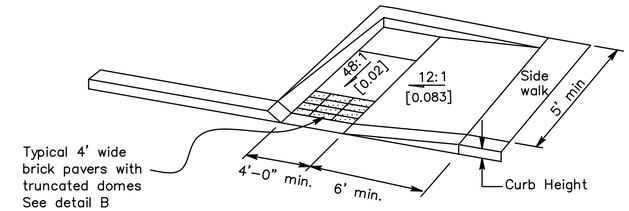

CURB RAMP TYPE D

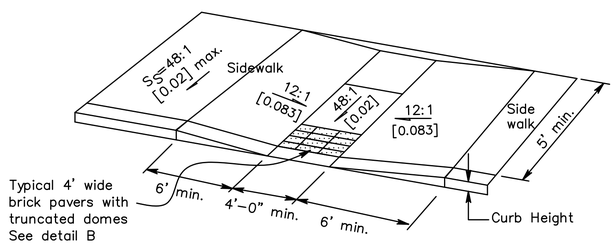

CURB RAMP TYPE C

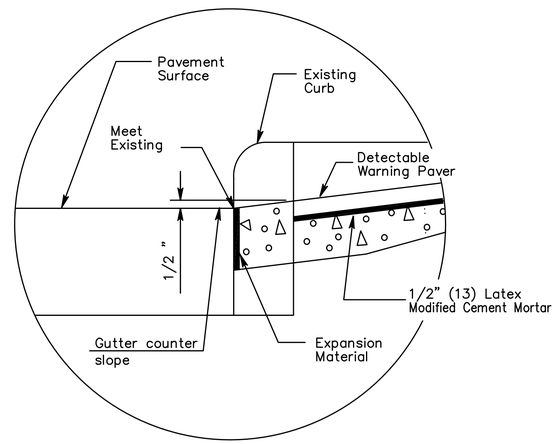

DETAIL A

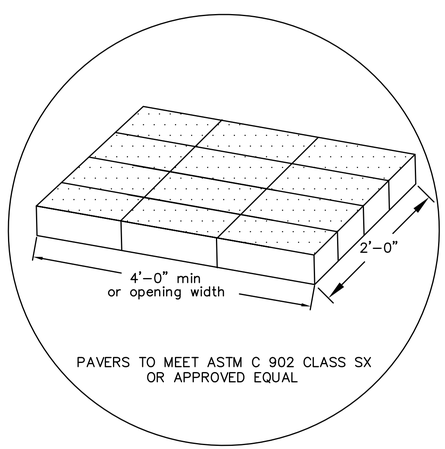

DETAIL B

LEGEND

1. THE ENGINEER MAY PERMIT NO LESS THAN 3'–0" IN EXISTING SIDEWALKS IF THE LANDING IS UNCONSTRAINED ALONG THE BACK EDGE.

2. WHERE LANDING WIDTH HAS BEED REDUCED TO 3'–0" THE FLARED SIDES SHALL HAVE A MAXIMUM SLOPE OF 12:1 [0.0831]

3. THE MAX. SLOPE OF THE RAMP TOWARD THE CURB 12 12:1 [0.083] AS RELATED TO THE HORIZONTAL, BUT THE, RELATIVE TO THE EXISTING OR PROPOSED WALK SLOPE.

   THE ENGINEER MAY ALLOW THE FOLLOWING IN HISTORICAL AREAS

   A) 10:1 [0.10] FOR A MAX. RISE OF 6"
   B) 8;1 [0.125] FOR A MAX. RISE OF 3"
   C) 6:1 [0.167] OVER A MAX RUN OF 2'–0" FOR HISTORIC AREAS WHERE A FLATTER SLOPE IS NOT FEASIBLE.

4. THE MINIMUM LENGHT OF A TYPE A OR B RAMP IS 6' FROM THE BACK OF A 6" CURB AND MAY BE INCREASED WHERE FEASIBLE TO OBTAIN A FLATTER RAMP SLOPE OR TO BETTER BLEND WITH THE WALK CONFIGURATION.

5. GUTTER COUNTER SLOPES AT THE FOOT OF PERPENDICULAR CUR RAMPS SHOULD NOT EXCEED 20:1 [0.05] OVER A DISTANCE OF 2'–0" FROM THE CURB.

NOTES

SURFACE TEXTURE: Texture of concrete surfaces shall be obtained by coarse brooming transverse to the ramp slopes and shall be rougher than the adjacent walk

TRUNCATED DOMES: Install detectable warnings (truncated domes) for a distance of 24" from the back of curb for the entire width of the ramp opening.

Pavers will meet ASTM C 902 Class SX, Type 1, or C 936, or C 1272 Type R.

ACCEPTABLE MANUFACTURERS AND PRODUCTS ARE AS FOLLOWS:

1.) Whitacre–Greer Fireproofing Company
1400 South Mahoning Ave.
Alliance, OH 44601
1–800–WG PAVER
ADA Paver, 4"x8"x2–1/4" Clear Red, Rustic, #30

2.) Hanover Architectural Products
240 Bender Road
Hanover, PA 17331
(717) 637–0500
Detectable Warning Paver, 12"x12"x2" or 24"x24"x2", Red or Quarry Red

3.) Endicott Clay Products
P.O. Box 17
Fairbury, NE 68352
(402) 729–5804
Handicap Detectable Warning Paver, 4"x8"x2–1/4", Red Blend

Pavers will be laid on top of a 4" unreinforced concrete base. Setting bed and joints to be mortared in accordance with manufacturer's instruction, or with a maximum 1/2" thick bed of latex modified cement mortar. Mortar joints to a width not greater than 5/32" and not less that 1/16". Pavers shall not be directly touching each other unless they have spacing bars.

Mortared joints are to be flush with top surface and struck so as to give a smooth surface. Pavers shall be laid such that joints are level with adjoining joints so as to provide a smooth transition from brick to brick and brick to concrete surface.

The surface of any two adjacent units should not differ by more than 1/8" in height. Bricks shall be placed in a running bond pattern. Face of all brick shall be clean of cement and protected so as to avoid chipping during construction.

Tile Modular Pavers

ACCEPTABLE MANUFACTURERS AND PRODUCTS ARE AS FOLLOWS:

1.) Engineered Plastics Inc.
300 International Dr., Suite 100
Williamsville, NY 14221
1–800–679–4022
Detectable/Tactile Warning Surface Tile, 48"x24" Modular Paver Inline Dome Tactile Tile, Colonial Red
Detectable/Tactile Warning Surface Tile, 24"x24" Modular Paver Inline Dome Tactile Tile, Colonial Red

Installation of above said project shall be as per Manufactures Specifications. This shall include all materials necessary for proper installation.

EXPANSION JOINTS: shall be provided in the curb ramp as extensions of walk joints and consistent with item 608.03 requirements for a new concrete walk. A 1/2" Item 705.03 expansion joint filler shall be provided around the edge of ramps built in existing concrete walk. Lines shown on this drawing indicate the ramp edge and slope changes and are not necessarily joint lines.

RELIEF JOINTS: must be provide at all points of continuous slope changes in Curb Type A and Type C.

PAYMENT: Item 608, CURB RAMP, EACH, shall include the cost of furnishing and installing all materials (including truncated domes,) grading, forming and finishing of the curb and walk of the curb ramp and removal of any existing material to perform such work

NW NE SW SE

VERTICAL IN FEET 1 .5 0

0 .5 1
HORIZONTAL SCALE IN FEET

CHECKED BY: KAD
DATE: MAY, 2012
DRAWN BY: FPW
DATE: MAY, 2012

REVISIONS:

DATE	DESCRIPTION

1st St NE Improvement Project
Curb Ramp Details
City of Massillon
Stark County, Ohio

Kathy Catazaro-Perry, Mayor
Massillon
City of Champions

DRAWING NAME: 1STNEADADTL.DWG
CITY NUMBER: 10ss03

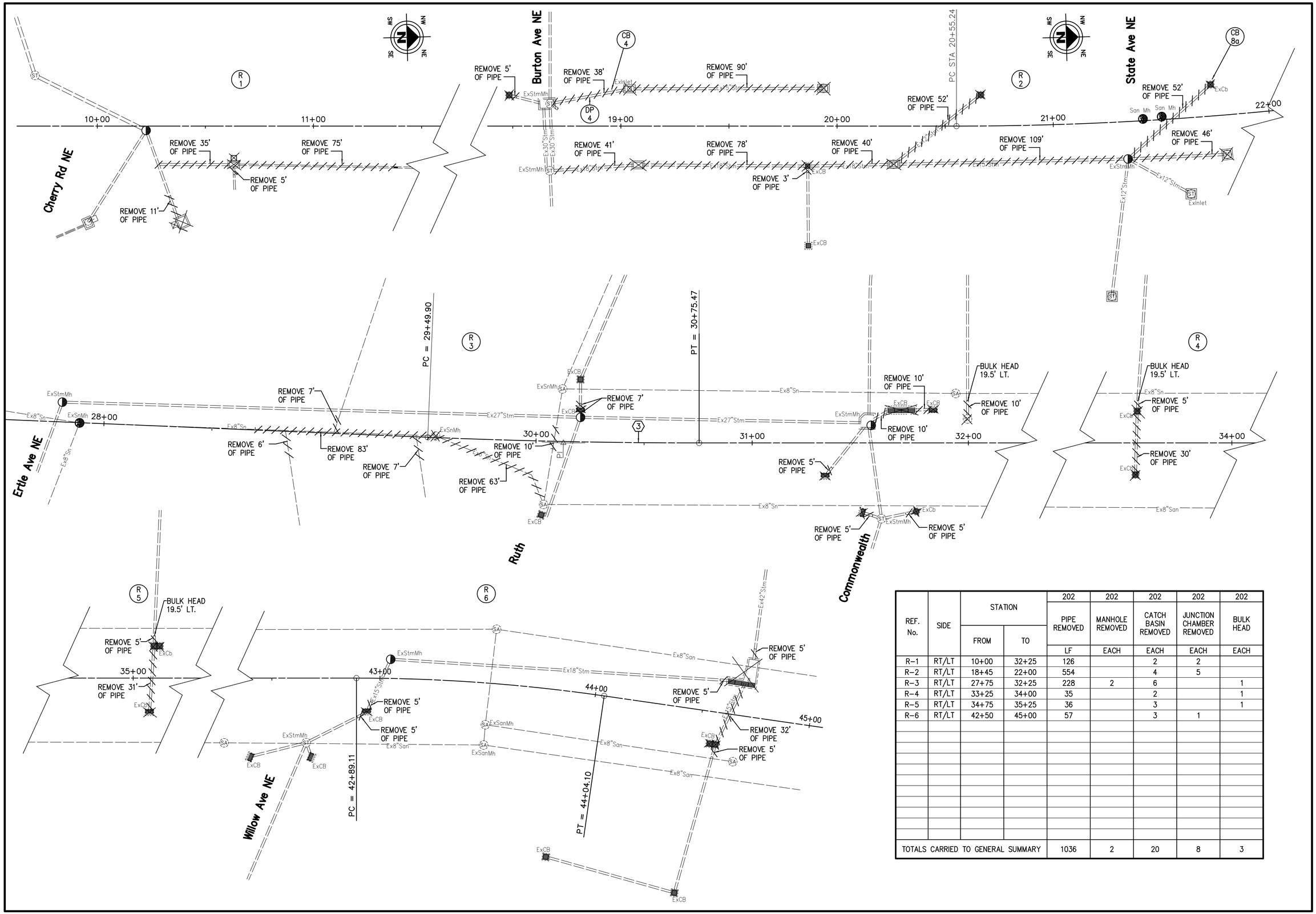

REF. No.	SIDE	STATION FROM	STATION TO	202 PIPE REMOVED	202 MANHOLE REMOVED	202 CATCH BASIN REMOVED	202 JUNCTION CHAMBER REMOVED	202 BULK HEAD
				LF	EACH	EACH	EACH	EACH
R-1	RT/LT	10+00	32+25	126		2	2	
R-2	RT/LT	18+45	22+00	554		4	5	
R-3	RT/LT	27+75	32+25	228	2	6		1
R-4	RT/LT	33+25	34+00	35		2		1
R-5	RT/LT	34+75	35+25	36		3		1
R-6	RT/LT	42+50	45+00	57		3	1	
TOTALS CARRIED TO GENERAL SUMMARY				1036	2	20	8	3

VERTICAL IN FEET 20 10 0

HORIZONTAL SCALE IN FEET 0 10 20

CHECKED BY: KAD
DATE: MAY, 2012
DRAWN BY: FPW
DATE: MAY, 2012

REVISIONS:

DATE	DESCRIPTION

1st St NE Improvement Project
Existing Drainage and Sanitary Removal Plan
City of Massillon
Stark County, Ohio

Kathy Catazaro-Perry, Mayor
Massillon
City of Champions

DRAWING NAME: 1StNEexdrgrem.DWG
CITY NUMBER: 10st03

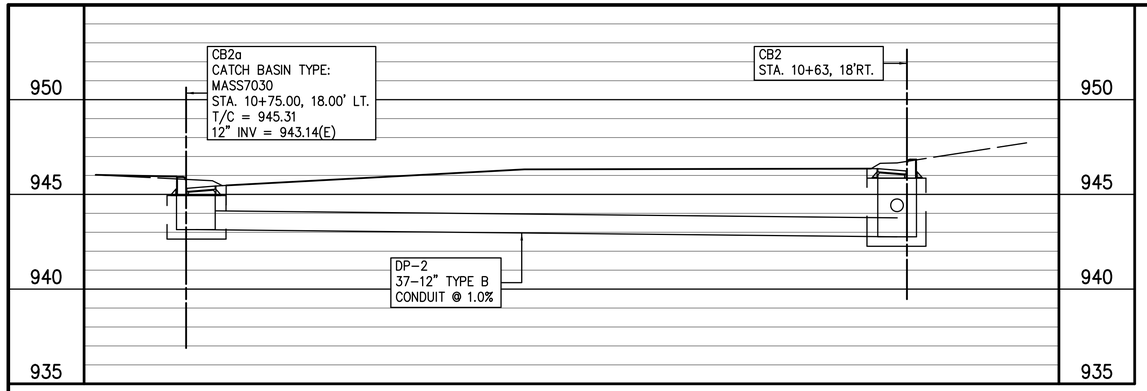

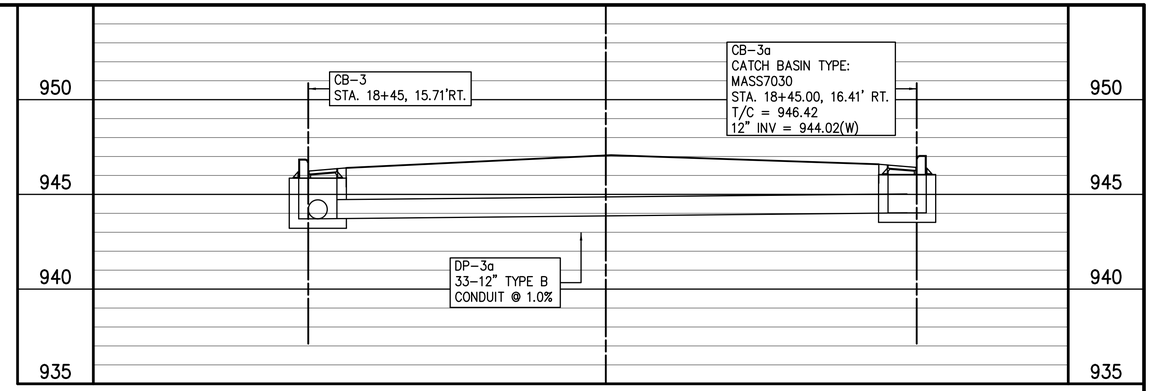

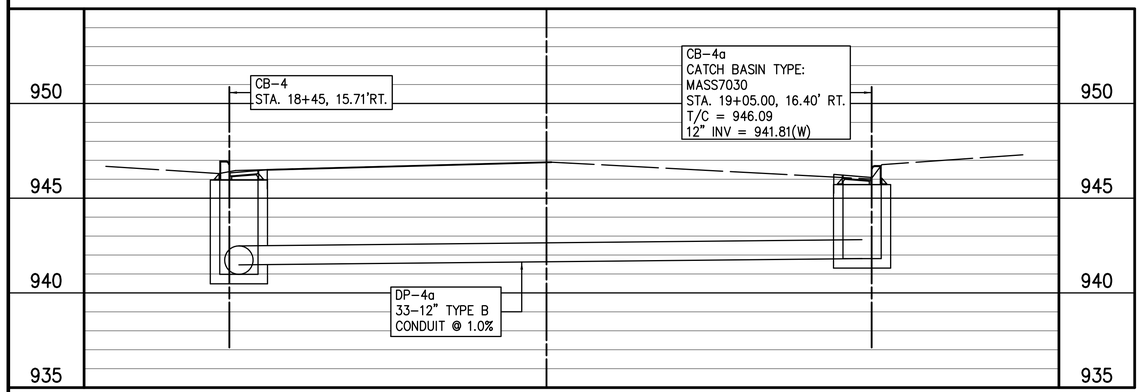

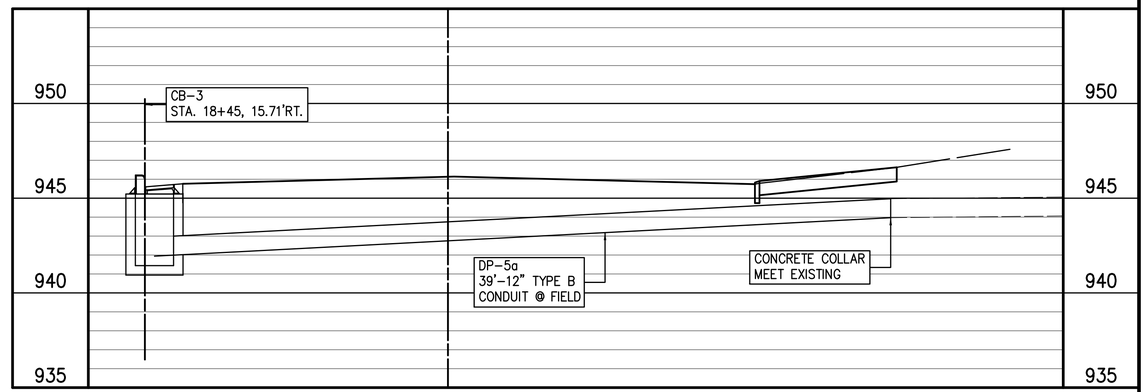

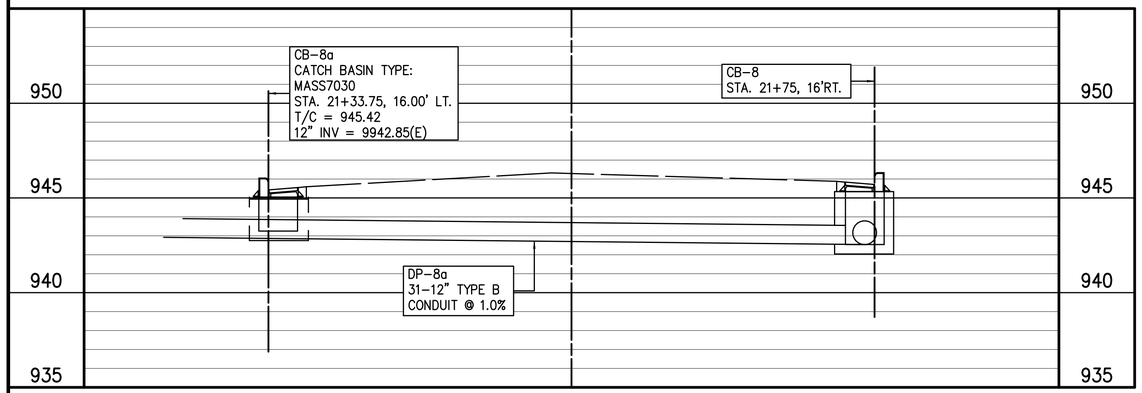

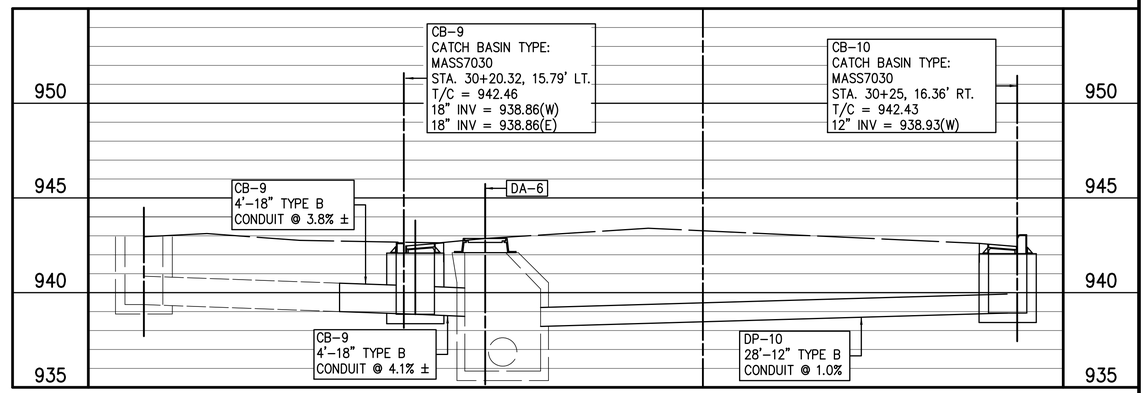

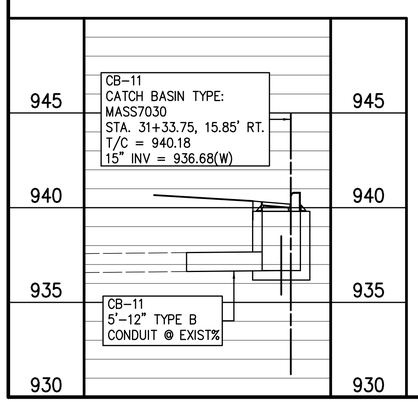

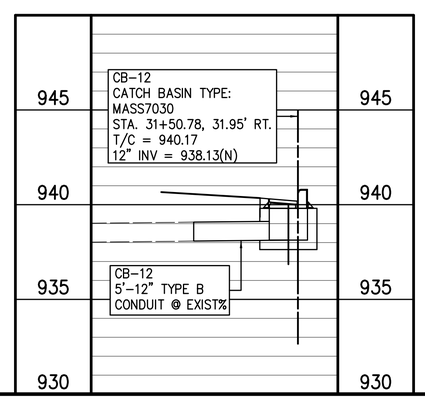

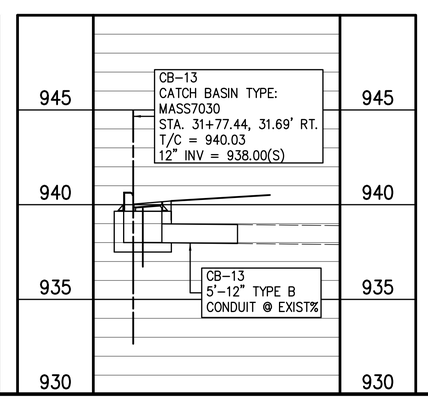

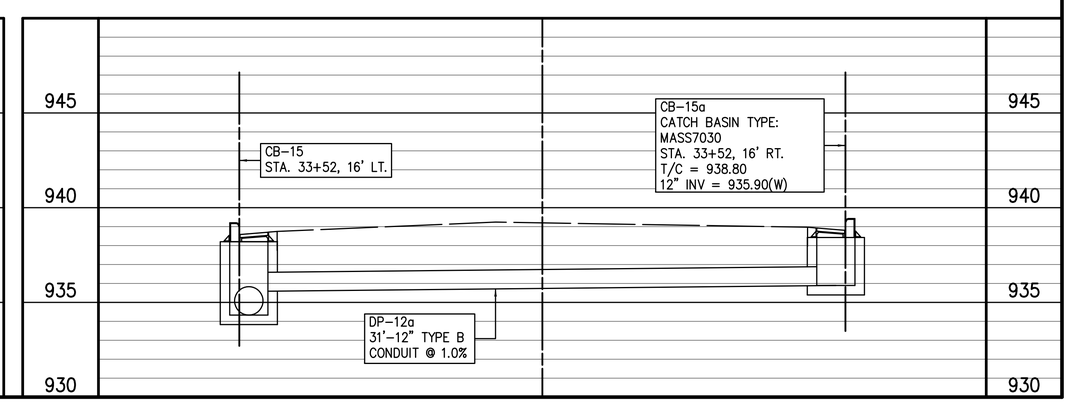

NW NE SW SE

VERTICAL IN FEET 0 2 4

HORIZONTAL SCALE IN FEET 0 2 4

CHECKED BY: KAD
DATE: MAY, 2012
DRAWN BY: FPW
DATE: MAY, 2012

REVISIONS:

DATE	DESCRIPTION

1st St NE Improvement Project

Drainage Profile

City of Massillon
Stark County, Ohio

Kathy Catazaro-Perry, Mayor
Massillon City of Champions

DRAWING NAME: 1StNEdrgprf1.DWG
CITY NUMBER: 10st03

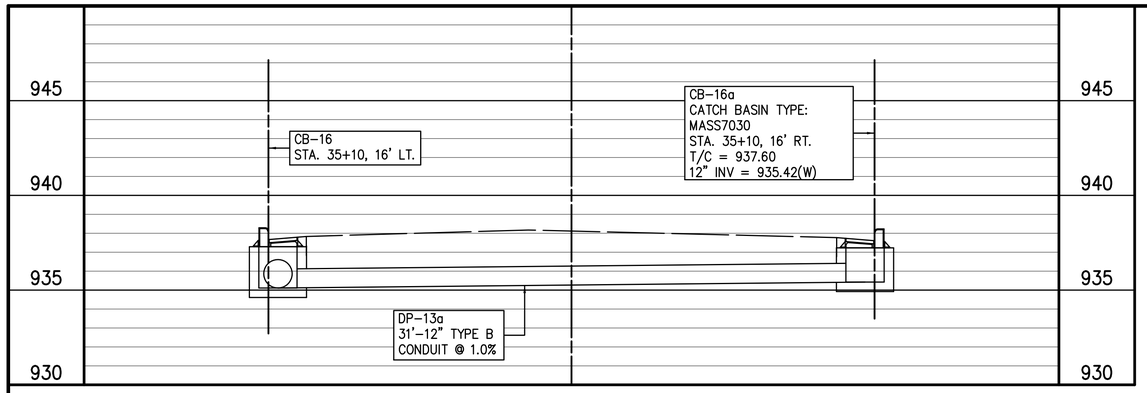

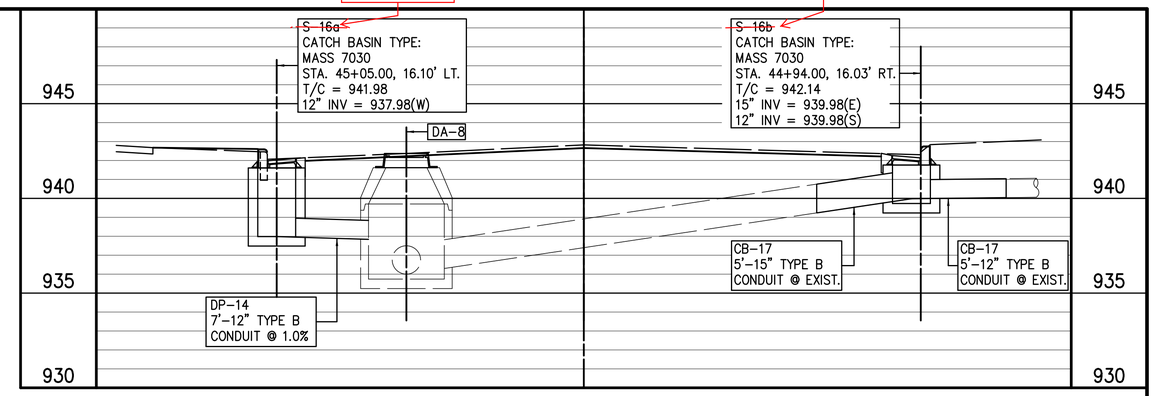

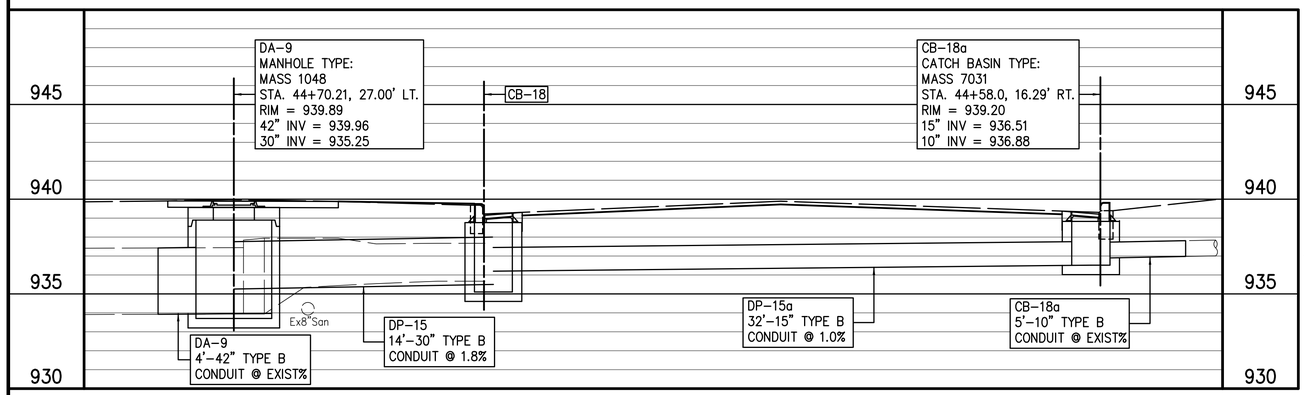

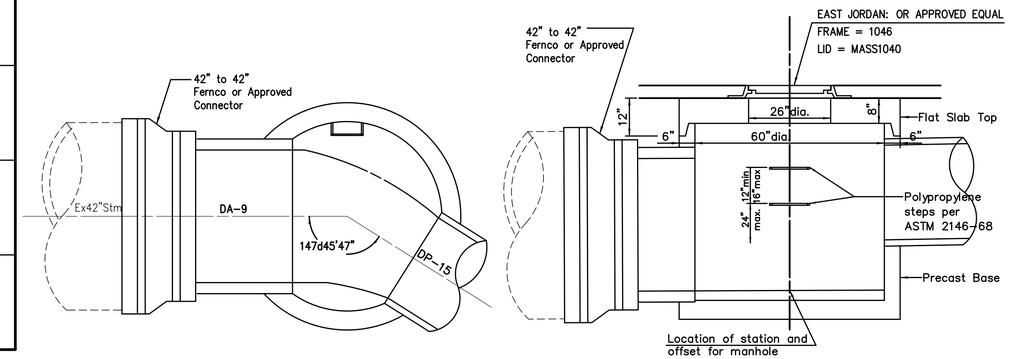

ITEM 604 DRAINAGE MANHOLE MASS1046

DA–9

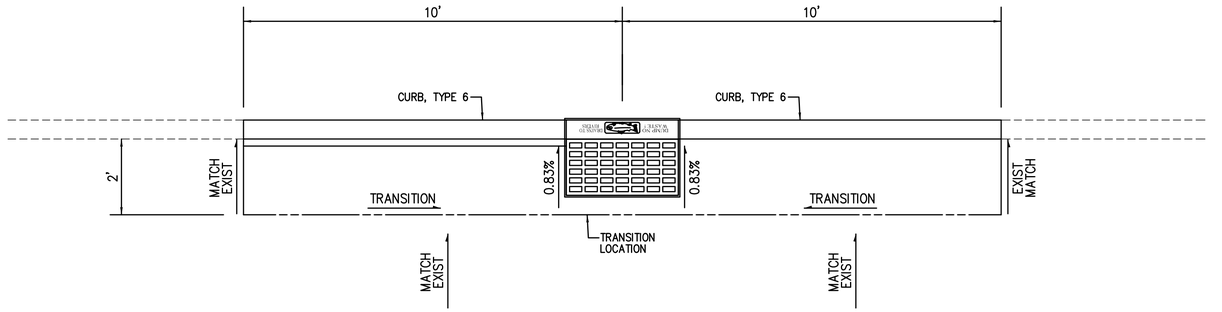

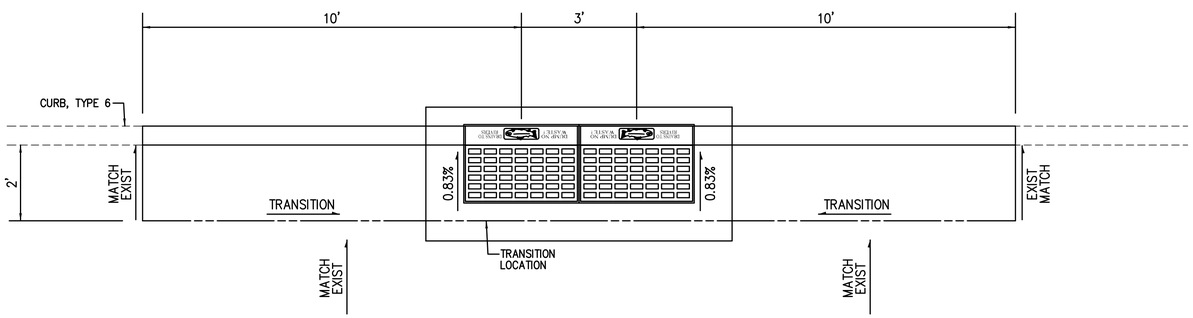

GUTTER PAVING

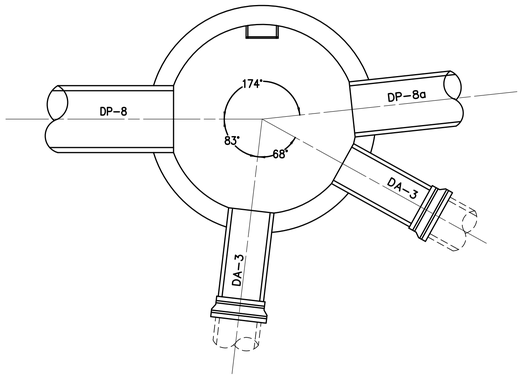

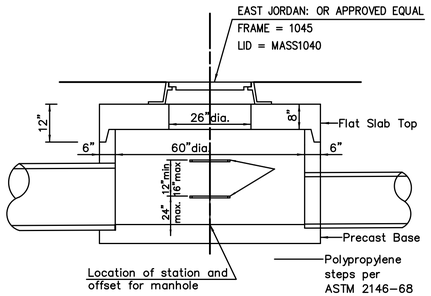

ITEM 604 DRAINAGE MANHOLE MASS1045

DA–3

NW NE SW SE N

VERTICAL IN FEET 0 2 4

HORIZONTAL SCALE IN FEET 0 2 4

CHECKED BY: KAD
DATE: MAY, 2012
DRAWN BY: FPW
DATE: MAY, 2012

REVISIONS:

DATE	DESCRIPTION

1st St NE Improvement Project
Drainage Profile and Details
City of Massillon
Stark County, Ohio

Kathy Catazaro-Perry, Mayor
Massillon
City of Champions

DRAWING NAME: 1StNEdrgprf2.DWG
CITY NUMBER: 10ss03

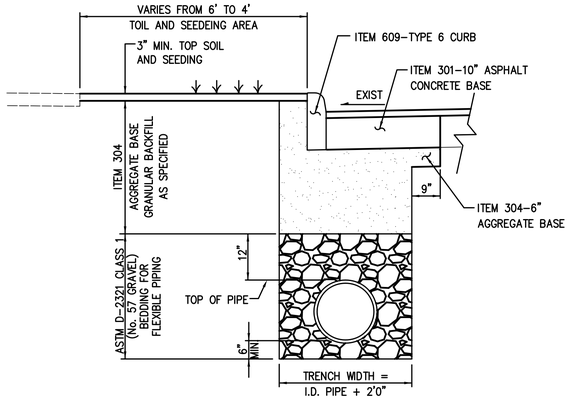

TRENCH DETAIL WITHIN CURB AREA

ALL MATERIALS AND LABOR EXCEPT ITEM 609 INCLUDED IN ITEM 603

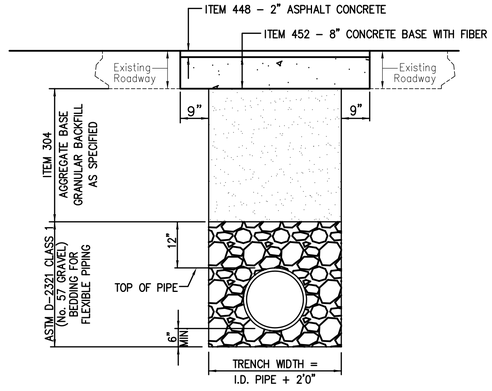

TRENCH DETAIL WITHIN ROADWAY

ALL MATERIALS AND LABOR INCLUDED IN ITEM 603

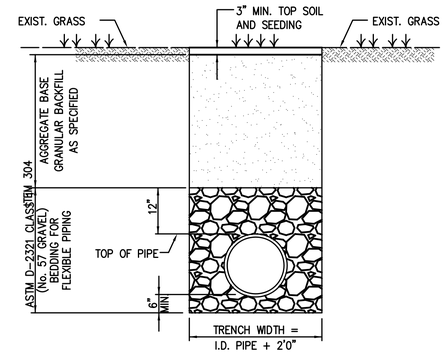

TRENCH DETAIL OUTSIDE ROADWAY

ALL MATERIALS AND LABOR INCLUDED IN ITEM 603

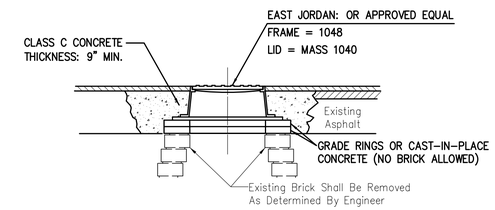

NOTE: ALL CASTINGS, LIDS AND GRATES ARE TO BE CAREFULLY REMOVED AND STORED BY THE CONTRACTOR FOR SALVAGE BY THE CITY OF MASSILLON

ITEM 604 DRAINAGE MANHOLE MASS1048-R

WORK SHALL INCLUDED ALL REMOVAL AND DISPOSAL OF EXISTING

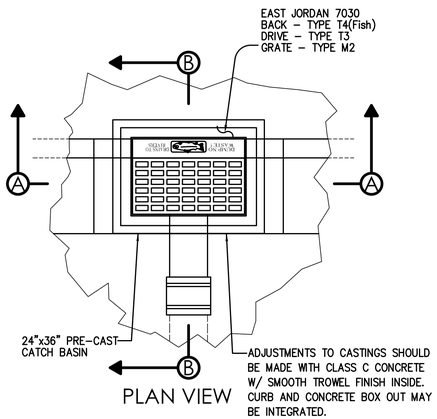

PLAN VIEW

NOTE:
ALL MATERIAL AND LABOR TO PERFORM THE PROPER INSTALLATION OF TYPE 7030 SHALL BE INCLUDED IN THE UNIT PRICE BID. THIS INCLUDES BUT NOT LIMITED TO 57 GRAVEL, ITEM 304 AGGREGATE BASE, PIPE, FERNCO, CLASS C CONC., CONC. COLLAR, AND CURBIING.

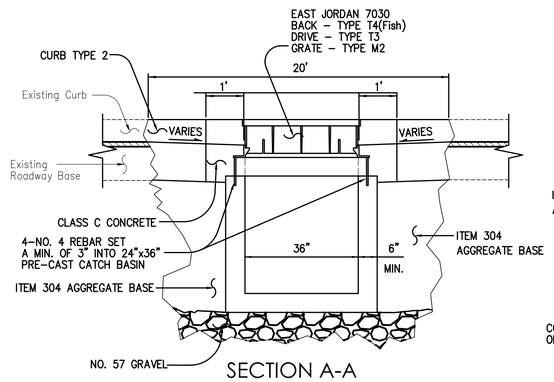

SECTION A-A

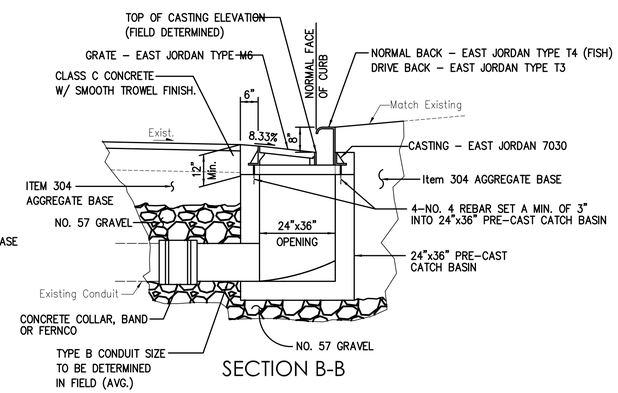

SECTION B-B

ITEM 604 CATCH BASIN MASS7030

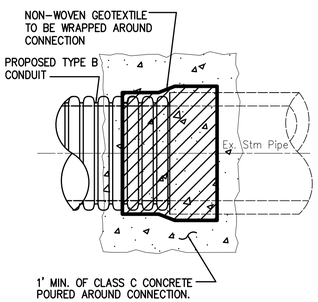

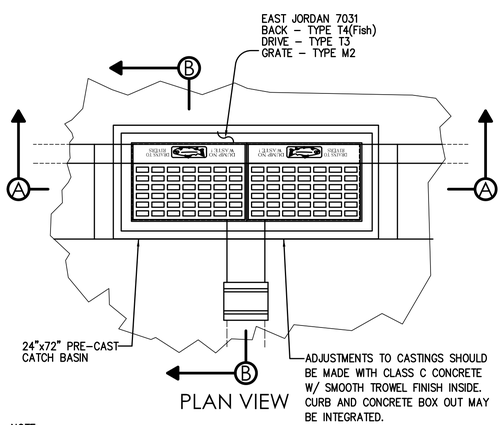

PLAN VIEW

NOTE:
ALL MATERIAL AND LABOR TO PERFORM THE PROPER INSTALLATION OF TYPE 7030 SHALL BE INCLUDED IN THE UNIT PRICE BID. THIS INCLUDES BUT NOT LIMITED TO 57 GRAVEL, ITEM 304 AGGREGATE BASE, PIPE, FERNCO, CLASS C CONC., CONC. COLLAR, AND CURBIING.

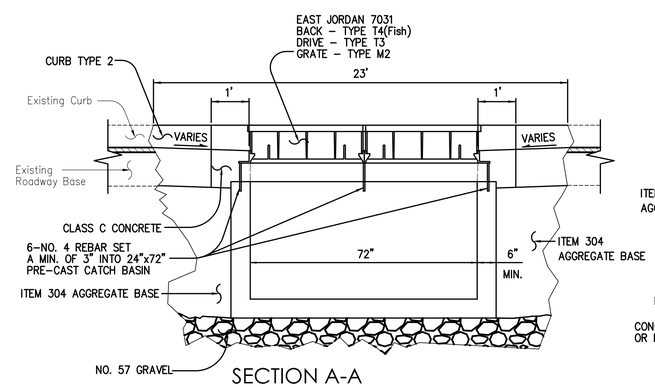

SECTION A-A

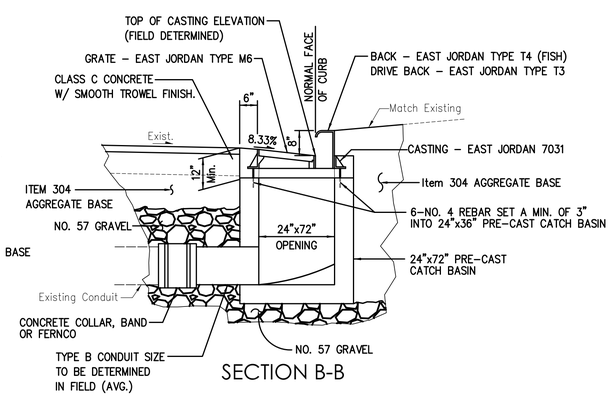

SECTION B-B

ITEM 604 CATCH BASIN MASS7031

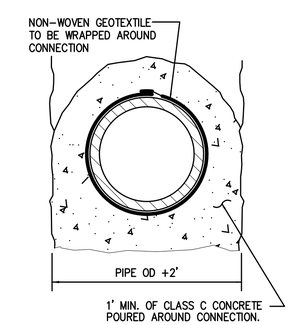

CONCRETE COLLAR

COST TO BE INCLUDED IN ITEM 603 CONDUIT

NW NE SW SE

VERTICAL IN FEET 0 1 2

HORIZONTAL SCALE IN FEET 0 1 2

CHECKED BY: KAD
DATE: MAY, 2012
DRAWN BY: FPW
DATE: MAY, 2012

REVISIONS:

DATE	DESCRIPTION

1st St NE Improvement Project
Utility Details
City of Massillon
Stark County, Ohio

Kathy Catazaro-Perry, Mayor
Massillon
City of Champions

DRAWING NAME: 1StNEUtilDtl.DWG
CITY NUMBER: 10st03

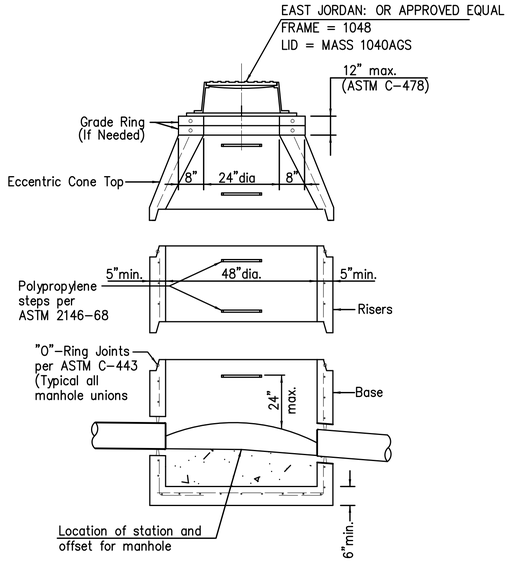

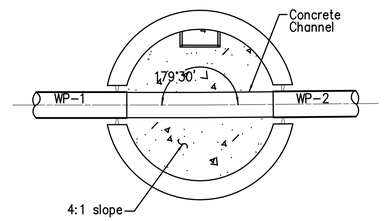

ITEM 604 SANITARY MANHOLE MASS1048-AGS (WW-1)

PRECAST CONCRETE MANHOLE

JOINTS TO BE SEALED WITH CON SEAL FED SPEC SS-S-210A

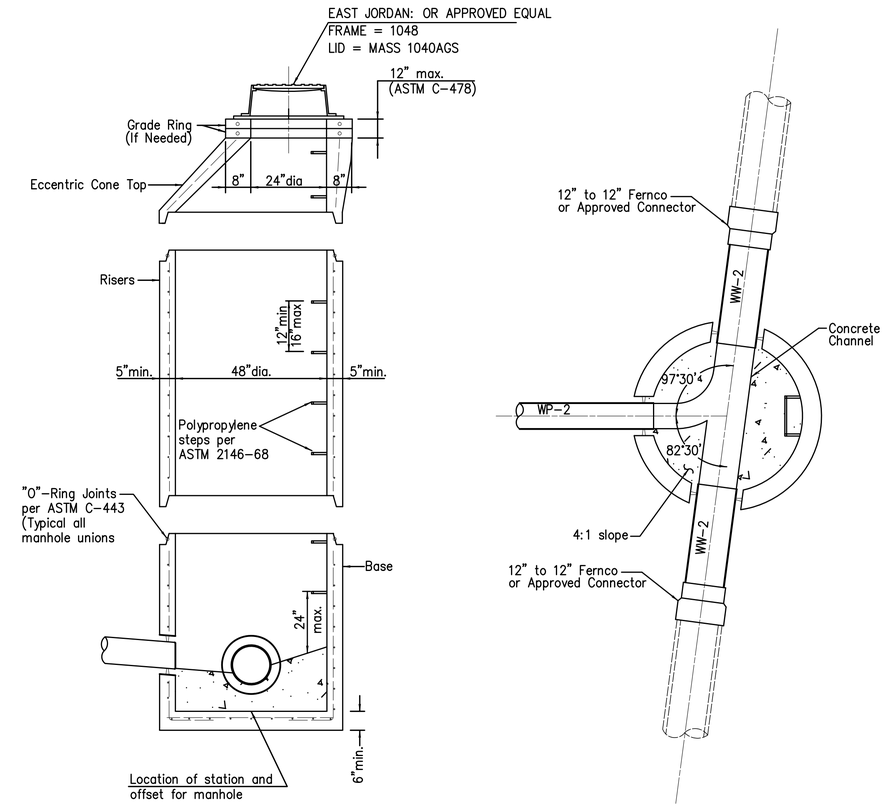

ITEM 604 SANITARY MANHOLE MASS1048-AGS (WW-2)

PRECAST CONCRETE MANHOLE

JOINTS TO BE SEALED WITH CON SEAL FED SPEC SS-S-210A

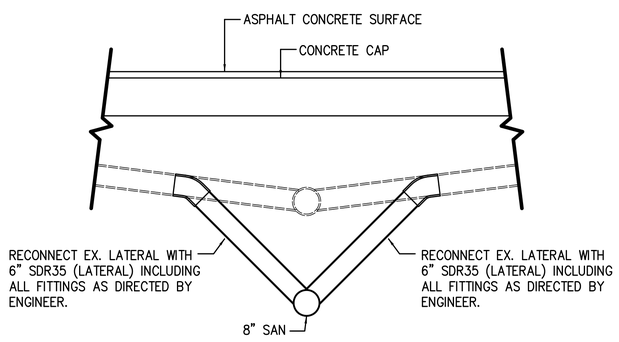

NOTE: REMOVAL OF EXISTING LATERAL AND RECONNECTION INCLUDING ALL FITTING AND PIPE SHALL BE INCLUDED THE ITEM 603 6" SDR35 (LATERAL)

ITEM 603 6" SDR35 (LATERAL)

60 LIN FT

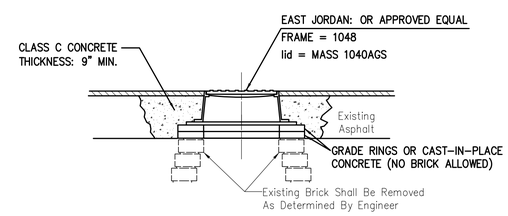

NOTE: ALL CASTINGS, LIDS AND GRATES ARE TO BE CAREFULLY REMOVED AND STORED BY THE CONTRACTOR FOR SALVAGE BY THE CITY OF MASSILLON

ITEM 604 SANITARY MANHOLE MASS1048-AGS-R

WORK SHALL INCLUDED ALL REMOVAL AND DISPOSAL OF EXISTING

NW NE SW SE

VERTICAL IN FEET 0 1 2

HORIZONTAL SCALE IN FEET 0 1 2

CHECKED BY: KAD

DATE: MAY, 2012

DRAWN BY: FPW

DATE: MAY, 2012

REVISIONS:

DATE	DESCRIPTION

1st St NE Improvement Project

Sanitary Details

City of Massillon
Stark County, Ohio

Kathy Catazaro-Perry, Mayor

Massillon
City of Champions

DRAWING NAME: 1StNESanDtl.DWG

CITY NUMBER: 10ss03

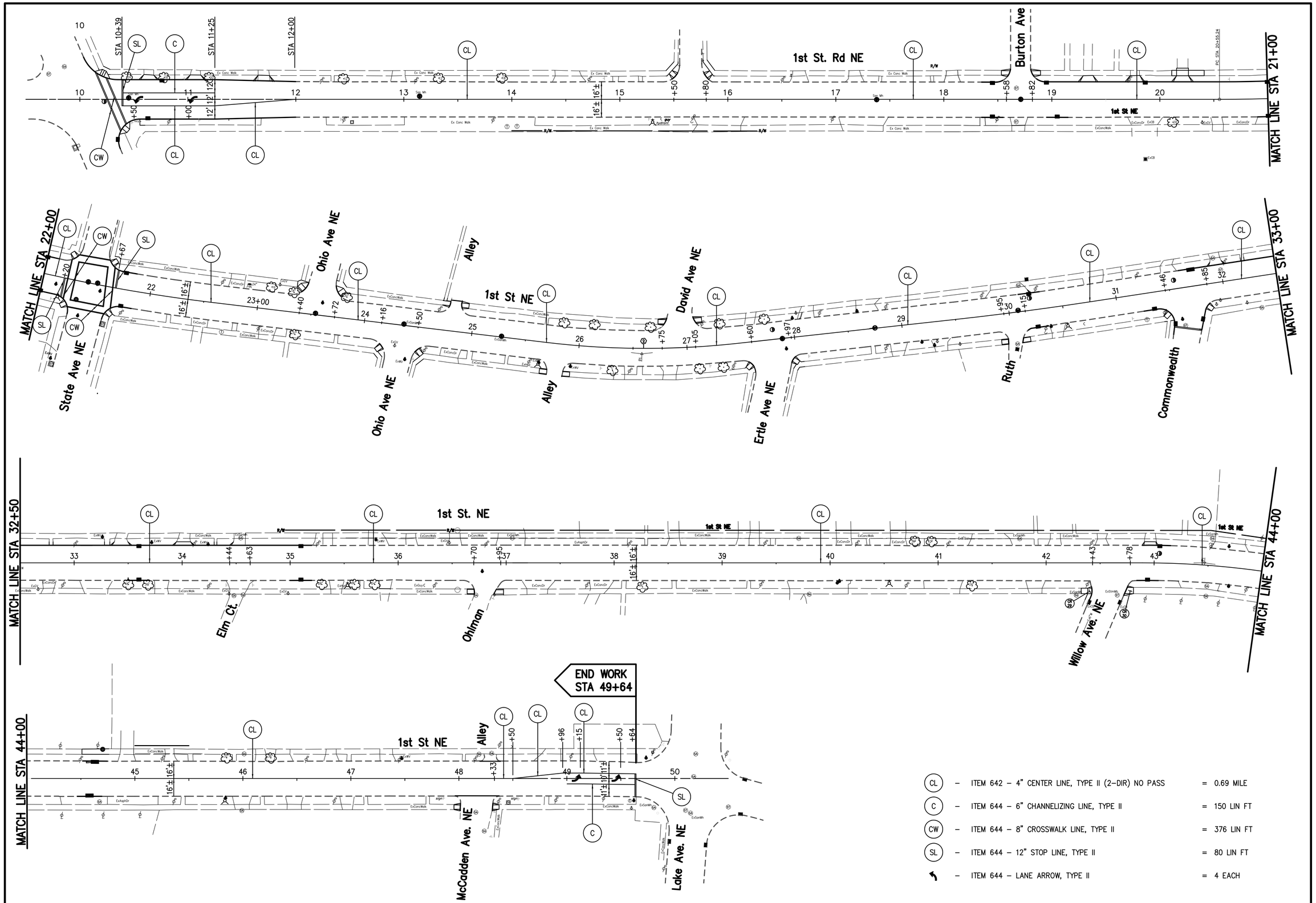

CL	–	ITEM 642 – 4" CENTER LINE, TYPE II (2-DIR) NO PASS	= 0.69 MILE
C	–	ITEM 644 – 6" CHANNELIZING LINE, TYPE II	= 150 LIN FT
CW	–	ITEM 644 – 8" CROSSWALK LINE, TYPE II	= 376 LIN FT
SL	–	ITEM 644 – 12" STOP LINE, TYPE II	= 80 LIN FT
	–	ITEM 644 – LANE ARROW, TYPE II	= 4 EACH

VERTICAL IN FEET 40 20 0

0 20 40
HORIZONTAL SCALE IN FEET

CHECKED BY: KAD
DATE: MAY, 2012
DRAWN BY: FPW
DATE: MAY, 2012

REVISIONS:

DATE	DESCRIPTION

1st St NE Improvement Project
Traffic Control
City of Massillon
Stark County, Ohio

Kathy Catazaro-Perry, Mayor
Massillon
City of Champions

DRAWING NAME: 1StNETrafDet.DWG
CITY NUMBER: 10ss03