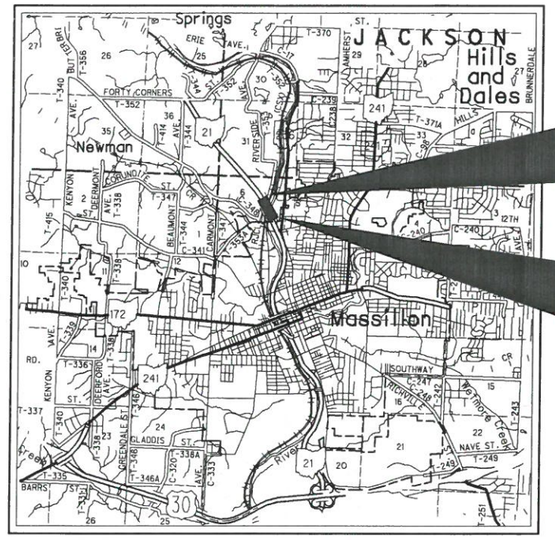

END PROJECT STA 666+75.00

BEGIN PROJECT STA 658+00.00

LOCATION MAP

LATITUDE: N40°49'00" LONGITUDE: W81°31'50"

SCALE IN MILES

0 1 2 3 4

N

PORTION TO BE IMPROVED _____

INTERSTATE & DIVIDED HIGHWAY _____

UNDIVIDED STATE & FEDERAL ROUTES _____

OTHER ROADS _____

DESIGN DESIGNATION

CURRENT ADT (2007)	12200
DESIGN YEAR ADT (2027)	15700
DESIGN HOURLY VOLUME (2024)	1413
DIRECTIONAL DISTRIBUTION	60%
TRUCKS (24 HOUR B&C)	15%
DESIGN SPEED	60 MPH
LEGAL SPEED	60 MPH

(50 MPH WITHIN MASSILLON CITY LIMITS)

DESIGN FUNCTIONAL CLASSIFICATION:
ARTERIAL (URBAN)

DESIGN EXCEPTIONS

NONE REQUIRED

UNDERGROUND UTILITIES
CONTACT BOTH SERVICES
CALL TWO WORKING DAYS
BEFORE YOU DIG
CALL
1-800-362-2764
(TOLL FREE)
OHIO UTILITIES PROTECTION SERVICE
NON-MEMBERS
MUST BE CALLED DIRECTLY
OIL & GAS PRODUCERS PROTECTIVE
SERVICE CALL: 1-800-929-0988

PLAN PREPARED BY:
KORDA
KORDA/NEMETH ENGINEERING, INC - CONSULTING ENGINEERS
1650 Watermark Drive, Suite 200 - Columbus Oh 43215-7010
TEL. 614-487-1650 FAX 614-487-8981 WEB www.korda.com

ENGINEERS SEAL:

SIGNED: _____
DATE: _____

ENGINEERS SEAL:
(STRUCTURES OVER 20 FT)

SIGNED: _____
DATE: _____

STATE OF OHIO

DEPARTMENT OF TRANSPORTATION

STA-21-12.48
PART 2

RECONSTRUCTION OF EXISTING SEPARATED CROSSING WITH THE R.J. CORMAN RAILROAD COMPANY
CITY OF MASSILLON
PERRY TOWNSHIP
STARK COUNTY

FOR PART 1, SEE STA-21-8.25

INDEX OF SHEETS:

TITLE SHEET	1
TYPICAL SECTIONS	2,3
GENERAL NOTES	4
GENERAL SUMMARY	5
CENTERLINE CONTROL AND REFERENCES	6
MAINTENANCE OF TRAFFIC	7-54
PLAN AND PROFILE	55-61
CROSS SECTIONS	62-73
STORM SEWER PROFILES	74
TRAFFIC CONTROL	75-80
STRUCTRUES OVER 20 FT	81-114
RIGHT OF WAY	115

STANDARD CONSTRUCTION DRAWINGS	SUPPLEMENTAL SPECIFICATIONS
SEE PART 1	SEE PART 1
SEE PART 1	SPECIAL PROVISIONS
	SEE PART 1

PROJECT DESCRIPTION

IMPROVEMENT OF 0.17 OF A MILE OF STATE ROUTE 21 BY MAJOR REHABILITATION OF TWIN STRUCTURES, BRIDGE NOS. : STA-21-12.48 LEFT AND RIGHT, OVER TUSCARAWAS RIVER, R.J. CORMAN RAILROAD, AND T.R. 353, INCLUDING DECK, PIER CAP AND APPROACH SLAB REPLACEMENTS AND RECONSTRUCTION OF APPROACH ROADWAY.

PROJECT EDA =
CONTRACTOR EDA =
NOI EDA =

LIMITED ACCESS

THIS IMPROVEMENT IS ESPECIALLY DESIGNED FOR THROUGH TRAFFIC AND HAS BEEN DECLARED A LIMITED ACCESS HIGHWAY OR FREEWAY BY ACTION OF THE DIRECTOR IN ACCORDANCE WITH THE PROVISIONS OF SECTION 5511.02 OF THE OHIO REVISED CODE.

2005 SPECIFICATIONS

THE STANDARD SPECIFICATIONS OF THE STATE OF OHIO, DEPARTMENT OF TRANSPORTATION, INCLUDING CHANGES AND SUPPLEMENTAL SPECIFICATIONS LISTED IN THE PROPOSAL SHALL GOVERN THIS IMPROVEMENT.

I HEREBY APPROVE THESE PLANS AND DECLARE THAT THE MAKING OF THIS IMPROVEMENT WILL NOT REQUIRE THE CLOSING TO TRAFFIC OF THE HIGHWAY AND THAT PROVISIONS FOR THE MAINTENANCE AND SAFETY OF TRAFFIC WILL BE AS SET FORTH ON THE PLANS AND ESTIMATES.

APPROVED _____
DATE _____ DISTRICT DEPUTY DIRECTOR

APPROVED _____
DATE _____ DIRECTOR, DEPARTMENT OF TRANSPORTATION

FEDERAL PROJECT NO.

PID NO. 25433

CONSTRUCTION PROJECT NO.

RAILROAD INVOLVEMENT R.J. CORMAN RAILROAD

STA-21-12.48

1
115

7/31/2006 11:59:28 AM

H:\Projects\2006\2006-0007 STA-21-12.48 Part 2\Civil\Drawings\Front-End Sheets\25433GT001.dgn

25433GT001.dgn

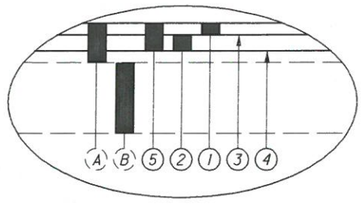

OVERLAY DETAIL
(SEE NOTE 1)

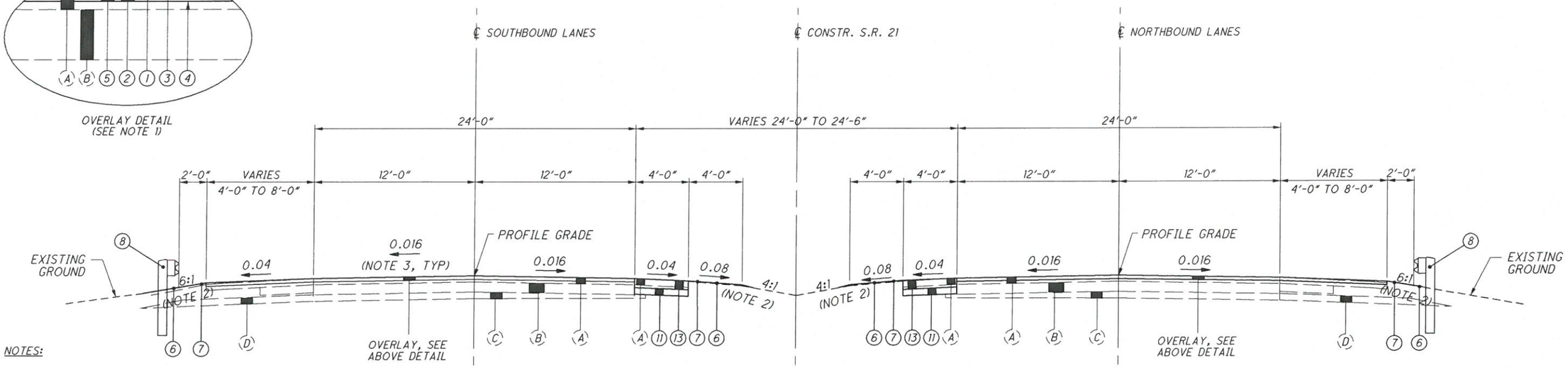

NOTES:

1. EXISTING PAVEMENT SHALL BE PLANED AT A VARIABLE DEPTH TO BRING THE SURFACE TO 3½" BELOW AND PARALLEL TO THE PROPOSED PAVEMENT SURFACE.
2. UNLESS OTHERWISE SHOWN ON THE CROSS SECTIONS.
3. OR MATCH EXISTING.

ITEM LEGEND - PROPOSED

(1) ITEM 442 1½" ASPHALT CONCRETE SURFACE COURSE, TYPE A
(2) ITEM 442 1¾" ASPHALT CONCRETE INTERMEDIATE COURSE, TYPE B
(3) ITEM 407 TACK COAT FOR INTERMEDIATE COURSE
(4) ITEM 407 TACK COAT
(5) ITEM 254 PAVEMENT PLANING, ASPHALT CONCRETE, VARIES 0" TO 3½" MAX. (SEE NOTE 1)
(6) ITEM 617 COMPACTED AGGREGATE
(7) ITEM 659 SEEDING AND MULCHING
(8) ITEM 606 GUARDRAIL, TYPE 5
(9) ITEM 204 SUBGRADE COMPACTION
(10) ITEM 526 REINFORCED CONCRETE APPROACH SLAB (T=15")
(11) ITEM 304 6" AGGREGATE BASE
(12) ITEM 305 9" CONCRETE BASE
(13) ITEM 301 8" ASPHALT CONCRETE BASE
(14) ITEM 448 ASPHALT CONCRETE INTERMEDIATE COURSE, TYPE 2 (VARIABLE DEPTH, APPROX. 1¾")

ITEM LEGEND - EXISTING

(A) EXISTING 5" ASPHALT CONCRETE
(B) EXISTING 9" REINFORCED PORTLAND CEMENT CONCRETE PAVEMENT
(C) EXISTING AGGREGATE SUBBASE VARIES 3" TO 6"
(D) EXISTING 6" AGGREGATE DRAINS
(E) EXISTING CURB
(F) EXISTING CONCRETE APPROACH SLAB (T=15")

NORMAL SECTION

SECTION APPLIES:

S.B. STA. 652+25.00 TO STA. 657+75.00	= 575.00 L.F.
N.B. STA. 652+25.00 TO STA. 658+25.00	= 600.00 L.F.
S.B. STA. 666+50.00 TO STA. 673+10.00	= 660.00 L.F.
N.B. STA. 667+00.00 TO STA. 676+25.00	= 925.00 L.F.
TOTAL	= 2760.00 L.F.

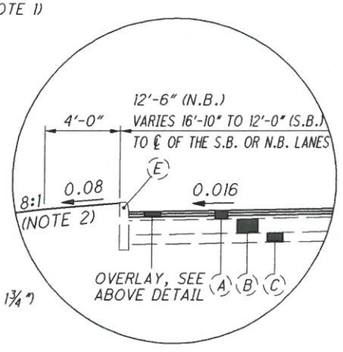

PARTIAL SECTION

(MEDIAN LANE S.B. AND N.B.)

SECTION APPLIES:

S.B. STA. 651+20.00 TO STA. 652+25.00	= 105.00 L.F.
N.B. STA. 649+30.00 TO STA. 652+25.00	= 295.00 L.F.
TOTAL	= 400.00 L.F.

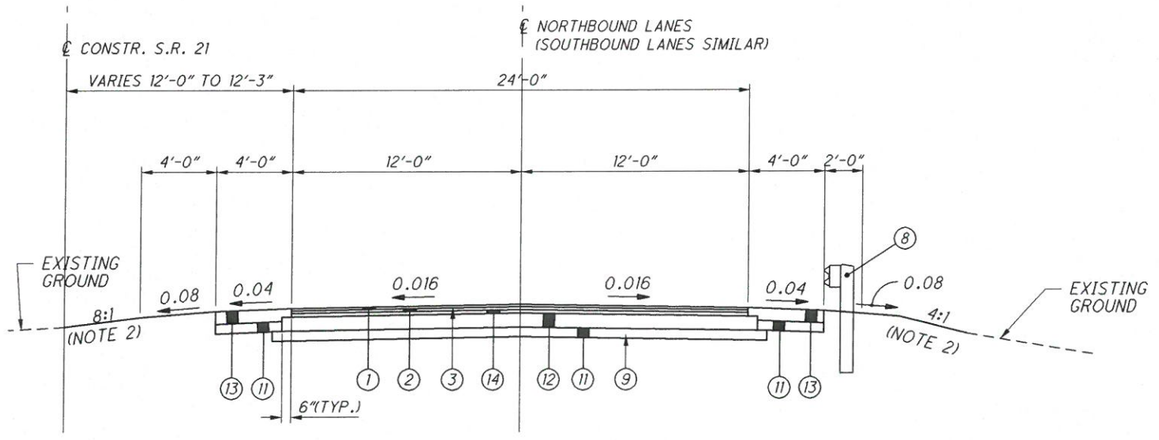

NORMAL SECTION (PAVEMENT REPLACEMENT)

SECTION APPLIES:

S.B. STA. 657+75.00 TO STA. 658+19.53	= 44.53 L.F.
N.B. STA. 658+25.00 TO STA. 658+77.49	= 52.49 L.F.
S.B. STA. 665+85.65 TO STA. 666+50.00	= 64.35 L.F.
N.B. STA. 666+43.61 TO STA. 667+00.00	= 56.39 L.F.
TOTAL	= 217.76 L.F.

TYPICAL SECTIONS

STA-21-12.48

7/31/2006 11:59:26 AM
H:\Projects\2006\2006-0007 STA-21-12.48 Part 2\Civil\Drawings\Front-End Sheets\25433GY001.dgn
25433GY001.dgn

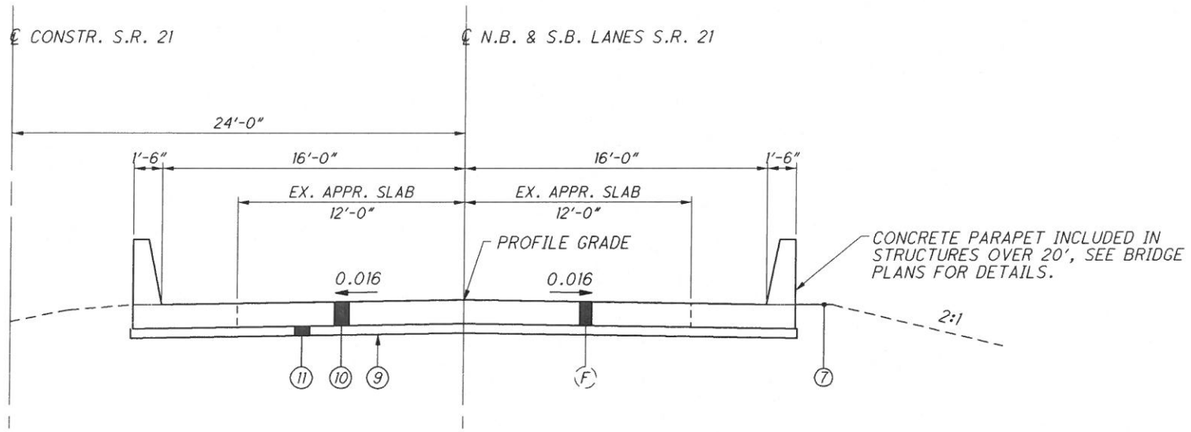

APPROACH SLAB TYPICAL - S.R. 21

(N.B. SHOWN, S.B. SIMILAR)

SECTION APPLIES:

STA. 658+79.45 TO STA. 666+41.64 = 762.19 L.F.

DEDUCT FOR STRUCTURE STA 21-12.48:

STA. 659+04.45 TO STA. 666+16.64 = 712.19 L.F.

TOTAL = 50.00 L.F.

SEE STRUCTURAL PLANS, SHEET 98/115.

FOR PAVEMENT LEGEND SEE SHEET 2/115.

TYPICAL SECTIONS

STA-21-12.48

H:\Projects\2006\2006-0007 STA-21-12.48 Part 2\Civil\Drawings\Front-End Sheets\25433GY002.dgn 7/31/2006 11:59:25 AM
25433GY002.dgn

ROUNDING

THE ROUNDING AT SLOPE BREAKPOINTS SHOWN ON THE TYPICAL SECTIONS APPLY TO ALL CROSS-SECTIONS EVEN THOUGH OTHERWISE SHOWN.

UTILITIES

LISTED BELOW ARE ALL UTILITIES LOCATED WITHIN THE PROJECT CONSTRUCTION LIMITS TOGETHER WITH THEIR RESPECTIVE OWNERS:

GAS: DOMINION EAST OHIO
4725 SOUTHWAY S.W.
CANTON, OH 44706
(330) 478-3136
STEVE CROWL

TELEPHONE: AT&T
50 W. BOWERY STREET, 4TH FLOOR
AKRON, OH 44308
(330) 384-8057
SABRINA LAMPLY-TALBERT

WATER: AQUA OHIO
6650 SOUTH AVENUE
BOARDMAN, OH 44512
(330) 726-8151
DOUG WARRICK

ELEVATION DATUM

ALL ELEVATIONS ARE BASED ON NAVD88.

CLEARING AND GRUBBING

ALTHOUGH THERE ARE NO TREES OR STUMPS SPECIFICALLY MARKED FOR REMOVAL WITHIN THE LIMITS OF THE PROJECT, A LUMP SUM QUANTITY IS INCLUDED IN THE GENERAL SUMMARY FOR ITEM 201, CLEARING AND GRUBBING. ALL PROVISIONS AS SET FORTH IN THE SPECIFICATIONS UNDER THIS ITEM ARE INCLUDED IN THE LUMP SUM PRICE BID FOR ITEM 201, CLEARING AND GRUBBING.

CONNECTION BETWEEN EXISTING AND PROPOSED GUARDRAIL

WHEN IT IS NECESSARY TO SPLICE PROPOSED GUARDRAIL TO EXISTING GUARDRAIL, ONLY THE EXISTING GUARDRAIL SHALL BE CUT, DRILLED, OR PUNCHED. THE CONNECTION SHALL BE MADE USING A "W-BEAM RAIL SPLICE" AS SHOWN IN AASHTO M 180. PAYMENT SHALL BE INCLUDED IN THE CONTRACT PRICE FOR THE RESPECTIVE GUARDRAIL ITEMS.

ITEM 606 - IMPACT ATTENUATOR, TYPE 1-98 [UNIDIRECTIONAL OR BIDIRECTIONAL)]

THIS ITEM SHALL CONSIST OF FURNISHING AND INSTALLING EITHER OF THE FOLLOWING IMPACT ATTENUATORS:

1) THE C-A-T MANUFACTURED BY TRINITY INDUSTRY, 1170 N. STATE STREET, GIRARD, OHIO 44420 (TELEPHONE: 330-545-4373).

THE LENGTH OF THE C-A-T SYSTEM IS CONSIDERED TO BE 31'-3" LONG. INSTALLATION SHALL BE AT THE LOCATIONS SPECIFIED IN THE PLANS, IN ACCORDANCE WITH THE MANUFACTURER'S SPECIFICATIONS AS DETAILED ON THE FOLLOWING PRE-APPROVED SHOP DRAWINGS:

DWG. NO.	DRAWING NAME	DWG./ REV. DATE	ODOT APPROVAL DATE
SS245M	CRASH-CUSHION ATTENUATING TERMINAL PLAN, ELEVATION & SECTIONS FOR USE AS A LONGITUDINAL MEDIAN BARRIER TERMINAL OR CRASH CUSHION ATTENUATOR	4/10/97 Rev. 4	3/6/98
SS224M	C-A-T TRANSITION TO MEDIAN BARRIER GUARDRAIL PLAN, ELEVATION & SECTIONS	4/26/96	3/6/98
SS226M	C-A-T TRANSITION TO VERTICAL WALL OR PIER PLAN, ELEVATION & SECTIONS	4/26/96	3/6/98

2) THE BRAKEMASTER MANUFACTURED BY ENERGY ABSORPTION SYSTEMS, INC., ONE EAST WACKER DRIVE, CHICAGO, IL 60601 (TELEPHONE: 312-467-6750).

THE LENGTH OF THE BRAKEMASTER SYSTEM IS CONSIDERED TO BE 32'-8" LONG. INSTALLATION SHALL BE AT THE LOCATIONS SPECIFIED IN THE PLANS, IN ACCORDANCE WITH THE MANUFACTURER'S SPECIFICATIONS AS DETAILED ON THE FOLLOWING PRE-APPROVED SHOP DRAWINGS:

DWG. NO.	DRAWING NAME	DWG./ REV. DATE	ODOT APPROVAL DATE
92-00-01	BRAKEMASTER GENERAL ASSEMBLY (UNIDIRECTIONAL SYSTEM)	3/6/97 Rev. K	3/6/98
92-00-81	BRAKEMASTER (UNIDIRECTIONAL) WITH FOUNDATION TUBES	2/9/98	3/6/98
92-00-02	BRAKEMASTER GENERAL ASSEMBLY (BIDIRECTIONAL SYSTEM)	3/10/97 Rev. K	3/6/98
92-00-82	BRAKEMASTER (BIDIRECTIONAL) WITH FOUNDATION TUBES	2/9/98	3/6/98
9202024	ANCHOR ASSEMBLY, FOUNDATION TUBE, 6 1/2 FT., BRS	6/12/97 Rev. D	3/6/98

3) THE FLEAT-MT MANUFACTURED BY ROAD SYSTEMS, INC. (RSI), 3616 OLD HOWARD COUNTY AIRPORT ROAD, BIG SPRINGS, TX, 79720 (TELEPHONE 915-263-2435) AND AVAILABLE FROM RSI'S LIST OF APPROVED DISTRIBUTORS.

THE LENGTH OF THE FLEAT-MT SYSTEM IS CONSIDERED TO BE 37'-6" LONG. INSTALLATION SHALL BE AT THE LOCATIONS SPECIFIED IN THE PLANS, IN ACCORDANCE WITH THE MANUFACTURER'S SPECIFICATION AS DETAILED ON THE FOLLOWING PRE-APPROVED SHOP DRAWINGS AND THE MANUFACTURERS INSTALLATION MANUAL.

DWG. NO.	DRAWING NAME	DWG./ REV. DATE	ODOT APPROVAL DATE
MEDFLT-W-US	FLARED ENERGY ABSORBING TERMINAL - FLEAT-MT ASSEMBLY FOR WOOD BREAKAWAY POST SYSTEM	4/10/02 Rev. 5	1/6/03
MEDFLT-S-US	FLARED ENERGY ABSORBING TERMINAL - FLEAT-MT ASSEMBLY FOR STEEL BREAKAWAY POST SYSTEM	4/10/02 Rev. 6	1/6/03
MEDFLT-W-M	FLARED ENERGY ABSORBING TERMINAL - FLEAT-MT (Metric) ASSEMBLY FOR WOOD BREAKAWAY POST SYSTEM	4/10/02 Rev. 5	1/6/03
MEDFLT-S-M	FLARED ENERGY ABSORBING TERMINAL - FLEAT-MT (Metric) ASSEMBLY FOR STEEL BREAKAWAY POST SYSTEM	4/10/02 Rev. 6	1/6/03

THE FACE OF THE TYPE 1-98 IMPACT HEAD SHALL BE COVERED WITH A SHEET OF TYPE G REFLECTIVE SHEETING, PER CMS 730.19, APPROXIMATELY 36" X 12" (ONE 9" X 18" FOR EACH FLEAT-MT IMPACT HEAD). PAYMENT FOR THE ABOVE WORK SHALL BE MADE AT THE UNIT PRICE BID FOR ITEM 606, IMPACT ATTENUATOR, TYPE 1-98 (UNIDIRECTIONAL OR BIDIRECTIONAL), EACH, AND SHALL INCLUDE ALL LABOR, TOOLS, EQUIPMENT AND MATERIALS NECESSARY TO CONSTRUCT A COMPLETE AND FUNCTIONAL IMPACT ATTENUATOR SYSTEM, INCLUDING ALL RELATED TRANSITIONS, HARDWARE, REFLECTIVE SHEETING AND GRADING, NOT SEPARATELY SPECIFIED, AS REQUIRED BY THE MANUFACTURER.

SEEDING AND MULCHING

THE FOLLOWING QUANTITIES ARE PROVIDED TO PROMOTE GROWTH AND CARE OF PERMANENT SEEDED AREAS:

659, SEEDING AND MULCHING SQ. YD.

659, COMMERCIAL FERTILIZER TON

659, LIME ACRES

659, WATER M. GAL.

SEEDING AND MULCHING SHALL BE APPLIED TO ALL AREAS OF EXPOSED SOIL BETWEEN THE RIGHT-OF-WAY LINES, AND WITHIN THE CONSTRUCTION LIMITS FOR AREAS OUTSIDE THE RIGHT-OF-WAY LINES COVERED BY WORK AGREEMENT OR SLOPE EASEMENT. QUANTITY CALCULATIONS FOR SEEDING AND MULCHING ARE BASED ON THESE LIMITS.

PROFILE AND ALIGNMENT

WHERE OVERLAY IS CALLED FOR ON THE PLANS, PLACE THE PROPOSED PAVEMENT TO FOLLOW THE ALIGNMENT AND PROFILE OF THE EXISTING PAVEMENT. PLACE THE PROPOSED ASPHALT CONCRETE OVERLAY (WITH A UNIFORM THICKNESS OF 3 1/4 INCHES (AS SHOWN ON THE TYPICAL SECTIONS).

PAVEMENT RESTORATION FOR PIPE INSTALLATIONS

THE FOLLOWING QUANTITY HAS BEEN PROVIDED FOR PAVEMENT RESTORATION FOLLOWING INSTALLATION OF PIPES UNDER ITEM 603.

ITEM 301 ASPHALT CONCRETE BASE, PG64-22 CU. YDS.

THE ABOVE QUANTITY IS BASED ON A 301 THICKNESS OF INCHES AND A PAVEMENT RESTORATION WIDTH THAT INCLUDES THE TRENCH WIDTH PLUS TWO FEET ON EACH SIDE OF THE TRENCH. SEE STANDARD CONSTRUCTION DRAWING DM-1.4 FOR TRENCH WIDTH FORMULA AND CALCULATION.

PROVIDE ANY MATERIALS USED OUTSIDE THE LIMITS STATED ABOVE AT NO ADDITIONAL COST.

CALCULATED CLP CHECKED SAN

GENERAL NOTES

STA-21-12.48

H:\Projects\2006\2006-0007 STA-21-12.48 Part 2\Civil\Drawings\Front-End Sheets\25433GN001.dgn
7/31/2006 11:59:23 AM
25433GN001.dgn

CENTERLINE OF SURVEY CONTROL S.R. 21					
STATION	OFFSET	SIDE	STATE PLANE COORDINATES		DESCRIPTIONS
			NORTHING	EASTING	
646+99.92	0.00	℄	418764.99	2237745.88	℄ MONUMENT FOUND
654+13.50	0.00	℄	419406.49	2237433.35	℄ MONUMENT FOUND
666+25.00	0.00	℄	420494.78	2236901.07	℄ MONUMENT SET
671+00.00	0.00	℄	420910.07	2236670.66	℄ MONUMENT SET

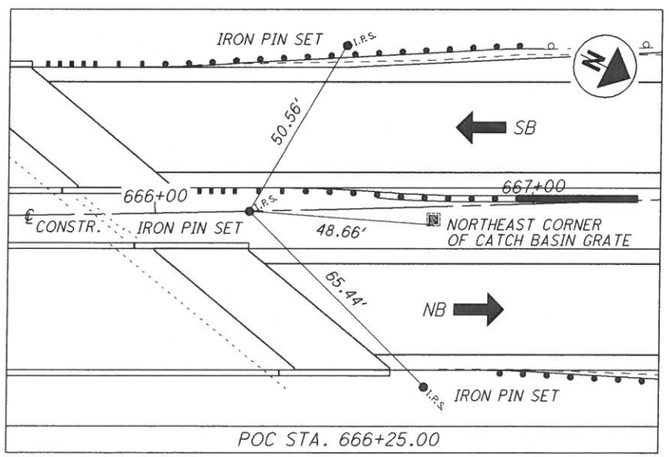

POC STA. 666+25.00

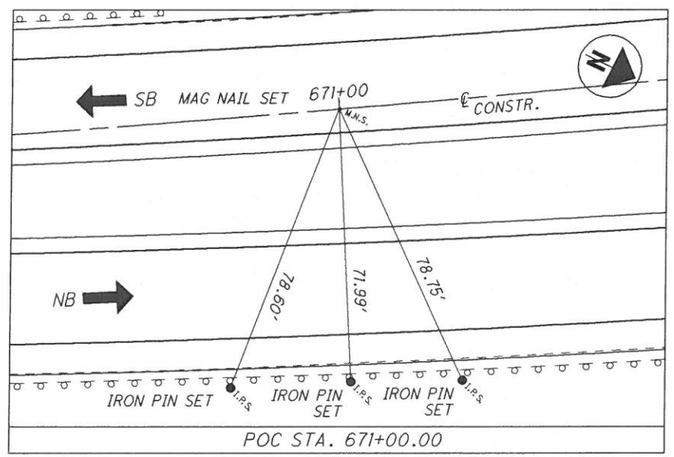

POC STA. 671+00.00

CALCULATED CLP
CHECKED SAN

CENTERLINE CONTROL AND REFERENCES

STA-21-12.48

H:\Projects\2006\2006-0007 STA-21-12.48 Part 2\Civil\Drawings\Front-End Sheets\25433C001.dgn
25433C001.dgn
7/31/2006 11:59:22 AM

NOTIFICATION AND CONTACTS

THE CONTRACTOR SHALL NOTIFY THE FOLLOWING ENTITIES IN WRITING AND VIA TELEPHONE AT LEAST EIGHTEEN (18) DAYS PRIOR TO THE BEGINNING OF THE CONSTRUCTION ACTIVITIES. INCLUDED IN THE NOTIFICATION SHALL BE THE PROJECTED DATES AND TIME FRAMES OF ANY ROAD CLOSURES.

1. OHIO DEPARTMENT OF TRANSPORTATION
   DISTRICT 4
   2088 SOUTH ARLINGTON ROAD
   AKRON, OHIO 44306
   (330)-297-0801 EXT. 339

2. OHIO STATE HIGHWAY PATROL
   CANTON PATROL POST
   4710 SHUFFEL ROAD
   NORTH CANTON, OHIO 44720
   (330)-433-6200

3. STARK COUNTY SHERIFF'S DEPARTMENT
   4500 ATLANTIC BOULEVARD NE
   CANTON, OHIO 44705
   (330)-430-3802

4. STARK COUNTY ENGINEER'S OFFICE
   5165 SOUTHWAY STREET SW
   CANTON, OHIO 44706
   (330)-477-6781

5. CITY OF MASSILLON ENGINEER'S OFFICE
   151 LINCOLN WAY EAST
   MASSILLON, OHIO 44646
   (330)-830-1722

6. CITY OF MASSILLON POLICE DEPARTMENT
   1 JAMES DUNCAN PLAZA
   MASSILLON, OHIO 44646
   (330)-832-9811

7. CITY OF MASSILLON FIRE DEPARTMENT
   233 ERIE STREET SOUTH
   MASSILLON, OHIO 44646
   (330)-833-1053

SHOULD THE PROJECTED DATES AND TIME FRAMES OF THE START AND END OF THE ROAD CLOSURES CHANGE THROUGHOUT THE DURATION OF THE PROJECT, THE AGENCIES LISTED ABOVE MUST BE NOTIFIED IMMEDIATELY OF SUCH CHANGES.

SEQUENCE OF CONSTRUCTION

PROJECT DESCRIPTION:

THIS PROJECT CONSISTS OF THE REDECKING OF THE SR 21 TWIN STRUCTURES OVER THE TUSCARAWAS RIVER AND MINIMAL ROADWAY APPROACH WORK. ONE LANE OF TRAFFIC IN EACH DIRECTION MUST BE MAINTAINED AT ALL TIMES ON SR 21. TRAFFIC WILL BE MAINTAINED ON SR 21 THRU THE CONSTRUCTION OF CROSSOVERS. TRAFFIC MUST ALSO BE MAINTAINED AT ALL TIMES ON RIVERSIDE ROAD (TR 353). RAILWAY; BIKEWAY AND RIVER TRAFFIC MUST ALSO BE MAINTAINED AT ALL TIMES.

CONSTRUCTION PHASE 1:

THE CONTRACTOR SHALL CONSTRUCT THE REQUIRED CROSSOVERS NORTH AND SOUTH OF THE STA-21-1248 BRIDGES. BOTH SETS OF CROSSOVERS SHALL BE CONSTRUCTED AT THIS TIME. THE CONTRACTOR SHALL BE REQUIRED TO INSTALL APPROPRIATE DRAINAGE STRUCTURES TO MAINTAIN PROPER DRAINAGE OF THE ROADWAY FACILITY DURING CONSTRUCTION AS DETAILED ON THE CROSSOVER GEOMETRIC PLANS. CARE SHALL BE TAKEN TO PROTECT THE EXISTING STORM INLETS LOCATED NEAR THE PROPOSED CROSSOVER LOCATIONS.

CONSTRUCTION PHASE 2:

THE CONTRACTOR SHALL CONSTRUCT THE STA-21-1248L STRUCTURE IN THIS PHASE OF CONSTRUCTION. ONE LANE OF TRAFFIC SHALL BE MAINTAINED IN EACH DIRECTION ON THE STA-21-1248R STRUCTURE THROUGH THE USE OF THE CROSSOVERS CONSTRUCTED IN CONSTRUCTION PHASE 1. THE CONTRACTOR SHALL MODIFY THE NORTHBOUND SR 21 APPROACH TO THE SR 21 / LAKE AVENUE INTERSECTION AND THE LAKE AVENUE/ ERIE STREET INTERSECTION AS SHOWN IN THE PLANS. TEMPORARY SIGNAL TIMING MODIFICATIONS SHALL BE MADE TO THE INTERSECTION AS SHOWN IN THE PLAN. UPON COMPLETION OF CONSTRUCTION PHASE 2 ACTIVITIES; THE CONTRACTOR SHALL PROCEED TO PHASE 3.

CONSTRUCTION PHASE 3:

THE CONTRACTOR SHALL CONSTRUCT THE STA-21-1248R STRUCTURE IN THIS PHASE OF CONSTRUCTION. ONE LANE OF TRAFFIC SHALL BE MAINTAINED IN EACH DIRECTION ON THE NEWLY REDECKED STA-21-1248L STRUCTURE THRU THE USE OF THE CROSSOVERS CONSTRUCTED IN CONSTRUCTION PHASE 1. UPON COMPLETION OF CONSTRUCTION PHASE 3 ACTIVITIES, THE CONTRACTOR SHALL RESTORE THE NORMAL TRAFFIC PATTERN TO SR 21 AND RETURN THE SR 21 / LAKE AVENUE AND LAKE AVENUE/ ERIE STREET INTERSECTIONS TO THERE PRECONSTRUCTION INTERSECTION TIMING AND CONFIGURATION. UPON COMPLETION OF PHASE 3 CONSTRUCTION ACTIVITIES, THE CONTRACTOR SHALL PROCEED TO PHASE 4.

CONSTRUCTION PHASE 4:

THE CONTRACTOR SHALL RESURFACE S.R. 21 AND INSTALL PERMANENT SIGNING AND PAVEMENT MARKINGS.

PERMITTED CONSTRUCTION PHASING

WORK SHALL BEGIN WITH PHASE 1 AND PROCEED IN SEQUENCE TO PHASE 4. THE ORDER OF CONSTRUCTION OF PHASES 2 AND 3 MAY BE REVERSED, HOWEVER, THE CONTRACTOR SHALL NOT BE PERMITTED TO PERFORM CONSTRUCTION PHASES 2 AND 3 CONCURRENTLY.

ITEM 614 - LAW ENFORCEMENT OFFICER (WITH PATROL CAR)

IN ADDITION TO THE REQUIREMENTS OF CMS 614 AND THE LATEST EDITION OF THE OHIO MANUAL OF UNIFORM TRAFFIC CONTROL DEVICES (OMUTCD). A UNIFORMED LAW ENFORCEMENT OFFICER (AND OFFICAL PATROL CAR WITH WORKING TOP-MOUNTED EMERGENCY FLASHING LIGHTS) SHALL BE PROVIDED FOR CONTROLLING TRAFFIC FOR THE FOLLOWING TASKS:

FOR LANE CLOSURES: DURING INITIAL SET-UP PERIODS, TEAR DOWN PERIODS, SUBSTANTIAL SHIFTS OF A CLOSURE POINT OR WHEN NEW LANE CLOSURE ARRANGEMENTS ARE INITIATED.

DURING THE ENTIRE ADVANCE PREPARATION AND CLOSURE SEQUENCE WHERE COMPLETE BLOCKAGE OF TRAFFIC IS REQUIRED.

DURING A TRAFFIC SIGNAL INSTALLATION.

LAW ENFORCEMENT OFFICERS (LEOS) SHOULD NOT BE USED WHERE THE OMUTCD INTENDS THAT FLAGGERS BE USED. THE LEOS ARE CONSIDERED TO BE EMPLOYED BY THE CONTRACTOR AND THE CONTRACTOR SHALL BE REPSPONSIBLE FOR THEIR ACTIONS. ALTHOUGH THEY ARE EMPLOYED BY THE CONTRACTOR, THE ENGINEER SHALL HAVE CONTROL OVER THEIR PLACEMENT. THE OFFICIAL PATROL CAR SHALL BE A PUBLIC SAFETY VEHICLE AS REQUIRED BY THE OHIO REVISED CODE. THE CONTRACTOR SHALL MAKE ARRANGEMENTS FOR THESE SERVICES WITH:

THE OHIO STATE HIGHWAY PATROL
CANTON PATROL POST
4710 SHUFFLE ROAD
NORTH CANTON, OHIO 44720
PHONE: (330)-433-6200
FAX: (330)-433-6230

IF AFTER CONTACTING THE OHIO HIGHWAY PATROL, IT IS DETERMINED THAT THEY CANNOT SUPPLY THE LEO, THEN AN AUTHORIZED MUNICIPAL OR COUNTY POLICE OFFICER WITH A MARKED AND FLASHER-LIGHT EQUIPPED OFFICAL POLICE OR PATROL CAR SHALL BE PROVIDED.

LAW ENFORCEMENT OFFICERS WITH PATROL CAR REQUIRED BY THE TRAFFIC MAINTENANCE TASKS ABOVE SHALL BE PAID FOR AN HOURLY BASIS UNDER ITEM 614 LAW ENFORCEMENT OFFICER WITH PATROL CAR. THE FOLLOWING ESTIMATED QUANTITIES HAVE BEEN CARRIED TO THE GENERAL SUMMARY:

ITEM 614, LAW ENFORCEMENT OFFICER WITH PATROL CAR 32 HOURS

THE HOURS PAID SHALL INCLUDED THE MINIMUM SHOW-UP TIME REQUIRED BY THE LAW ENFORCEMENT AGENCY INVOLVED.

IF THE CONTRACTOR WISHES TO UTILIZE LEO'S FOR FLAGGING AND TRAFFIC CONTROL OTHER THAN FOR THAT REQUIRED IN THESE PLANS, HE MAY DO SO AT HIS OWN EXPENSE. PAYMENT FOR THE EXCESS ABOVE THE CONTRACT REQUIREMENTS WILL BE INCLUDED UNDER ITEM 614 MAINTAINING TRAFFIC.

CALCULATED LOB CHECKED MAH

GPD ASSOCIATES

MAINTENANCE OF TRAFFIC GENERAL NOTES

STA-21-12.48

1/48

7/115

H:\PROJECTS\2006\2006-0007 STA-21-12.49 PART 2\CIVIL\DRAWINGS\MOT\GPD STAGE 2 DGNS 7-27-06\STAGE 1 ELECTRONIC SUBMITTAL\2543GN#001.DGN
7/31/2006
1:54:54 AM
USER#

ITEM 614 - MAINTENANCE OF TRAFFIC, AS PER PLAN

THIS ITEM SHALL CONSIST OF MAINTENANCE OF TRAFFIC ON EXISTING ROADWAYS AND RAMPS IN ACCORDANCE WITH THE OHIO MANUAL OF UNIFORM TRAFFIC CONTROL DEVICES FOR STREETS AND HIGHWAYS, CURRENT EDITION, LATEST REVISION, THE SPECIFICATIONS AND THE FOLLOWING:

1. A MINIMUM OF ONE (1) ELEVEN FOOT LANE IN EACH DIRECTION SHALL BE MAINTAINED ON S.R. 21.

2. THE CONTRACTOR SHALL INFORM THE DISTRICT OFFICE (330) 786-2211 EXT 209, EIGHTEEN (18) DAYS PRIOR TO THE BEGINNING OF WORK.

3. CONES SHALL NOT BE ACCEPTABLE TRAFFIC CONTROL DEVICES FOR LANE RESTRICTIONS OR LANE REDUCTIONS THAT ARE IN OPERATION ONE-HALF HOUR AFTER SUNSET OR ONE HALF-HOUR BEFORE SUNRISE. ALL NIGHTTIME LANE RESTRICTIONS SHALL REQUIRE DRUMS OR BARRICADES AT A MAXIMUM SPACING OF FIFTY (50) FEET.

4. LANE RESTRICTIONS OR LANE REDUCTIONS SHALL NOT BE PERMITTED AFTER NORMAL WORKING HOURS. NORMAL WORKING HOURS SHALL BE THOSE HOURS DURING WHICH THE CONTRACTOR HAS A FULL COMPLEMENT OF EMPLOYEES AND EQUIPMENT ACTIVELY REMOVING AND/OR PLACING PAVEMENT MATERIALS.

5. THE CONTRACTOR SHALL FURNISH, ERECT, MAINTAIN AND SUBSEQUENTLY REMOVE ALL FLAGS, BARRICADES, SIGNS, SIGN SUPPORTS AND FURNISH AND MAINTAIN ALL FLAGGERS, WATCHERS AND INCIDENTALS RELATED THERETO.

6. NO FULL DEPTH BRIDGE REPAIR SHALL BE PERFORMED OVER AN OPEN LANE. A SAFETY NET OR PLATFORM SHALL BE REQUIRED TO PROTECT THE ROADWAY, RAILROAD, BIKE PATH OR STREAM DURING THE REMOVAL OF THE EXISTING CONCRETE PARAPET AND DECK. THE CONTRACTOR SHALL PROVIDE A SAFETY NET OR PLATFORM OF SUITABLE STRENGTH ON THE UNDERSIDE OF THE DECK. THE DESIGN OF THE NET OR PLATFORM SHALL CONFORM WITH OSHA REQUIREMENTS AND THE APPROVAL OF THE ENGINEER AND SHALL REMAIN IN PLACE UNTIL THE WORK HAS BEEN COMPLETED AND ACCEPTED OR AS DIRECTED BY THE ENGINEER. THE CONTRACTOR SHALL SUBMIT A DEMOLITION PLAN AND SAFETY NET OR PLATFORM DESIGN 10 DAYS PRIOR TO COMMENCING ANY DEMOLITION FOR APPROVAL BY THE ENGINEER. THE SUBMITTAL SHALL BE IN WRITING TO THE DISTRICT CONSTRUCTION ENGINEER WITH A COPY TO THE PROJECT ENGINEER.

7. UNDER NO CIRCUMSTANCES SHALL THE CONTRACTOR BE PERMITTED TO HAVE SUCCESSIVE WORK ZONES UNLESS THE DISTANCE BETWEEN THE DRUMS, BARRICADES OR CONES EXCEEDS TWO (2) MILES RURAL OR ONE (1) MILE URBAN.

8. ONLY DURING OFF-PEAK PERIODS (ie. ANY PERIOD OTHER THAN 6-8 AM AND 3-6PM) SHALL THE CONTRACTOR INSTALL AND SUBSEQUENTLY RESET ALL TRAFFIC CONTROL NECESSARY FOR THE WORK ZONE FOR EACH CONSTRUCTION PHASE.

9. THE EXISTING PAVEMENT MARKINGS SHOWN WERE OBTAINED FROM A COMBINATION OF FIELD SURVEY, RECORD PLAN INFORMATION AND FIELD MEASUREMENT. THE CONTRACTOR SHALL FIELD VERIFY THE EXISTING CONDITIONS PRIOR TO PERFORMING ANY MODIFICATIONS TO THE EXISTING PAVEMENT MARKINGS.

10. ALTHOUGH ESTIMATES FOR TEMPORARY EXCAVATION, EMBANKMENT AND TEMPORARY DRAINAGE FACILITIES MAY BE SHOWN ON THE PLAN DETAILS, THESE ITEMS SHALL BE CONSIDERED INCIDENTAL TO, AND INCLUDED WITH THE LUMP SUM PAYMENT FOR ITEM 614 - MAINTAINING TRAFFIC, AS PER PLAN.

FOR QUANTITIES, SEE SHEET NO. ___.

MAINTENANCE OF TRAFFIC SIGNAL/ FLASHER INSTALLATION

BEFORE ANY WORK IS STARTED REPRESENTATIVES OF THE STATE, THE MAINTAINING AGENCY, AND THE CONTRACTOR SHALL MAKE A VISUAL INSPECTION OF THE EXISTING SIGNAL/FLASHER INSTALLATIONS TO BE MAINTAINED. DURING THIS INSPECTION A WRITTEN RECORD OF THE CONDITION OF THE EXISTING SIGNAL/FLASHER SHALL BE MADE BY THE STATE'S REPRESENTATIVE. THIS WRITTEN REPORT SHALL NOTE INDIVIDUAL ITEMS WHICH ARE NOT IN WORKING ORDER. THE COMPLETED REPORT SHALL BE SIGNED BY THE REPRESENTATIVES OF THE STATE, THE MAINTAINING AGENCY, AND THE CONTRACTOR.

AFTER THE REPORT HAS BEEN SIGNED BY ALL PARTIES, THE SIGNAL INSTALLATION SHALL BE TURNED OVER TO THE CONTRACTOR, WHO SHALL THEN BE REQUIRED TO MAINTAIN THE TRAFFIC SIGNAL INSTALLATIONS WITHIN THE PROJECT UNDER THE FOLLOWING CONDITIONS:

A) EXISTING SIGNAL/FLASHER INSTALLATIONS WHICH THE PLANS REQUIRE THE CONTRACTOR TO ADJUST, MODIFY, ADD ONTO OR REMOVE, OR WHICH THE CONTRACTOR ACTUALLY ADJUSTS, MODIFIES OR OTHERWISE DISTURBS INCLUDING DAMAGE DUE TO UTILITY RELOCATION. THE CONTRACTOR SHALL BE RESPONSIBLE FOR THE ENTIRE INSTALLATION AT AN INTERSECTION FROM THE TIME THE INSTALLATION IS FIRST DISTURBED, WHETHER FROM UTILITY WORK OR FROM THE CONTRACTOR UNTIL THE INSTALLATION HAS BEEN SUBSEQUENTLY REMOVED OR MODIFIED AND THE WORK IS ACCEPTED.

B) NEW OR REUSED SIGNAL/FLASHER INSTALLATIONS OR DEVICES, INSTALLED BY THE CONTRACTOR. THE CONTRACTOR SHALL BE RESPONSIBLE FOR MAINTENANCE OF THESE FROM THE TIME OF INSTALLATION UNTIL THE WORK IS ACCEPTED.

THE CONTRACTOR SHALL CORRECT AS QUICKLY AS POSSIBLE ALL OUTAGES OR MALFUNCTIONS. AT THE PRE-CONSTRUCTION MEETING, THE CONTRACTOR SHALL PROVIDE THE MAINTAINING AGENCY AND THE PROJECT ENGINEER SUCH ADDRESSES AND PHONE NUMBERS WHERE HIS MAINTENANCE FORCES CAN BE CONTACTED. THE CONTRACTOR SHALL PROVIDE ONE OR MORE PERSONS TO RECEIVE ALL CALLS AND DISPATCH THE NECESSARY MAINTENANCE FORCES TO CORRECT OUTAGES. SUCH A PERSON OR PERSONS MAY BE USED TO PERFORM OTHER DUTIES AS LONG AS PROMPT ATTENTION IS GIVEN TO THESE CALLS AND A PERSON IS READILY AVAILABLE CONTINUOUSLY 24 HOURS A DAY, 7 DAYS A WEEK. THE CONTRACTOR SHALL HAVE THE MALFUNCTION CORRECTED AND/OR REPAIRED TO THE SATISFACTION OF THE ENGINEER WITHIN EIGHT HOURS OF THE NOTIFICATION OR LIQUIDATED DAMAGES OF $500 PER HOUR SHALL BE ASSESSED THE CONTRACTOR.

ALL LAMP OUTAGES, CABLE OUTAGES, ELECTRICAL FAILURES, EQUIPMENT MALFUNCTIONS AND MISALIGNED SIGNAL HEADS SHALL BE CORRECTED TO THE SATISFACTION OF THE PROJECT ENGINEER WITH THE SIGNAL BACK IN SERVICE WITHIN FOUR HOURS AFTER THE CONTRACTOR HAS BEEN NOTIFIED OF THE OUTAGES.

IN THE EVENT NEW SIGNALS ARE DAMAGED PRIOR TO ACCEPTANCE ALL DAMAGED EQUIPMENT EXCEPT POLES AND CONTROL EQUIPMENT SHALL BE REPLACED BY THE CONTRACTOR TO THE SATISFACTION OF THE PROJECT ENGINEER WITH THE SIGNAL BACK IN SERVICE WITHIN EIGHT HOURS AFTER THE CONTRACTOR IS NOTIFIED OF THE OUTAGE.

IF POLES AND/OR CONTROL EQUIPMENT ARE DAMAGED AND MUST BE REPLACED, THE CONTRACTOR SHALL MAKE TEMPORARY REPAIRS AS NECESSARY TO BRING THE SIGNAL BACK INTO FULL OPERATION WITHIN THE ALLOWED EIGHT HOUR PERIOD, AND SHALL MAKE PERMANENT REPAIRS OR REPLACEMENT AS SOON AS POSSIBLE.

NONE OF THE ABOVE SHALL BE CONSTRUED AS COLLECTIVE OR CONSECUTIVE OUTAGE TIME PERIODS AT ANY ONE LOCATION. WHERE MORE THAN ONE OUTAGE OCCURS AT ANY ONE LOCATION, THEN THE ALLOTTED TIME LIMIT SHALL BE FOR THE WORST SINGLE OUTAGE.

WHERE OUTAGES ARE THE DIRECT RESULT OF A VEHICLE ACCIDENT THE RESPONSE OF THE CONTRACTOR SHALL BE AS OUTLINED ABOVE. THE CONTRACTOR SHALL BE RESPONSIBLE FOR COLLECTION OF ANY DAMAGES FOR THIS WORK FROM THOSE PARTIES RESPONSIBLE FOR THE DAMAGES AS PER 107.16.

WHERE THE CONTRACTOR HAS FAILED TO OR CANNOT RESPOND TO AN OUTAGE OR SIGNAL EQUIPMENT MALFUNCTION, AT THESE LOCATIONS WITHIN HIS RESPONSIBILITY, WITHIN PERIODS AS SPECIFIED ABOVE, THE PROJECT ENGINEER MAY INVOKE THE PROVISIONS OF SECTION 105.15 AND ANY SUBSEQUENT BILLINGS TO THE STATE OR THE CITY OF MASSILLON FOR POLICE SERVICES AND MAINTENANCE SERVICES BY STATE OR CITY FORCES SHALL BE DEDUCTED FROM MONEYS DUE OR TO BECOME DUE THE CONTRACTOR IN ACCORDANCE WITH PROVISIONS OF SECTION 105.15. IN ADDITION TO THESE BILLINGS, THE CONTRACTOR SHALL BE ASSESSED LIQUIDATED DAMAGES OF $500/HOUR FOR EACH HOUR BEYOND THE ALLOWED EIGHT HOUR PERIOD THAT THE SIGNAL IS INOPERATIVE.

THE CONTRACTOR SHALL PROVIDE THE MAINTENANCE SERVICES ENTIRELY WITH HIS FORCES OR HE MAY CHOOSE TO ENTER INTO A MUTUALLY ACCEPTABLE AGREEMENT WITH THE LOCAL MAINTAINING AGENCY TO PROVIDE THE MAINTENANCE.

THE CONTRACTOR SHALL INFORM THE PROJECT ENGINEER, IN WRITING, OF THE MAINTENANCE METHOD SELECTED.

THE CONTRACTOR SHALL BE RESPONSIBLE FOR ANY DAMAGE DUE TO ANY TRAFFIC SIGNAL COMPONENTS REQUIRED TO BE HANDLED DURING THE RELOCATION OF POLES AND REVISIONS TO THE SIGNAL SYSTEM.

WHEN A TRAFFIC SIGNAL MUST BE TAKEN OUT OF SERVICE BY THE CONTRACTOR, DUE TO CONSTRUCTION PROCEDURES, THIS OUTAGE SHALL NOT EXCEED FOUR HOURS AND SHALL NOT INCLUDE THE HOURS OF 6:00AM TO 8:00AM AND 4:00PM TO 6:00PM. ANY SIGNALIZED INTERSECTION, WHERE THE SIGNAL IS OUT OF SERVICE DUE TO CONSTRUCTION PROCEDURES, OR DUE TO AN OUTAGE OR MALFUNCTION OF EQUIPMENT AS DESCRIBED ABOVE, SHALL BE PROTECTED, BY THE CONTRACTOR, BY THE INSTALLATION OF TEMPORARY "STOP" SIGNS, EXCEPT FOR THE FOLLOWING INTERSECTIONS WHICH SHALL BE PROTECTED BY OFF-DUTY POLICE, HIRED BY THE CONTRACTOR.

1. S.R. 21/ LAKE AVENUE
2. LAKE AVENUE/ ERIE STREET

ANY VEHICULAR TRAFFIC SIGNAL HEAD, EITHER NEW OR EXISTING WHICH WILL BE OUT OF OPERATION SHALL BE COVERED, AS DESCRIBED IN 632.24.

THE CONTRACTOR SHALL MAINTAIN COMPLETE RECORDS OF MALFUNCTIONS INCLUDING: 1. TIME OF NOTIFICATION OF MALFUNCTION; 2. TIME OF WORK CREWS ARRIVAL TO CORRECT THE MALFUNCTION; 3. ACTIONS TAKEN TO CORRECT THE MALFUNCTION, INCLUDING A LIST OF PARTS REPAIRED OR REPLACED; 4. A DIAGNOSIS OF REASON FOR THE MALFUNCTION AND PROBABILITY OF REOCCURRENCE; AND 5. TIME OF COMPLETION OF REPAIR AND SYSTEM RESTORED TO FULL SERVICE. A COPY OF THESE RECORDS SHALL BE PROVIDED TO THE ENGINEER WITHIN THREE (3) WORKING DAYS FOLLOWING COMPLETION OF EACH REPAIR.

ALL COSTS RESULTING FROM THE ABOVE REQUIREMENTS SHALL BE CONSIDERED TO BE INCLUDED TO AND INCLUDED IN THE LUMP SUM PRICE BID FOR ITEM 614 - MAINTAINING TRAFFIC.

ITEM 615 - PAVEMENT FOR MAINTAINING TRAFFIC, CLASS A, AS PER PLAN

IN ADDITION TO THE REQUIREMENTS OF 615, THIS ITEM REPLACES THE 7 INCHES OF ITEM 301 BITUMINOUS AGGREGATE BASE WITH 9 INCHES OF ITEM 301 BITUMINOUS AGGREGATE BASE.

ON THIS PROJECT THE CLASS A PAVEMENT FOR MAINTAINING TRAFFIC SHALL BE 18 FEET WIDE AND THE ROADWAY WIDTH SHALL NOT BE LESS THEN 22 FEET OUT TO OUT OF SHOULDERS. THE EXISTING PAVEMENT/ SHOULDER SHALL BE SAWCUT AS PER 203.04(E).

THE FOLLOWING ESTIMATED QUANTITIES HAVE BEEN INCLUDED IN THE GENERAL SUMMARY TO BE USED IN CONSTRUCTING THE PAVEMENT FOR MAINTAINING TRAFFIC, CLASS A, AS PER PLAN.

ITEM 615 - PAVEMENT FOR MAINTAINING TRAFFIC, CLASS A, AS PER PLAN ___ S.Y.
ITEM 411 - STABILIZED CRUSHED AGGREGATE ___ CU. YD.

UPON COMPLETION OF THE PROJECT, THE CONTRACTOR SHALL REMOVE THE PAVEMENT FOR MAINTAINING TRAFFIC INCLUDING ANY TEMPORARY DRAINAGE FACILITIES. THE AFFECTED EXISTING EARTH MEDIAN AND PAVED SHOULDERS SHALL BE RESTORED TO THEIR ORIGINAL CONDITION AS DIRECTED BY THE ENGINEER AND AS PER 615.08.

PAVEMENT FOR MAINTAINING TRAFFIC SHALL NOT BE OPENED TO TRAFFIC UNTIL ALL WORK ZONE TRAFFIC CONTROL DEVICES, SIGNS, PAVEMENT MARKINGS AND PORTABLE CONCRETE BARRIERS HAVE BEEN ERECTED AND APPROVED BY THE ENGINEER.

ALTHOUGH ESTIMATES FOR TEMPORARY EXCAVATION, EMBANKMENT AND TEMPORARY DRAINAGE FACILITIES MAY BE SHOWN ON THE PLAN DETAILS, THESE ITEMS SHALL BE CONSIDERED INCIDENTAL TO, AND INCLUDED WITH PAYMENT FOR ITEM 614 MAINTAINING TRAFFIC.

CALCULATED LOB CHECKED MAH

GPD ASSOCIATES

MAINTENANCE OF TRAFFIC GENERAL NOTES

STA-21-12.48

2 / 48

8 / 115

I:\PROJECTS\2006\2086-0007 STA-21-12.48 PART 2\CIVIL\DRAWINGS\MOT\GPD STAGE 2 DGNS 7-27-06\STAGE 1 ELECTRONIC SUBMITTAL\2543NM002.DGN
7/31/2006
7:54:53 AM
USER#

CONSTRUCTION ACCESS POINTS

CONSTRUCTION ACCESS POINT LOCATIONS MAY BE SELECTED BY THE CONTRACTOR, WITH THE APPROVAL OF THE ENGINEER. THEY SHALL BE IN ACCORDANCE WITH THE DETAILS IN THE PLANS. THE LOCATIONS SHALL BE SELECTED FOR GOOD SIGHT DISTANCE AND EASE OF ACCESS FOR ENTERING VEHICLES. AVOID LOCATIONS JUST BEYOND CREST VERTICAL CURVES ON CURVES TO THE SIDE OF THE ROAD WITH THE BARRIER, JUST BEYOND OVERHEAD STRUCTURES, UPGRADES, ETC. IN THE EVENT THAT THE ENGINEER DETERMINES THAT THE ACCESS POINT DOES NOT FUNCTION IN A SAFE MANNER, HE SHALL ORDER IT IMMEDIATELY CLOSED AT NO ADDITIONAL COST TO THE STATE. ACCESS POINTS, WHICH INCLUDE THE SECONDARY OPENING, SHALL ALSO INCLUDE AN OPERABLE IMPACT ATTENUATOR AS DETAILED. WHEN AN IMPACT ATTENUATOR BECOMES INOPERABLE FOR ANY REASON, THE ENGINEER SHALL ORDER THE SECONDARY OPENING TO BE IMMEDIATELY CLOSED WITH PORTABLE CONCRETE BARRIER. ACCESS POINTS MAY BE RELOCATED SUBJECT TO THE APPROVAL OF THE ENGINEER, AS NECESSARY TO ACCOMPLISH CONSTRUCTION ACTIVITIES.

ALL COST FOR RELOCATION OF PORTABLE CONCRETE BARRIER, INSTALLATION, REPAIR, REPLACEMENT, AND REMOVAL OF IMPACT ATTENUATORS, GRADING FOR ACCESS DRIVES, AND RELATED COSTS ARE INCLUDED IN THE LUMP SUM BID PRICE FOR ITEM 614 - MAINTAINING TRAFFIC.

FLOODLIGHTING

FLOODLIGHING OF THE WORK SITE FOR OPERATIONS CONDUCTED DURING NIGHT TIME PERIODS SHALL BE ACCOMPLISHED SO THAT THE LIGHTS DO NOT CAUSE GLARE TO THE DRIVERS ON THE ROADWAY. TO ENSURE THE ADEQUACY OF THE FLOODLIGHT PLACEMENT, THE CONTRACTOR AND THE ENGINEER SHALL DRIVE THROUGH THE WORK SITE EACH NIGHT WHEN THE LIGHTING IS IN PLACE AND THE PLACEMENT AND SHIELDING SHALL BE ADJUSTED TO THE SATISFACTION OF THE ENGINEER BEFORE WORK PROCEEDS. FLOODLIGHTING PLACEMENT SHALL ALSO BE SUCH THAT IT DOES NOT IMPACT ANY RESIDENTIAL PROPERTIES WITHIN OR NEAR THE CONSTRUCTION ZONE.

PAYMENT FOR ALL LABOR, EQUIPMENT AND MATERIALS SHALL BE INCLUDED IN THE LUMP SUM CONTRACT PRICE FOR ITEM 614 - MAINTAINING TRAFFIC.

PAYMENT FOR DUST CONTROL

THE CONTRACTOR SHALL SUPPLY WATER FOR DUST CONTROL AS DIRECTED BY THE ENGINEER. THE FOLLOWING CONTINGENCY QUANTITY HAS BEEN INCLUDED FOR DUST CONTROL PURPOSES:

ITEM 616 - WATER - ___ M GAL

ITEM 614 - REPLACEMENT SIGN

FLATSHEET SIGNS FURNISHED BY THE CONTRACTOR IN ACCORDANCE WITH THE REQUIREMENTS OF THE PLANS, SPECIFICATIONS AND PROPOSAL WHICH BECOME DAMAGED BY TRAFFIC FOR REASONS BEYOND THE CONTROL OF THE CONTRACTOR SHALL BE REPLACED IN KIND WHEN ORDERED BY THE ENGINEER. REPLACEMENT SIGNS SHALL BE NEW. OTHER MATERIALS MAY BE IN USED, BUT GOOD, CONDITION SUBJECT TO APPROVAL BY THE ENGINEER.

PAYMENT FOR THE NEW SIGNS SHALL BE MADE AT THE CONTRACT PRICE PER SQUARE FOOT FOR ITEM 614, REPLACEMENT SIGN, AND SHALL INCLUDE THE COST OF REMOVING AND DISPOSING OF DAMAGED SIGNS, HARDWARE AND SUPPORTS, AND PROVIDING THE NECESSARY REPLACEMENT HARDWARE, SUPPORTS, ETC.

AN ESTIMATED QUANTITY OF ___ SQUARE FEET HAS BEEN PROVIDED IN THE GENERAL SUMMARY.

ITEM 614 - REPLACEMENT DRUM

DRUMS FURNISHED BY THE CONTRACTOR IN ACCORDANCE WITH THE REQUIREMENTS OF THE PLANS, SPECIFICATIONS AND PROPOSAL WHICH BECOME DAMAGED BY TRAFFIC FOR REASONS BEYOND THE CONTROL OF THE CONTRACTOR SHALL BE REPLACED IN KIND WHEN ORDERED BY THE ENGINEER. REPLACEMENT DRUMS SHALL BE NEW.

PAYMENT FOR THE NEW DRUMS SHALL BE MADE AT THE CONTRACT PRICE PER EACH FOR ITEM 614, REPLACEMENT DRUM, AND SHALL INCLUDE THE COST OF REMOVING AND DISPOSING OF THE DAMAGED DRUM, AND PROVIDING AND MAINTAINING THE REPLACEMENT DRUM IN ACCORDANCE WITH THE CONTRACT REQUIREMENTS FOR THE ORIGINAL DRUM.

AN ESTIMATED QUANTITY OF ___ EACH HAS BEEN PROVIDED IN THE GENERAL SUMMARY.

ITEM 614 - WORK ZONE INCREASED PENALTIES SIGN (R11-H5A)

R11-H5A-48 SIGNS SHALL BE FURNISHED, ERECTED, AND MAINTAINED IN GOOD CONDITION AND/OR REPLACED AS NECESSARY AND SUBSEQUENTLY REMOVED BY THE CONTRACTOR. SIGNS SHALL BE MOUNTED AT THE APPROPRIATE OFFSETS AND ELEVATIONS AS PRESCRIBED BY THE OHIO MANUAL OF UNIFORM TRAFFIC CONTROL DEVICES. THEY SHALL BE MAINTAINED ON SUPPORTS MEETING CURRENT SAFETY CRITERIA.

THE SIGNS MAY BE ERECTED OR UNCOVERED NO MORE THAN FOUR HOURS BEFORE THE ACTUAL START OF WORK. THE SIGNS SHALL BE REMOVED OR COVERED NO LATER THAN FOUR HOURS FOLLOWING RESTORATION OF ALL LANES TO TRAFFIC WITH NO RESTRICTIONS, OR SOONER AS DIRECTED BY THE ENGINEER. TEMPORARY SIGN COVERING AND UNCOVERING DUE TO TEMPORARY LANE RESTORATIONS SHALL BE GUIDED BY THE FOUR-HOUR LIMITATIONS STATED ABOVE. SUCH LANE RESTORATIONS SHOULD BE EXPECTED TO REMAIN IN EFFECT FOR 30 OR MORE CONSECUTIVE CALENDAR DAYS, SUCH AS DURING WINTER SHUTDOWNS.

(THE SIGNS SHALL BE DUAL MOUNTED. THE FIRST SIGN SHALL BE PLACED BETWEEN THE ROAD WORK AHEAD (W20-1)SIGN AND THE NEXT SIGN IN THE SEQUENCE. SIGNS SHALL BE ERECTED ON EACH ENTRANCE RAMP AND EVERY 1 MILE THROUGH THE CONSTRUCTION WORK LIMITS.)

THE CONTRACTOR MAY USE SIGNS AND SUPPORTS IN USED, BUT GOOD, CONDITION PROVIDED THE SIGNS MEET CURRENT ODOT SPECIFICATIONS. SIGN FACES SHALL BE REFLECTORIZED WITH TYPE G SHEETING COMPLYING WITH THE REQUIREMENTS OF CMS 730.19.

WORK ZONE INCREASED PENALITIES SIGNS AND SUPPORTS WILL BE MEASURED AS THE NUMBER OF SIGN INSTALLATIONS, INCLUDING THE SIGN AND NECESSARY SUPPORTS. IF A SIGN AND SUPPORT COMBINATION IS REMOVED AND REERECTED AT ANOTHER LOCATION AS DIRECTED BY THE ENGINEER, IT SHALL BE CONSIDERED ANOTHER UNIT.

PAYMENT FOR ACCEPTED QUANTITIES, COMPLETE, IN PLACE WILL BE MADE AT THE CONTRACT UNIT PRICE. PAYMENT SHALL BE FULL COMPENSATION FOR ALL MATERIALS, LABOR, INCIDENTALS AND EQUIPMENT FOR FURNISHING, ERECTING, MAINTAINING, COVERING DURING SUSPENSION OF WORK AND REMOVAL OF THE SIGN AND SUPPORT.

ITEM 614 - WORK ZONE INCREASED PENALITIES SIGN ___ EACH

EARTHWORK FOR MAINTAINING TRAFFIC

THE FOLLOWING QUANTITIES HAVE BEEN INCLUDED IN THE PLAN FOR INFORMATION ONLY:

EXCAVATION FOR MAINTAINING TRAFFIC ___ CU. YD.
EMBANKMENT FOR MAINTAINING TRAFFIC ___ CU. YD.

ITEM 614 - WORK ZONE CROSSOVER LIGHTING SYSTEM

THIS WORK SHALL CONSIST OF FURNISHING, ERECTING, OPERATING, MAINTAINING AND REMOVING A WORK ZONE LIGHTING SYSTEM FOR A SINGLE CROSSOVER, OR OVERLAPPING A PAIR OF CROSSOVERS ON A TWO-LANE, TWO-WAY OPERATION. THE SYSTEM SHALL BE AS SHOWN ON SCD MT-100.00. THE CONTRACTOR SHALL ARRANGE FOR AND PAY FOR POWER. ALL MATERIALS AND CONSTRUCTION SHALL COMPLY WITH APPLICABLE PORTIONS OF 625 AND 725 EXCEPT: THE PERFORMANCE TEST OF 625.19F, AND CERTIFIED DRAWING REQUIREMENT OF 625.04, ARE WAIVED AND USED MATERIALS IN GOOD CONDITION ARE ACCEPTABLE.

POLES MAY BE LESS THAN 30 FT FROM THE EDGE OF PAVEMENT WHEN BEHIND GUARDRAIL. ADDITIONAL POLE LINES, CABLES AND APPURTENANCES NECESSARY TO FURNISH POWER TO THE LIGHTING SYSTEM SHALL BE INCLUDED IN THIS ITEM. SERVICE POLES SHALL BE POSITIONED WITH THE SAME CONSTRAINTS AS THE LIGHTING POLES AS A MINIMUM.

PAYMENT WILL BE MADE AT THE UNIT PRICE PER EACH FOR ITEM 614, WORK ZONE CROSSOVER LIGHTING SYSTEM THROUGHOUT ALL PHASES OF WORK WHEN THE CROSSOVER ROADWAYS ARE USED.

TRAFFIC CONTROL INSPECTOR

THE CONTRACTOR SHALL DESIGNATE AN INDIVIDUAL OTHER THAN THE SUPERINTENDENT AND SUBJECT TO THE APPROVAL OF THE ENGINEER, TO CONTINUOUSLY INSPECT ALL TRAFFIC CONTROL DEVICES WHENEVER CONSTRUCTION WORK IS BEING PERFORMED WITHIN THE WORK LIMITS OF THE PROJECT. THE DESIGNATED INDIVIDUAL SHALL ALSO INSPECT ALL TRAFFIC DEVICES AT THE BEGINNING AND AT THE END OF EACH WORK DAY. THE DESIGNATED INDIVIDUAL OR A QUALIFIED RESPENTATIVE SHALL ALSO BE AVAILABLE ON AN AROUND THE CLOCK BASIS TO REPAIR AND/OR REPLACE DAMAGED OR MISSING TRAFFIC CONTROL DEVICES. THESE INDIVIDUALS SHALL BE EQUIPPED WITH CELLULAR PHONES AND THEIR NAMES AND PHONE NUMBERS SHALL BE GIVEN TO THE PROJECT ENGINEER AT THE PRE-CONSTRUCTION MEETING. THE DESIGNATED INDIVIDUAL MAY HAVE OTHER CONSTRUCTION RELATED DUTIES AS LONG AS IMMEDIATE ATTENTION IS GIVEN TO TRAFFIC CONTROL. PAYMENT FOR THE SERVICES OF THE TRAFFIC CONTROL INSPECTOR SHALL BE INCLUDED IN THE LUMP SUM PRICE BID FOR ITEM 614 MAINTAINING TRAFFIC.

CALCULATED LOB | CHECKED MAH

GPD ASSOCIATES

MAINTENANCE OF TRAFFIC GENERAL NOTES

STA-21-12.48

H:\PROJECTS\2006\2006-0807 STA-21-12.48 PART 2\CIVIL\DRAWINGS\MOT\GPD STAGE 2 DGNS 7-27-06\STAGE 1 ELECTRONIC SUBMITTAL\2543MN003.DGN
7/31/2006
7:54:58 AM
USER#

ITEM 614 - WORKZONE IMPACT ATTENUATOR, (UNIDIRECTIONAL)

THIS ITEM SHALL CONSIST OF FURNISHING AND INSTALLING EITHER OF THE FOLLOWING IMPACT ATTENUATORS:

1. *THE QUADGUARD CZ, (24" WIDE 6-BAY) TEMPORARY IMPACT ATTENUATOR MANUFACTURED BY ENERGY ABSORPTION SYSTEMS, INC., ONE EAST WACKER DRIVE, CHICAGO, IL 60601 (TELEPHONE: 312-467-6750).*

   THE LENGTH OF THE 6-BAY QUADGUARD CZ IS 20.75 FT. INSTALLATION SHALL BE AT THE LOCATIONS SPECIFIED IN THE PLANS, IN ACCORDANCE WITH THE MANUFACTURER'S SPECIFICATIONS AS DETAILED ON THE FOLLOWING PRE-APPROVED SHOP DRAWINGS:

DWG NO.	DRAWING NAME	DWG./REV. DATE	ODOT APPROVAL DATE
QSCZCVR-T4	QUADGUARD CZ SYSTEM FOR CONSTRUCTION ZONES	5/13/99 REV. J	8/27/99
35-40-10	QUADGUARD SYSTEM CONCRETE PAD, CZ, QG	11/19/97 REV. D	8/27/99
35-40-16	QUADGUARD SYSTEM BACKUP ASSEMBLY, CZ, QG,	7/30/99 REV. F	8/27/99
354051Z	QUADGUARD CZ SYSTEM NOSE ASSEMBLY, CZ, QG, 24, 30, 36	5/17/99	8/27/99
35-40-18	TRANSITION ASSEMBLY, 4 OFFSET, QG	6/25/99 REV. F	8/27/99
3540260	QUADGUARD SYSTEM PCMB ANCHOR ASSEMBLY	11/19/97 REV. C	8/27/99

2. *THE TRACC (TRINITY ATTENUATING CRASH CUSHION) MANUFACTURED BY SYRO INC., 1170 N. STATE STREET, GIRARD, OHIO 44420 (TELEPHONE: 330-545-4373).*

   THE TRACC IS 21 FT LONG AND 2.62 FT WIDE. INSTALLATION SHALL BE AT THE LOCATIONS SPECIFIED IN THE PLANS, IN ACCORDANCE WITH THE MANUFACTURER'S SPECIFICATIONS AS DETAILED ON THE FOLLOWING PRE-APPROVED SHOP DRAWINGS:

DWG NO.	DRAWING NAME	DWG./REV.	ODOT APPROVAL DATE
SS450M	CRASH-CUSHION ATTENUATING TERMINAL PLAN, ELEVATION & SECTIONS	3/12/99 REV. 1	8/27/99
SS455	TRACC TRANSITION TO W-BEAM MEDIAN BARRIER PLAN, ELEVATION & SECTIONS	2/18/99	8/27/99
SS461	TRACC TRANSITION TO CONCRETE SAFETY SHAPE BARRIER PLAN, ELEVATION & SECTIONS	6/30/99 REV. 1	8/27/99
SS462	TRACC TRANSITION TO CONCRETE BARRIER SINGLE SLOPE PLAN, ELEVATION & SECTIONS	6/30/99	8/27/99

THE CONTRACTOR SHALL PROVIDE A REPLACEMENT UNIT WHEN AN IMPACT IS SEVERE ENOUGH TO REQUIRE COMPLETE REPLACEMENT OF THE ATTENUATOR. THE CONTRACTOR SHALL HAVE A SPARE PARTS PACKAGE AVAILABLE ON THE PROJECT SITE AT ALL TIMES WHEN AN ATTENUATOR IS IN PLACE. THE CONTRACTOR SHALL PROVIDE A MINIMUM OF ONE COMPLETE SPARE PARTS PACKAGE FOR EVERY 1 TO 6 UNITS INSTALLED ON THE PROJECT SITE. FOR EXAMPLE, 5 INSTALLED UNITS REQUIRE 1 SPARE PARTS PACKAGE AND 7 INSTALLED UNITS REQUIRE 2 SPARE PARTS PACKAGES.

PAYMENT FOR THE ABOVE WORK SHALL BE MADE AT THE UNIT PRICE BID FOR ITEM 614, TEMPORARY IMPACT ATTENUATOR, (UNIDIRECTIONAL), EACH, AND SHALL INCLUDE ALL LABOR, TOOLS, EQUIPMENT AND MATERIALS NECESSARY TO CONSTRUCT, MAINTAIN, REPAIR, REPLACE OR RELOCATE A COMPLETE AND FUNCTIONAL IMPACT ATTENUATOR SYSTEM, INCLUDING ALL RELATED BACKUPS, TRANSITIONS, LEVELING PADS, HARDWARE AND GRADING, NOT SEPARATELY SPECIFIED, AS REQUIRED BY THE MANUFACTURER.

CALCULATED LOB CHECKED MAH

GPD ASSOCIATES

MAINTENANCE OF TRAFFIC GENERAL NOTES

STA-21-12.48

H:\PROJECTS\2006\2006-0807 STA-21-12.48 PART 2\CIVIL\DRAWINGS\MOT\GPD STAGE 2 DGNS 7-27-06\STAGE 1 ELECTRONIC SUBMITTAL\2543MN004.DGN
7/31/2006
7:54:48 AM
USER#

CONTRACTOR'S EQUIPMENT - OPERATION AND STORAGE

A QUALIFIED FLAGGER SHALL BE EMPLOYED WHERE THE CONTRACTOR'S EQUIPMENT MUST MERGE WITH THE TRAFFIC STREAM. THE CONTRACTOR'S EQUIPMENT SHALL BE EQUIPPED WITH AT LEAST ONE AMBER FLASHING LIGHT. PAVERS, ROLLERS AND OTHER EQUIPMENT MAY BE PARKED IN AREAS ALONG THE HIGHWAY WHEN PAVING OPERATIONS ARE SCHEDULED TO CONTINUE WITHIN THE NEXT WORKDAY. OTHERWISE THE EQUIPMENT SHALL BE STORED AT A STORAGE AREA OUTSIDE THE R/W, THE LOCATION OF WHICH SHALL HAVE PRIOR APPROVAL OF THE ENGINEER. WHEN PARKING ALONG THE HIGHWAY THE EQUIPMENT SHALL BE PLACED AND DELINEATED AS PER 614.03A. NO EQUIPMENT SHALL BE PARKED IN THE MEDIAN OF THE HIGHWAY. ADEQUATE BARRICADES AND LIGHTS SHALL BE PLACED ON THE PAVEMENT SIDE OF THE EQUIPMENT TO IDENTIFY THE LIMITS OF THE EQUIPMENT. ALL OTHER EQUIPMENT, INCLUDING PRIVATE VEHICLES, SHALL BE STORED AT THE APPROVED CONTRACTOR'S STORAGE AREA. NO EQUIPMENT SHALL BE PARKED ON PRIVATE PROPERTY UNLESS PRIOR APPROVAL OF THE OWNER AND THE PROJECT ENGINEER/SUPERVISOR HAS BEEN GRANTED.

ITEM 622 - PORTABLE CONCRETE BARRIER, 50", AS PER PLAN

THIS WORK SHALL CONSIST OF FURNISHING, INSTALLING, MAINTAINING, AND SUBSEQUENTLY REMOVING A 50 INCH PORTABLE CONCRETE BARRIER AT THE LOCATIONS SHOWN ON THE PLANS. FOR DETAILS SEE SCD RM-4.1.

PORTABLE CONCRETE BARRIER, 32 INCHES HIGH WITH AN 18 INCH MINIMUM HEIGHT GLARE SCREEN MAYBE USED AT THE OPTION OF THE CONTRACTOR. THE GLARE SCREEN SHALL BE CONSTRUCTED USING ONE OF THE FOLLOWING SYSTEMS OR AN APPROVED EQUAL.

CARSONITE MODULAR GLARE SCREEN
CARSONITE INTERNATIONAL
605 BOB GIFFORD BLVD.
EARLY BRANCH, SOUTH CAROLINA 29916
PHONE: (702)-833-5104
OR 800-648-7974

TRINITY GLAREFOIL
TRINITY INDUSTRY
1170 N. STATE ST.
GIRARD, OHIO 44420
PHONE: (330)-545-4373

PADDLE OR INTERMITTENT TYPE GLARE SCREENS SHALL BE DESIGNED USING A 20 DEGREE CUT-OFF ANGLE BASED ON TANGENT ALIGNMENT. THAT SPACING SHALL BE USED THROUGHOUT THE BARRIER WITHOUT REGARD TO BARRIER CURVATURE.

THE GLARE SCREEN SYSTEM SHALL BE SECURELY FASTENED TO THE 32-INCH PORTABLE CONCRETE BARRIER USING THE HARDWARE AND PROCEDURES SPECIFIED BY THE MANUFACTURER.

PAYMENT SHALL INCLUDE ALL LABOR, MATERIAL, AND EQUIPMENT NECESSARY TO PERFORM THE THE WORK AND SHALL BE PAID FOR AT THE CONTRACT PRICE PER FOOT FOR ITEM 622, PORTABLE CONCRETE BARRIER, 50 INCH, AS PER PLAN.

MAINTENANCE OF CANOE TRAFFIC

CANOE AND PIKE PATH TRAFFIC SHALL BE MAINTAINED THROUGHOUT CONSTRUCTION OF THE PROJECT EITHER THROUGH EXISTING RIVER CHANNEL OR THROUGH PORTAGE TRAIL APPROVED BY THE ENGINEER.

BIKE PATH TRAFFIC SHALL BE MAINTAINED THROUGHOUT CONSTRUCTION OF THE PROJECT THROUGH THE USE OF A SUSPENDED PLATFORM OR "TUNNEL" TYPE STRUCTURE TO PROTECT THE BIKE PATH FROM FALLING DEBRIS.

ADEQUATE SIGNING BOTH UPSTREAM AND DOWNSTREAM SHALL BE INSTALLED AND MAINTAINED BY THE CONTRACTOR. THE FOLLOWING TYPE SIGNS ARE CONSIDERED TO BE MINIMUM TREATMENT.

1. APPROXIMATELY ONE-QUARTER MILE UPSTREAM, ADVANCED WARNING TYPE SIGNS ON BOTH BANKS.
2. APPROXIMATELY 300 FEET UPSTREAM, SIGNS SPECIFYING ACTIONS REQUIRED OF CANOEIST ON BOTH BANKS.
3. APPROXIMATELY ONE-QUARTER MILE DOWNSTREAM, ADVANCE WARNING TYPE SIGNS ON BOTH BANKS.
4. APPROXIMATELY 300 FEET DOWNSTREAM, SIGNS SPECIFYING ACTIONS REQUIRED OF CANOEIST ON BOTH BANKS.

THE ABOVE SIGNING SHALL BE MOUNTED IN SUCH A WAY AS TO BE A MINIMUM OF 4 FEET ABOVE THE WATER LEVEL, UNOBSTRUCTED BY TREE BRANCHES, AND PROPERLY ANGLED FOR MAXIMUM VISIBILITY FROM THE MAIN CLEAR CHANNEL. THE METHOD OF SUPPORTING THE SIGNS SHALL BE APPROVED BY THE ENGINEER PRIOR TO INSTALLATION. UPON COMPLETION OF THE PROJECT, THE SIGNS AND SUPPORT SYSTEMS SHALL BE COMPLETELY REMOVED FROM THE RIVER CHANNEL. THE CONTRACTOR SHALL NOTIFY LOCAL CANOE LIVERIES USING THIS PORTION OF THE RIVER AT LEAST 10 DAYS PRIOR TO ANY CHANGES AFFECTING CANOE TRAFFIC.

PORTAGE TRAILS IF USED SHALL BE CONSTRUCTED AND MAINTAINED BY THE CONTRACTOR WITH THE LEAST POSSIBLE DISTURBANCE TO THE SURROUNDING AREA. THE TRAIL SHALL BE ADEQUATELY MARKED IN BOTH DIRECTIONS. THE CONTRACTOR SHALL BE RESPONSIBLE FOR OBTAINING THE RIGHT-OF-WAY FOR THE PORTAGE TRAILS IF REQUIRED.

IN THE EVENT PIPES ARE USED TO DIVERT OR CARRY RIVER WATER, BOTH THE INLET AND OUTLET ENDS SHALL BE ADEQUATELY PROTECTED BY GRATES OR FENCE SO THAT PEOPLE OR CANOES ARE NOT DRAWN THROUGH OR HELD BY THEM.

ADVANCED WARNING SIGNAGE SHALL BE ERECTED ALONG THE OHIO & ERIE CANAL TOWPATH TRAIL, WARNING TRAIL USERS OF THE CONSTRUCTION AREA AHEAD. ALL WARNING SIGNS SHALL BE DUAL MOUNTED ON BOTH SIDES OF THE BIKE PATH FACING ONCOMING TRAFFIC, ON BOTH APPROACHES TO THE PROJECT LIMITS. THE FOLLOWING SIGN INSTALLATIONS ARE CONSIDERED TO BE THE MINIMUM ACCEPTABLE TREATMENT.

1. APPROXIMATELY 1000 FEET PRIOR TO THE PROJECT LIMITS, THE CONTRACTOR SHALL ERRECT W20-1-30 "ROAD WORK AHEAD" SIGNS.

2. APPROXIMATELY 500 FEET PRIOR TO THE PROJECT . LIMITS, THE CONTRACTOR SHALL ERRECT W5-4A-18 "BIKEWAY NARROWS" SIGNS.

3. APPROXIMATELY 500 FEET AFTER PASSING THROUGH THE PROJECT, THE CONTRACTOR SHALL ERRECT G20-2-48 "END ROAD WORK" SIGNS.

THE ABOVE LISTED SIGNS SHALL BE MOUNTED TO ALLOW CLEAR UNOBSTRUCTED VIEW BY ONCOMING TRAIL USERS WITH THE METHOD OF SUPPORT AND INSTALLATION LOCATION APPROVED BY THE ENGINEER. UPON COMPLETION OF THE PROJECT, THE SIGNS AND SUPPORTS SHALL BE COMPLETELY REMOVED FROM THE TRAIL RIGHT OF WAY.

MAINTENANCE OF CANOE TRAFFIC (CONT.)

THE CONTRACTOR SHALL ALSO INSTALL SAFETY FENCING ALONG THE TRAIL RIGHT OF WAY TO PREVENT TRAIL USERS FROM LEAVING THE TRAIL SURFACE AND ENTERING THE CONSTRUCTION AREA. THE FENCING MATERIAL UTILIZED SHALL BE OF A CONSTRUCTION, WHICH WILL MINIMIZE INJURY TO TRAIL USERS. SELECTION OF FENCING TYPE SHALL BE APPROVED BY THE ENGINEER PRIOR TO INSTALLATION. THE CONTRACTOR SHALL LAYOUT THE PROPOSED FENCE LOCATION IN THE FIELD FOR APPROVAL BY THE ENGINEER PRIOR TO INSTALLATION.

ALL COSTS ASSOCIATED WITH MAINTAING CANOE AND BIKE PATH TRAFFIC SHALL BE INCLUDED IN THE LUMP SUM BID PRICE FOR ITEM 614 - MAINTAING TRAFFIC, MISC.; MAINTENANCE OF CANOE AND BIKE PATH TRAFFIC.

ITEM 614 - WORK ZONE RAISED PAVEMENT MARKER, AS PER PLAN

WORK ZONE RAISED PAVEMENT MARKERS, AS PER PLAN, AND THEIR INSTALLATION SHALL CONFORM TO CMS 614 OR CMS 621 AS SPECIFIED HEREIN.

RAISED PAVEMENT MARKERS IN USE DURING THE SNOW-PLOWING SEASON SHALL CONFORM TO 621.

RAISED PAVEMENT MARKERS IN USE DURING NON-SNOW-PLOW SEASON SHALL CONFORM TO EITHER 614 OR TO 621.

THE SNOW-PLOWING SEASON SHALL RUN FROM ___ THROUGH _____.

IF PROJECT DELAYS, NOT THE FAULT OF ODOT, CAUSE THE WORK TO EXTEND INTO THE SNOW-PLOWING SEASON, THE CONTRACTOR SHALL BE RESPONSIBLE FOR REPLACING WORK ZONE RAISED PAVEMENT MARKERS (WZRPMS) CONFORMING TO CMS 614, WITH RAISED PAVEMENT MARKERS CONFORMING TO 621, AS DETERMINED BY THE ENGINEER, AT THE CONTRACTOR'S EXPENSE.

THIS ITEM SHALL INCLUDE PURCHASE, INSTALLATION AND REMOVAL OF ITEM 614 WORK ZONE RAISED PAVEMENT MARKER, AS PER PLAN, INCLUDING FILLING OF ANY DEPRESSIONS CREATED IN THE PAVEMENT AS PER CMS 202.10.

AN ESTIMATED QUANTITY OF ___ EACH OF ITEM 614 WORK ZONE RAISED PAVEMENT MARKER, AS PER PLAN HAS BEEN PROVIDED AND CARRIED TO THE GENERAL SUMMARY.

WORK ZONE RAISED PAVMENT MARKERS ON CONCRETE SURFACES

RAISED PAVEMENT MARKERS IN WORK ZONES, INSTALLED ON TO CONCRETE SURFACES, SHALL BE ITEM 614 WORK ZONE RAISED PAVEMENT MARKERS. WZRPMS ARE INTENDED FOR USE ONLY DURING THE NON-SNOW-PLOWING SEASON. WZRPMS SHALL NOT BE PROVIDED DURING THE SNOW-PLOWING SEASON.

THE SNOW-PLOWING SEASON SHALL RUN FROM ___ THROUGH ___.

WHERE A TEMPORARY ALIGNMENT WILL REMAIN IN USE THROUGH THE WINTER, THE WZRPMS SHALL BE REMOVED PRIOR TO THE BEGINNING OF THE SNOW-PLOWING SEASON AND REPLACED APPROXIMATELY APRIL 1, OR AS OTHERWISE DETERMINED BY THE ENGINEER.

THIS ITEM SHALL INCLUDE PURCHASE, INSTALLATION AND REMOVAL OF ITEM 614 WORK ZONE RAISED PAVEMENT MARKERS.

AN ESTIMATED QUANTITY OF ___ EACH OF ITEM 614 WORK ZONE RAISED PAVEMENT MARKER HAS BEEN PROVIDED AND CARRIED TO THE GENERAL SUMMARY.

ITEM 614 - LINEAR DELINEATION, AS PER PLAN

3M SCOTCHLITE LINEAR DELINEATION SYSTEM (LDS) SHALL BE INSTALLED ON ALL CONCRETE BARRIER, PERMANENT OR TEMPORARY, LOCATED WITHIN 5 FEET OF THE EDGE OF THE TRAVEL LANE UNDER EITHER OF THE FOLLOWING CONDITIONS:

ALONG TAPERS AND TRANSITION AREAS

ALONG CURVES WITH DEGREE OF CURVATURE GREATER THAN OR EQUAL TO 3 DEGREES

ITEM 614, LINEAR DELINEATION, AS PER PLAN (CONT.)

THE LDS SHALL CONSISTS OF PANELS OF DELINEATION, APPROXIMATELY 34 INCHES LONG AND 6 INCHES WIDE. PANELS SHALL BE PROVIDED AT THE RATE OF ONE PER SECTION OF PORTABLE CONCRETE BARRIER OR ONE PANEL EVERY 10 FEET, SPACED ALONG THE LENGTH OF THE RUN. THE PANELS SHALL BE MOUNTED SUCH THAT THE TOPS OF THE PANELS ARE 26 INCHES FROM THE BASE OF THE CONCRETE BARRIER

PAYMENT SHALL BE FULL COMPENSATION FOR ALL MATERIAL, LABOR, INCIDENTALS AND EQUIPMENT NECESSARY FOR FURNISHING, INSTALLING, MAINTAINING AND REMOVING 3M SCOTCHLITE LINEAR DELINEATION SYSTEM (LDS).

AN ESTIMATED QUANTITY OF ___ LINEAR FEET OF ITEM 614 - LINEAR DELINEATION, AS PER PLAN HAS BEEN PROVIDED AND CARRIED TO THE GENERAL SUMMARY. ALONG RUNS OF CONCRETE BARRIER WHERE THIS ITEM IS PROVIDED, THE QUANTITY SHALL BE MEASURED AS THE ENTIRE LENGTH OF THE RUN BEING DELINEATED, INCLUDING THE SPACES BETWEEN THE INDIVIDUAL PANELS.

CONCRETE BARRIER DELINEATION

OBJECT MARKERS SHALL BE INSTALLED ON ALL CONCRETE BARRIER, PERMANENT AND/OR TEMPORARY, 32 INCHES OR LESS IN HEIGHT, LOCATED WITHIN 5 FEET OF THE EDGE OF THE ADJACENT TRAVEL LANE. OBJECT MARKER SPACING SHALL BE 50 FEET.

PAYMENT SHALL BE FULL COMPENSATION FOR ALL MATERIAL, LABOR, INCIDENTALS AND EQUIPMENT NECESSARY FOR FURNISHING, INSTALLING, MAINTAINING AND REMOVING OBJECT MARKERS.

AN ESTIMATED QUANTITY OF ___ EACH OF ITEM 614 OBJECT MARKER, ONE-WAY HAS BEEN PROVIDED AND CARRIED TO THE GENERAL SUMMARY.

GUARDRAIL DELINEATION

OBJECT MARKERS SHALL BE INSTALLED ON ALL GUARDRAIL LOCATED WITHIN 5 FEET OF THE EDGE OF THE ADJACENT TRAVEL LANE. GUARDRAIL-MOUNTING OF OBJECT MARKERS SHALL BE MADE BY INSTALLING THE OBJECT MARKERS ON THE EXTENSION BLOCKS RATHER THAN DIRECTLY ONTO THE GUARDRAIL ITSELF. OBJECT MARKER SPACING SHALL BE APPROXIMATELY 50 FEET.

PAYMENT SHALL BE FULL COMPENSATION FOR ALL MATERIAL, LABOR, INCIDENTALS AND EQUIPMENT NECESSARY FOR FURNISHING, INSTALLING, MAINTAINING AND REMOVING OBJECT MARKERS.

AN ESTIMATED QUANTITY OF ___ EACH OF ITEM 614 - OBJECT MAKERS, ONE-WAY HAS BEEN PROVIDED AND CARRIED TO THE GENERAL SUMMARY.

COVERING OF SIGNS

WHERE THE PLANS CALL FOR A PERMANENT SIGN TO BE OVERLAYED, THE CONTRACTOR SHALL DO SO IN SUCH A MANNER AS TO AVOID DAMAGING THE PERMANENT SIGN WHEN THE OVERLAY IS REMOVED. THE OVERLAY SHALL BE TOTALLY OPAQUE. THE USE OF ADHESIVE TAPE APPLIED DIRECTLY TO SIGN FACE IS STRICTLY PROHIBITED. THE OVERLAYS MAY BE RIVETED TO THE PERMANENT SIGN. THE CONTRACTOR SHALL PROVIDE ALL OF THE PLAQUES, SIGNS AND SIGN PANELS NECESSARY.

CALCULATED LOB CHECKED MAH

GPD ASSOCIATES

MAINTENANCE OF TRAFFIC GENERAL NOTES

STA-21-12.48

5 / 48

11 / 115

H:\PROJECTS\2006\2006-0007 STA-21-12.48 PART 2\CIVIL\DRAWINGS\MOT\GPD STAGE 2 DGNS 7-27-06\STAGE 1 ELECTRONIC SUBMITTAL\25439N#05.DGN
7/31/2006
7:54:46 AM
USER#

MAINTENANCE OF TRAFFIC - CONSTRUCTION PHASE 2
SCHEMATIC PLAN

GPD ASSOCIATES

CALCULATED LOB
CHECKED MAH

0 50 100 200
HORIZONTAL SCALE IN FEET

STA-21-12.48

6 / 48

12 / 115

\\AKRNAS1\DATA\CIVIL\208485A\00\DGN\MOT\MPA.DGN
7/27/2006
4:46:49 PM
SWARRECCHIA-AKRON

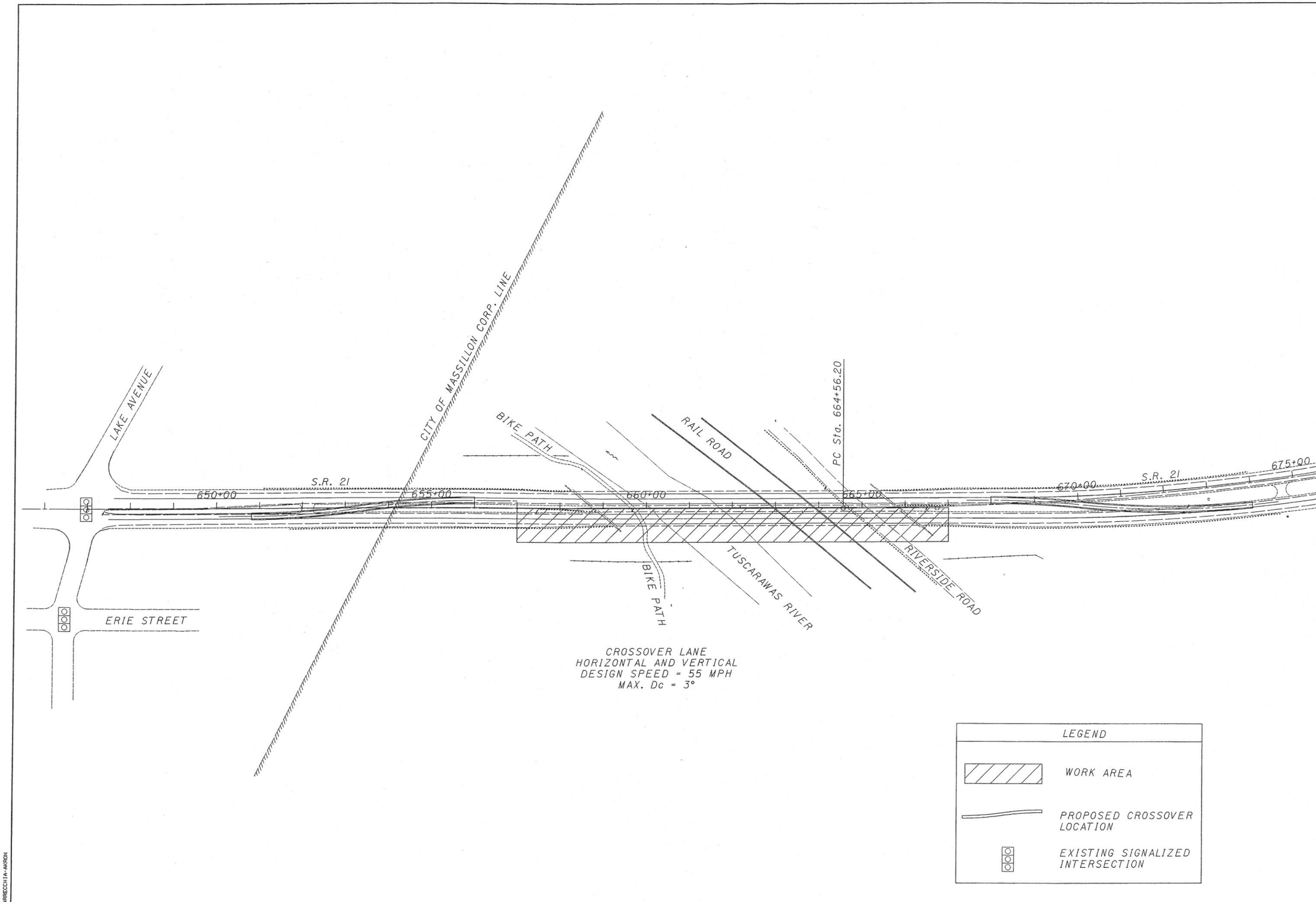

0 50 100 200
HORIZONTAL SCALE IN FEET

CALCULATED LOB
CHECKED MAH

GPD ASSOCIATES

MAINTENANCE OF TRAFFIC - CONSTRUCTION PHASE 3
SCHEMATIC PLAN

STA-21-12.48

7/48

13/115

\\AKRN01\DATA\CIVIL\2004054\00\DGN\MOT\MPB.DGN
7/27/2006
4:47:02 PM
$VARRECCHIA-AKRON

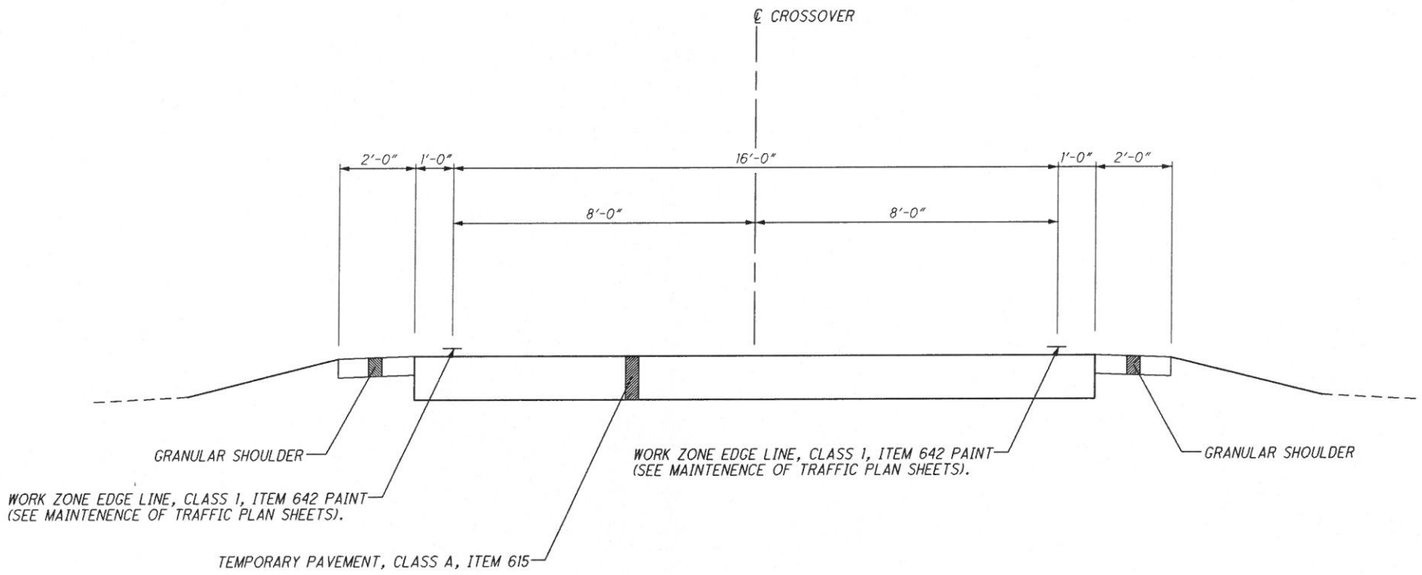

MAINTENANCE OF TRAFFIC TYPICAL SECTION - CROSSOVERS 1, 2, 3, & 4

NOT TO SCALE

CALCULATED LOB
CHECKED MAH

GPD ASSOCIATES

MAINTENANCE OF TRAFFIC TYPICAL SECTION
CROSSOVERS

STA-21-12.48

8/48

14/115

\PROJECTS\2006\2006-0007 STA-21-12.48 PART 2\CIVIL\DRAWINGS\MOT\GPD STAGE 2 DGNS 7-27-06\STAGE 1 ELECTRONIC SUBMITTAL\25433MD003.DGN
/31/2006
:54:43 AM
USER#

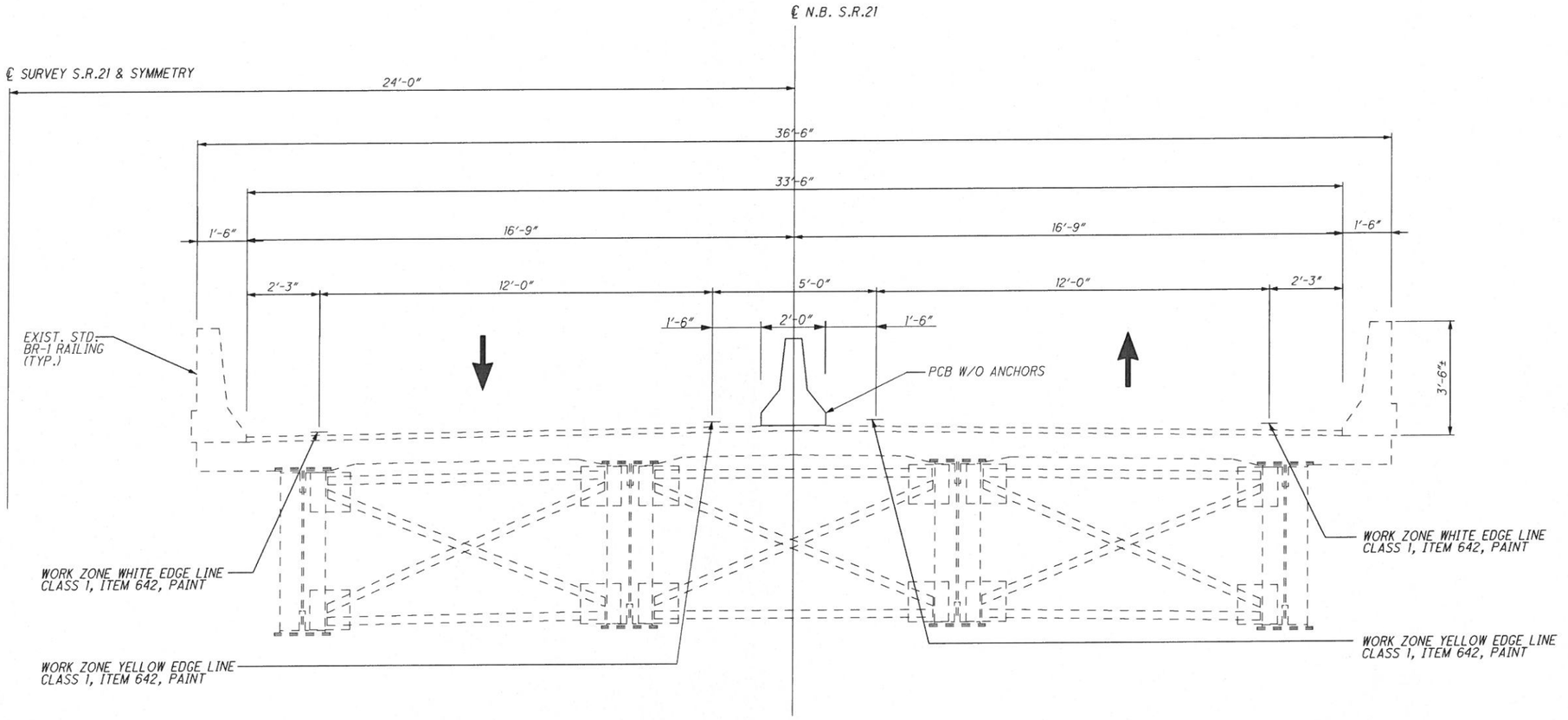

MAINTENANCE OF TRAFFIC TRANSVERSE SECTION

CONSTRUCTION PHASE 2, STA-21-1248R
S.R. 21 NORTHBOUND
N.T.S.

\\PROJECTS\2006\2006-0007 STA-21-12.48 PART 2\CIVIL\DRAWINGS\MOT\GPD STAGE 2 DGNS 7-27-06\STAGE 1 ELECTRONIC SUBMITTAL\25433M0001.DGN
7/31/2006
9:54:43 AM
USER#

CALCULATED LOB
CHECKED MAH

GPD ASSOCIATES

MAINTENANCE OF TRAFFIC TRANSVERSE SECTION - CONSTRUCTION PHASE 2
BRIDGE NO. STA-21-1238R, US 21 OVER TUSCARAWAS RIVER
PENNA. R.R., B & O R.R. AND T.R. 353

STA-21-12.48

9/48

15/115

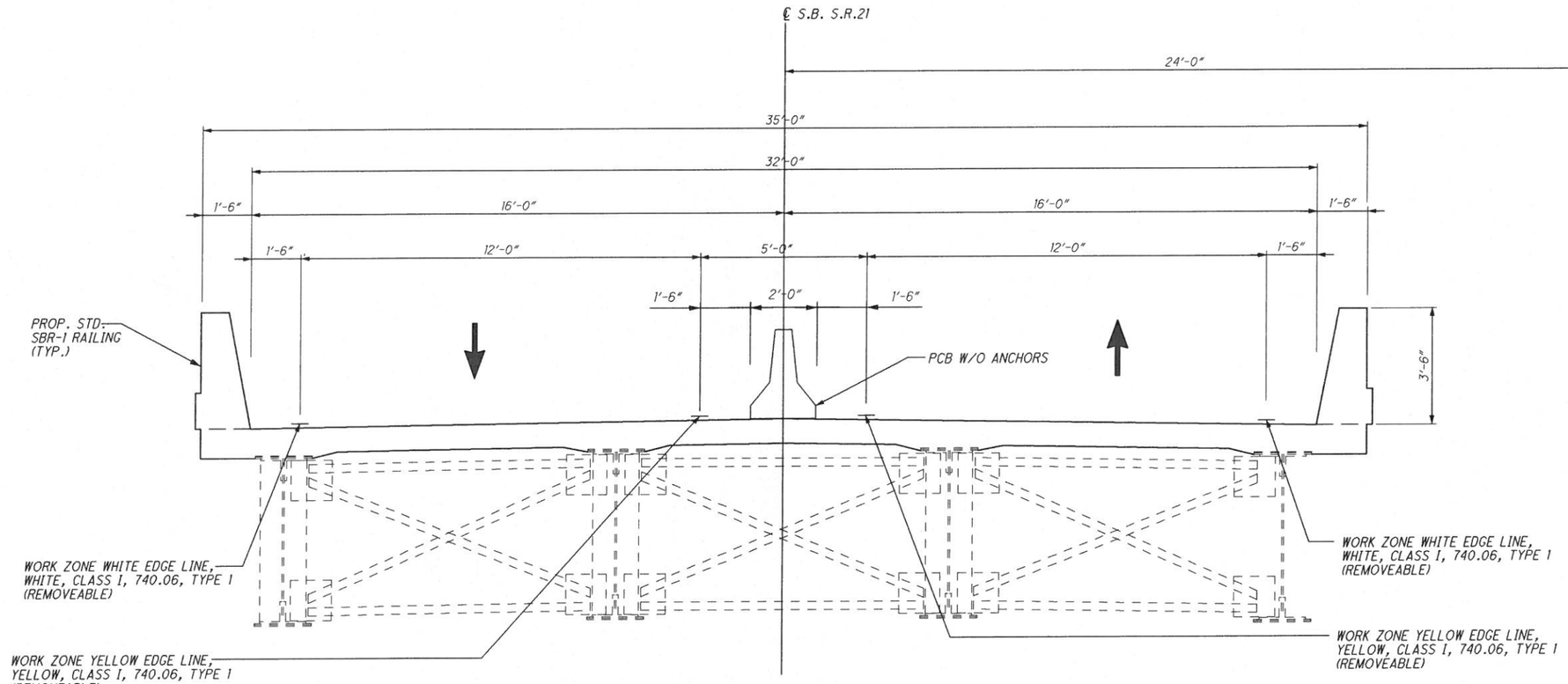

MAINTENANCE OF TRAFFIC TRANSVERSE SECTION

CONSTRUCTION PHASE 3, STA-21-1248L
S.R. 21 SOUTHBOUND
N.T.S.

CALCULATED LOB | CHECKED MAH

GPD ASSOCIATES

MAINTENANCE OF TRAFFIC TRANSVERSE SECTION - CONSTRUCTION PHASE 3
BRIDGE NO. STA 21 - 1238L, US 21 OVER TUSCARAWAS RIVER
PENNA, R.R., B&O R.R. AND T.R. 353

STA-21-12.48

10 / 48

16 / 115

\PROJECTS\2005\2005-0087 STA-21-12.48 PART 2\CIVIL\DRAWINGS\MOT\GPD STAGE 2 DGNS 7-27-06\STAGE 1 ELECTRONIC SUBMITTAL\2543MOT02.DGN
7/31/2006
1:54:42 AM
USER#

TRAFFIC SIGNAL CONTROL TIMING CHART
INTERSECTION: S.R. 21/ LAKE AVE.
MAINTAINING AGENCY: CITY OF MASSILON

START UP
START IN: Y/R FLASH: ● ALL RED ○
TIME FOR FLASH OR ALL READ 5.
FIRST PHASE(S): (2+6)
COLOR DISPLAYED: GREEN

Dual Entry ●
Rest in Red: Ring 1: ○ Ring 2: ○

Overlap / Phases	A	B	C	D

	Controller Movement No.							
INTERVAL OF FEATURE	1	2	3	4	5	6	7	8
INTERSECTION MOVEMENT	↰	→	↲	↑	↱	←	↰	↓
MINIMUM GREEN TIME (SEC.)								
PASSAGE TIME (SEC.)								
MAXIMUM GREEN TIME (SEC.)	6.0	17.0		16.0	6.0	17.0	11.0	16.0
YELLOW CHANGE (SEC.)	3.0	4.0		4.0	3.0	4.0	3.0	4.0
ALL READ CLEARANCE (SEC.)	1.0	2.0		2.0	1.0	2.0	1.0	2.0
WALK (MIN.) (SEC.)								
PEDESTRIAN CLEARANCE (SEC.)								
RECALL — MAXIMUM (ON/OFF)								
RECALL — MINIMUM (ON/OFF)								
RECALL — PEDESTRIAN (ON/OFF)								

CONSTRUCTION TEMPORARY SIGNAL TIMING
PROGRAM #1

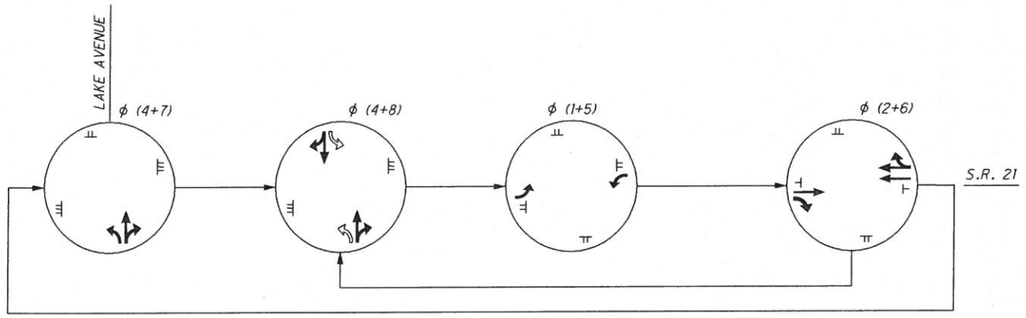

TEMPORARY PHASING DIAGRAM
S.R. 21 / LAKE AVE. INTERSECTION
PROGRAM #1

TRAFFIC SIGNAL CONTROL TIMING CHART
INTERSECTION: S.R. 21/ LAKE AVENUE
MAINTAINING AGENCY: CITY OF MASSILON

START UP
START IN: Y/R FLASH: ● ALL RED ○
TIME FOR FLASH OR ALL READ 5.
FIRST PHASE(S): (2+6)
COLOR DISPLAYED: GREEN

Dual Entry ●
Rest in Red: Ring 1: ○ Ring 2: ○

Overlap / Phases	A	B	C	D

	Controller Movement No.							
INTERVAL OF FEATURE	1	2	3	4	5	6	7	8
INTERSECTION MOVEMENT	↰	→	↲	↑	↱	←	↰	↓
MINIMUM GREEN TIME (SEC.)								
PASSAGE TIME (SEC.)								
MAXIMUM GREEN TIME (SEC.)	11.0	34.0		17.0	11.0	12.0	12.0	17.0
YELLOW CHANGE (SEC.)	3.0	4.0		4.0	3.0	4.0	3.0	4.0
ALL READ CLEARANCE (SEC.)	1.0	2.0		2.0	1.0	2.0	1.0	2.0
WALK (MIN.) (SEC.)								
PEDESTRIAN CLEARANCE (SEC.)								
RECALL — MAXIMUM (ON/OFF)								
RECALL — MINIMUM (ON/OFF)								
RECALL — PEDESTRIAN (ON/OFF)								

CONSTRUCTION TEMPORARY SIGNAL TIMING
PROGRAM #2

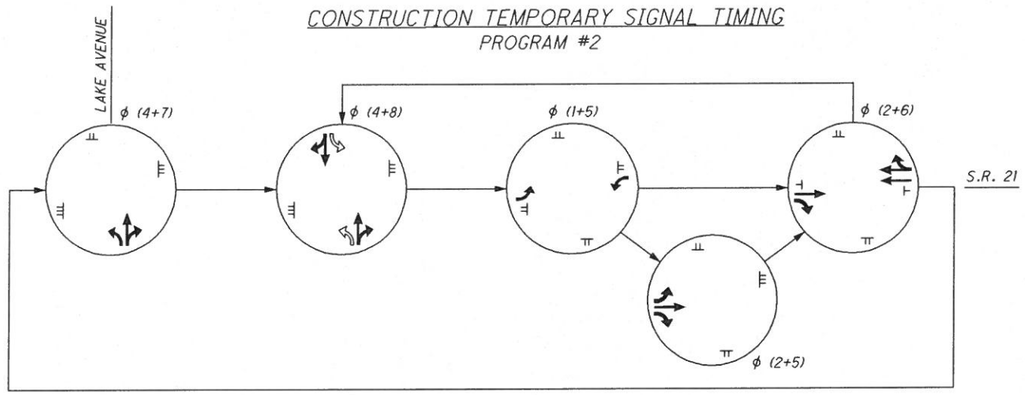

TEMPORARY PHASING DIAGRAM
S.R. 21 / LAKE AVE. INTERSECTION
PROGRAM #2

TEMPORARY TRAFFIC SIGNAL PROGRAM SCHEDULE
INTERSECTION: S.R. 21/ LAKE AVE.
MAINTAINING AGENCY: CITY OF MASSILON

INTERSECTION DESCRIPTION:	NON-MASTER INTERSECTION		
TIME PERIOD	TIME INTERVAL	PROGRAM NUMBER	OFFSET (SEC.)
AM PEAK PERIOD	6:00 AM TO 11:00 AM	#1	MASTER (0 SEC)
NOON PEAK PERIOD	11:00 AM TO 3:00 PM	#1	MASTER (0 SEC)
PM PEAK PERIOD	3:00 PM TO 8:00 PM	#2	MASTER (0 SEC)
OFF PEAK	ALL OTHER TIME PERIODS	FREE	FREE

CALCULATED LOB
CHECKED MAH

GPD ASSOCIATES

MAINTENANCE OF TRAFFIC - TEMPORARY TRAFFIC SIGNAL DETAILS
S.R. 21 / LAKE AVENUE INTERSECTION

STA-21-12.48

11 / 48

17 / 115

I:\PROJECTS\2005\2006-0007 STA-21-12.48 PART 2\CIVIL\DRAWINGS\MOT\GPD STAGE 2 DGNS 7-27-06\STAGE 1 ELECTRONIC SUBMITTAL\25433CD001.DGN
7/31/2006
10:36:35 AM
USER#

TRAFFIC SIGNAL CONTROL TIMING CHART
INTERSECTION: LAKE AVE./ ERIE ST.
MAINTAINING AGENCY: CITY OF MASSILON

START UP
START IN: Y/R FLASH; ● ALL RED ○
TIME FOR FLASH OR ALL READ 5.
FIRST PHASE(S): (2+6)
COLOR DISPLAYED: GREEN

Dual Entry ●
Rest in Red: Ring 1: ○ Ring 2: ○

Overlap	A	B	C	D
Phases				

INTERVAL OF FEATURE	Controller Movement No. 1	2	3	4	5	6	7	8
INTERSECTION MOVEMENT								
MINIMUM GREEN TIME (SEC.)								
PASSAGE TIME (SEC.)								
MAXIMUM GREEN TIME (SEC.)		20.0	7.0	29.0		20.0	7.0	29.0
YELLOW CHANGE (SEC.)		3.0	3.0	3.0		3.0	3.0	3.0
ALL READ CLEARANCE (SEC.)		2.0	1.0	2.0		2.0	1.0	2.0
WALK (MIN.) (SEC.)		7.0		7.0		7.0		7.0
PEDESTRIAN CLEARANCE (SEC.)		11.0		8.0		11.0		8.0
RECALL MAXIMUM (ON/OFF)								
RECALL MINIMUM (ON/OFF)								
RECALL PEDESTRIAN (ON/OFF)								

CONSTRUCTION TEMPORARY SIGNAL TIMING
PROGRAM #1

TRAFFIC SIGNAL CONTROL TIMING CHART
INTERSECTION: LAKE AVE./ ERIE ST.
MAINTAINING AGENCY: CITY OF MASSILON

START UP
START IN: Y/R FLASH; ● ALL RED ○
TIME FOR FLASH OR ALL READ 5.
FIRST PHASE(S): (2+6)
COLOR DISPLAYED: GREEN

Dual Entry ●
Rest in Red: Ring 1: ○ Ring 2: ○

Overlap	A	B	C	D
Phases				

INTERVAL OF FEATURE	Controller Movement No. 1	2	3	4	5	6	7	8
INTERSECTION MOVEMENT								
MINIMUM GREEN TIME (SEC.)								
PASSAGE TIME (SEC.)								
MAXIMUM GREEN TIME (SEC.)		22.0	9.0	35.0		22.0	9.0	35.0
YELLOW CHANGE (SEC.)		3.0	3.0	3.0		3.0	3.0	3.0
ALL READ CLEARANCE (SEC.)		2.0	1.0	2.0		2.0	1.0	2.0
WALK (MIN.) (SEC.)		7.0		7.0		7.0		7.0
PEDESTRIAN CLEARANCE (SEC.)		11.0		8.0		11.0		8.0
RECALL MAXIMUM (ON/OFF)								
RECALL MINIMUM (ON/OFF)								
RECALL PEDESTRIAN (ON/OFF)								

CONSTRUCTION TEMPORARY SIGNAL TIMING
PROGRAM #2

TEMPORARY TRAFFIC SIGNAL PROGRAM SCHEDULE
INTERSECTION: LAKE AVE./ ERIE ST.
MAINTAINING AGENCY: CITY OF MASSILON

INTERSECTION DESCRIPTION:	NON-MASTER INTERSECTION		
TIME PERIOD	TIME INTERVAL	PROGRAM NUMBER	OFFSET (SEC.)
AM PEAK PERIOD	6:00 AM TO 11:00 AM	#1	27
NOON PEAK PERIOD	11:00 AM TO 3:00 PM	#1	63
PM PEAK PERIOD	3:00 PM TO 8:00 PM	#2	73
OFF PEAK	ALL OTHER TIME PERIODS	FREE	FREE

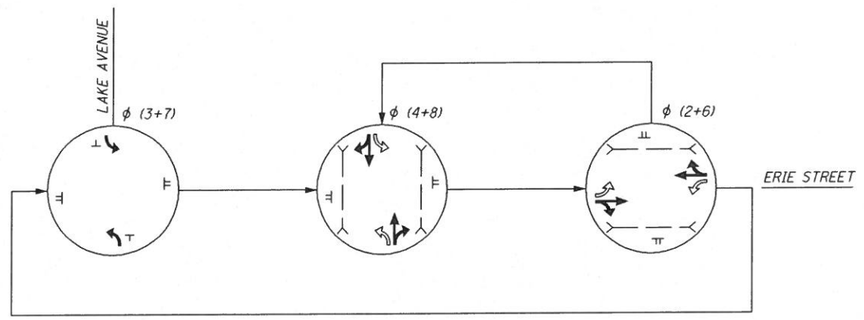

TEMPORARY PHASING DIAGRAM
LAKE AVE. / ERIE ST. INTERSECTION
PROGRAM #1 AND PROGRAM #2

CALCULATED LOB
CHECKED MAH

GPD ASSOCIATES

MAINTENANCE OF TRAFFIC - TEMPORARY TRAFFIC SIGNAL DETAILS
LAKE AVENUE / ERIE STREET INTERSECTION

STA-21-12.48

\PROJECTS\2006\2006-0007 STA-21-12.48 PART 2\CIVIL\DRAWINGS\MOT\GPD STAGE 2 DGNS 7-27-06\STAGE 1 ELECTRONIC SUBMITTAL\25433CD002.DGN
/31/2006
:37:25 AM
USER$

\PROJECTS\2006\2006-0007 STA-21-12_48 PART 2\CIVIL\DRAWINGS\MOT\GPD STAGE 2 DGNS 7-27-06\STAGE 1 ELECTRONIC SUBMITTAL\25433MP001.DGN
/31/2006
:38:35 AM
JSER*

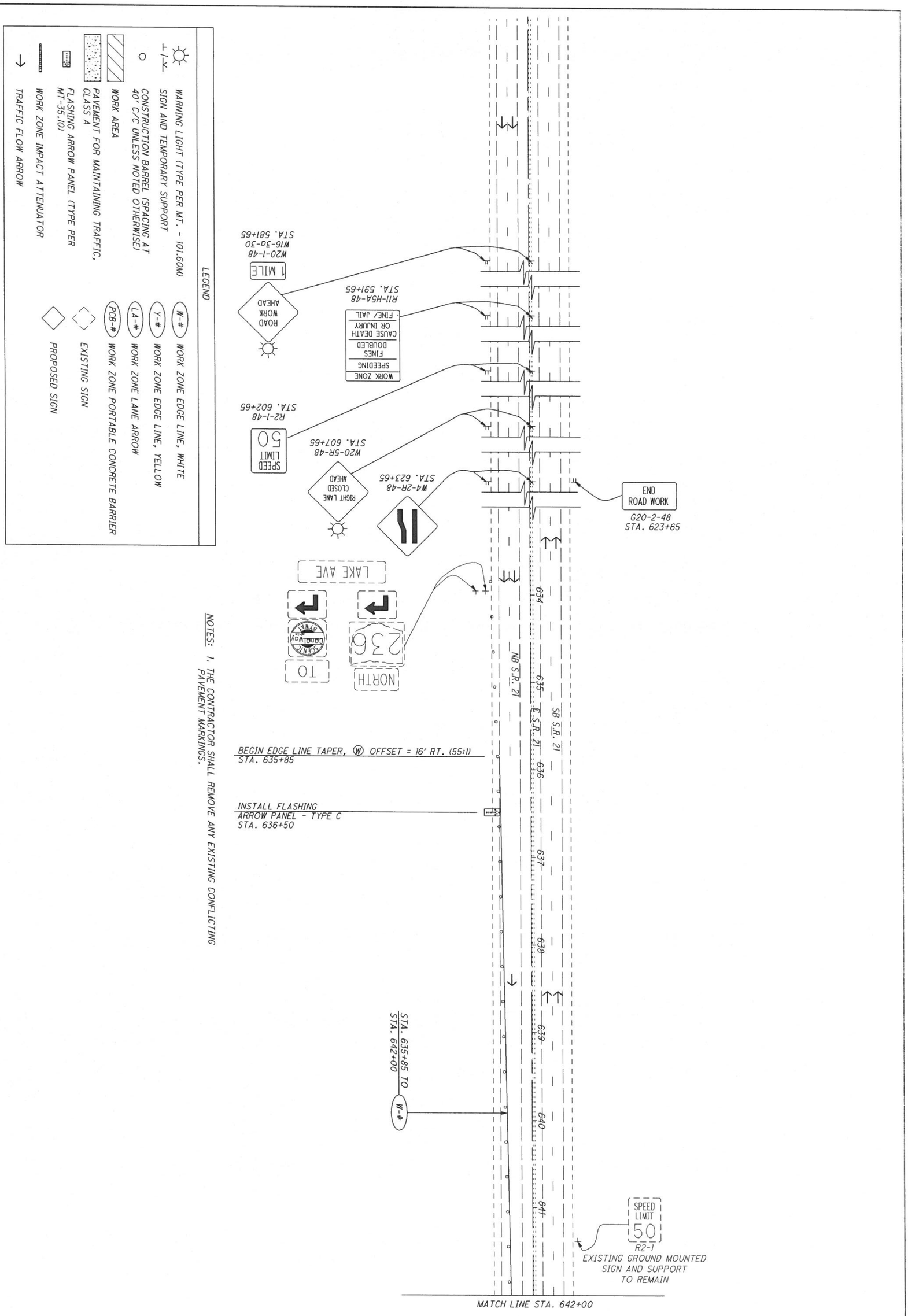

NOTES: 1. THE CONTRACTOR SHALL REMOVE ANY EXISTING CONFLICTING PAVEMENT MARKINGS.

MAINTENANCE OF TRAFFIC - CONSTRUCTION PHASE 2

S.R. 21 - BEGIN TO STA. 642+00

GPD ASSOCIATES

CALCULATED LOB | CHECKED MAH

0 25 50 100 HORIZONTAL SCALE IN FEET

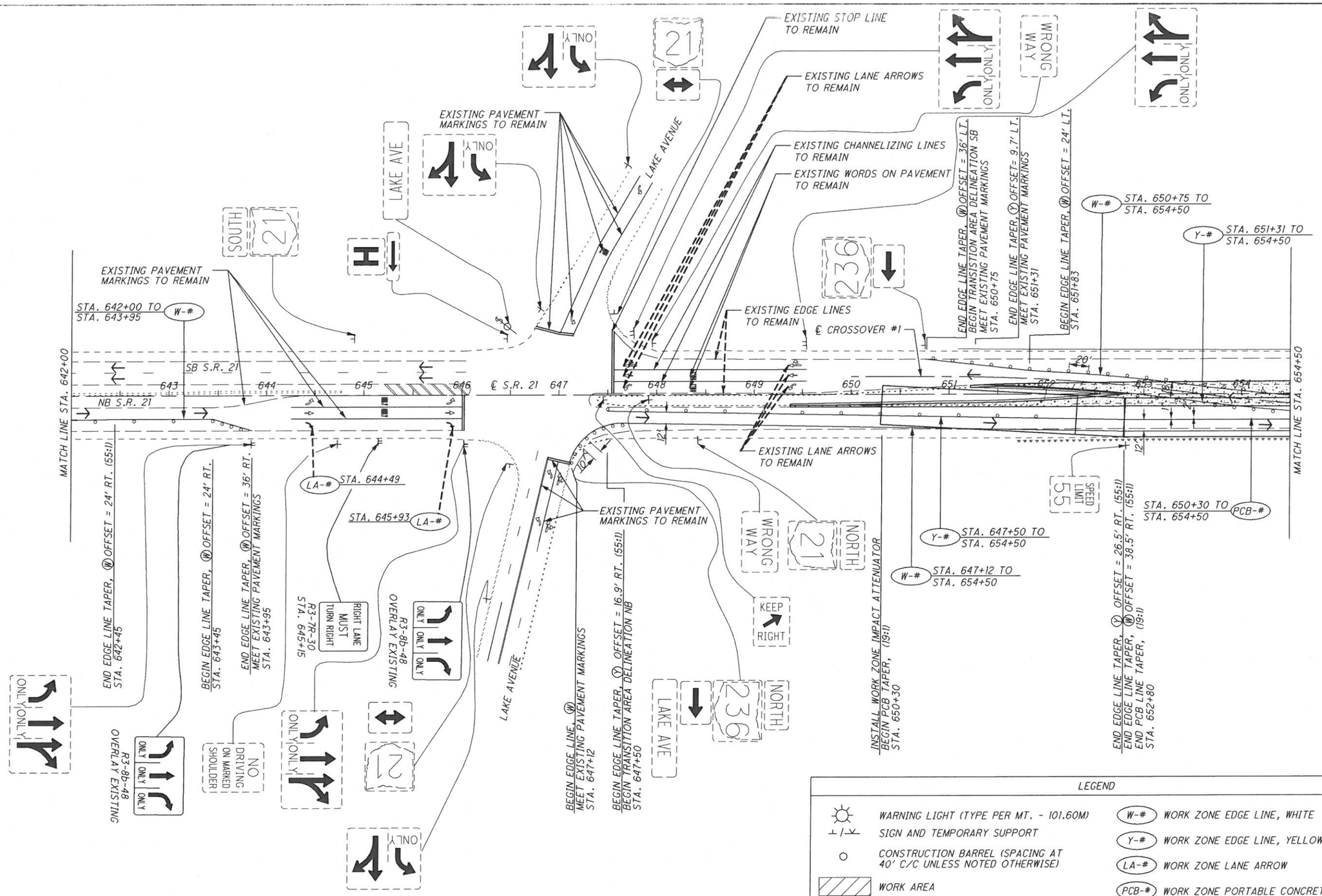

LEGEND

- WARNING LIGHT (TYPE PER MT. - 101.60M)
- SIGN AND TEMPORARY SUPPORT
- CONSTRUCTION BARREL (SPACING AT 40' C/C UNLESS NOTED OTHERWISE)
- WORK AREA
- PAVEMENT FOR MAINTAINING TRAFFIC, CLASS A
- FLASHING ARROW PANEL (TYPE PER MT-35.10)
- WORK ZONE IMPACT ATTENUATOR
- TRAFFIC FLOW ARROW
- W-# WORK ZONE EDGE LINE, WHITE
- Y-# WORK ZONE EDGE LINE, YELLOW
- LA-# WORK ZONE LANE ARROW
- PCB-# WORK ZONE PORTABLE CONCRETE BARRIER
- EXISTING SIGN
- PROPOSED SIGN

NOTES:
1. THE CONTRACTOR SHALL REMOVE ANY EXISTING CONFLICTING PAVEMENT MARKINGS.
2. SEE CROSSOVER PLANS FOR CROSSOVER GEOMETRICS.
3. ANY SIGNS COVERED OR OVERLAYED SHALL BE DONE SO IN A MANNER WHICH DOES NOT DAMAGE THE SIGNS.

HORIZONTAL SCALE IN FEET
0 25 50 100

CALCULATED LOB
CHECKED MAH

GPD ASSOCIATES

MAINTENANCE OF TRAFFIC - CONSTRUCTION PHASE 2
S.R. 21 - STA. 642+00 TO STA. 654+50

STA-21-12.48

14 / 48

20 / 115

\PROJECTS\2006\2006-0007 STA-21-12.48 PART 2\CIVIL\DRAWINGS\MOT\DPD STAGE 2 DGNS 7-27-06\STAGE 1 ELECTRONIC SUBMITTAL\2543MP002.DGN
7/31/2006
1:39:45 AM
USER#

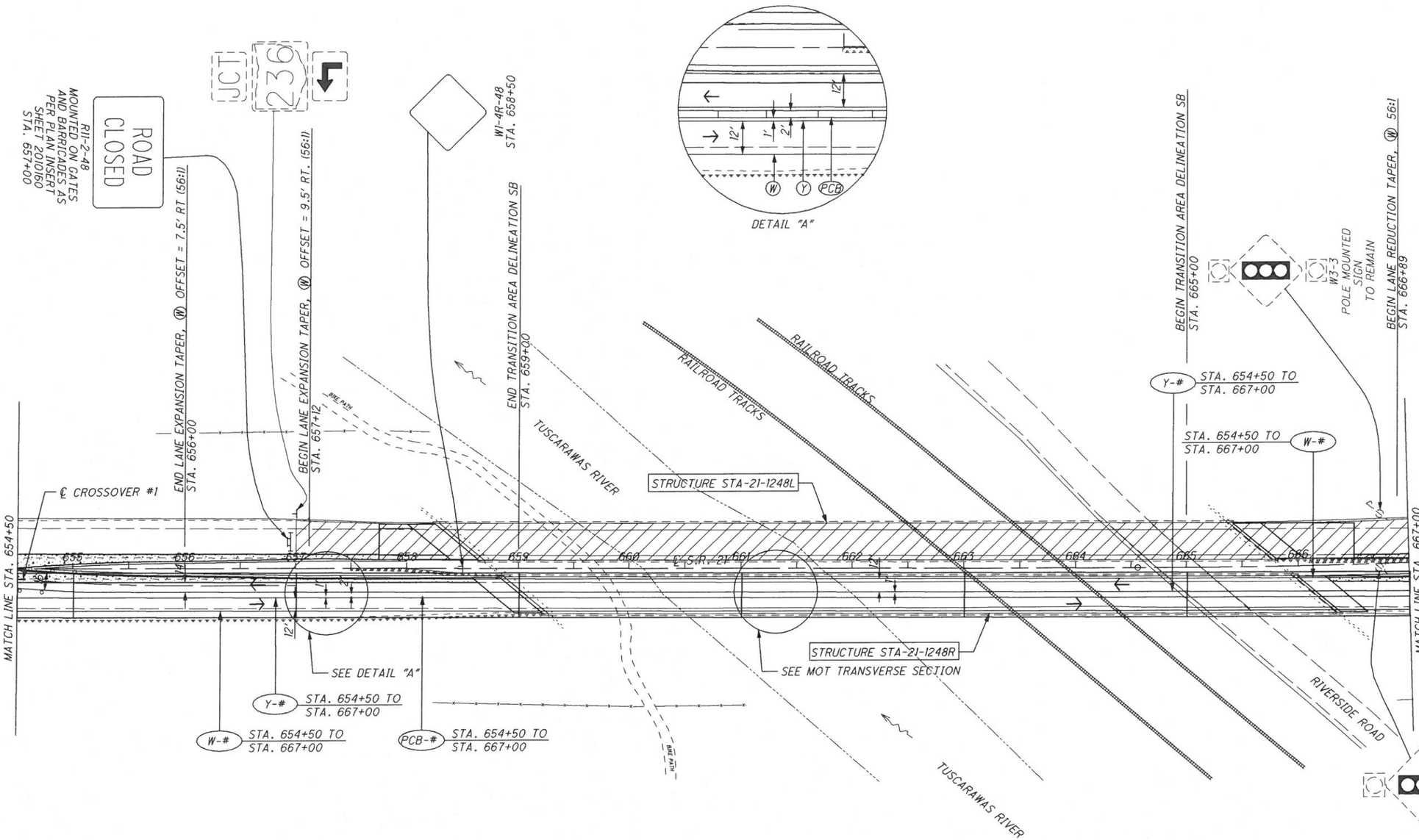

LEGEND

- WARNING LIGHT (TYPE PER MT. - 101.60M)
- SIGN AND TEMPORARY SUPPORT
- CONSTRUCTION BARREL (SPACING AT 40' C/C UNLESS NOTED OTHERWISE)
- WORK AREA
- PAVEMENT FOR MAINTAINING TRAFFIC, CLASS A
- FLASHING ARROW PANEL (TYPE PER MT-35.10)
- WORK ZONE IMPACT ATTENUATOR
- TRAFFIC FLOW ARROW
- W-# WORK ZONE EDGE LINE, WHITE
- Y-# WORK ZONE EDGE LINE, YELLOW
- LA-# WORK ZONE LANE ARROW
- PCB-# WORK ZONE PORTABLE CONCRETE BARRIER
- EXISTING SIGN
- PROPOSED SIGN

NOTES: 1. THE CONTRACTOR SHALL REMOVE ANY EXISTING CONFLICTING PAVEMENT MARKINGS.

2. SEE CROSSOVER PLANS FOR CROSSOVER GEOMETRICS.

HORIZONTAL SCALE IN FEET
0 25 50 100

CALCULATED LOB
CHECKED MAH

GPD ASSOCIATES

MAINTENANCE OF TRAFFIC - CONSTRUCTION PHASE 2
S.R. 21 - STA. 654+50 TO STA. 667+00

STA-21-12.48

15/48

21/115

...\PROJECTS\2006\2006-0087 STA-21-12.49 PART 2\CIVIL\DRAWINGS\MOT\GPD STAGE 2 DGNS 7-27-06\STAGE 1 ELECTRONIC SUBMITTAL\2543MP003.DGN
7/31/2006
7:40:31 AM
USER

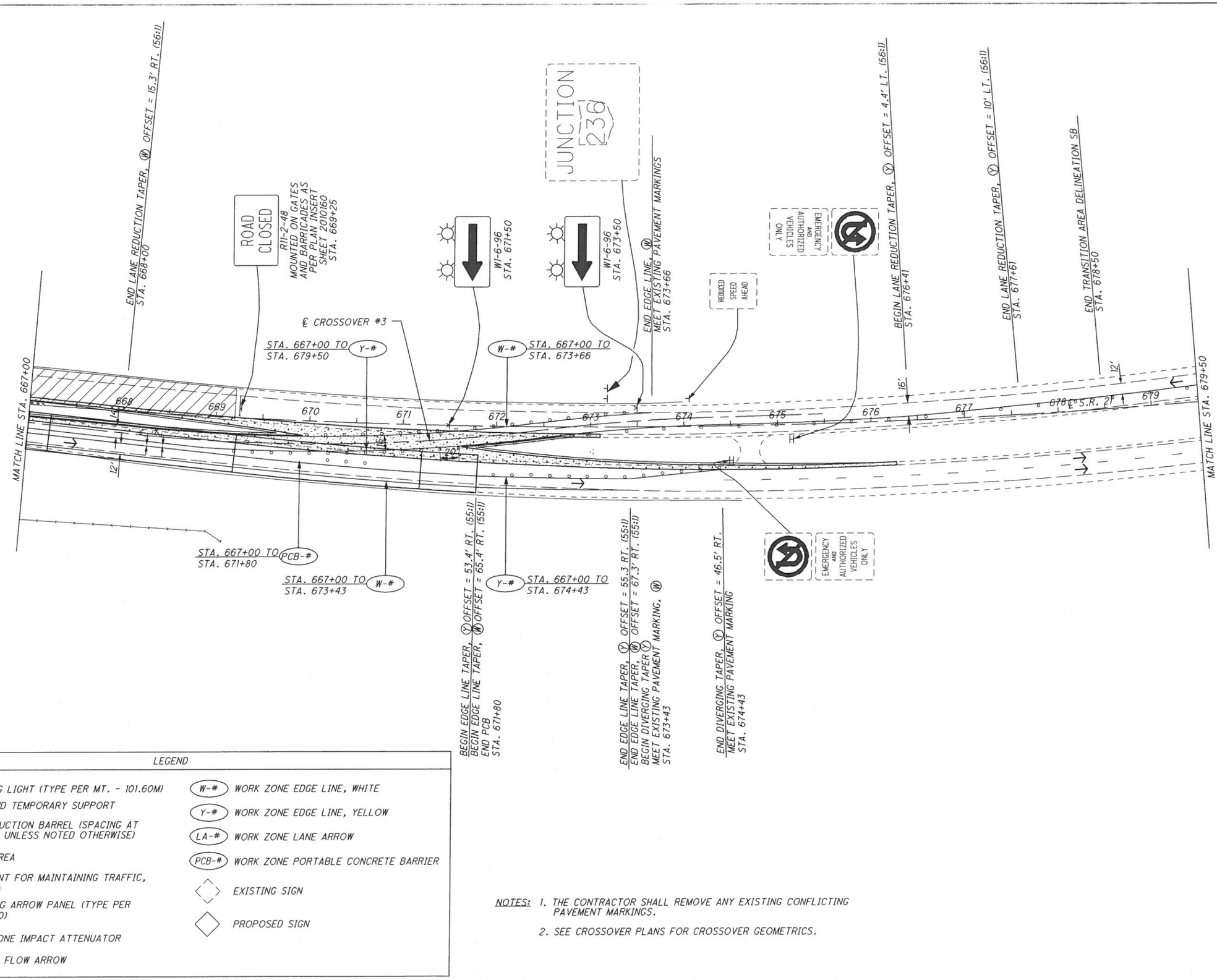

LEGEND

- WARNING LIGHT (TYPE PER MT. - 101.60M)
- SIGN AND TEMPORARY SUPPORT
- CONSTRUCTION BARREL (SPACING AT 40' C/C UNLESS NOTED OTHERWISE)
- WORK AREA
- PAVEMENT FOR MAINTAINING TRAFFIC, CLASS A
- FLASHING ARROW PANEL (TYPE PER MT-35.10)
- WORK ZONE IMPACT ATTENUATOR
- TRAFFIC FLOW ARROW
- W-# WORK ZONE EDGE LINE, WHITE
- Y-# WORK ZONE EDGE LINE, YELLOW
- LA-# WORK ZONE LANE ARROW
- PCB-# WORK ZONE PORTABLE CONCRETE BARRIER
- EXISTING SIGN
- PROPOSED SIGN

NOTES: 1. THE CONTRACTOR SHALL REMOVE ANY EXISTING CONFLICTING PAVEMENT MARKINGS.

2. SEE CROSSOVER PLANS FOR CROSSOVER GEOMETRICS.

CALCULATED LOB
CHECKED MAH

0 25 50 100
HORIZONTAL SCALE IN FEET

GPD ASSOCIATES

MAINTENANCE OF TRAFFIC - CONSTRUCTION PHASE 2
S.R. 21 - STA. 667+00 TO STA. 679+50

STA-21-12.48

16/48

22/115

H:\PROJECTS\2006\2006-0007 STA-21-12.48 PART 2\CIVIL\DRAWINGS\MOT\OPD STAGE 2 DGNS 7-27-06\STAGE 1 ELECTRONIC SUBMITTAL\25433#P004.DGN
7/31/2006
8:41:19 AM
#USER#

LEGEND

- WARNING LIGHT (TYPE PER MT. - 101.60M)
- SIGN AND TEMPORARY SUPPORT
- CONSTRUCTION BARREL (SPACING AT 40' C/C UNLESS NOTED OTHERWISE)
- WORK AREA
- PAVEMENT FOR MAINTAINING TRAFFIC, CLASS A
- FLASHING ARROW PANEL (TYPE PER MT-35.10)
- WORK ZONE IMPACT ATTENUATOR
- TRAFFIC FLOW ARROW
- (W-#) WORK ZONE EDGE LINE, WHITE
- (Y-#) WORK ZONE EDGE LINE, YELLOW
- (LA-#) WORK ZONE LANE ARROW
- (PCB-#) WORK ZONE PORTABLE CONCRETE BARRIER
- EXISTING SIGN
- PROPOSED SIGN

NOTES: 1. THE CONTRACTOR SHALL REMOVE ANY EXISTING CONFLICTING PAVEMENT MARKINGS.

HORIZONTAL SCALE IN FEET
0 25 50 100

CALCULATED LOB
CHECKED MAH

GPD ASSOCIATES

MAINTENANCE OF TRAFFIC - CONSTRUCTION PHASE 2
S.R. 21 - STA. 679+50 TO STA. 692+00

STA-21-12.48

17/48

23/115

C:\PROJECTS\2006\2006-0007 STA-21-12.48 PART 2\CIVIL\DRAWINGS\MOT\GPD STAGE 2 DGNS 7-27-06\STAGE 1 ELECTRONIC SUBMITTAL\2543MP005.DGN
7/31/2006
11:42:11 AM
USER:

H:\PROJECTS\2006\2006-0007 STA-21-12_48 PART 2\CIVIL\DRAWINGS\MOT\GPD STAGE 2 DGNS 7-27-06\STAGE 1 ELECTRONIC SUBMITTAL\25433MP006.DGN
7/31/2006
8:43:01 AM
#USER#

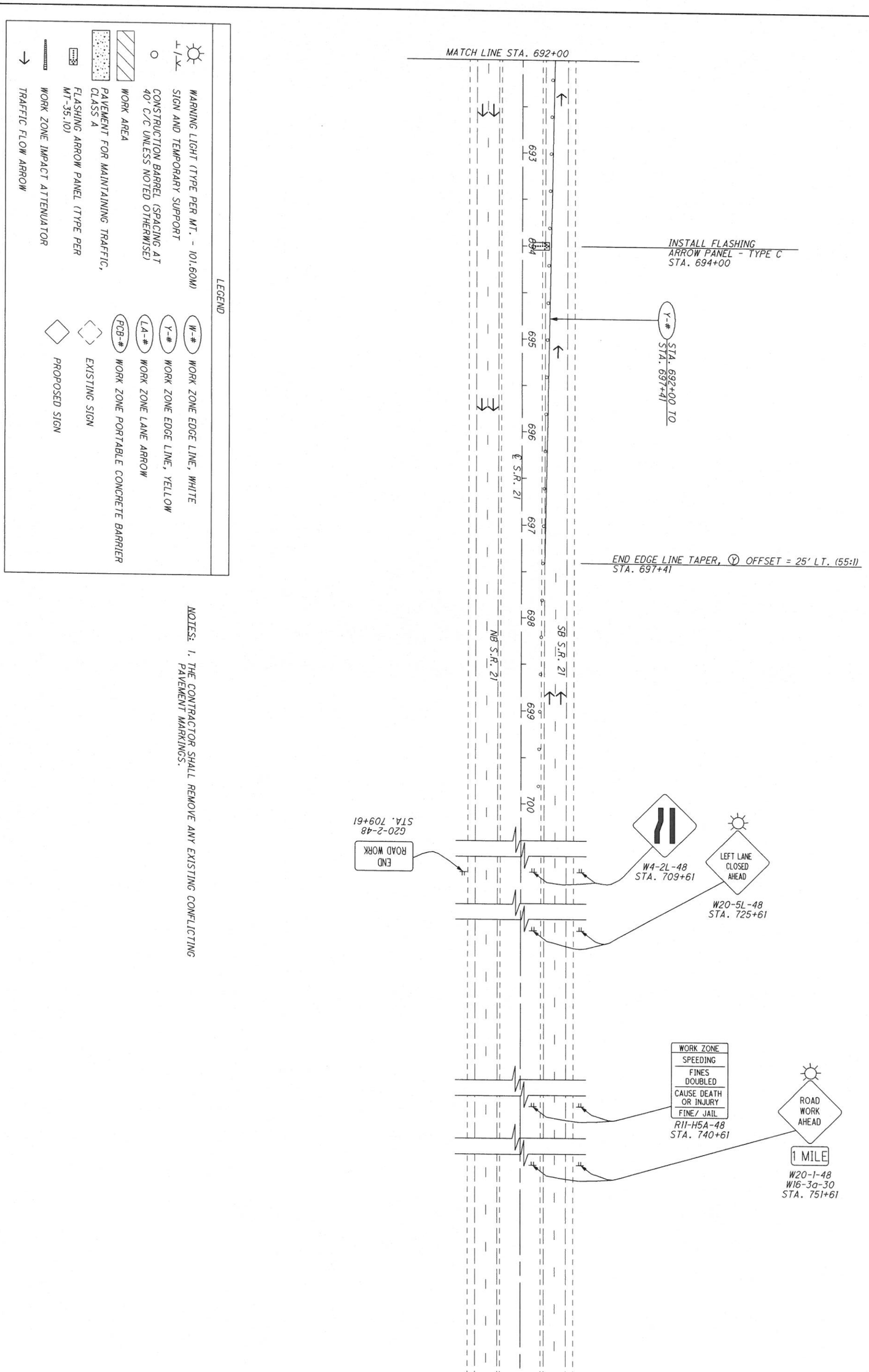

NOTES: 1. THE CONTRACTOR SHALL REMOVE ANY EXISTING CONFLICTING PAVEMENT MARKINGS.

MAINTENANCE OF TRAFFIC - CONSTRUCTION PHASE 2

S.R. 21 - STA. 692+00 TO END

GPD ASSOCIATES

CALCULATED LOB | CHECKED MAH

0 50 25 100 HORIZONTAL SCALE IN FEET

H:\PROJECTS\2006\2006-0007 STA-21-12_48 PART 2\CIVIL\DRAWINGS\MOT\GPD STAGE 2 DGNS 7-27-06\STAGE 1 ELECTRONIC SUBMITTAL\25433MP011.DGN
7/31/2006
8:43:46 AM
#USER#

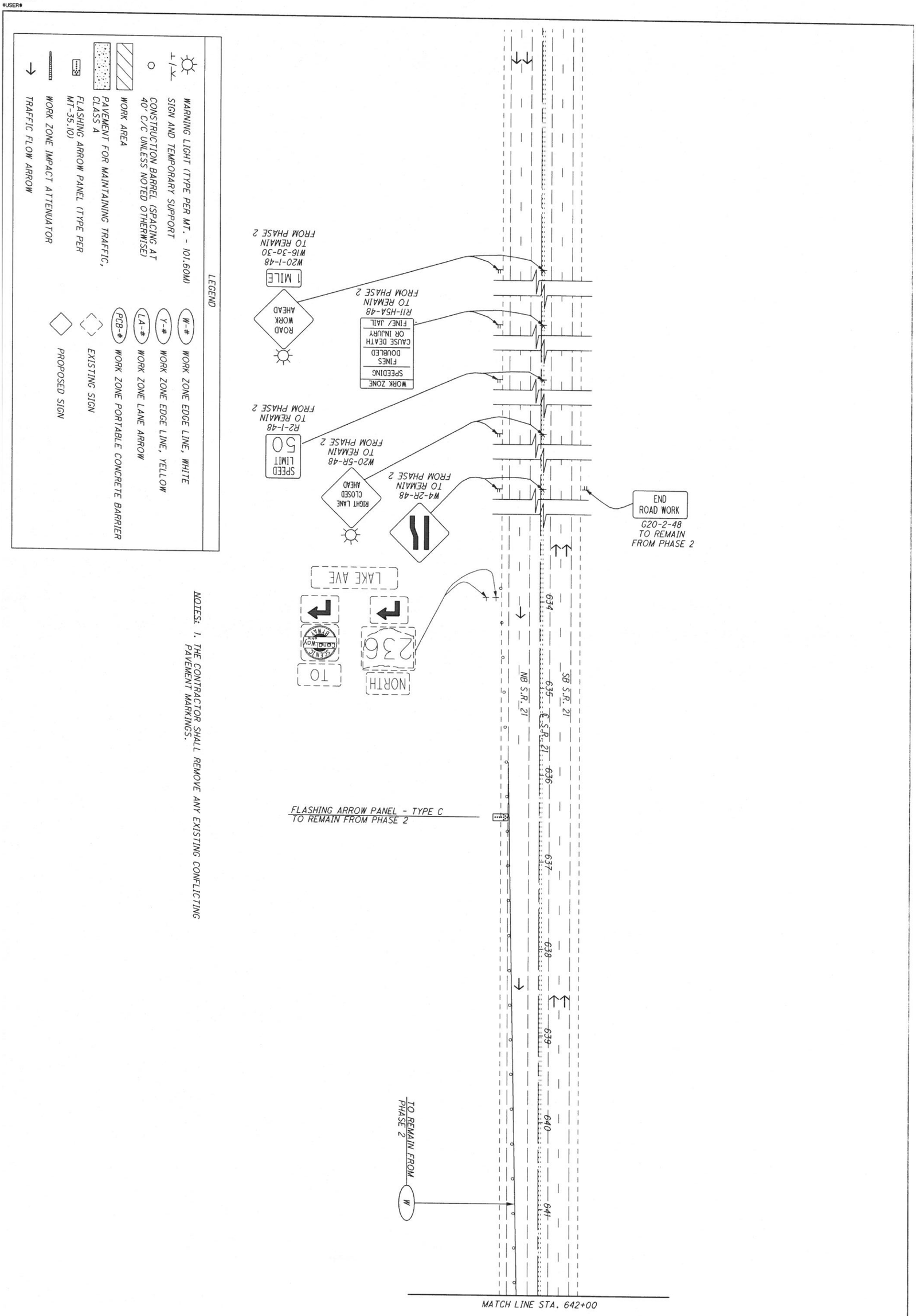

NOTES: 1. THE CONTRACTOR SHALL REMOVE ANY EXISTING CONFLICTING PAVEMENT MARKINGS.

MAINTENANCE OF TRAFFIC - CONSTRUCTION PHASE 3
S.R. 21 - BEGIN TO STA. 642+00

GPD ASSOCIATES

CALCULATED LOB
CHECKED MAH

0 25 50 100
HORIZONTAL SCALE IN FEET

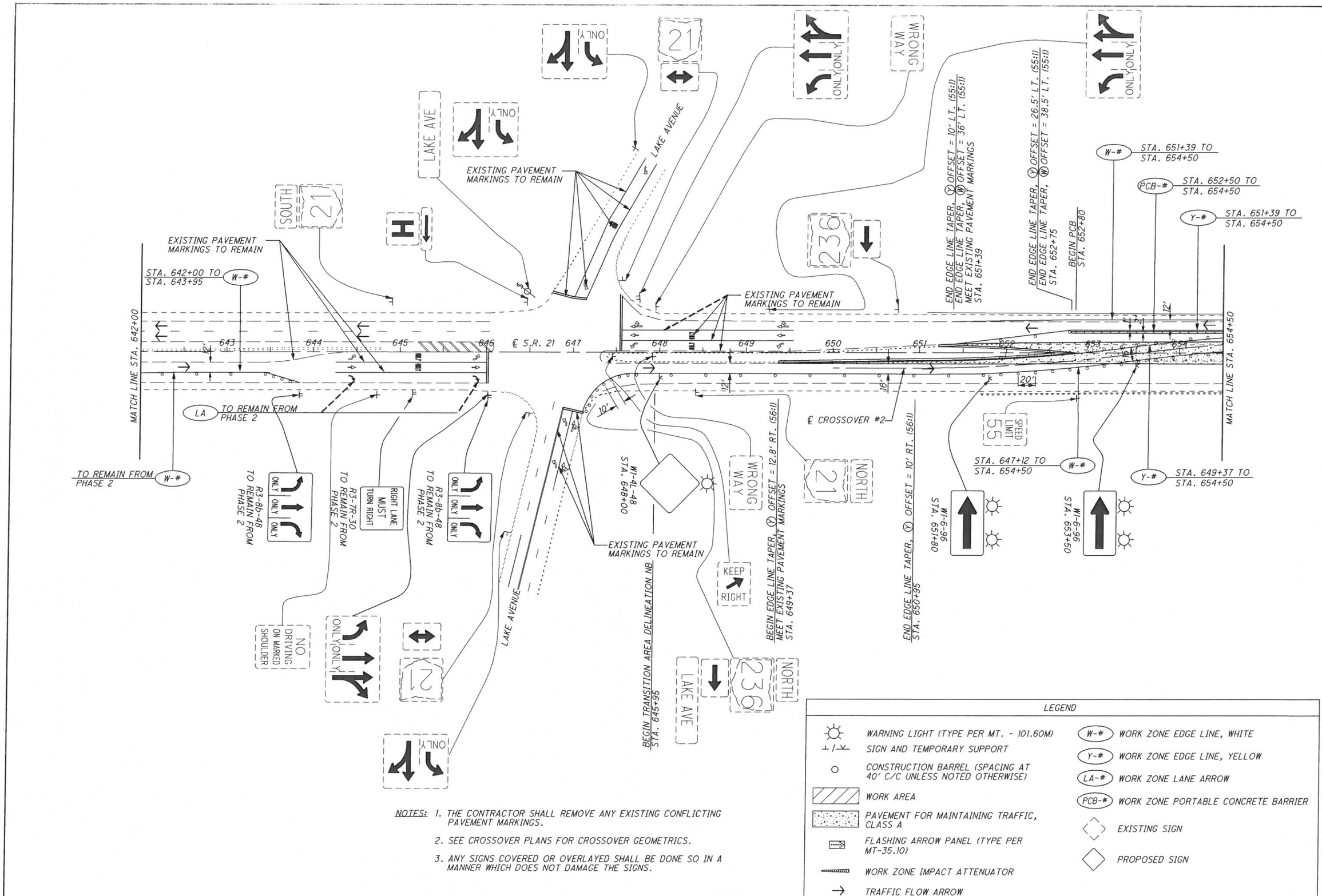

NOTES:
1. THE CONTRACTOR SHALL REMOVE ANY EXISTING CONFLICTING PAVEMENT MARKINGS.
2. SEE CROSSOVER PLANS FOR CROSSOVER GEOMETRICS.
3. ANY SIGNS COVERED OR OVERLAYED SHALL BE DONE SO IN A MANNER WHICH DOES NOT DAMAGE THE SIGNS.

LEGEND

- WARNING LIGHT (TYPE PER MT. - 101.60M)
- SIGN AND TEMPORARY SUPPORT
- CONSTRUCTION BARREL (SPACING AT 40' C/C UNLESS NOTED OTHERWISE)
- WORK AREA
- PAVEMENT FOR MAINTAINING TRAFFIC, CLASS A
- FLASHING ARROW PANEL (TYPE PER MT-35.10)
- WORK ZONE IMPACT ATTENUATOR
- TRAFFIC FLOW ARROW
- W-# WORK ZONE EDGE LINE, WHITE
- Y-# WORK ZONE EDGE LINE, YELLOW
- LA-# WORK ZONE LANE ARROW
- PCB-# WORK ZONE PORTABLE CONCRETE BARRIER
- EXISTING SIGN
- PROPOSED SIGN

HORIZONTAL SCALE IN FEET: 0, 25, 50, 100

CALCULATED LOB
CHECKED MAH

GPD ASSOCIATES

MAINTENANCE OF TRAFFIC - CONSTRUCTION PHASE 3
S.R. 21 - STA. 642+00 TO STA. 654+50

STA-21-12.48

20/48

26/115

I:\PROJECTS\2006\2006-0007 STA-21-12.48 PART 2\CIVIL\DRAWINGS\MOT\GPD STAGE 2 DGNS 7-27-06\STAGE 1 ELECTRONIC SUBMITTAL\25433MP812.DGN
7/31/2006
1:44:27 AM
USER#

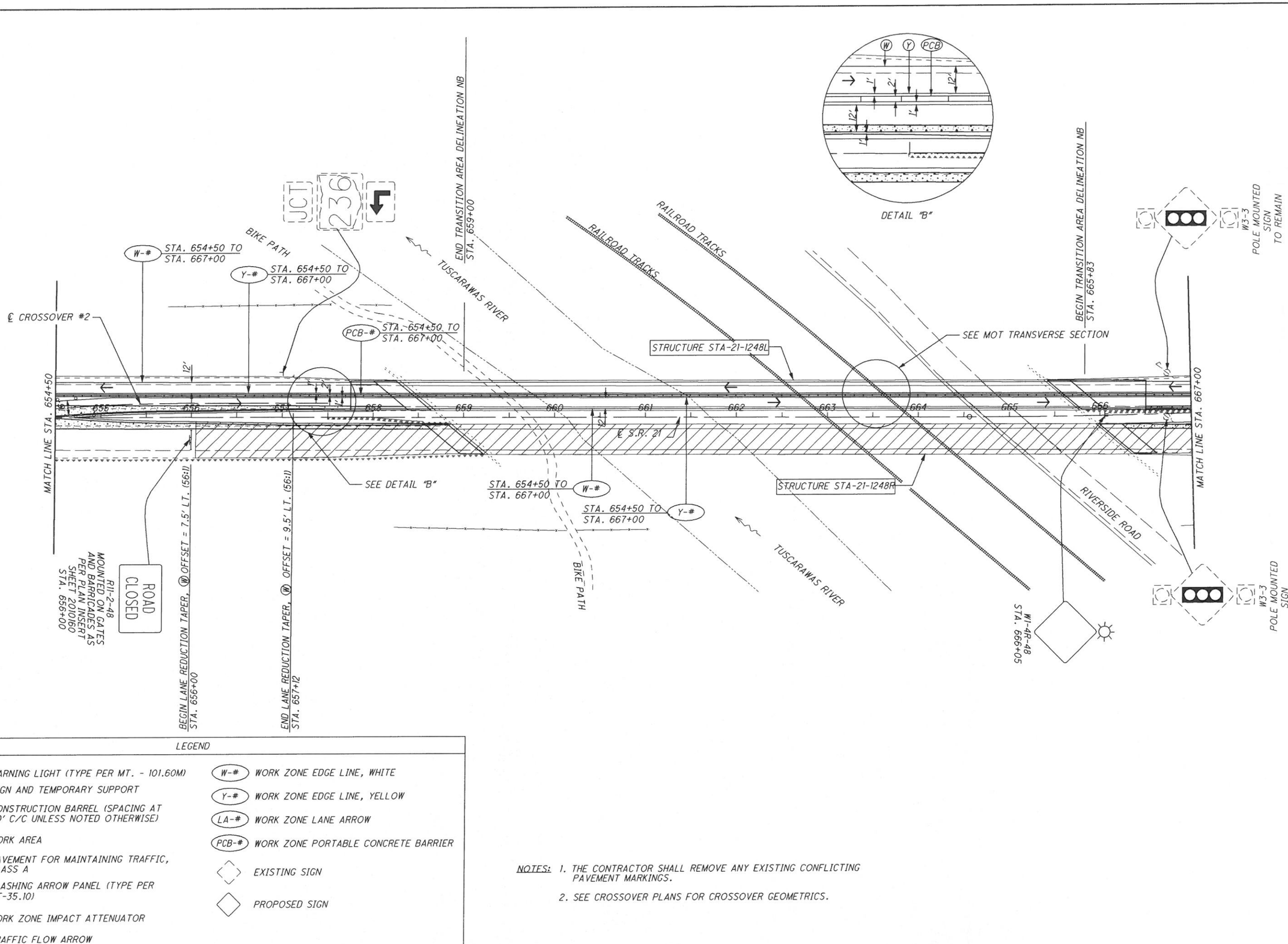

LEGEND

- WARNING LIGHT (TYPE PER MT. - 101.60M)
- SIGN AND TEMPORARY SUPPORT
- CONSTRUCTION BARREL (SPACING AT 40' C/C UNLESS NOTED OTHERWISE)
- WORK AREA
- PAVEMENT FOR MAINTAINING TRAFFIC, CLASS A
- FLASHING ARROW PANEL (TYPE PER MT-35.10)
- WORK ZONE IMPACT ATTENUATOR
- TRAFFIC FLOW ARROW
- W-# WORK ZONE EDGE LINE, WHITE
- Y-# WORK ZONE EDGE LINE, YELLOW
- LA-# WORK ZONE LANE ARROW
- PCB-# WORK ZONE PORTABLE CONCRETE BARRIER
- EXISTING SIGN
- PROPOSED SIGN

NOTES: 1. THE CONTRACTOR SHALL REMOVE ANY EXISTING CONFLICTING PAVEMENT MARKINGS.

2. SEE CROSSOVER PLANS FOR CROSSOVER GEOMETRICS.

HORIZONTAL SCALE IN FEET
0 25 50 100

CALCULATED LOB
CHECKED MAH

GPD ASSOCIATES

MAINTENANCE OF TRAFFIC - CONSTRUCTION PHASE 3
S.R. 21 - STA. 654+50 TO STA. 667+00

STA-21-12.48

21/48

27/115

C:\PROJECTS\2006\2006-0007 STA-21-12.48 PART 2\CIVIL\DRAWINGS\MOT\GPD STAGE 2 DGNS 7-27-06\STAGE 1 ELECTRONIC SUBMITTAL\2543MP813.DGN
7/31/2006
1:45:18 PM
JSEH

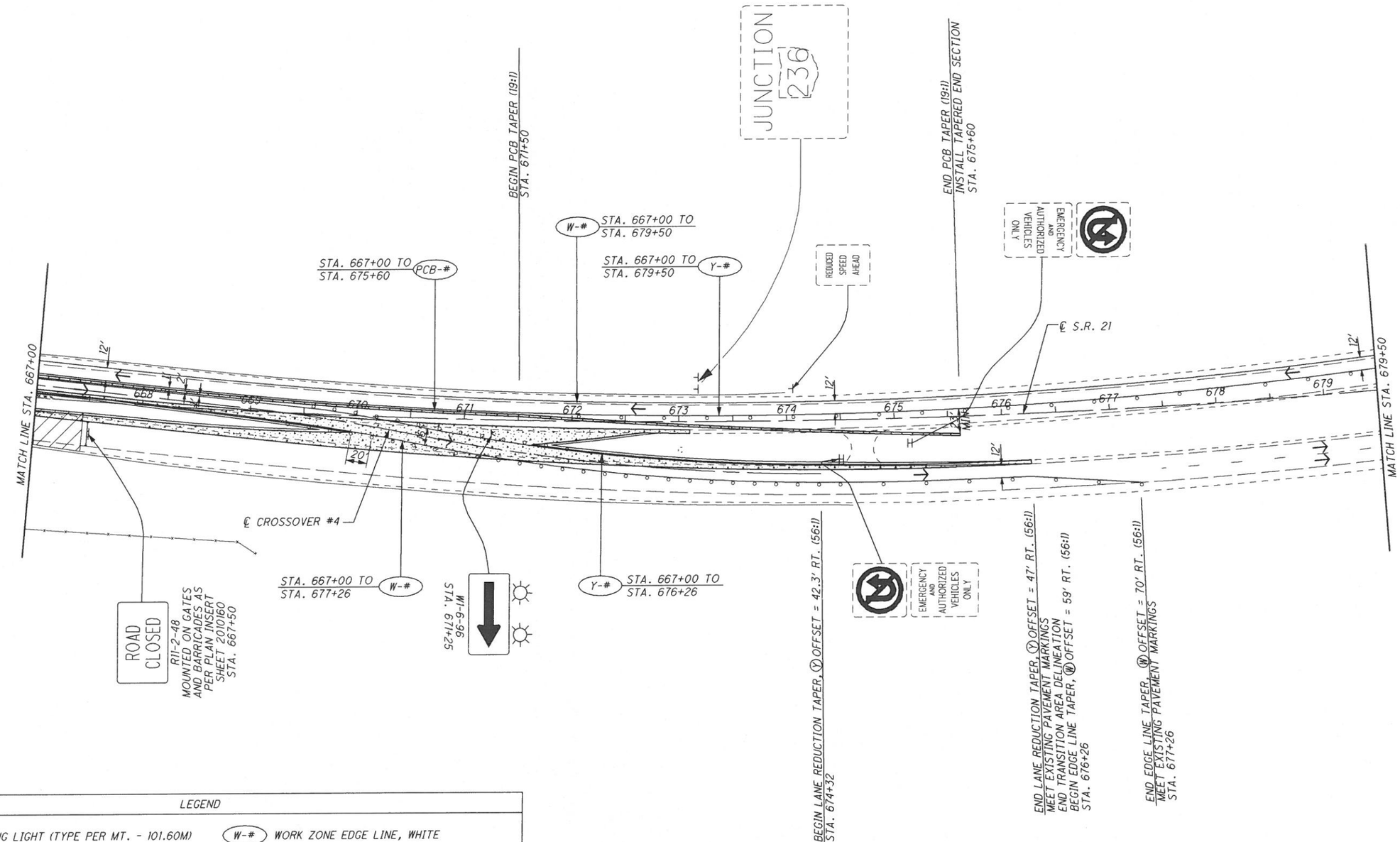

LEGEND

- WARNING LIGHT (TYPE PER MT. - 101.60M)
- SIGN AND TEMPORARY SUPPORT
- CONSTRUCTION BARREL (SPACING AT 40' C/C UNLESS NOTED OTHERWISE)
- WORK AREA
- PAVEMENT FOR MAINTAINING TRAFFIC, CLASS A
- FLASHING ARROW PANEL (TYPE PER MT-35.10)
- WORK ZONE IMPACT ATTENUATOR
- TRAFFIC FLOW ARROW
- W-# WORK ZONE EDGE LINE, WHITE
- Y-# WORK ZONE EDGE LINE, YELLOW
- LA-# WORK ZONE LANE ARROW
- PCB-# WORK ZONE PORTABLE CONCRETE BARRIER
- EXISTING SIGN
- PROPOSED SIGN

NOTES: 1. THE CONTRACTOR SHALL REMOVE ANY EXISTING CONFLICTING PAVEMENT MARKINGS.

2. SEE CROSSOVER PLANS FOR CROSSOVER GEOMETRICS.

HORIZONTAL SCALE IN FEET
0 25 50 100

CALCULATED LOB
CHECKED MAH

GPD ASSOCIATES

MAINTENANCE OF TRAFFIC - CONSTRUCTION PHASE 3
S.R. 21 - STA. 667+00 TO STA. 679+50

STA-21-12.48

22/48

28/115

C:\PROJECTS\2006\2006-0007 STA-21-12.48 PART 2\C1V1L\DRAWINGS\MOT\GPD STAGE 2 DGNS 7-27-06\STAGE 1 ELECTRONIC SUBMITTAL\25439MP814.DGN
7/31/2006
10:46:35 AM
USER#

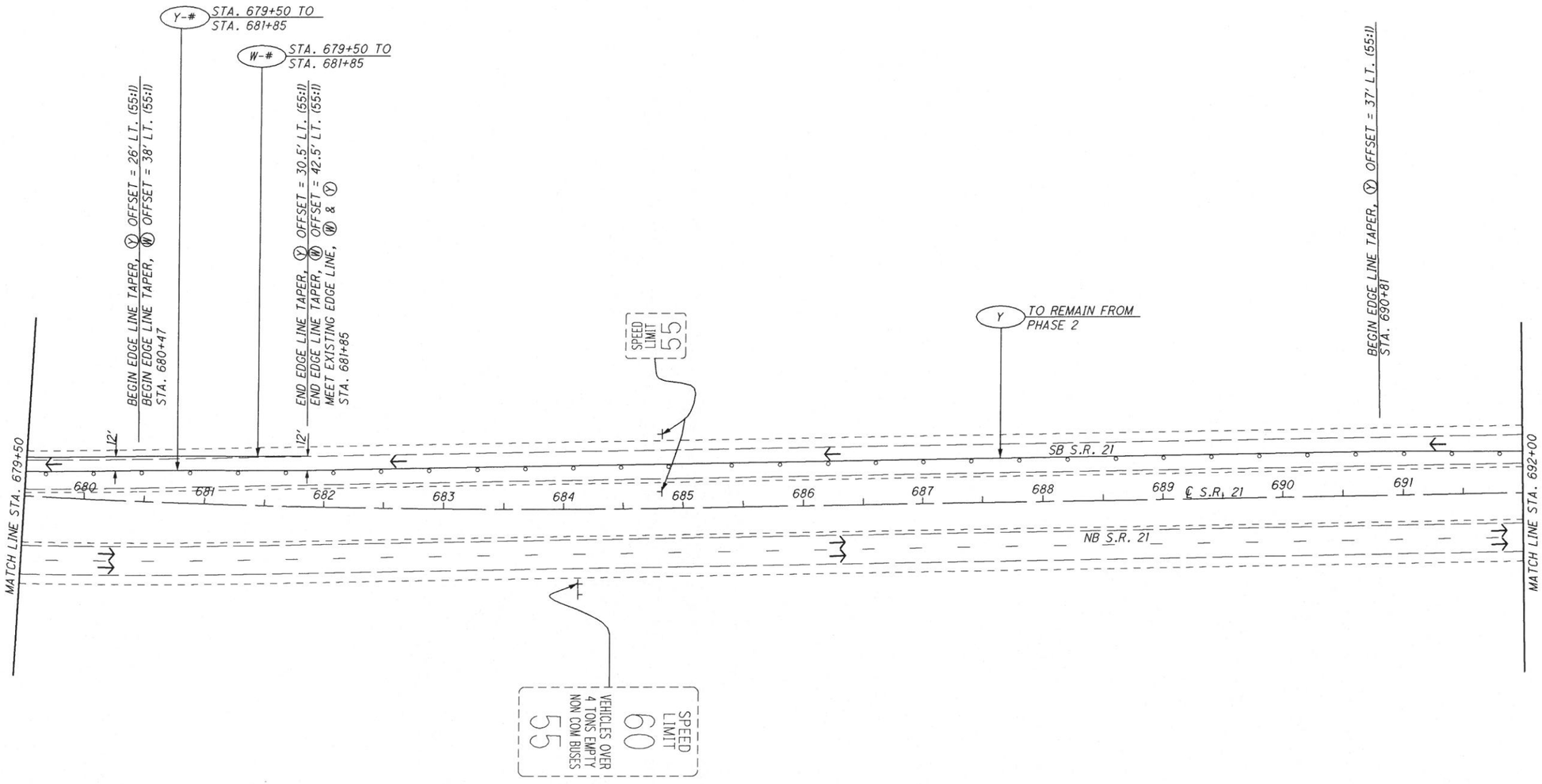

LEGEND

- WARNING LIGHT (TYPE PER MT. - 101.60M)
- SIGN AND TEMPORARY SUPPORT
- CONSTRUCTION BARREL (SPACING AT 40' C/C UNLESS NOTED OTHERWISE)
- WORK AREA
- PAVEMENT FOR MAINTAINING TRAFFIC, CLASS A
- FLASHING ARROW PANEL (TYPE PER MT-35.10)
- WORK ZONE IMPACT ATTENUATOR
- TRAFFIC FLOW ARROW
- W-# WORK ZONE EDGE LINE, WHITE
- Y-# WORK ZONE EDGE LINE, YELLOW
- LA-# WORK ZONE LANE ARROW
- PCB-# WORK ZONE PORTABLE CONCRETE BARRIER
- EXISTING SIGN
- PROPOSED SIGN

NOTES: 1. THE CONTRACTOR SHALL REMOVE ANY EXISTING CONFLICTING PAVEMENT MARKINGS.

HORIZONTAL SCALE IN FEET
0 25 50 100

CALCULATED LOB
CHECKED MAH

GPD ASSOCIATES

MAINTENANCE OF TRAFFIC - CONSTRUCTION PHASE 3
S.R. 21 - STA. 679+50 TO STA. 692+00

STA-21-12.48

23/48

29/115

H:\PROJECTS\2006\2006-0007 STA-21-12.48 PART 2\CIVIL\DRAWINGS\MOT\GPD STAGE 2 DGNS 7-27-06\STAGE 1 ELECTRONIC SUBMITTAL\25433MP815.DGN
7/31/2006
01:47:26 AM
#USER#

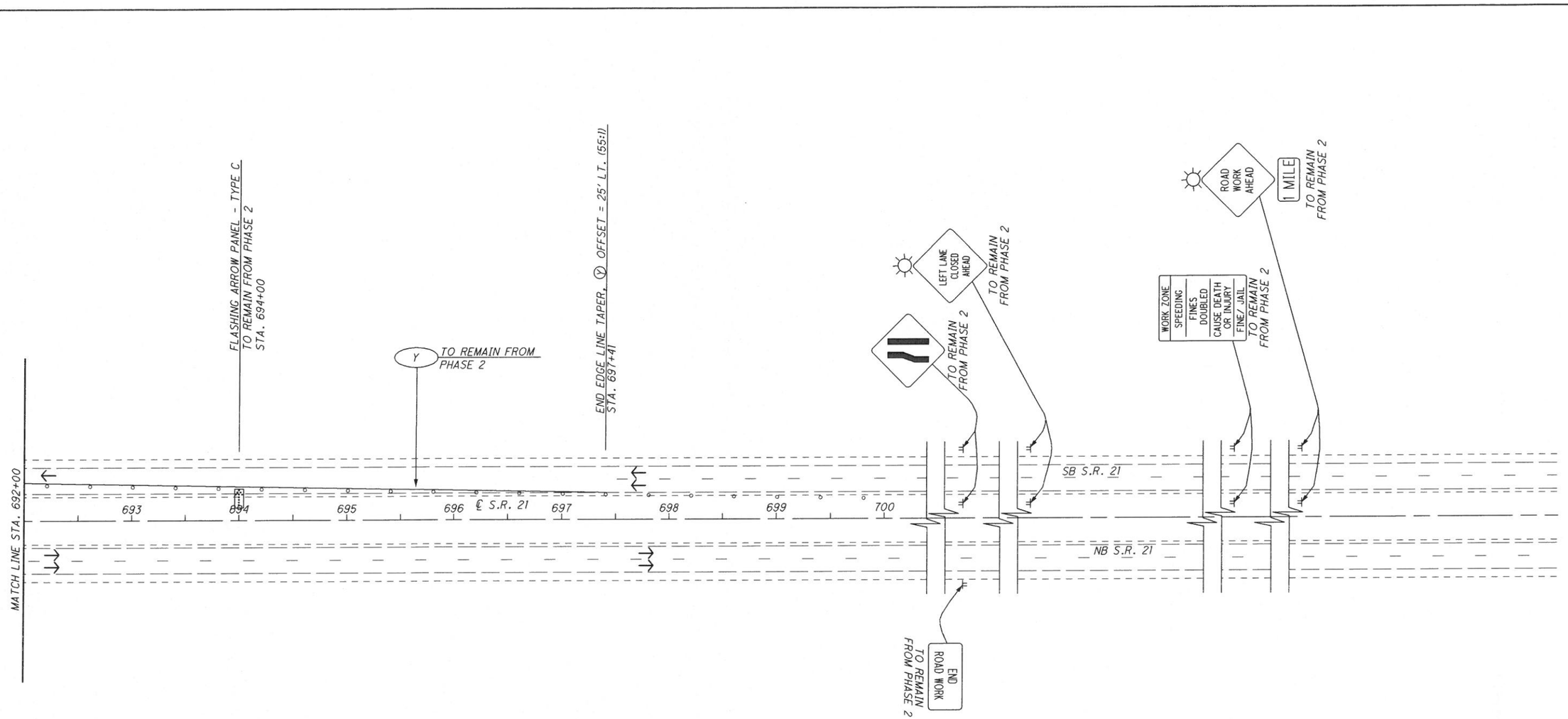

LEGEND

- WARNING LIGHT (TYPE PER MT. - 101.60M)
- SIGN AND TEMPORARY SUPPORT
- CONSTRUCTION BARREL (SPACING AT 40' C/C UNLESS NOTED OTHERWISE)
- WORK AREA
- PAVEMENT FOR MAINTAINING TRAFFIC, CLASS A
- FLASHING ARROW PANEL (TYPE PER MT-35.10)
- WORK ZONE IMPACT ATTENUATOR
- TRAFFIC FLOW ARROW
- (W-#) WORK ZONE EDGE LINE, WHITE
- (Y-#) WORK ZONE EDGE LINE, YELLOW
- (LA-#) WORK ZONE LANE ARROW
- (PCB-#) WORK ZONE PORTABLE CONCRETE BARRIER
- EXISTING SIGN
- PROPOSED SIGN

NOTES: 1. THE CONTRACTOR SHALL REMOVE ANY EXISTING CONFLICTING PAVEMENT MARKINGS.

CALCULATED LOB
CHECKED MAH

0 25 50 100
HORIZONTAL SCALE IN FEET

GPD ASSOCIATES

MAINTENANCE OF TRAFFIC - CONSTRUCTION PHASE 3
S.R. 21 - STA. 692+00 TO END

STA-21-12.48

24/48

30/115

H:\PROJECTS\2006\2006-0807 STA-21-12.48 PART 2\CIVIL\DRAWINGS\MOT\GPD STAGE 2 DGNS 7-27-06\STAGE 1 ELECTRONIC SUBMITTAL\C2543MP816.DGN
7/31/2006
8:49:28 AM
USER

BEGIN CROSSOVER #1 ALIGNMENT
S.R. 21 STA. 650+00, 18' LT.

POT Sta. 10+00.00

PC STA. 10+95.22 (CROSSOVER #1)
STA. 650+95.22, 18' LT. (S.R. 21)

℄ S.R. 21

649 N 25° 58' 30" W 650 651 652 653

N 25° 58' 30" W

℄ CROSSOVER #1

℄ CROSSOVER #2

SB S.R. 21

NB S.R. 21

CONTRACTOR TO GRADE SHOULDER
TO AVOID ADJUSTING BASIN ELEVATION.

PRC STA. 13+48.35 (CROSSOVER #1)
STA. 653+47.61, 1.25' LT. (S.R. 21)

MATCH LINE STA. 654+00 (S.R. 21)
MATCH LINE STA. 14+01.11 (CROSSOVER #1)
MATCH LINE STA. 24+01.11 (CROSSOVER #2)

BEGIN CROSSOVER #2 ALIGNMENT
S.R. 21 STA. 650+00, 18' RT.

PC STA. 20+95.22 (CROSSOVER #2)
STA. 650+95.22, 18' RT. (S.R. 21)

PRC STA. 23+48.35 (CROSSOVER #2)
STA. 653+47.61, 1.25' RT. (S.R. 21)

① PROPOSED CURVE
P.I. Sta = 12+21.97
D = 7° 35' 38" (RT)
Dc = 3° 00' 00"
R = 1,909.86'
T = 126.75'
L = 253.13'
E = 4.20'

② PROPOSED CURVE
P.I. Sta = 14+75.10
D = 7° 35' 38" (LT)
Dc = 3° 00' 00"
R = 1,909.86'
T = 126.75'
L = 253.13'
E = 4.20'

③ PROPOSED CURVE
P.I. Sta = 22+21.97
D = 7° 35' 38" (LT)
Dc = 3° 00' 00"
R = 1,909.86'
T = 126.75'
L = 253.13'
E = 4.20'

④ PROPOSED CURVE
P.I. Sta = 24+75.10
D = 7° 35' 38" (RT)
Dc = 3° 00' 00"
R = 1,909.86'
T = 126.75'
L = 253.13'
E = 4.20'

LEGEND

TEMPORARY PAVEMENT CLASS A, FOR CROSSOVERS

TEMPORARY DITCH FLOW LINE

PROP. CROSSOVER #1 ELEVATIONS:
12+48.02 944.36 | 12+50 944.40 | 12+75 944.89 | 13+00 945.39 | 13+25 945.92 | 13+50 946.47 | 13+75 947.05

PROP. CROSSOVER #2 ELEVATIONS:
22+39.06 944.43 | 22+50 944.62 | 22+75 945.05 | 23+00 945.49 | 23+25 945.97 | 23+50 946.48 | 23+75 947.03

970 965 960 955 950 945 940 935 930

649 650 651 652 653

EX. PROFILE CROSSOVER #2
EX. VERTICAL CURVE
EX. PROFILE CROSSOVER #1
EX. VERTICAL CURVE

PVI STA. 22+39.06
ELEV. 944.43
PVI STA. 12+48.02
ELEV. 944.36

STA 22+81.70
ELEV 945.17

STA 12+82.99
ELEV 945.05

152.57' VC
P.V.I. STA 23+57.99
ELEV = 946.48'

PVI STA. 13+51.99 (CROSSOVER #1)
PVI STA. 23+57.99 (CROSSOVER #2)
STA. 653+57.17 (S.R 21)
ELEV. - 946.65

+1.97 %
-1.72 %
+2.62 %
+2.65 %

PROP. PROFILE CROSSOVER #2
PROP. PROFILE CROSSOVER #1

150.00' VC
P.V.I. STA 13+57.99
ELEV = 946.53'

MATCH LINE STA. 654+00 (S.R. 21)
MATCH LINE STA. 14+01.11 (CROSSOVER #1)
MATCH LINE STA. 24+01.11 (CROSSOVER #2)

HORIZONTAL SCALE IN FEET
0 10 20 40

CALCULATED LOB
CHECKED MAH

GPD ASSOCIATES

GEOMETRIC PLAN - CROSSOVERS #1 & #2
BEGIN TO STA. 654+00

STA-21-12.48

25 / 48

31 / 115

H:\PROJECTS\2005\2005-0007 STA-21-12.48 PART 2\CIVIL\DRAWINGS\MOT\GPD STAGE 2 DGNS 7-27-06\STAGE 1 ELECTRONIC SUBMITTAL\25433M001.DGN
7/21/2006
8:49:31 AM
USER#

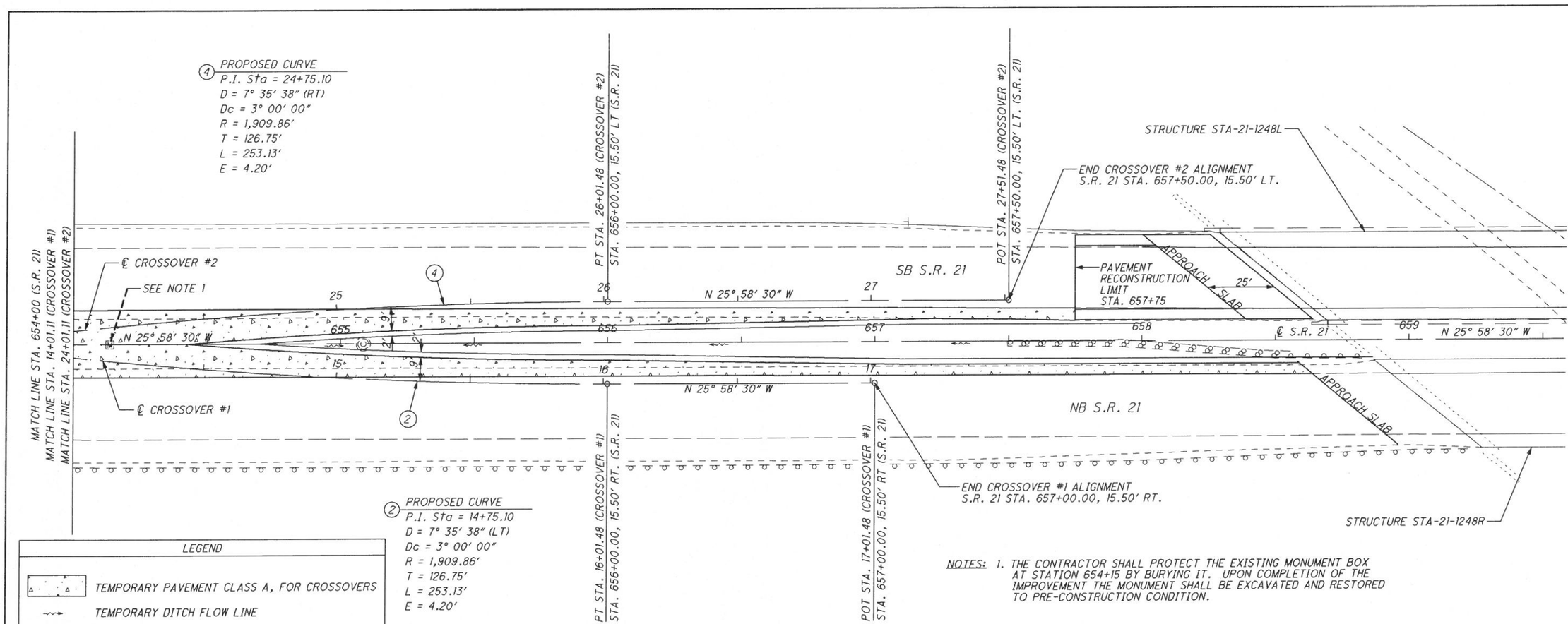

NOTES: 1. THE CONTRACTOR SHALL PROTECT THE EXISTING MONUMENT BOX AT STATION 654+15 BY BURYING IT. UPON COMPLETION OF THE IMPROVEMENT THE MONUMENT SHALL BE EXCAVATED AND RESTORED TO PRE-CONSTRUCTION CONDITION.

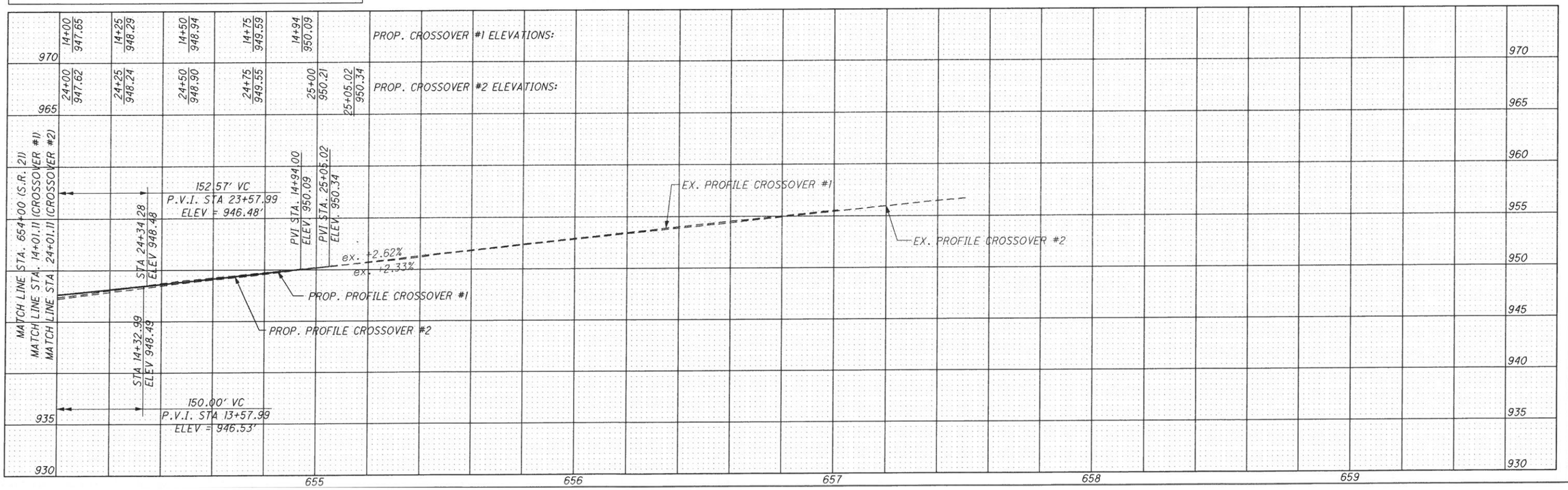

HORIZONTAL SCALE IN FEET
0 10 20 40
CALCULATED LOB
CHECKED MAH
GPD ASSOCIATES

GEOMETRIC PLAN - CROSSOVERS #1 & #2
STA. 654+00 TO END

STA-21-12.48

26/48

32/115

H:\PROJECTS\2006\2006-0007 STA-21-12.48 PART 2\CIVIL\DRAWINGS\MOT\GPD STAGE 2 DGNS 7-27-06\STAGE 1 ELECTRONIC SUBMITTAL\25433H0002.DGN
7/31/2006
1:50:46 PM
USER#

LEGEND

TEMPORARY PAVEMENT CLASS A, FOR CROSSOVERS

TEMPORARY DITCH FLOW LINE

(1) EXISTING CURVE (S.R. 21)
P.I. Sta = 674+85.13
D = 15° 20' 30" (LT)
Dc = 0° 45' 00"
R = 7,639.43'
T = 1,028.93'
L = 2,045.55'
E = 68.98'

(8) PROPOSED CURVE
P.I. Sta = 42+68.18
D = 5° 06' 03" (RT)
Dc = 3° 00' 00"
R = 1,909.86'
T = 85.07'
L = 170.03'
E = 1.89'

(9) PROPOSED CURVE
P.I. Sta = 45+47.25
D = 11° 36' 26" (LT)
Dc = 3° 00' 00"
R = 1,909.86'
T = 194.12'
L = 386.91'
E = 9.84'

BEGIN CROSSOVER #4 ALIGNMENT
STA. 667+00.00, 11.62' LT. (S.R. 21)

STRUCTURE STA-21-1248L

APPROACH SLAB

PAVEMENT RECONSTRUCTION LIMIT STA. 666+50

25'

N 25° 58' 30" W

℄ CROSSOVER #4

℄ S.R. 21

PC STA. 41+83.11 (CROSSOVER #4)
STA. 668+83.12, 3.58' LT (S.R. 21)

PRC Sta. 43+53.14 (CROSSOVER #4)
STA. 670+51.91, 15.33' RT. (S.R. 21)

SB S.R. 21

NB S.R. 21

℄ CROSSOVER #3

N 25° 58' 30" W

APPROACH SLAB

Ex SL

STRUCTURE STA-21-1248R

BEGIN CROSSOVER #3 ALIGNMENT
STA. 667+00, 19.40' RT. (S.R. 21)

PC STA. 31+00.35 (CROSSOVER #3)
STA. 668+00.00, 23.26' RT (S.R. 21)

MATCH LINE STA. 671+00 (S.R. 21)
MATCH LINE STA. 34+01.51 (CROSSOVER #3)
MATCH LINE STA. 44+01.95 (CROSSOVER #4)

(P1) TEMPORARY CULVERT, 12"
BEGIN STA. 668+50, 10.5' RT.
END STA. 672+50, 25' RT.
LENGTH = 400'

(5) PROPOSED CURVE
P.I. Sta = 33+26.06
D = 13° 28' 48" (LT)
Dc = 3° 00' 00"
R = 1,909.86'
T = 225.71'
L = 449.33'
E = 13.29'

PROP. CROSSOVER #3 ELEVATIONS:

32+04.94	32+25	32+50	32+75	33+00	33+25	33+50	33+75	34+00
987.06	987.47	987.99	988.51	989.02	989.49	989.94	990.35	990.72

PROP. CROSSOVER #4 ELEVATIONS:

42+32.78	42+50	42+75	43+00	43+25	43+50	43+75	44+00
987.43	987.79	988.31	988.83	989.35	989.86	990.33	990.75

200.00' VC
P.V.I. STA 33+83.53
ELEV = 990.75'
K = 184

150.00' VC
P.V.I. STA 44+08.53
ELEV = 991.09'
K = 133

PVI STA. 32+04.94
ELEV. 987.06

PVI STA. 42+32.78
ELEV. 987.43

STA 32+83.53
ELEV 988.68

STA 43+33.53
ELEV 989.53

STA. 33+83.53 (CROSSOVER #3)
PVI STA. 43+83.81 (CROSSOVER #4)
STA. 670+82.11 (S.R. 21)
ELEV. = 990.48

PROP. PROFILE CROSSOVER #3

PROP. PROFILE CROSSOVER #4

EX. PROFILE CROSSOVER #3

EX. PROFILE CROSSOVER #4

+.90%

+1.63%

+2.07 %

+2.08 %

1015 1010 1005 1000 995 990 985 980 975

666 667 668 669 670

MATCH LINE STA. 671+00 (S.R. 21)
MATCH LINE STA. 34+01.51 (CROSSOVER #3)
MATCH LINE STA. 44+01.95 (CROSSOVER #4)

HORIZONTAL SCALE IN FEET
0 10 20 40

CALCULATED LOB
CHECKED MAH

GPD ASSOCIATES

GEOMETRIC PLAN - CROSSOVERS #3 & #4
BEGIN TO STA. 671+00

STA-21-12.48

27/48

33/115

H:\PROJECTS\2006\2006-0007 STA-21-12.48 PART 2\CIVIL\DRAWINGS\MOT\GPD STAGE 2 DGNS 7-27-06\STAGE 1 ELECTRONIC SUBMITTAL\2543M#003.DGN
7/31/2006
9:51:47 AM
USER#

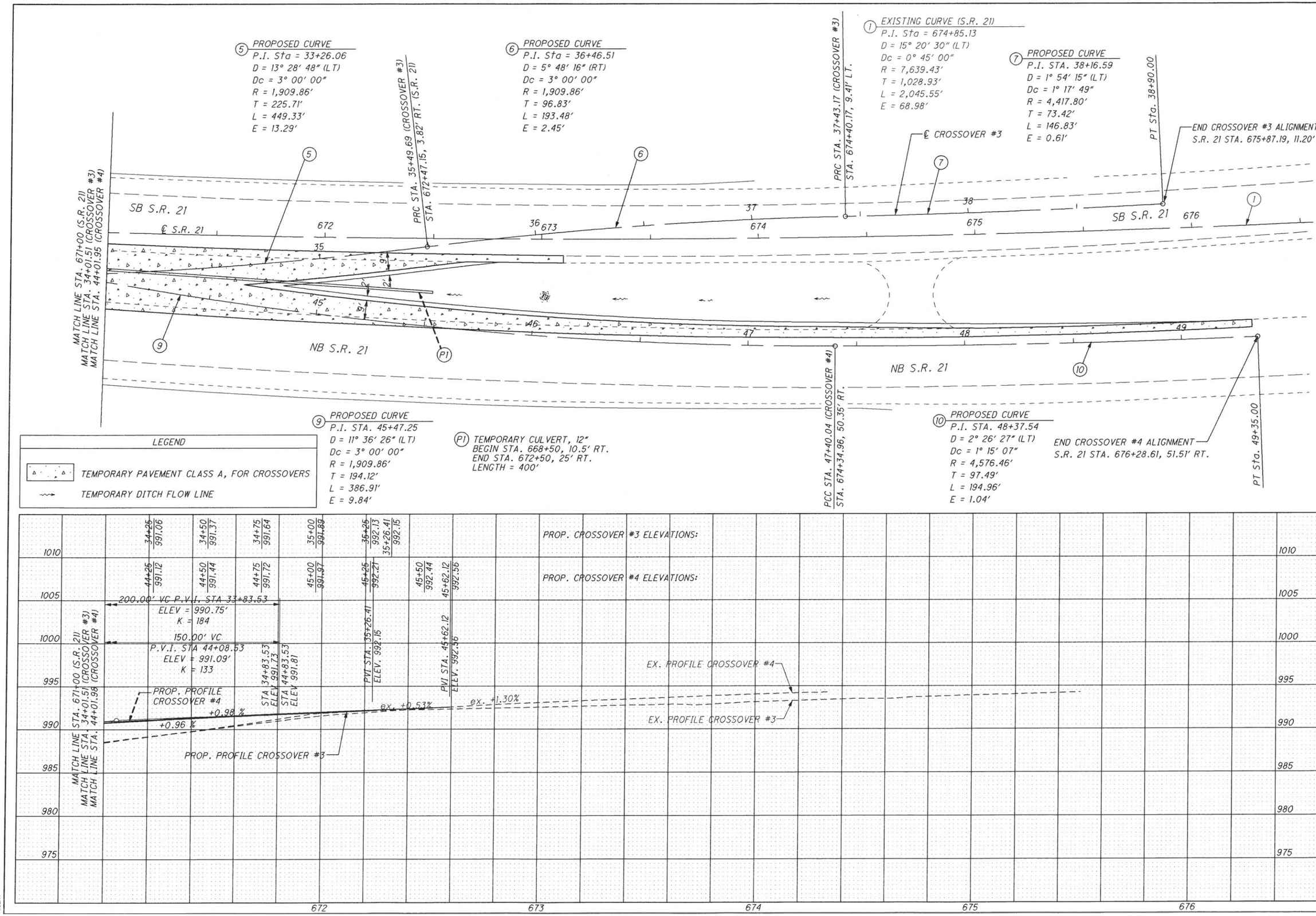

HORIZONTAL SCALE IN FEET
0 10 20 40

CALCULATED LOB
CHECKED MAH

GPD ASSOCIATES

GEOMETRIC PLAN - CROSSOVERS #3 & #4
STA. 671+00 TO END

STA-21-12.48

H:\PROJECTS\2006\2006-0007 STA-21-12.48 PART 2\CIVIL\DRAWINGS\MOT\GPD STAGE 2 DGNS 7-27-06\STAGE 1 ELECTRONIC SUBMITTAL\25433M004.DGN
7/31/2006
8:52:56 AM
$USER$

SEEDING	
END WIDTH	SQ. YDS.

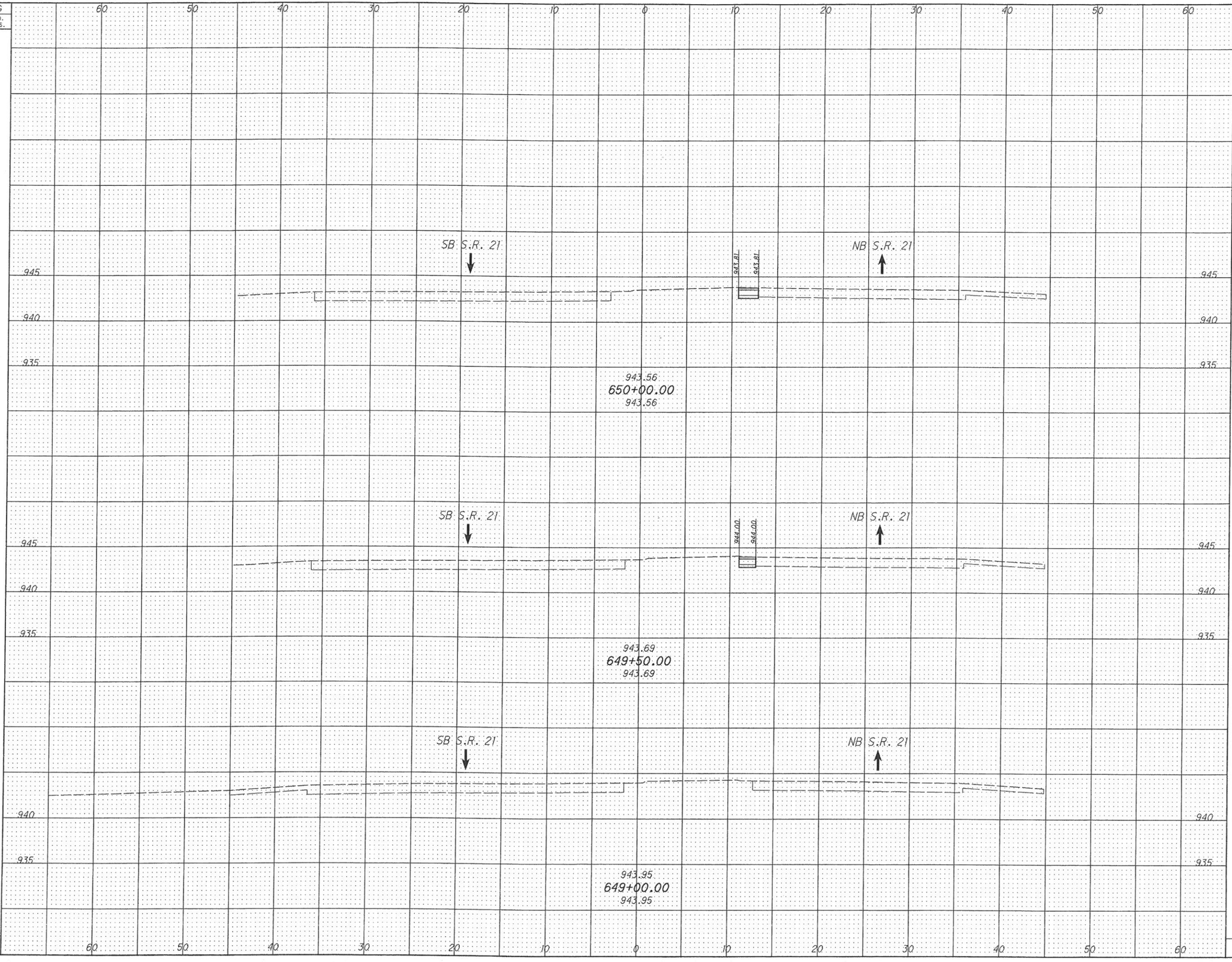

END AREA		VOLUME	
CUT	FILL	CUT	FILL
		7	0
3	0		
		5	0
2	0		
		2	0
0	0		
		14	0

CALCULATED BJE
CHECKED MAH

GPD ASSOCIATES

CROSS SECTIONS - CROSSOVERS
MAINTENANCE OF TRAFFIC CROSSOVERS
STA. 649+00.00 TO STA. 650+00.00

STA-21-12.48

29/48

35/115

\\AKRNB1\DATA\C1V1L\2004054\00\STA\25433\NOT\BASEMAPS\25433XS001.DGN
7/27/2006
4:21:05 PM
SVARRECCHIA-AKRONV8

SEEDING	
END WIDTH	SQ. YDS.

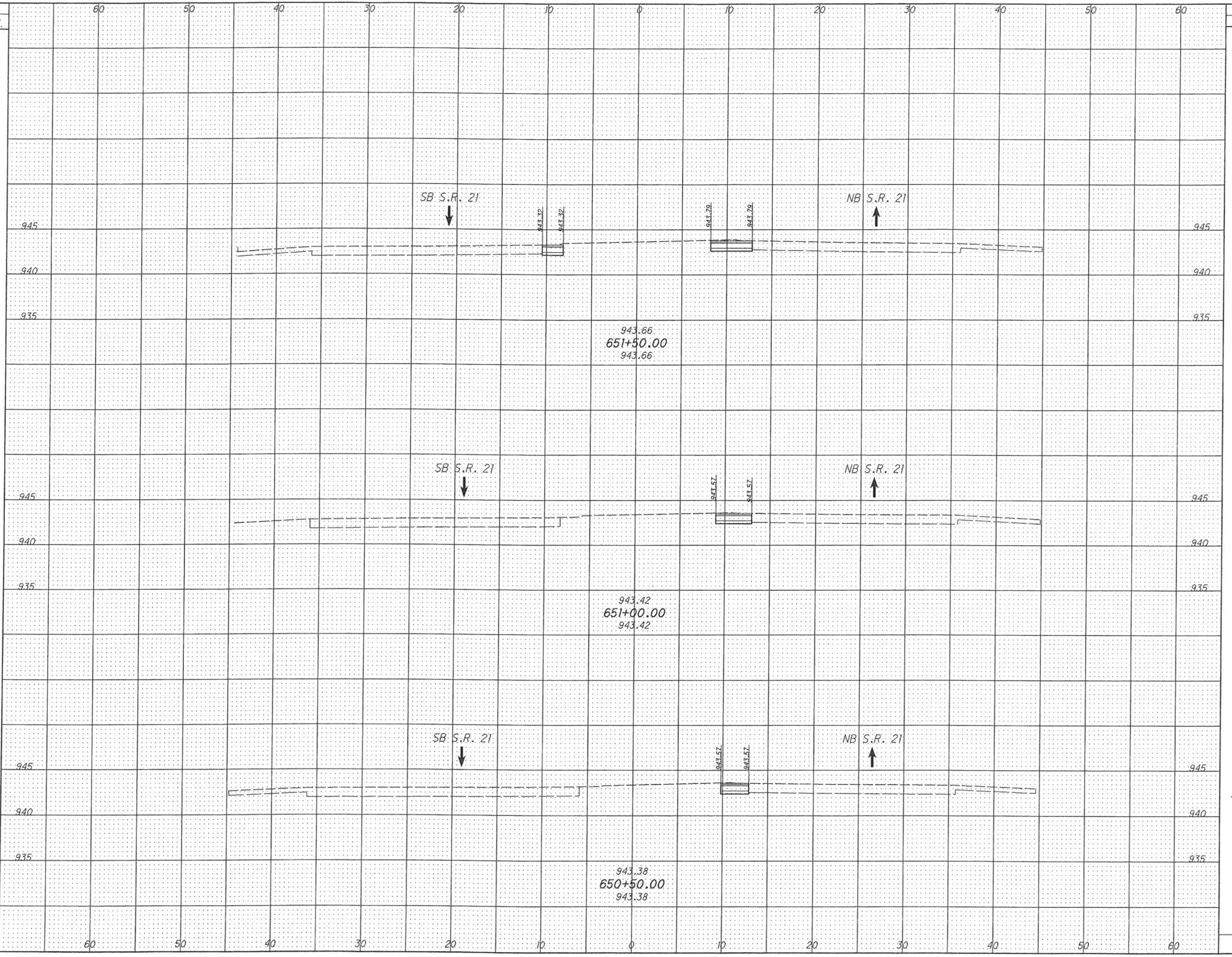

END AREA		VOLUME	
CUT	FILL	CUT	FILL
		20	0
8	0		
		12	0
5	0		
		8	0
4	0		
		40	0

CALCULATED BJE
CHECKED MAH

GPD ASSOCIATES

MAINTENANCE OF TRAFFIC CROSS SECTIONS - CROSSOVERS
STA. 650+50.00 TO STA. 651+50.00

STA-21-12.48

30/48

36/115

\\AKRN01\DATA\CIVIL\2004054\00\STA\25433\MOT\BASEMAPS\25433XS001.DGN
7/27/2006
11:21:21 PM
SVARRECCHIA

SEEDING	
END WIDTH	SQ. YDS.

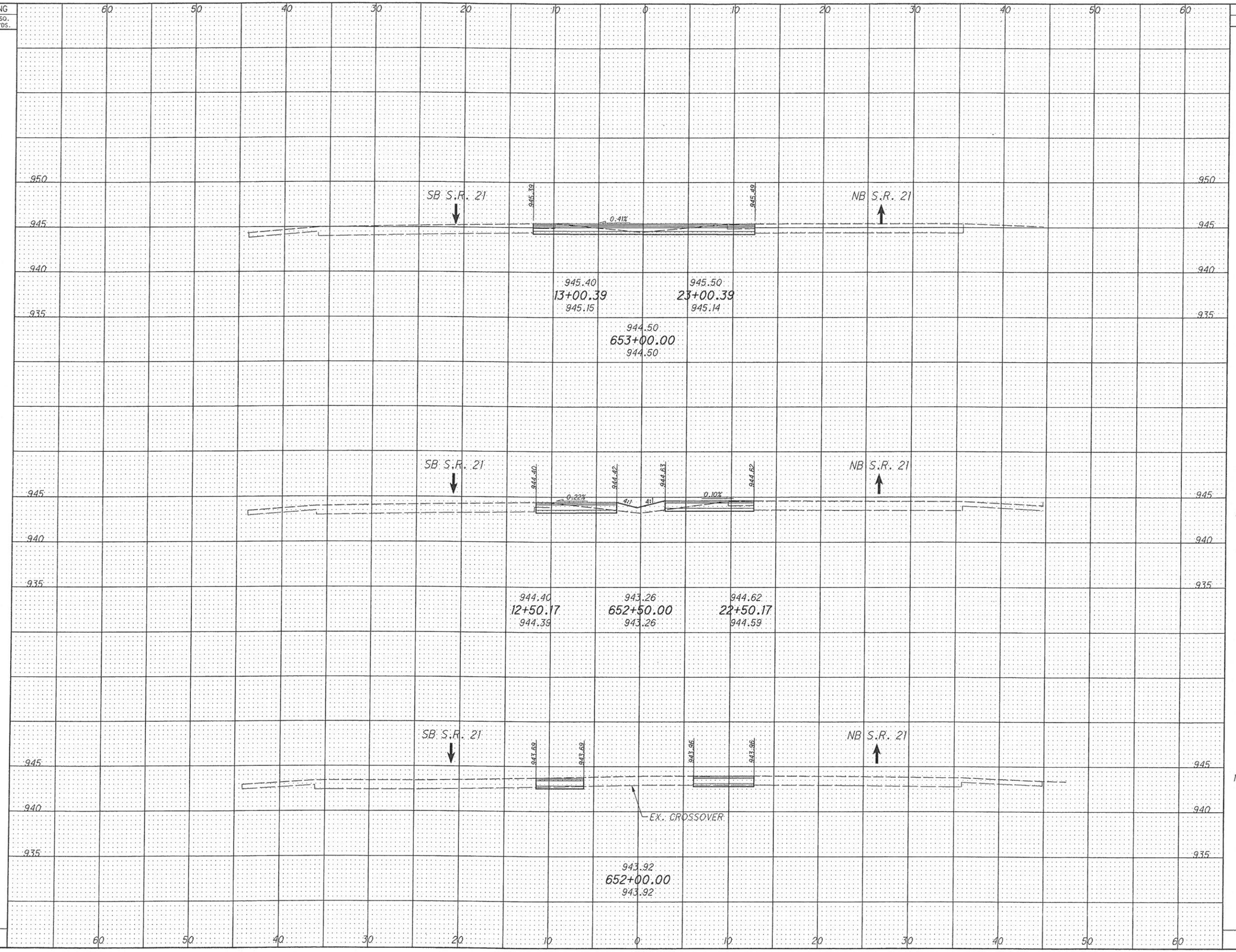

END AREA		VOLUME	
CUT	FILL	CUT	FILL
		32	0
17	0		
		27	4
12	4		
		24	4
14	0		
		83	8

CALCULATED BJE
CHECKED MAH

GPD ASSOCIATES

MAINTENANCE OF TRAFFIC CROSS SECTIONS - CROSSOVERS
STA. 652+00.00 TO STA. 653+00.00

STA-21-12.48

31/48

37/115

\\AKRNB1\DATA\CIVIL\2004054\00\STA\25433\MOT\BASEMAPS\25433XS001.DGN
7/27/2006
4:21:28 PM
SVARRECCHIA-AKRONV8

SEEDING	
END WIDTH	SQ. YDS.

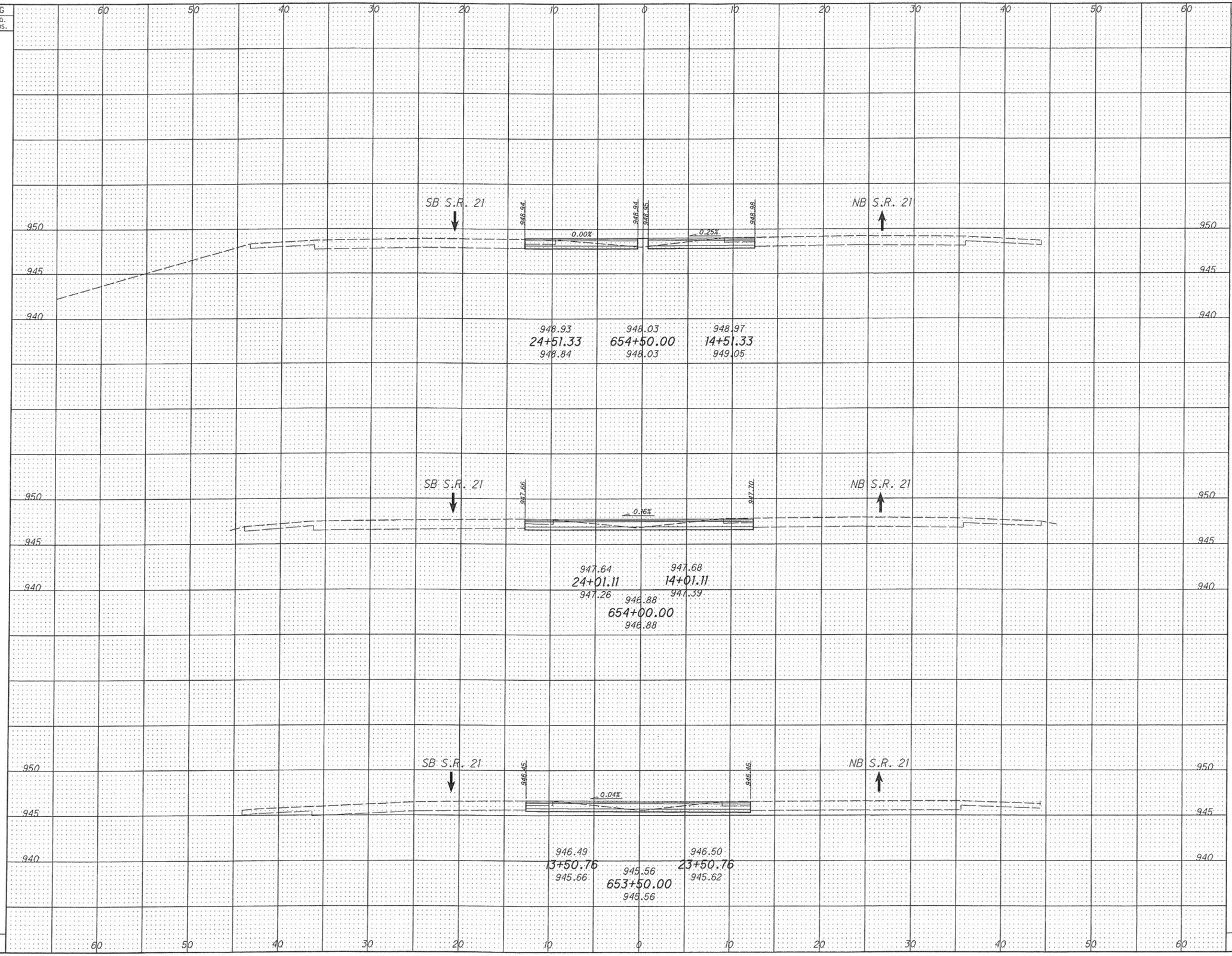

END AREA		VOLUME	
CUT	FILL	CUT	FILL
		28	3
16	1		
		32	0
18	0		
		32	0
17	0		
		92	3

CALCULATED BJE
CHECKED MAH

GPD ASSOCIATES

MAINTENANCE OF TRAFFIC CROSS SECTIONS - CROSSOVERS
STA. 653+50.00 TO STA. 654+50.00

STA-21-12.48

32/48

38/115

\\AKRNAS1\DATA\CIVIL\2004054\08\STA\25433\MOT\BASEMAPS\25433XS001.DGN
7/27/2006
4:21:37 PM
SVARRECCHIA-AKRONW

SEEDING	
END WIDTH	SQ. YDS.

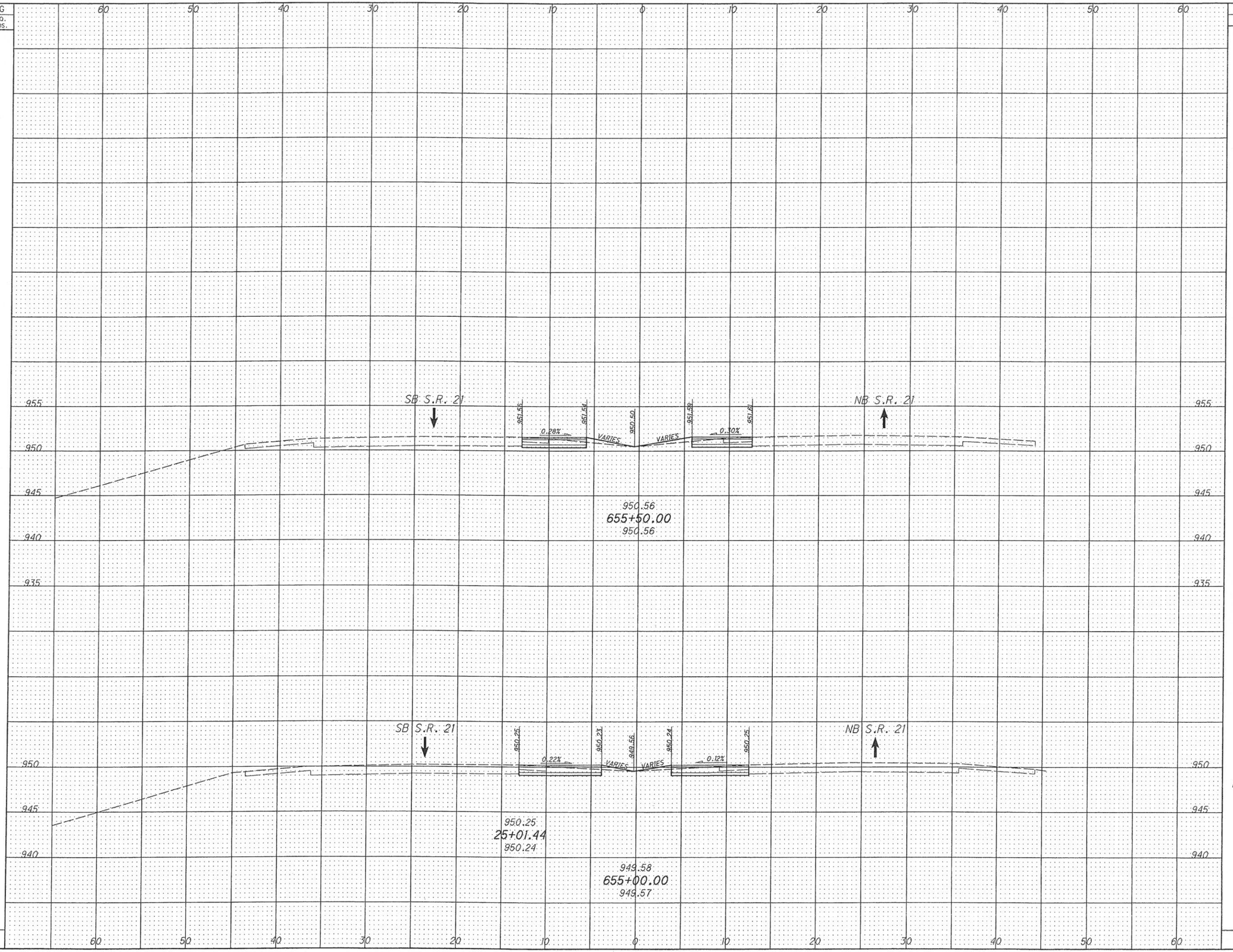

END AREA		VOLUME	
CUT	FILL	CUT	FILL
10	3	18	4
14	2	22	5
		40	9

CALCULATED BJE
CHECKED MAH

GPD ASSOCIATES

MAINTENANCE OF TRAFFIC CROSS SECTIONS - CROSSOVERS STA. 655+00.00 TO STA. 655+50.00

STA-21-12.48

33/48

39/115

\\AKRNO1\DATA\CIVIL\2004054\00\STA\25433\MOT\BASEMAPS\25433XS001.DGN
7/27/2026
4:21:55 PM
SVARRECCHIA-AKRONW8

SEEDING	
END WIDTH	SQ. YDS.

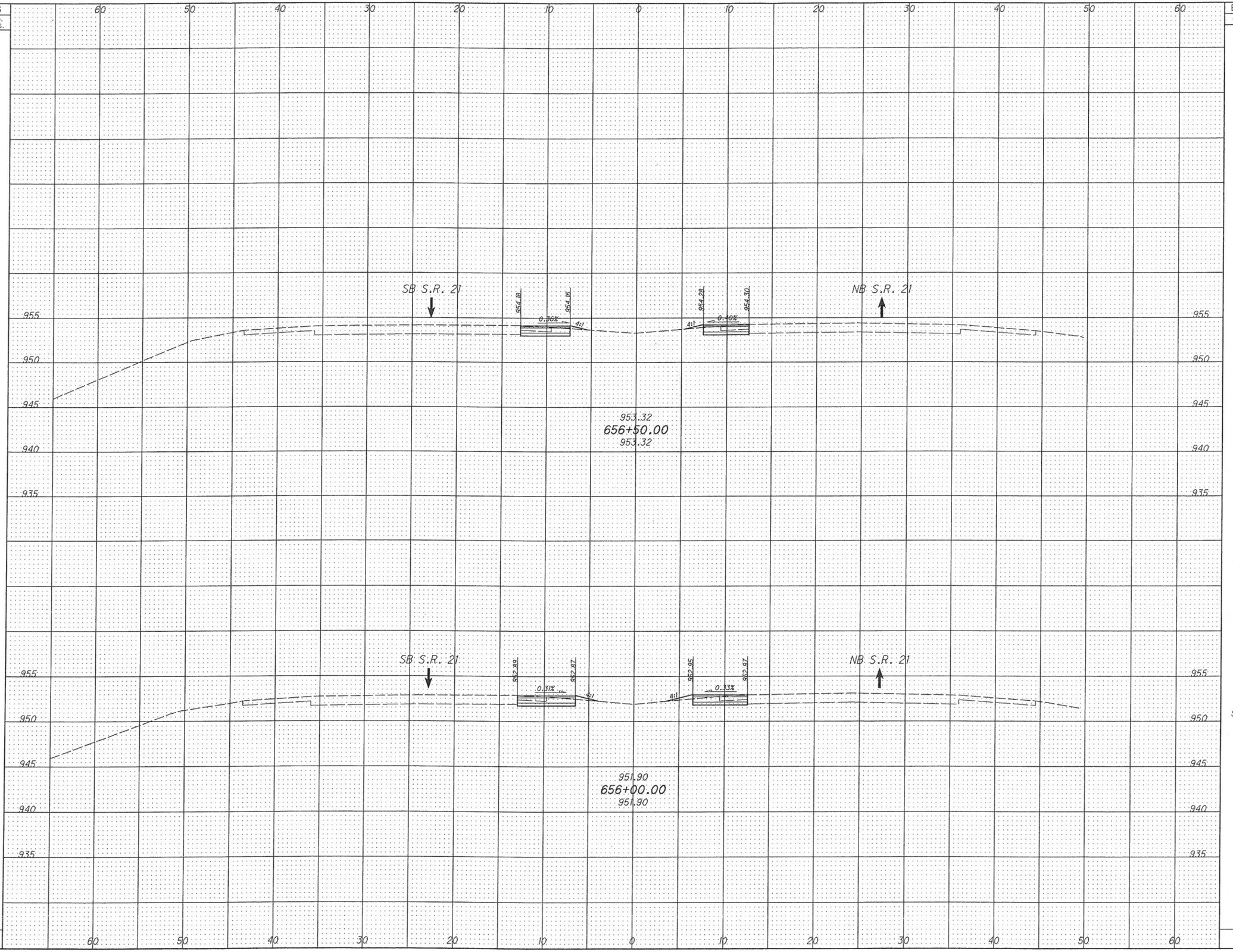

END AREA		VOLUME	
CUT	FILL	CUT	FILL
		12	2
7	1		
		15	2
9	1		
		27	4

CALCULATED BJE CHECKED MAH

GPD ASSOCIATES

MAINTENANCE OF TRAFFIC CROSS SECTIONS - CROSSOVERS STA. 656+00.00 TO STA. 656+50.00

STA-21-12.48

34/48

40/115

\\AKRNB1\DATA\CIVIL\2004054\00\STA\25433\MOT\BASEMAPS\25433XS001.DGN
7/27/2006
4:22:02 PM
SVARRECCHIA-AKRONV8

SEEDING	
END WIDTH	SQ. YDS.

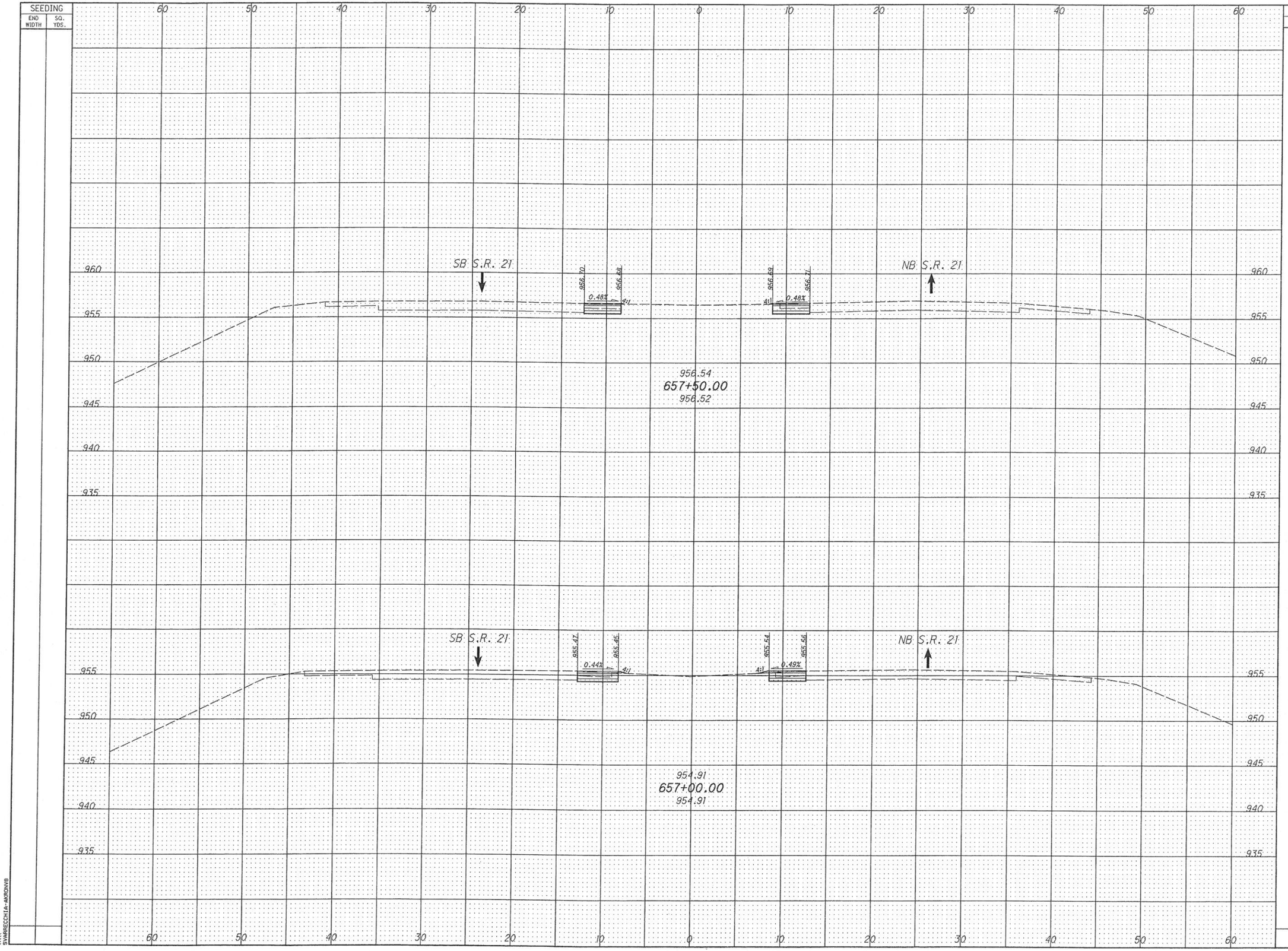

END AREA		VOLUME	
CUT	FILL	CUT	FILL
		8	1
6	1		
		11	2
6	1		
		19	3

CALCULATED BJE
CHECKED MAH

GPD ASSOCIATES

MAINTENANCE OF TRAFFIC CROSS SECTIONS - CROSSOVERS
STA. 657+00.00 TO STA. 657+50.00

STA-21-12.48

35/48

41/115

\\AKRNAS1\DATA\CIVIL\2884054\00\STA\25433\MOT\BASEMAPS\25433XS001.DGN
7/27/2006
4:22:15 PM
SHARRECCHIA+AKRONV8

SEEDING	
END WIDTH	SQ. YDS.

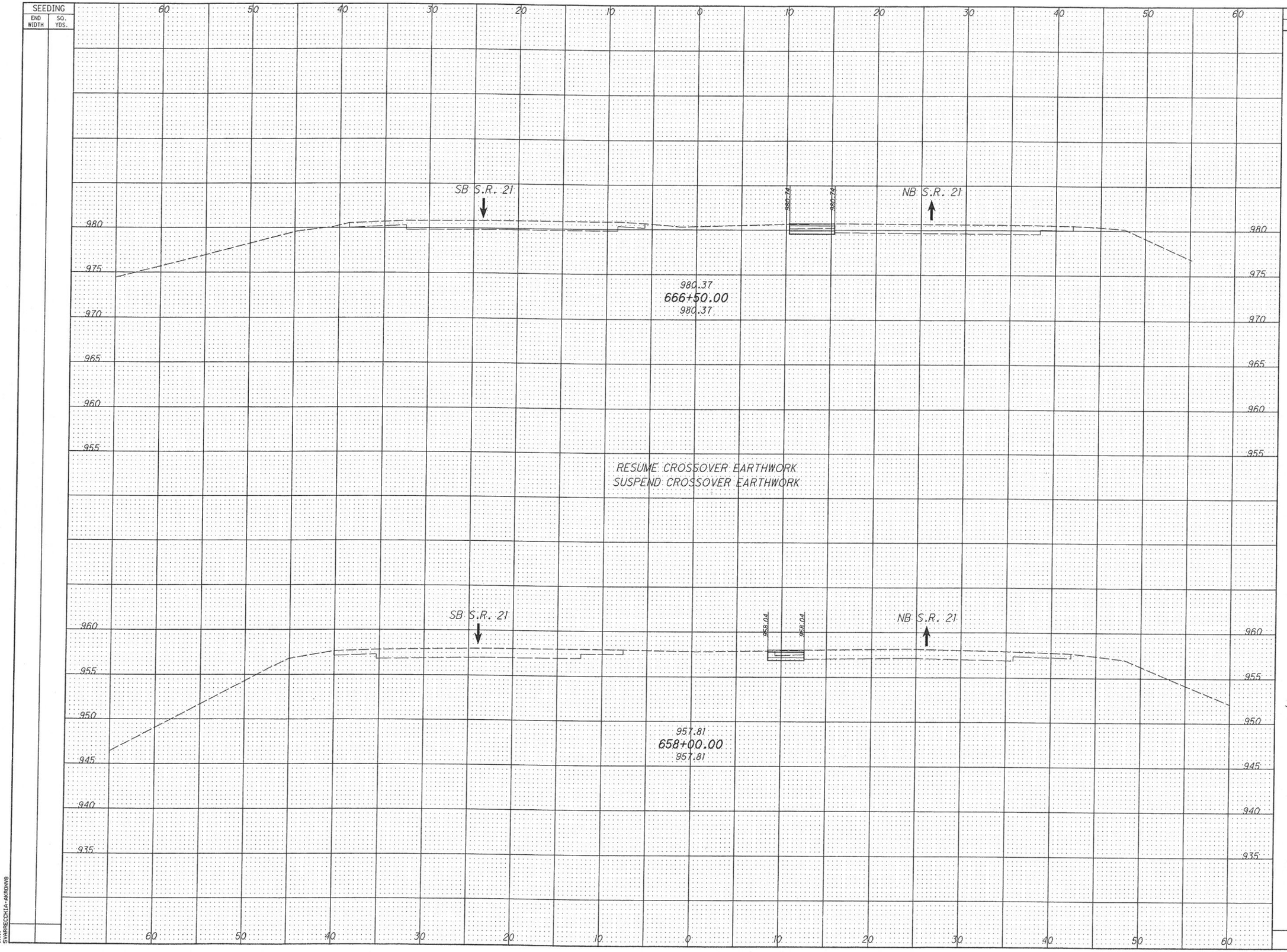

END AREA		VOLUME	
CUT	FILL	CUT	FILL
3	0	8	1
3	0	8	1

CALCULATED B.JE
CHECKED MAH

GPD ASSOCIATES

CROSS SECTIONS - CROSSOVERS

MAINTENANCE OF TRAFFIC CROSSOVERS
STA. 658+00.00 TO STA. 666+50.00

STA-21-12.48

36/48

42/115

\\AKRN01\DATA\CIVIL\2004054\GP\STA\2543\MOT\BASEMAPS\2543XS001.DGN
7/27/2006
4:22:23 PM
SHARRECCHIA-AKRONYB

SEEDING	
END WIDTH	SQ. YDS.

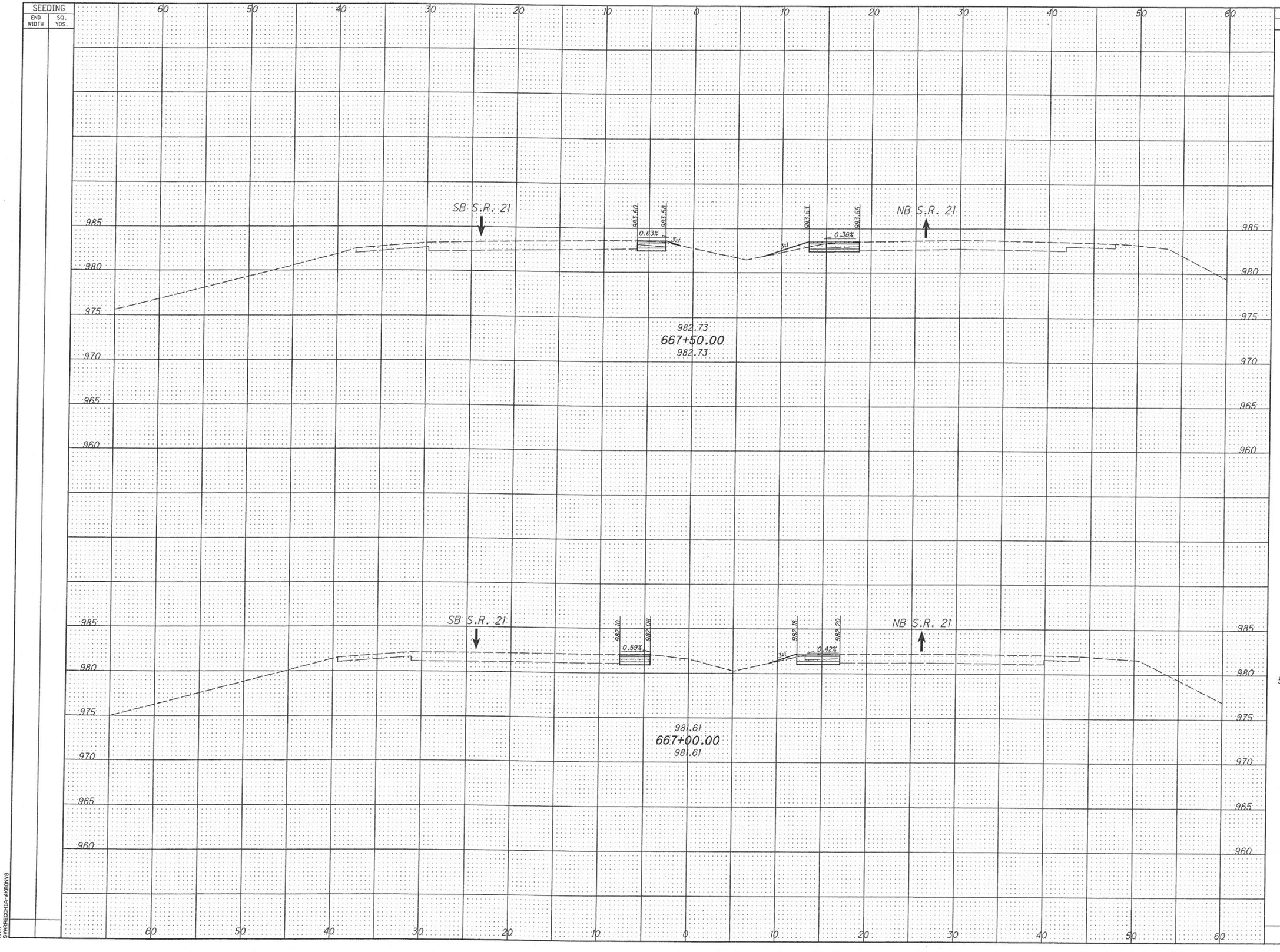

END AREA		VOLUME	
CUT	FILL	CUT	FILL
		6	3
5	2		
		9	3
5	1		
		15	6

CALCULATED BJE
CHECKED MAH

GPD ASSOCIATES

MAINTENANCE OF TRAFFIC CROSS SECTIONS - CROSSOVERS
STA. 667+00.00 TO STA. 667+50.00

STA-21-12.48

37
48

43
115

\\AKRN01\DATA\CIVIL\2004054\GD\STA-25433\MOT\BASEMAPS\25433X3001.DGN
7/27/2006
4:22:31 PM
SWARBECCHIA-AKRON16

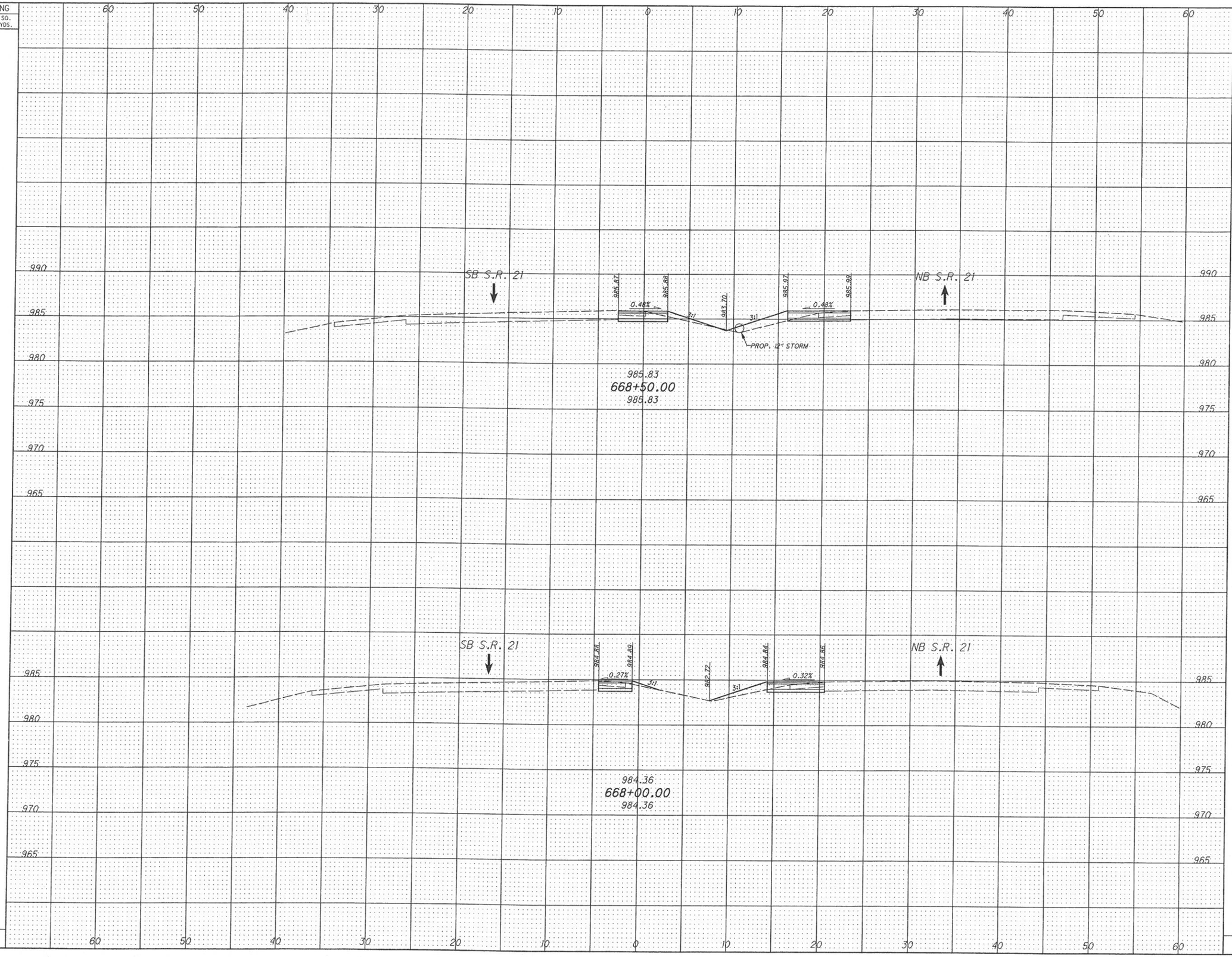

END AREA CUT	END AREA FILL	VOLUME CUT	VOLUME FILL
		15	17
7	7		
		12	10
6	4		
		27	27

CALCULATED BJE
CHECKED MAH

GPD ASSOCIATES

MAINTENANCE OF TRAFFIC CROSS SECTIONS - CROSSOVERS
STA. 668+00.00 TO STA. 668+50.00

STA-21-12.48

38/48

44/115

\\AKRN01\DATA\CIVIL\2004054\00\STA\25433\MOT\BASEMAPS\25433XS001.DGN
7/27/2006
4:22:46 PM
SVARRECCHIA-AKRONV8

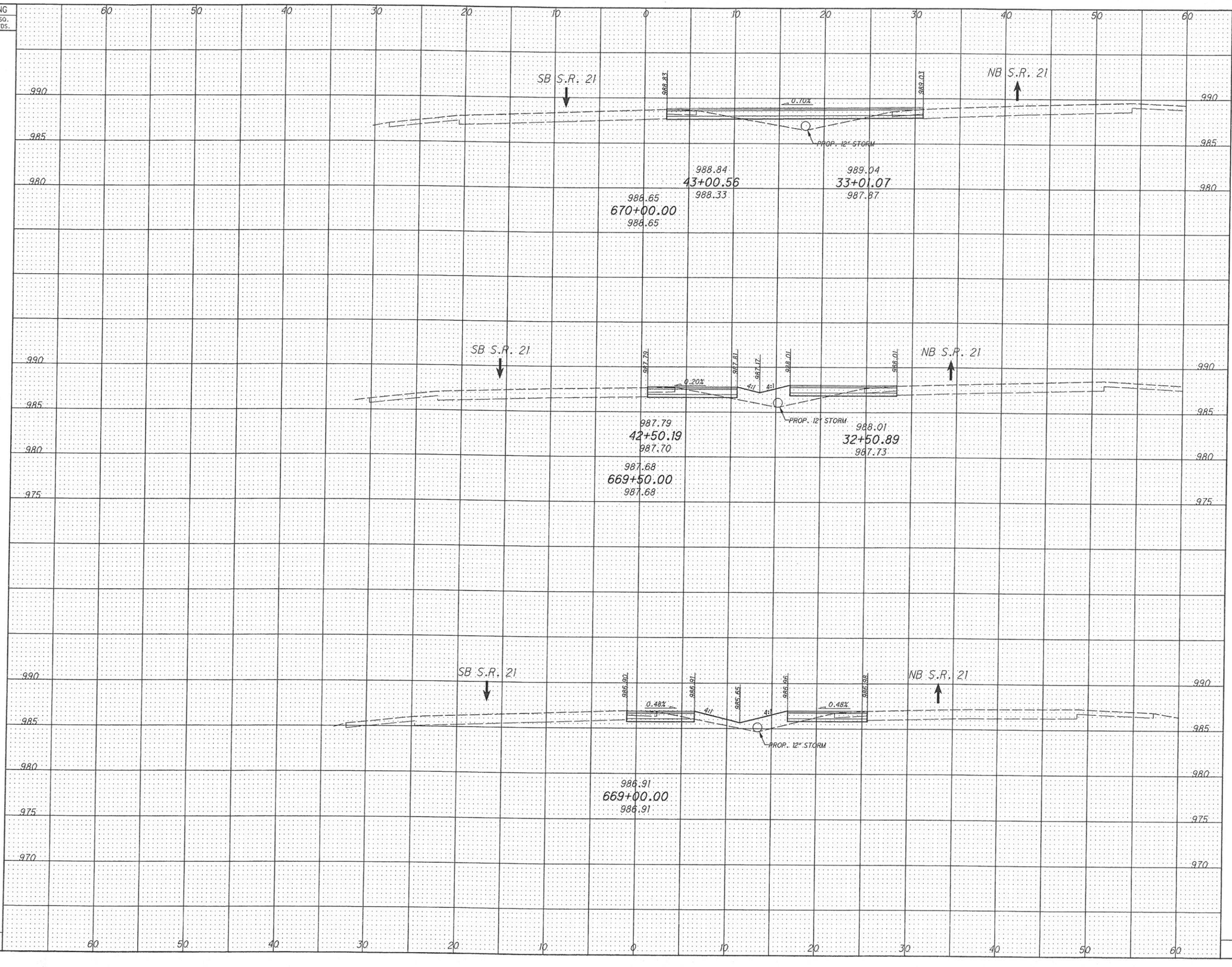

SEEDING END WIDTH	SEEDING SQ. YDS.	END AREA CUT	END AREA FILL	VOLUME CUT	VOLUME FILL
				10	21
		7	9		
				14	19
		8	12		
				16	21
		9	11		
				40	61

CALCULATED BJE
CHECKED MAH

GPD ASSOCIATES

MAINTENANCE OF TRAFFIC CROSS SECTIONS - CROSSOVERS
STA. 669+00.00 TO STA. 670+00.00

STA-21-12.48

39/48

45/115

\\AKRN01\DATA\CIVIL\2004054\00\STA\25433\MOT\BASEMAPS\25433XS001.DGN
7/27/2006
4:22:56 PM
SVARRECCHIA-AKRONVB

SEEDING	
END WIDTH	SQ. YDS.

END AREA		VOLUME	
CUT	FILL	CUT	FILL
		14	30
5	15		
		7	26
3	13		
		7	25
4	14		
		28	81

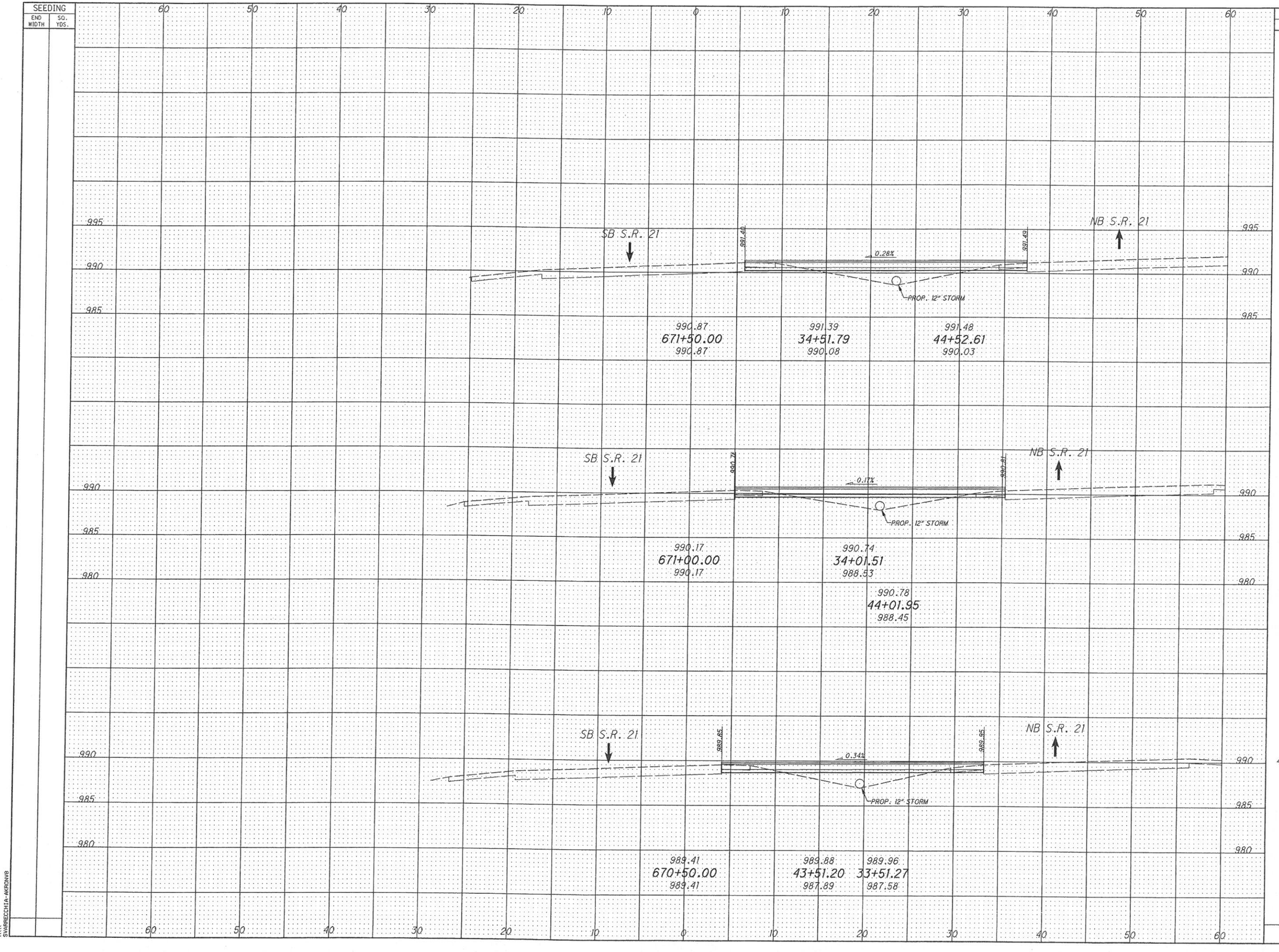

CALCULATED BJE
CHECKED MAH

GPD ASSOCIATES

MAINTENANCE OF TRAFFIC CROSS SECTIONS - CROSSOVERS STA. 670+50.00 TO STA. 671+50.00

STA-21-12.48

40/48

46/115

\\AKRN01\DATA\CIVIL\2004054\69\STA\25433\MOT\BASEMAPS\25433\S001.DGN
7/27/2006
4:23:05 PM
SWARRECCHIA-AKRONV8

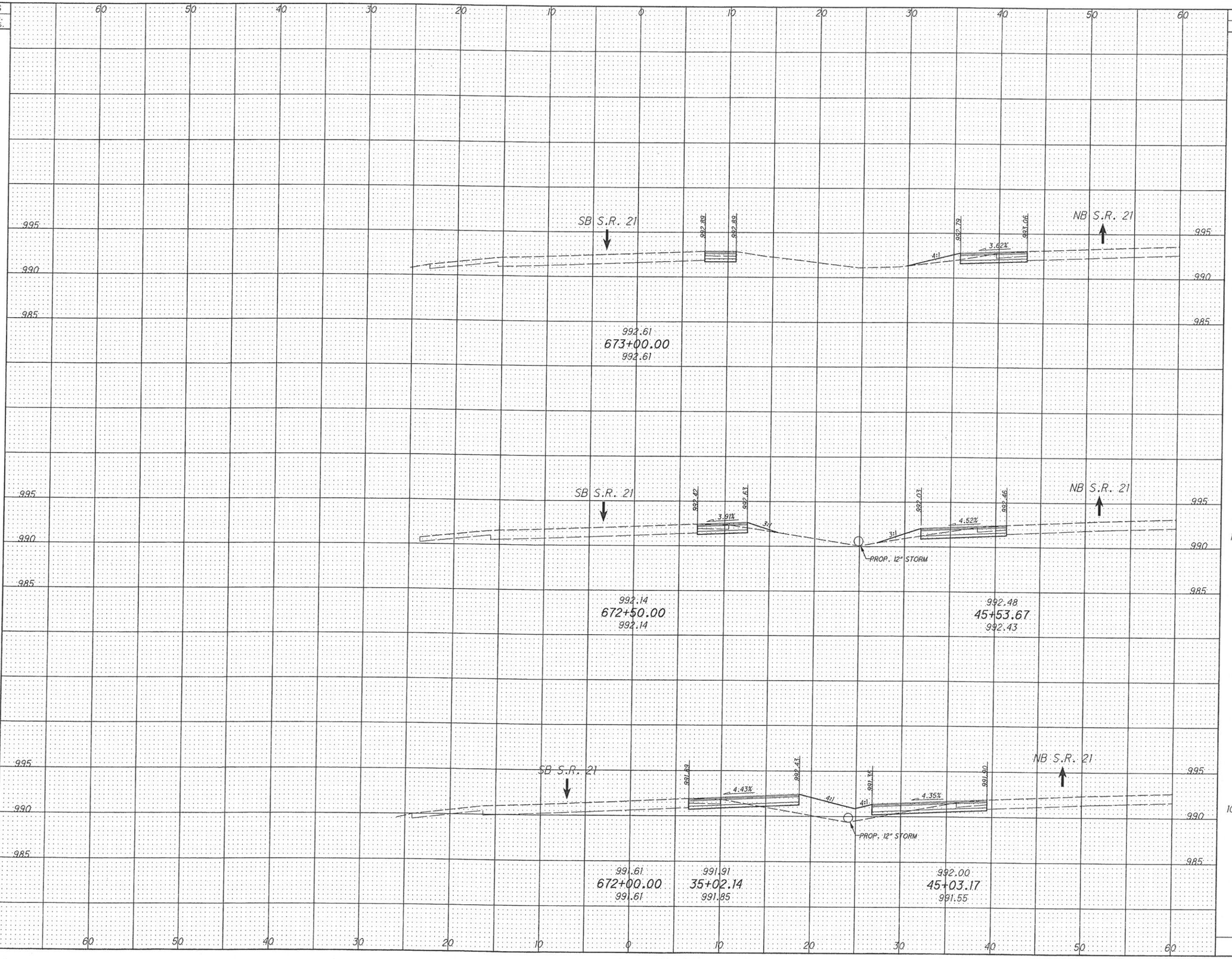

END AREA CUT	END AREA FILL	VOLUME CUT	VOLUME FILL
		10	3
7	2		
		16	5
10	3		
		19	19
10	17		
		45	27

CALCULATED BJE
CHECKED MAH

GPD ASSOCIATES

MAINTENANCE OF TRAFFIC CROSS SECTIONS - CROSSOVERS
STA. 672+00.00 TO STA. 673+00.00

STA-21-12.48

\\AKRN01\DATA\CIVIL\2004054\00\STA\25433\MOT\BASEMAPS\25433XS001.DGN
7/27/2006
4:23:19 PM
SVARRECCHIA-AKRONV8

SEEDING	
END WIDTH	SQ. YDS.

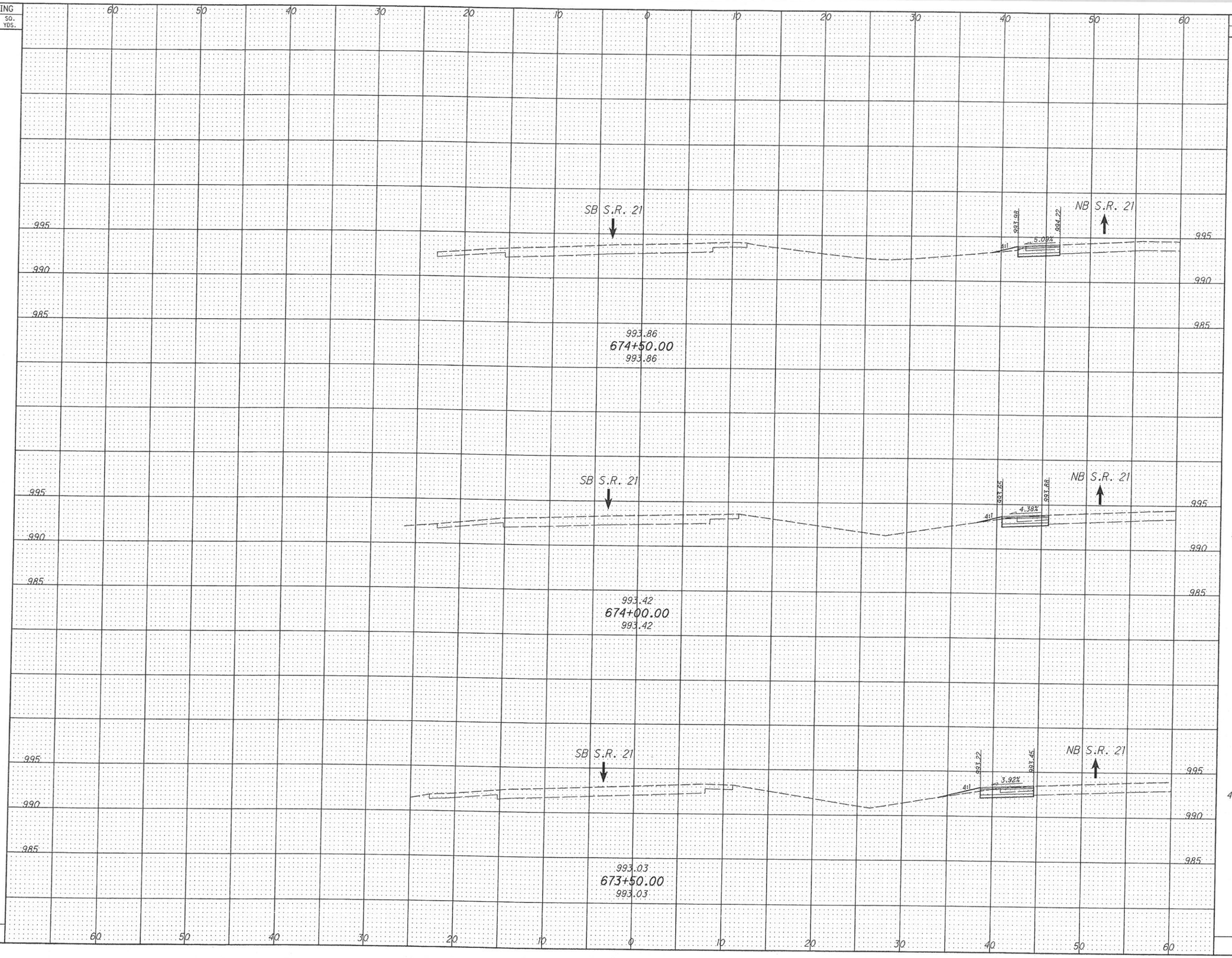

END AREA		VOLUME	
CUT	FILL	CUT	FILL
		6	2
3	1		
		7	2
4	1		
4	1		
		20	6

CALCULATED BJE
CHECKED MAH

GPD ASSOCIATES

CROSS SECTIONS - CROSSOVERS

MAINTENANCE OF TRAFFIC CROSSOVERS
STA. 673+50.00 TO STA. 674+50.00

STA-21-12.48

42/48

48/115

\\AKRNA01\DATA\CIVIL\2004854\02\STA\25433\MOT\BASEMAPS\25433X201.DGN
7/27/2006
4:23:26 PM
SVARRECCHIA-AKRONV8

SEEDING	
END WIDTH	SQ. YDS.

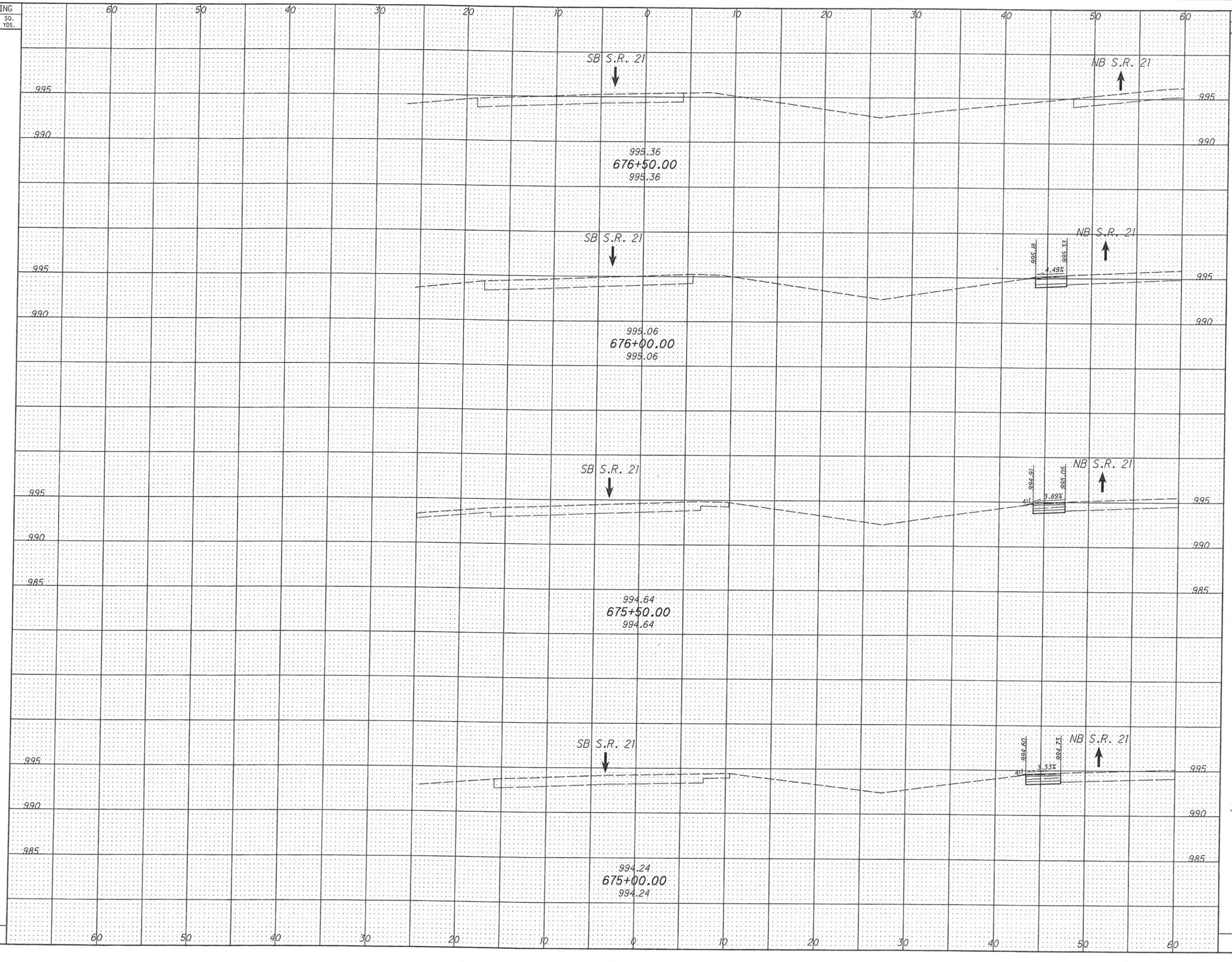

END AREA	
CUT	FILL
0	0
4	1
2	1
3	1
15	5

VOLUME	
CUT	FILL
4	1
6	2
5	2

CALCULATED BJE
CHECKED MAH

GPD ASSOCIATES

MAINTENANCE OF TRAFFIC CROSS SECTIONS - CROSSOVERS STA. 675+00.00 TO STA. 676+50.00

STA-21-12.48

43/48

49/115

\\AKRNB1\DATA\CIVIL\2004054\MBR\STA\25433\MOT\BASEMAPS\25433XS001.DGN
7/27/2005
4:23:34 PM
SHARECHIA-AKRONWB

H:\PROJECTS\2006\2006-0007 STA-21-12_48 PART 2\CIVIL\DRAWINGS\MOT\GPD STAGE 2 DGNS 7-27-06\STAGE 1 ELECTRONIC SUBMITTAL\25433MN009.DGN
7/31/2006
7:54:00 AM
#USER#

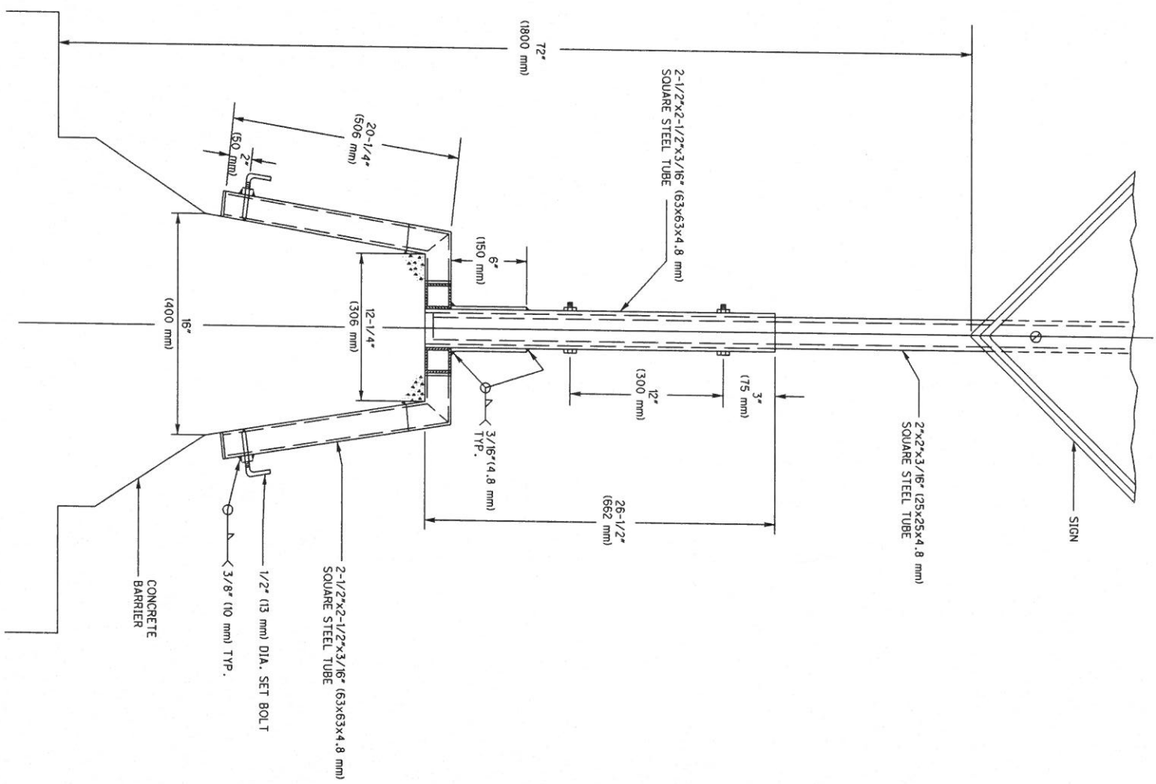

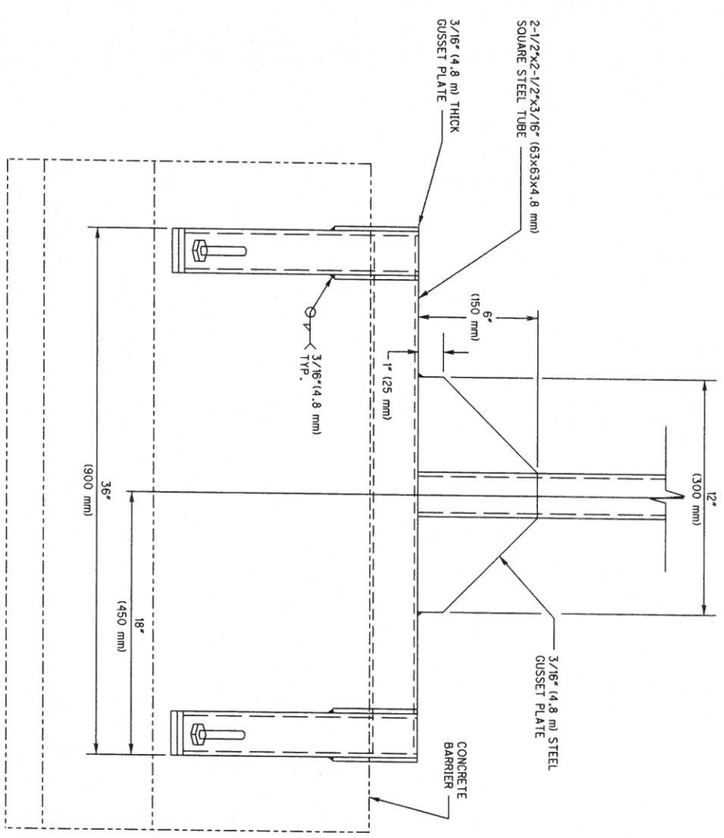

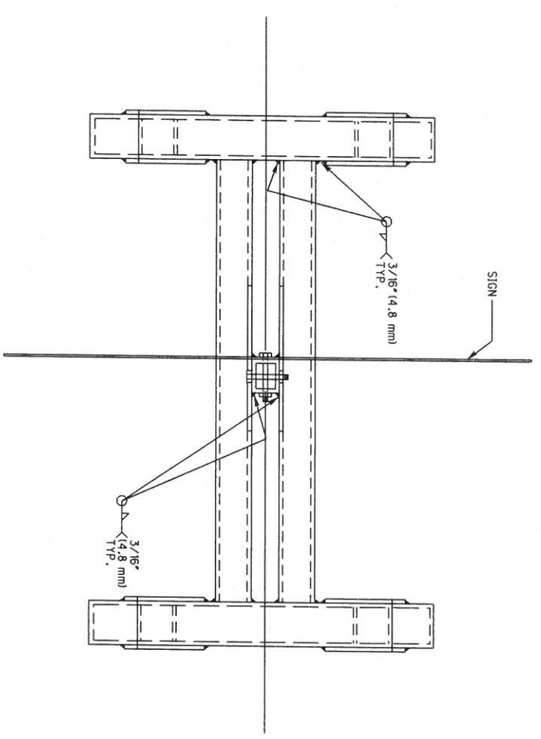

JAM

1/1	202021	OFFICE OF TRAFFIC ENGINEERING	CONCRETE BARRIER MOUNTED SIGN SUPPORT DETAIL, METHOD B	01-18-01

50/115	44/48	STA-21-12.48	PLAN INSERT SHEET	GPD ASSOCIATES	CALCULATED / CHECKED

NOTES

1. The C7x9.8 galvanized steel channel shall be welded to the C15x50 galvanized steel channel.
2. The No. 2 post shall be attached to the C7x9.8 galvanized steel channel with two 5/16" (8 mm) steel hex head bolts. The holes in the C7x9.8 steel channel shall be drilled before galvanizing. The holes shall be 9" (225 mm) center to center.
3. The 5/8" (16 mm) threaded steel bolts shall be attached to the concrete barrier with grout meeting the requiremets of 255.02.

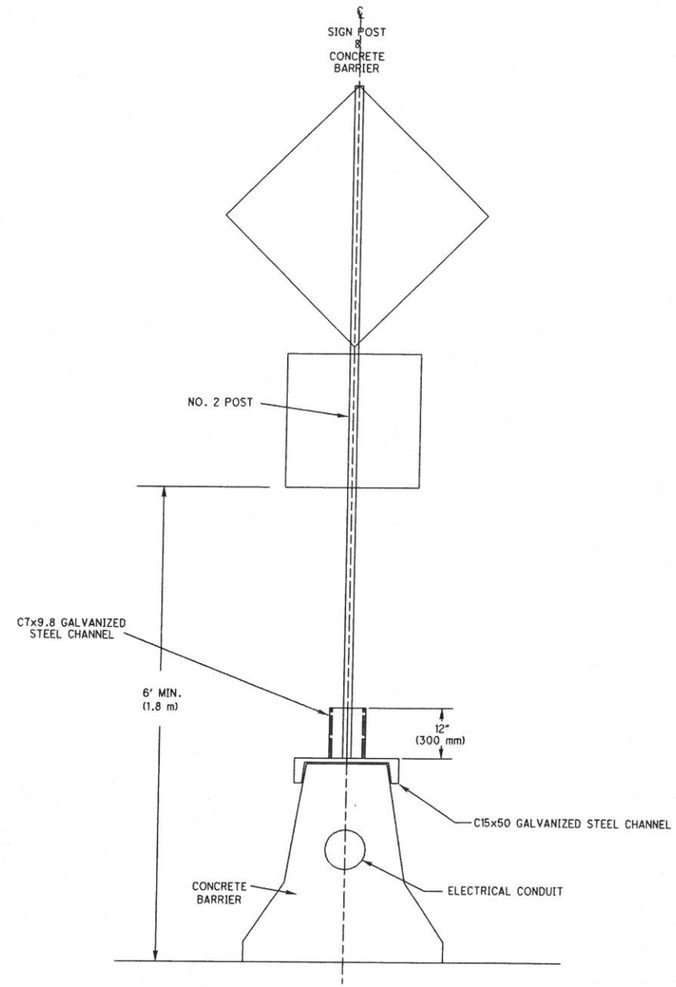

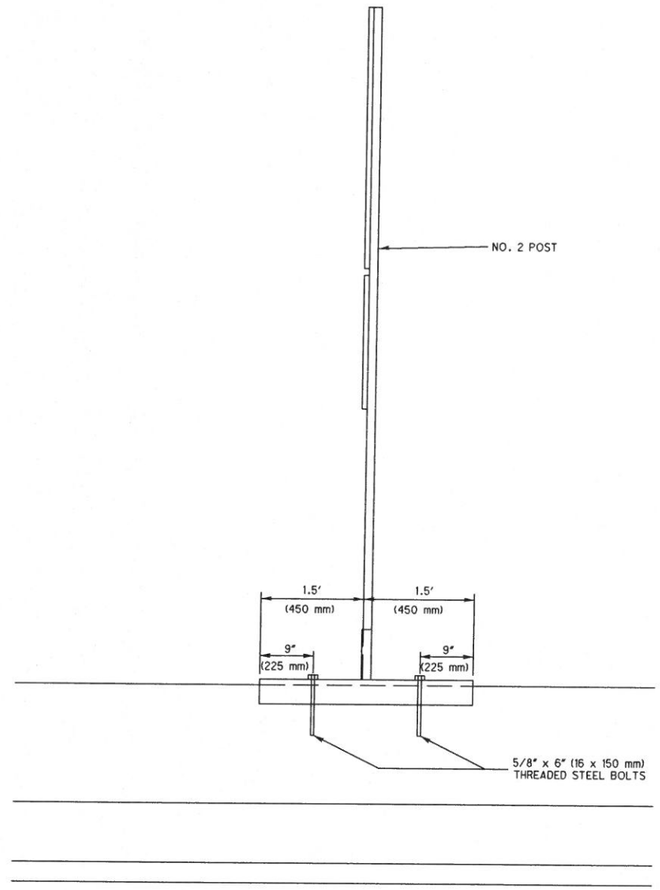

CONCRETE BARRIER MOUNTED SIGN SUPPORT DETAIL METHOD A

01-11-01

OFFICE OF TRAFFIC ENGINEERING

202020

1 / 1

JAM

CALCULATED | CHECKED

GPD ASSOCIATES

PLAN INSERT SHEET

STA-21-12.48

45 / 48

51 / 115

H:\PROJECTS\2006\2006-0007 STA-21-12.48 PART 2\CIVIL\DRAWINGS\MOT\GPD STAGE 2 DGNS 7-27-06\STAGE 1 ELECTRONIC SUBMITTAL\25433NN010.DGN
7/31/2006
7:53:58 AM
#USER#

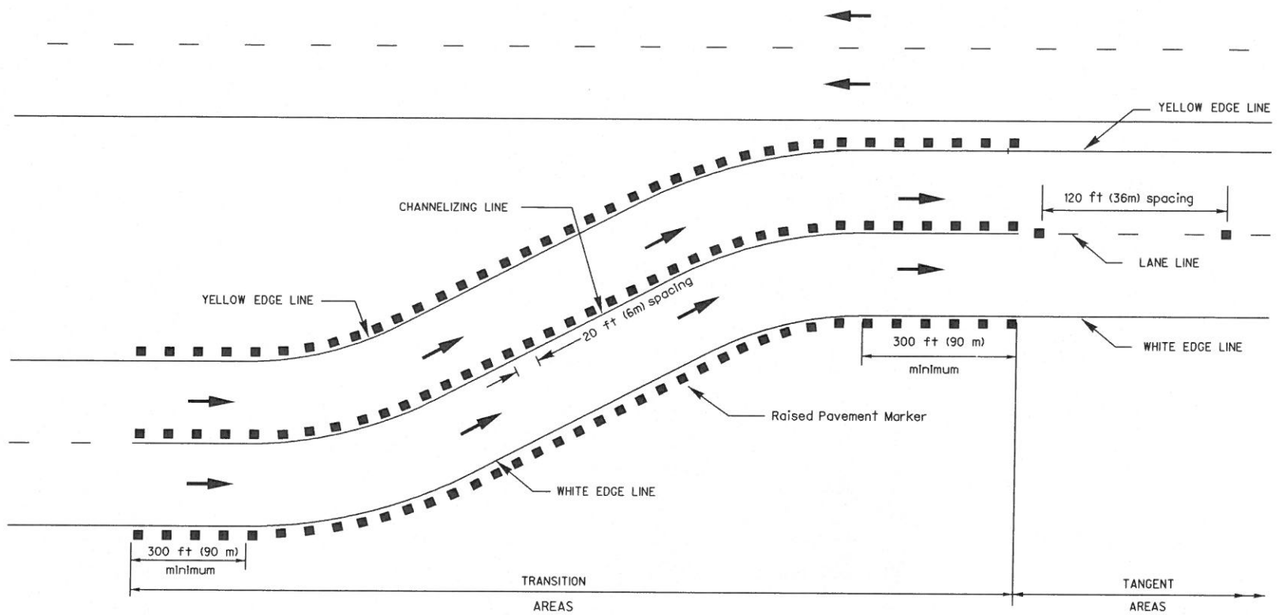

WORK ZONE DELINEATION FOR CROSSOVERS

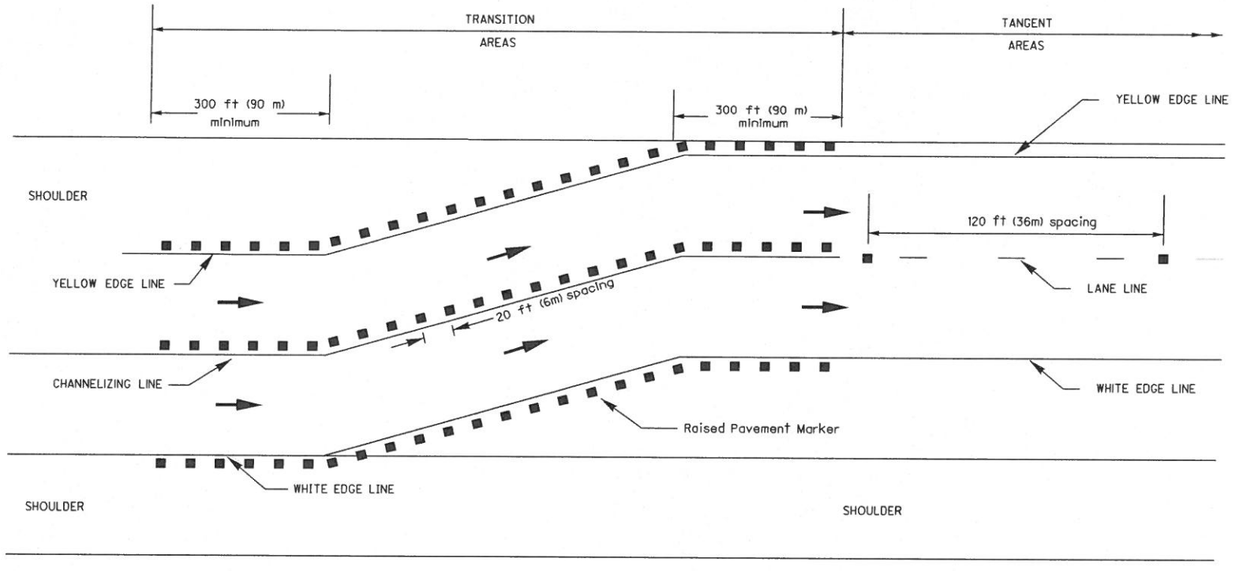

WORK ZONE DELINEATION FOR LANE SHIFTS

LEGEND

- RPM
- DIRECTION OF TRAVEL

NOTES

1. This drawing presents delineation procedures for freeways and expressways on asphalt surfaces. Procedures are provided for transition areas and for tangent areas. The procedures for transition areas apply to crossovers and to lane shifts of 4 feet (1.2 m) or greater. Delineation of transition areas for shifts of less than 4 inches (1.2 m) shall be as per the tangent area delineation.

2. Raised Pavement Markers shall meet the following seasonal specifications:
   a) Raised Pavement Markers in place during the normal construction season may be either 621 Raised Pavement Markers or 614 Work Zone Raised Pavement Markers (WZRPMs). The normal construction season with regard to use of WZRPMs shall be the period from April 1 through October 15.
   b) At locations where it is intended that Raised Pavement Markers will winter over, 621 Raised Pavement Markers shall be provided.
   c) At locations where it is intended that work will continue beyond October 15 but will be completed prior to the beginning of snow-plowing season, 614 WZRPMs may remain in place until such time. Snow-plowing season shall be as specified in the plans. If snow-plowing season is not specified in the plans, it shall be assumed that snow-plowing season runs from October 16 through March 31. If project delays, not the fault of ODOT, cause work to extend into the snow-plowing season, the contractor shall be responsible for replacing WZRPMs with 621 Raised Pavement Markers, as determined by the Engineer, at the contrator's expense.

3. All material furnished shall be listed on the Department's Prequalified Lists.

4. The geometrics of the crossover shall be as shown in the plans. Additional details are provided in Standard Construction Drawing MT-95.70.

5. See Standard Construction Drawings MT-102.10 and MT-102.20 for more details concerning lane shifts.

6. Spacing of raised pavement markers (RPMs) shall be at 20 feet (6 m) center-to-center for all long-line marking within transition areas. Within tangent areas RPMs shall be provided only along the lane lines, spaced at 120 foot (36 m) center-to-center.

7. The RPMs shall be 1-way, facing oncomming traffic, and shall be white or yellow to match the color of the associated line marking.

8. Along the edge lines, the RPMs shall be offset a maximum of 4 inches (100 mm) to the outside of the lines. Along the channelizing lines, the RPMs shall be offset to the left of the lines by no more than 1 inch (25 mm). Along the lane lines the RPMs shall be centered between dashes.

9. The RPMs shall be removed when they are no longer appropriate.

10. Holes resulting from removal of 621 RPMs shall be filled as per 202.10. If removal of the 621 RPMs does not take place immediately after the highlighted alignment becomes invalid, the reflectors within the 621 RPMs shall be removed.

11. Following removal of 621 RPMs resurfacing of the transition shall be performed. The resurfacing shall be performed at the time the surface course is being applied. In preparation for resurfacing, the existing pavement shall be removed to a depth necessary to match the level of the intermediate course of the proposed pavement.

WORK ZONE DELINEATION ON ASPHALT SURFACES

04-21-06

OFFICE OF TRAFFIC ENGINEERING

209930

1 / 1

SHB

CALCULATED

CHECKED

GPD ASSOCIATES

PLAN INSERT SHEET

STA-21-12.48

46 / 48

52 / 115

H:\PROJECTS\2006\2006-0007 STA-21-12-48 PART 2\CIVIL\DRAWINGS\MOT\GPD STAGE 2 DGNS 7-27-06\STAGE 1 ELECTRONIC SUBMITTAL\25433MN006.DGN
7/31/2006
7:53:57 AM
#USER#

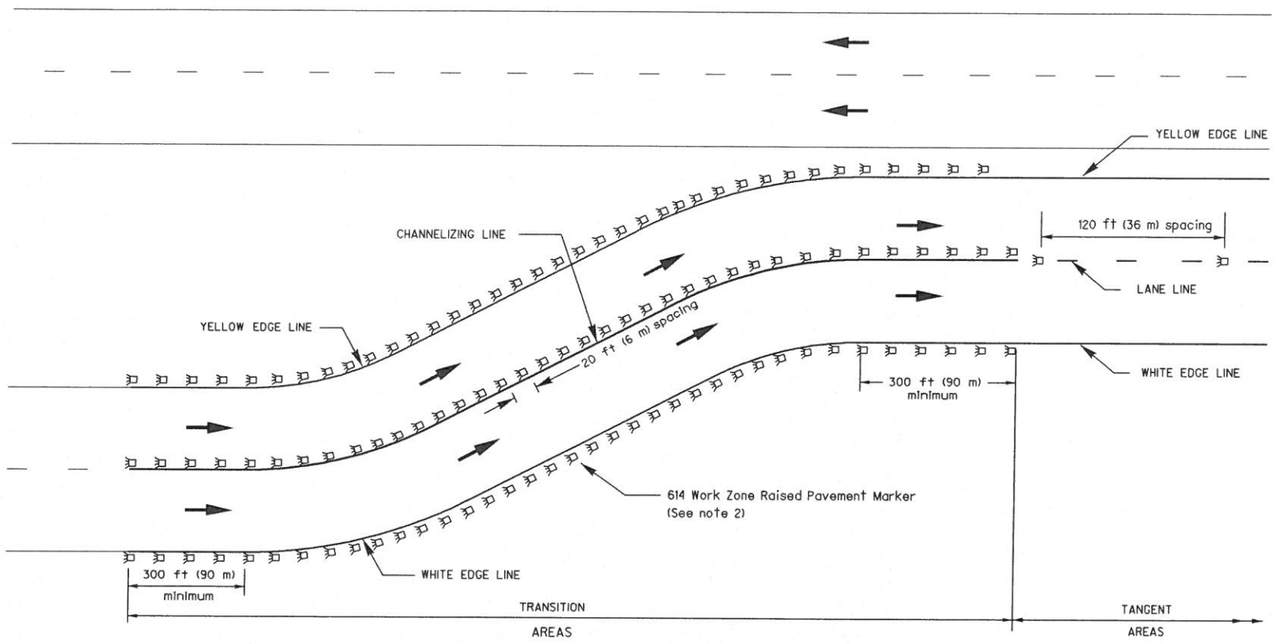

WORK ZONE DELINEATION FOR CROSSOVERS

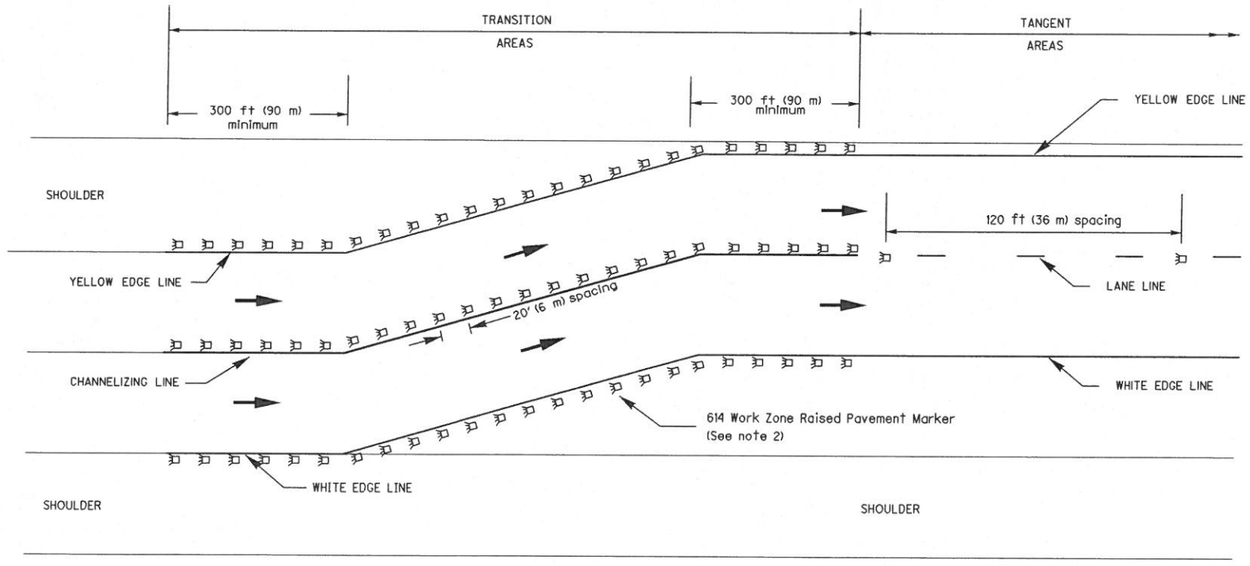

WORK ZONE DELINEATION FOR LANE SHIFTS

NOTES

1. This drawing presents delineation procedures for freeways and expressways on concrete surfaces. Procedures are provided for transition areas and for tangent areas. The procedures for transition areas apply to crossovers and to lane shifts of 4 feet (1.2 m) or greater. Delineation of transition areas for shifts of less than 4 feet (1.2 m) shall be as per the tangent area delineation.
2. The Work Zone Raised Pavement Markers (WZRPMs) shown on this drawing are intended for use only during the non-snow-plowing season. WZRPMs shall not be provided during the snow-plowing season. The snow-plowing season shall be from October 16 through March 31 or as otherwise specified in the plans. Where a temporary alignment will remain in use through the winter, the WZRPMs shall be removed prior the beginning of snow-plowing season and replaced approximately April 1, or as otherwise determined by the Engineer.
3. All material furnished shall be listed on the Department's Qualified Products Lists.
4. The geometrics of the crossover shall be as shown in the plans. Additional details are provided in Standard Construction Drawing MT-95.70.
5. See Standard Construction Drawings MT-102.10 and MT-102.20 for more details concerning lane shifts.
6. Spacing of WZRPMs shall be at 20 feet (6 m) center-to-center for all long-line marking within transition areas. Within tangent areas WZRPMs shall be provided only along the lane lines, spaced at 120 feet (36 m) center-to-center.
7. The WZRPMs shall be 1-way, facing oncoming traffic, and shall be white or yellow to match the color of the associated line marking.
8. Along the edge lines, the WZRPMs shall be offset a maximum of 4 inches (100 mm) to the outside of the lines. Along the channelizing lines, the WZRPMs shall be offset to the left of the lines by no more than 1 inch (25 mm). Along the lane lines the WZRPMs shall be centered between dashes.
9. The WZRPMs shall be removed when they are no longer appropriate.

LEGEND

	WORK ZONE RPM, TYPE A
→	DIRECTION OF TRAVEL

SHB

WORK ZONE DELINEATION ON CONCRETE SURFACES

4-21-06

OFFICE OF TRAFFIC ENGINEERING

209931

1 / 1

CALCULATED | CHECKED

GPD ASSOCIATES

PLAN INSERT SHEET

STA-21-12.48

47 / 48

53 / 115

H:\PROJECTS\2006\2006-0007 STA-21-12.48 PART 2\CIVIL\DRAWINGS\MOT\GPD STAGE 2 DGNS 7-27-06\STAGE 1 ELECTRONIC SUBMITTAL\25433M0007.DGN
7/31/2006
7:53:55 AM
$USER$

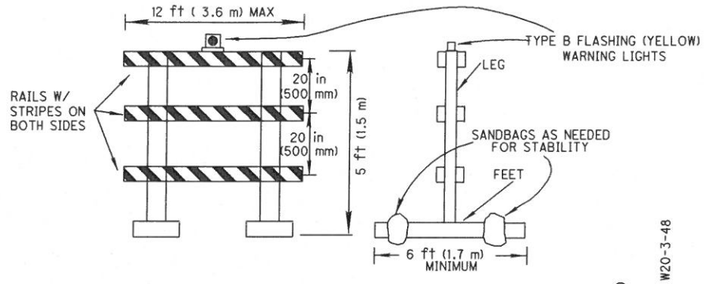

TYPE III BARRICADE DETAIL

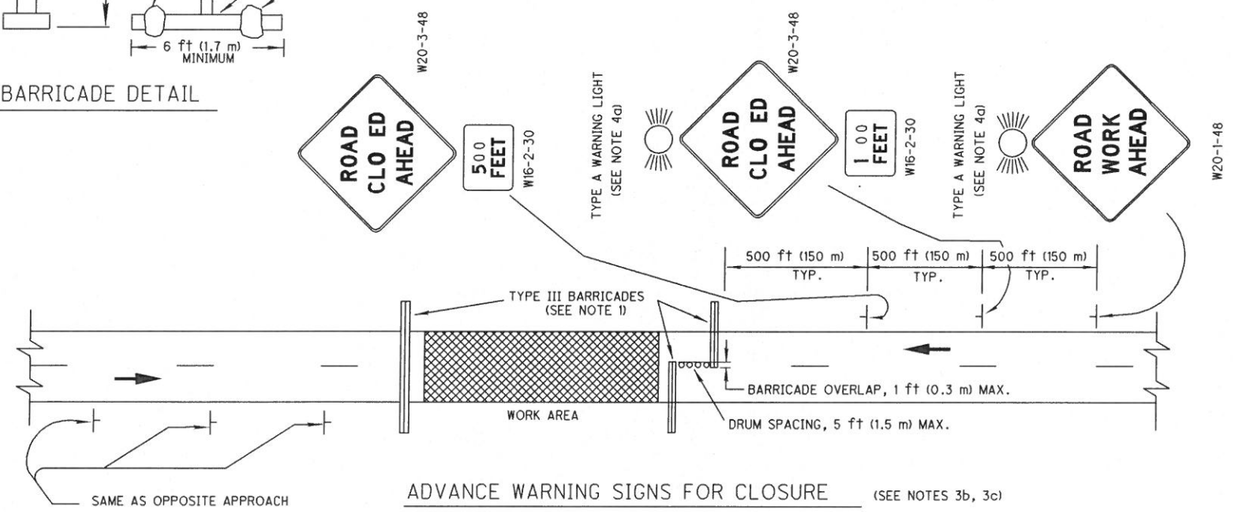

ADVANCE WARNING SIGNS FOR CLOSURE (SEE NOTES 3b, 3c)

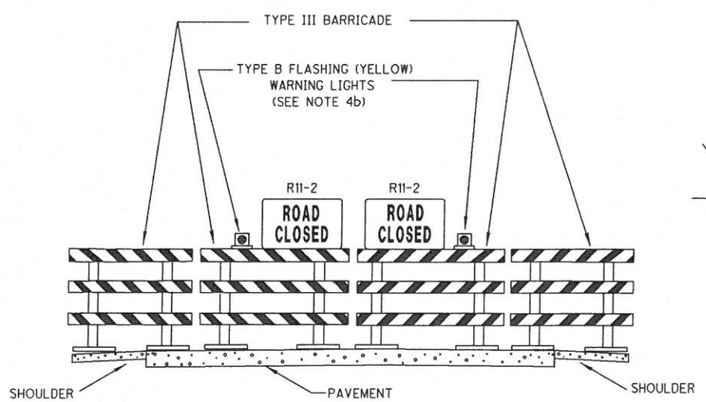

BARRICADE CLOSURE PROFILE

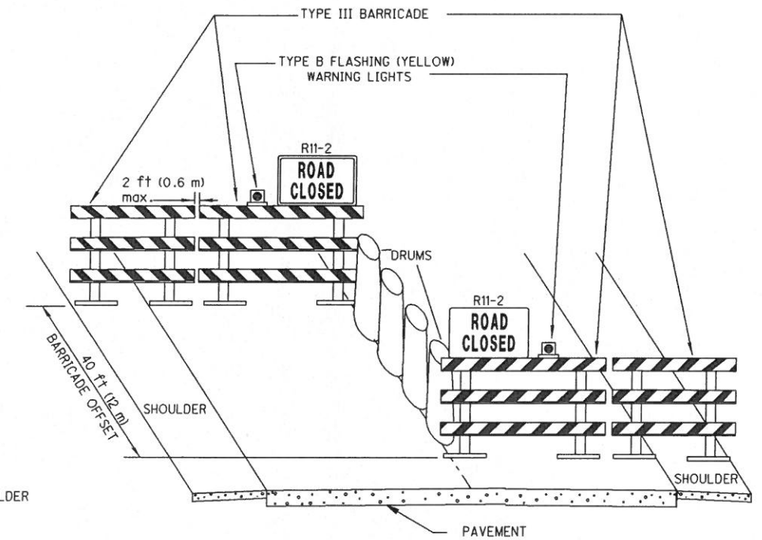

BARRICADE CLOSURE OFFSET OPTION

NOTES

1. BARRICADE USE

   a. Barricades shall be NCHRP 350 compliant and shall be erected according to details shown. When the road is closed to traffic, barricades shall be used to effectively close the entire roadway, including the paved or aggregate shoulder.

   b. Barricades along adjacent lanes may be offset from each other as shown, with drums used to close the resulting gap. Maximum drum spacing shall be 5 feet (1.5 m).

2. BARRICADE REFLECTORIZATION AND COLOR

   a. In construction or maintenance areas, all rails of the barricades shall be reflectorized with orange and white reflectorized Type G sheeting in 6 inches (150 mm) wide alternate stripes which slope downward toward the center line of the road at an angle of 45 degrees. All three rails of the barricade shall be striped on both sides. Legs and feet shall be either all-white or may display the natural color of the material used.

   b. Barricades used in permanent or semi-permanent applications shall differ only in that they shall use red and white stripes.

3. SIGNS

   a. Where the road is closed to traffic by the erection of barricades, ROAD CLOSED (R11-2) signs shall be mounted as shown.

   b. The Advance Warning Signs shown on this drawing are intended for use when the travelled way is brought to an end with no direction given to traffic. Where traffic has been directed from the permanent roadway at or just in advance of the barricades, advance signing should be provided as shown in SCD MT-95.70 or OMUTCD Figure 6H-7 as appropriate.

   c. The Advance Warning Signs shall be placed on both sides of the roadway for 4-lane divided highways or when required by the plans.

4. FLASHING WARNING LIGHTS

   a. Type A Flashing Warning Lights are required on the ROAD WORK AHEAD (W20-1) sign and on the first ROAD CLOSED AHEAD (W20-3) sign.

   b. Type B Flashing Warning Lights shall be provided on Type III Barricades, one light per each closed lane. Each light shall be conspicuously visible at all distances up to 1000 feet (300 m) under normal atmospheric conditions. The light shall be in operation at all times during the period the highway is closed.

5. OPERATION ON 2-LANE 2-WAY ROADWAYS

   a. Where the barricade runs across the entire roadway without longitudinally offsetting sections, the Contractor will normally open only the left side of the barricade as necessary to allow the construction vehicle to enter, and then shall immediately close it. The entire barricade will not normally be opened at the same time. The Contractor shall assign an employee to assure that the barricade is closed at the end of each workday.

   b. Where the sections of the barricade are offset from each other with drums provided to close the gap (see note 1b), the contractor may move the drums as necessary to allow the construction vehicle to enter, and then shall immediately replace the drums. The contractor shall assign an employee to assure that the drums are in place at the end of each workday.

ROAD CLOSURE USING TYPE III BARRICADES

4-21-06

OFFICE OF TRAFFIC ENGINEERING

2010160

1 / 1

SHB/LAM

CALCULATED | CHECKED

GPD ASSOCIATES

PLAN INSERT SHEET

STA-21-12.48

48 / 48

54 / 115

H:\PROJECTS\2006\2006-0007 STA-21-12.48 PART 2\CIVIL\DRAWINGS\MOT\GPD STAGE 2 DGNS 7-27-06\STAGE 1 ELECTRONIC SUBMITTAL\25433#N008.DGN
7/31/2006
7:53:54 AM
$USER$

H:\Projects\2006\2006-0007 STA-21-12_48 Part 2\Civil\Drawings\Plan and Profile\25433GP001.dgn 7/31/2006 11:59:20 AM

25433GP001.dgn

CROSS REFERENCES	
DESCRIPTION	SHEET
℄ CONTROL AND REFERENCES	6/115

910 920 930 940 950 960 970

PROFILE (ALONG ℄ N.B. S.R.21)

944.30 (NB) 944.19 (SB)

944.24 (NB) 944.12 (SB)

944.19 (NB) 944.01 (SB)

944.15 (NB) 943.88 (SB)

648

646+00

℄ CONSTR. SR 21

POT 646+99.92

647+00

LAKE ROAD

N 25° 58' 30" W

648+00

649

MATCH LINE STA. 649+00

LEGEND

Ⓜ EXISTING ℄ MONUMENT BOX

REF NO.	STATION FROM	STATION TO	SIDE
TOTALS CARRIED TO GENERAL SUMMARY			

55 115

STA-21-12.48

PLAN AND PROFILE

STA. 646+00.00 TO STA. 649+00.00

CALCULATED CLP

CHECKED RWE

0 10 20 40

HORIZONTAL SCALE IN FEET

N

H:\Projects\2006\2006-0007 STA-21-12_48 Part 2\Civil\Drawings\Plan and Profile\25433GP002.dgn 7/31/2006 11:59:18 AM

25433GP002.dgn

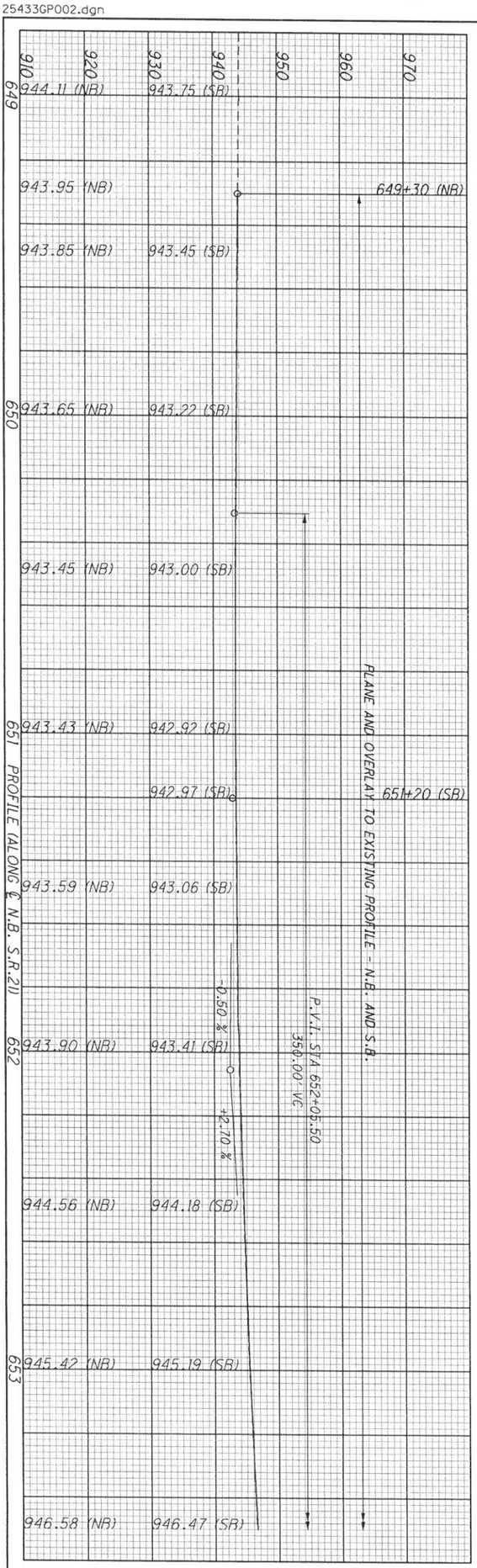

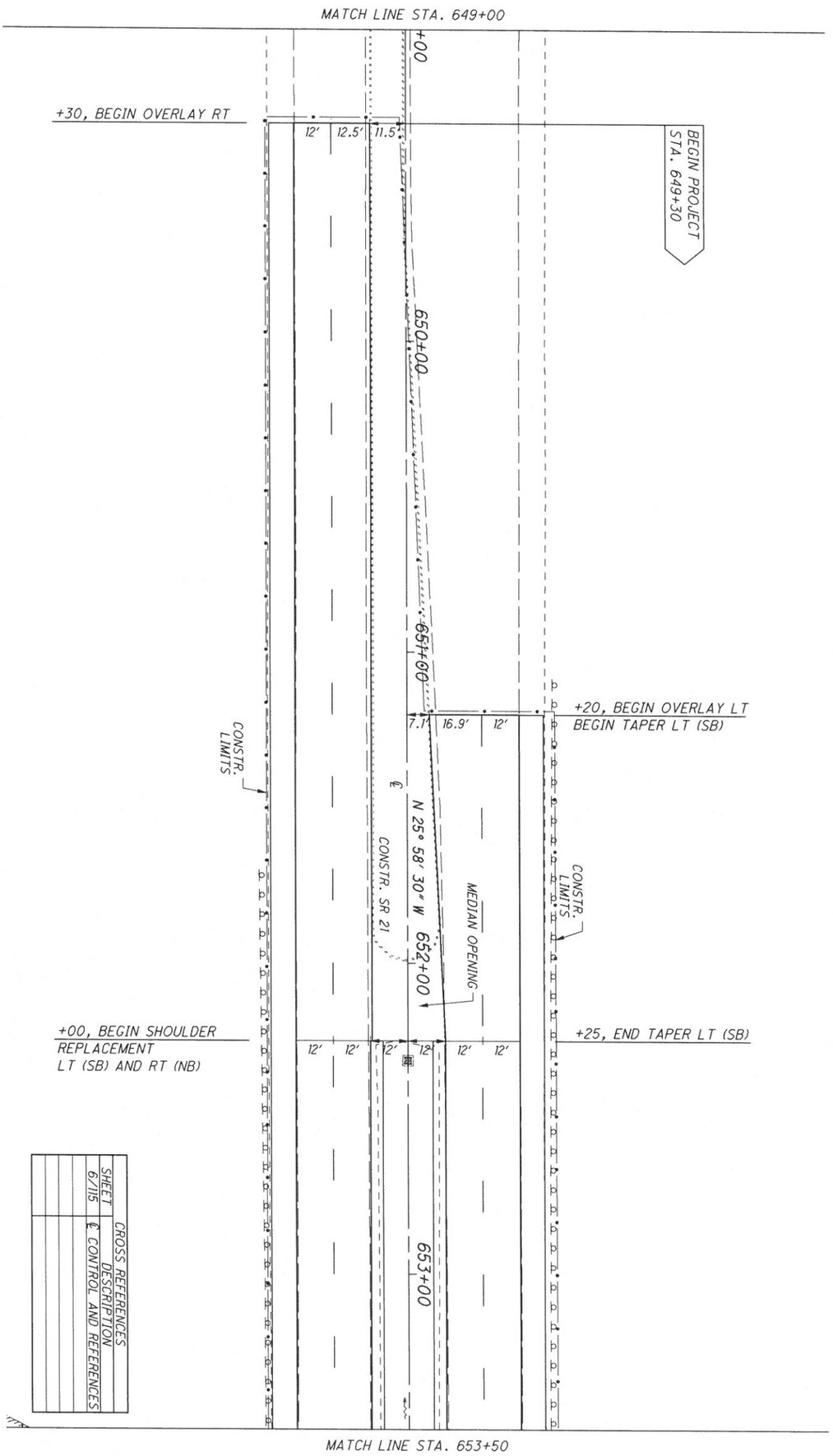

CROSS REFERENCES	
℄ CONTROL AND REFERENCES	DESCRIPTION
	SHEET 6/115

REF NO.	STATION		SIDE
	FROM	TO	
TOTALS CARRIED TO GENERAL SUMMARY			

115 / 56	STA-21-12.48	PLAN AND PROFILE STA. 649+00.00 TO STA. 653+50.00	CALCULATED CLP CHECKED RWE	0 20 10 40 HORIZONTAL SCALE IN FEET

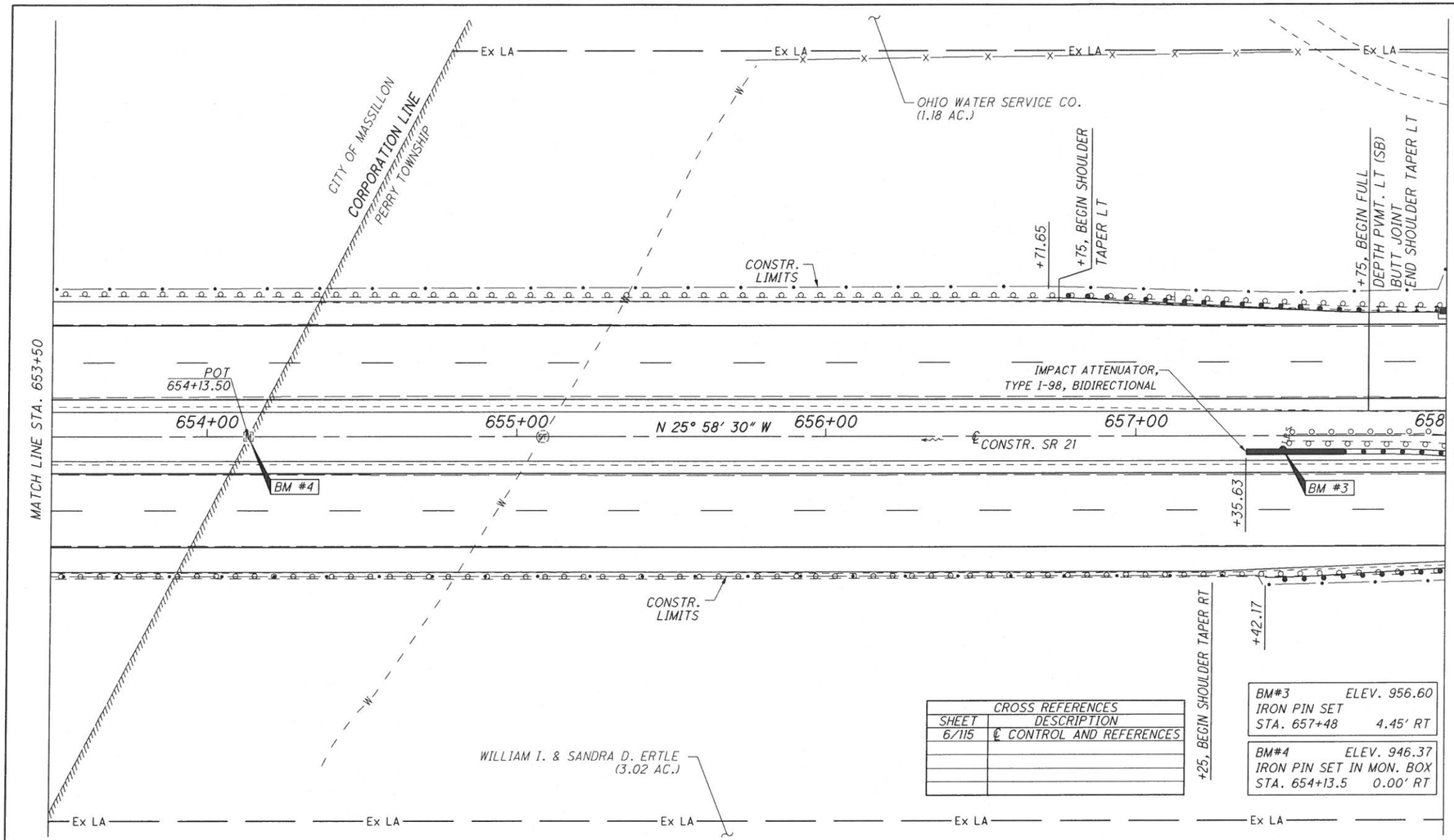

CROSS REFERENCES	
SHEET	DESCRIPTION
6/115	℄ CONTROL AND REFERENCES

BM#3 ELEV. 956.60
IRON PIN SET
STA. 657+48 4.45' RT

BM#4 ELEV. 946.37
IRON PIN SET IN MON. BOX
STA. 654+13.5 0.00' RT

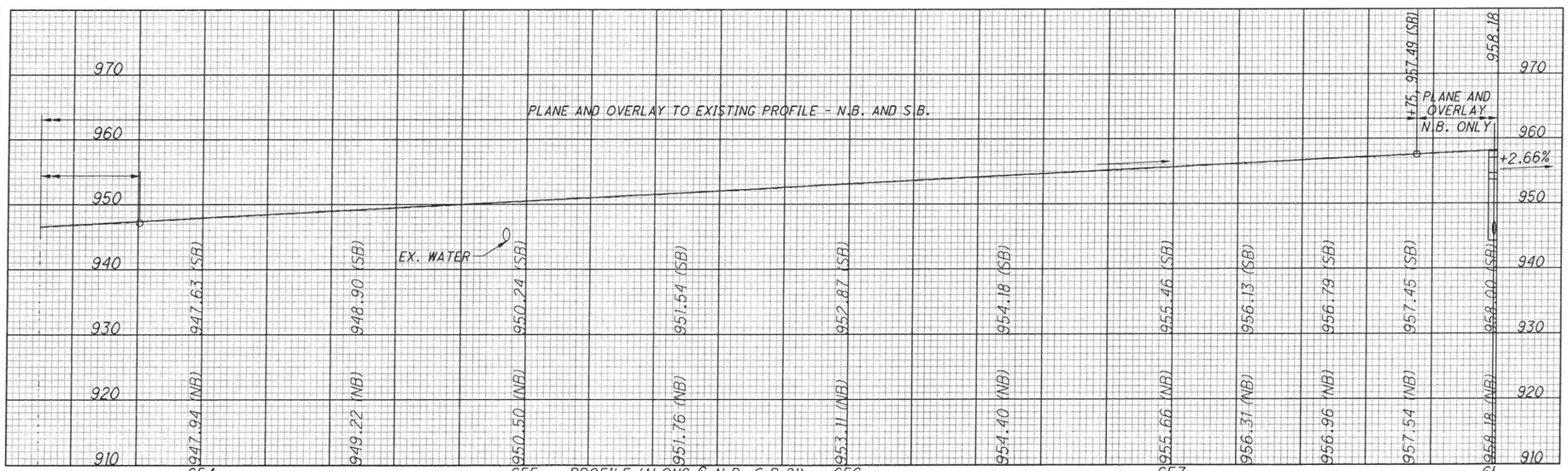

REF NO.	STATION FROM	STATION TO	SIDE

TOTALS CARRIED TO GENERAL SUMMARY

CALCULATED CLP
CHECKED RWE

0 10 20 40 HORIZONTAL SCALE IN FEET

PLAN AND PROFILE
STA. 653+50.00 TO STA. 658+00.00

STA-21-12.48

57
115

H:\Projects\2006\2006-0007 STA-21-12.48 Part 2\Civil\Drawings\Plan and Profile\25433GP003.dgn
7/31/2006 11:59:16 AM
25433GP003.dgn

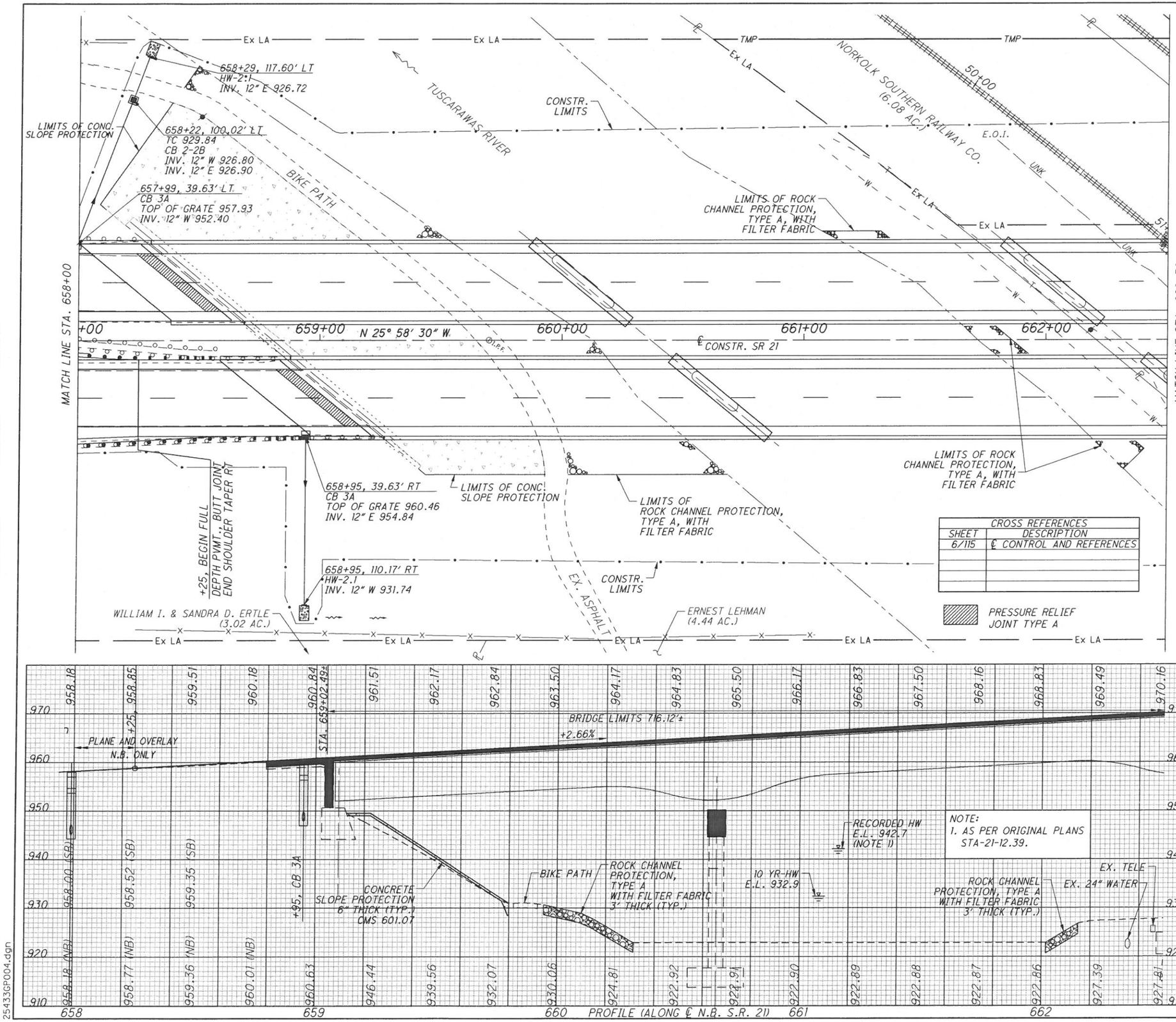

EXISTING STRUCTURE

TYPE: TWIN BRIDGE, CONTINOUS STEEL GIRDER W/REINFORCED CONCRETE DECK AND SUBSTRUCTURE UNITS.
SPAN: 156'-0"±; 2 @ 195'-0"±; 156'-0"±
ROADWAY: 33'-6" F/F PARAPET; 36'-6" O/O DECK
LOADING: CF-2000
SKEW: 51°22'00"±
ALIGNMENT: TANGENT
WEARING SURFACE: 4"± SUPERPLACTICIZED CONCRETE OVERLAY
APPROACH SLABS: 25'± (AS-1-54)
YEAR BUILT: 1957

PROPOSED STRUCTURE

PROPOSED WORK: NEW COMPOSITE CONCRETE DECK ON EXISTING GIRDERS AND SUBSTRUCTURE. REHABILITATE AND PAINT SUPERSTRUCTURE. PATCH AND SEAL SUBSTRUCTURE UNITS. REHABILITATE PIER CAPS. REMOVE AND REPLACE TOP OF ABUTMENT BACKWALLS. NEW 25' APPROACH SLABS. NEW SLOPE PROTECTION, DRAINAGE. NEW STRIP SEAL JOINTS.
TYPE: TWIN BRIDGE, COMPOSITE CONCRETE DECK ON EXISTING STEEL GIRDERS AND SUBSTRUCTURE UNITS.
SPAN: 156'-0"±; 2 @ 195'-0"±; 156'-0"±
ROADWAY: 32'-0" F/F PARAPET; 35'-0" o/o DECK
LOADING: HS25 AND ALT. MILITARY LOADING
SKEW: 51°22'00"±
ALIGNMENT: TANGENT
WEARING SURFACE: 1" MONOLITHIC CONCRETE
APPROACH SLABS: 25'-0" (AS-1-81)
SUPERELEVATION: NORMAL CROWN
LATITUDE: 40°49'00"N LONGITUDE: 81°31'50"W

REF NO.	STATION FROM	STATION TO	SIDE

TOTALS CARRIED TO GENERAL SUMMARY

HORIZONTAL SCALE IN FEET
0 10 20 40

CALCULATED CLP
CHECKED RWE

PLAN AND PROFILE
STA. 658+00.00 TO STA. 662+50.00

STA-21-12.48

58
115

7/31/2006 11:59:13 AM
H:\Projects\2006\2006-0007 STA-21-12.48 Part 2\Civil\Drawings\Plan and Profile\25433GP004.dgn
25433GP004.dgn

H:\Projects\2006\2006-0007 STA-21-12_48 Part 2\Civil\Drawings\Plan and Profile\25433GP005.dgn 7/31/2006 11:59:10 AM

25433GP005.dgn

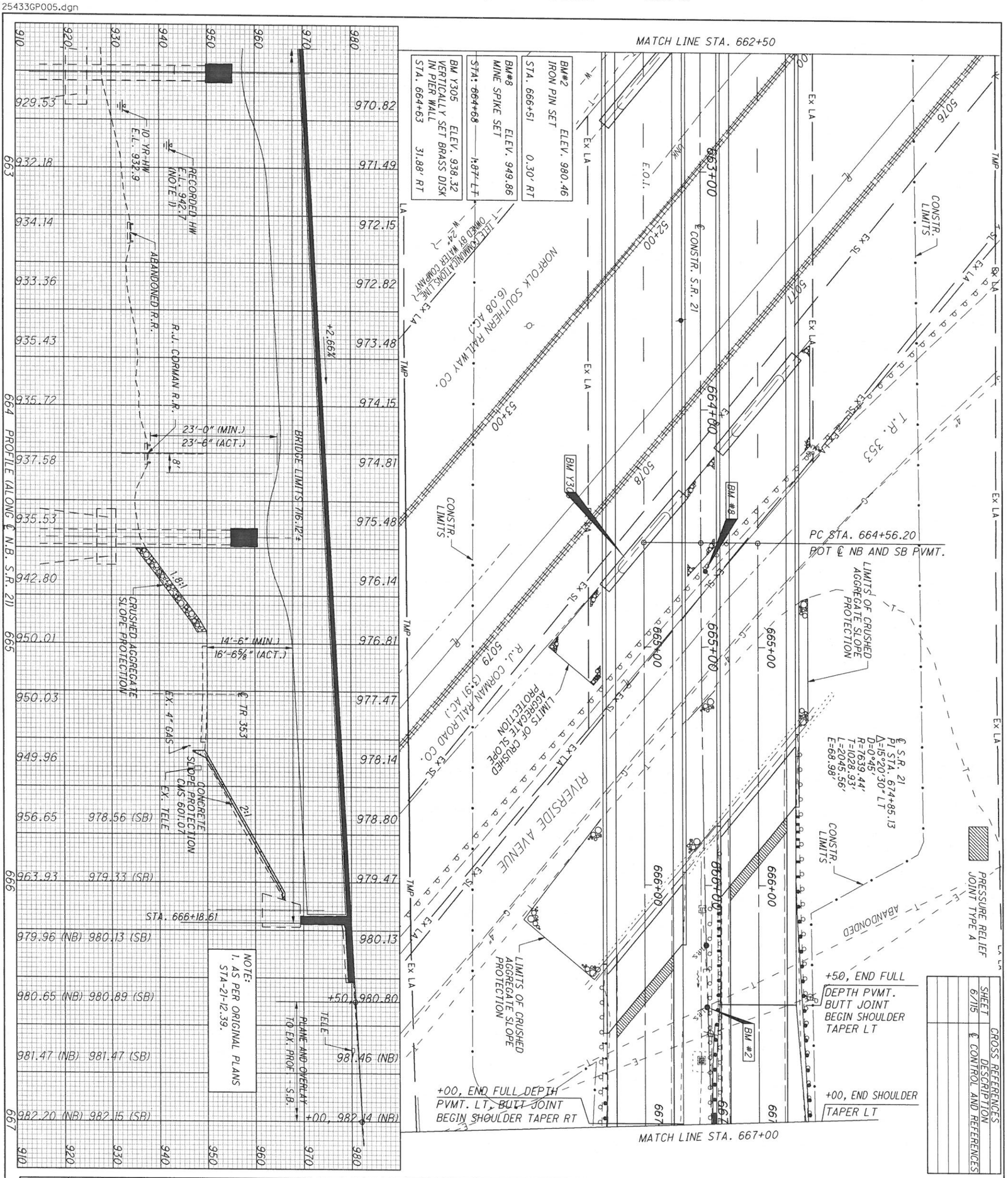

REF NO.	STATION FROM	STATION TO	SIDE

TOTALS CARRIED TO GENERAL SUMMARY

59 / 115	STA-21-12.48	PLAN AND PROFILE STA. 662+50.00 TO STA. 667+00.00	CALCULATED CLP / CHECKED RWE	0 10 20 40 HORIZONTAL SCALE IN FEET

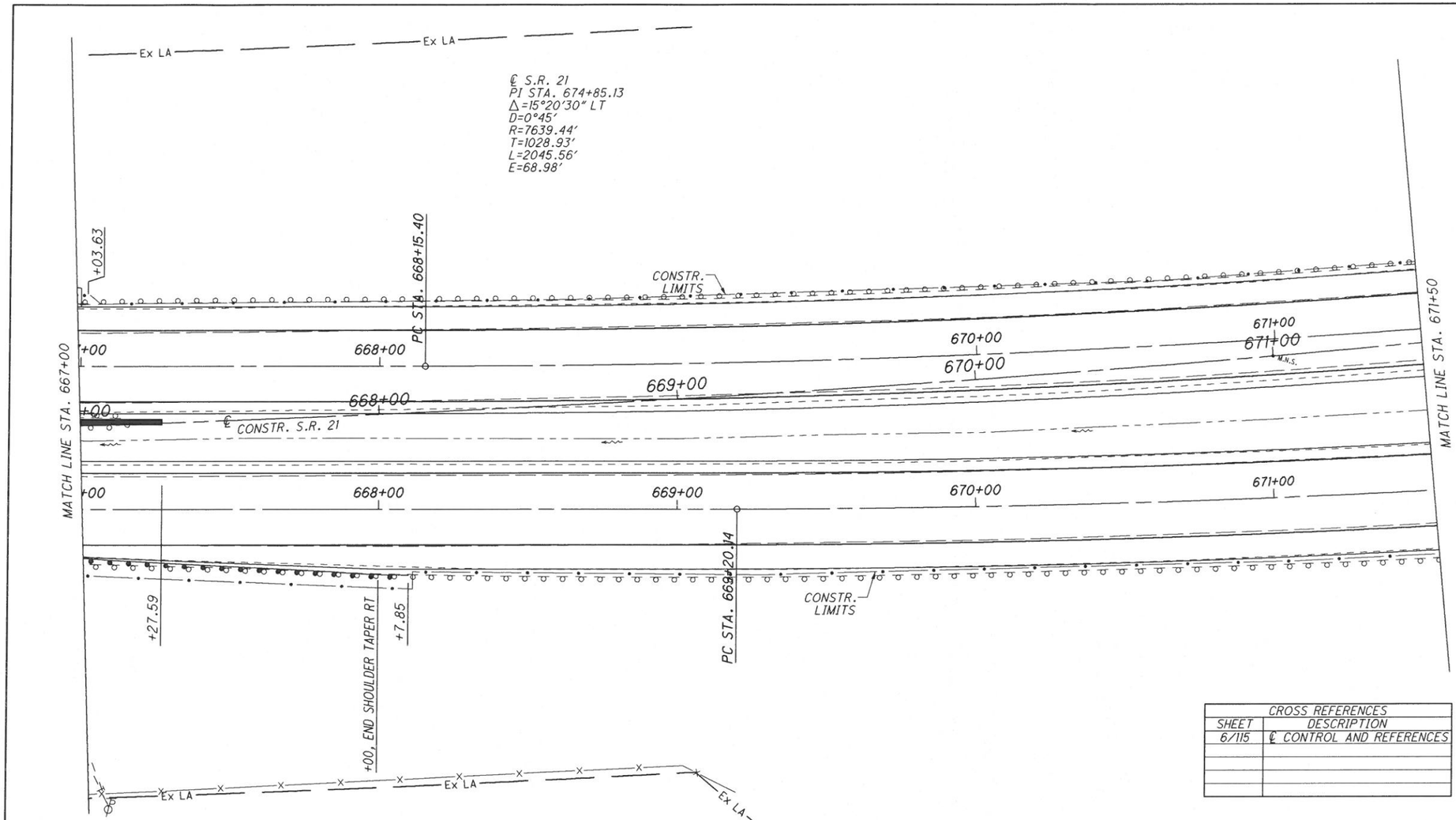

CROSS REFERENCES	
SHEET	DESCRIPTION
6/115	℄ CONTROL AND REFERENCES

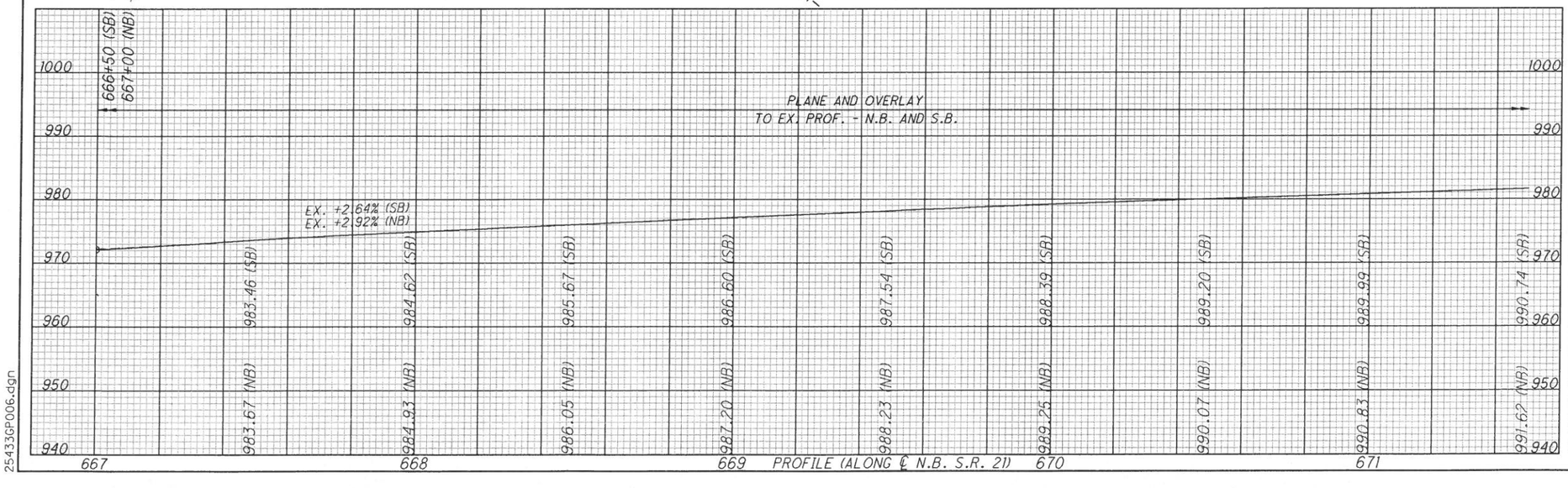

REF NO.	STATION FROM	STATION TO	SIDE

TOTALS CARRIED TO GENERAL SUMMARY

HORIZONTAL SCALE IN FEET
0 10 20 40

CALCULATED CLP
CHECKED RWE

PLAN AND PROFILE
STA. 667+00.00 TO STA. 671+50.00

STA-21-12.48

60
115

H:\Projects\2006\2006-0007 STA-21-12.48 Part 2\Civil\Drawings\Plan and Profile\25433GP006.dgn 7/31/2006 11:59:07 AM
25433GP006.dgn

H:\Projects\2006\2006-0007 STA-21-12_48 Part 2\Civil\Drawings\Plan and Profile\25433GP007.dgn 7/31/2006 11:59:05 AM

25433GP007.dgn

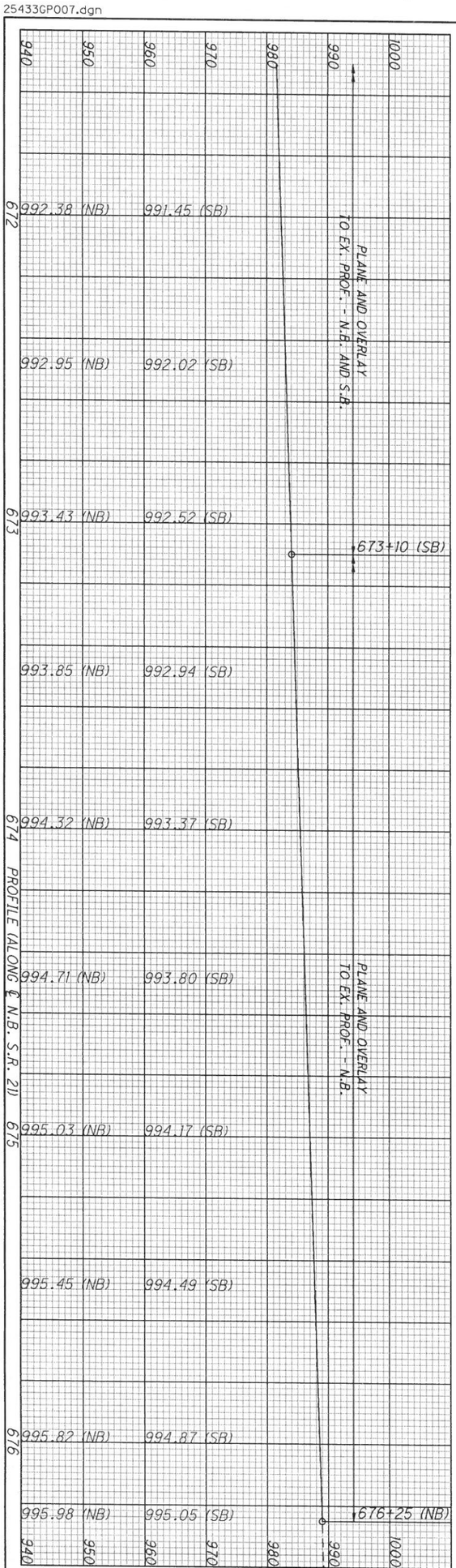

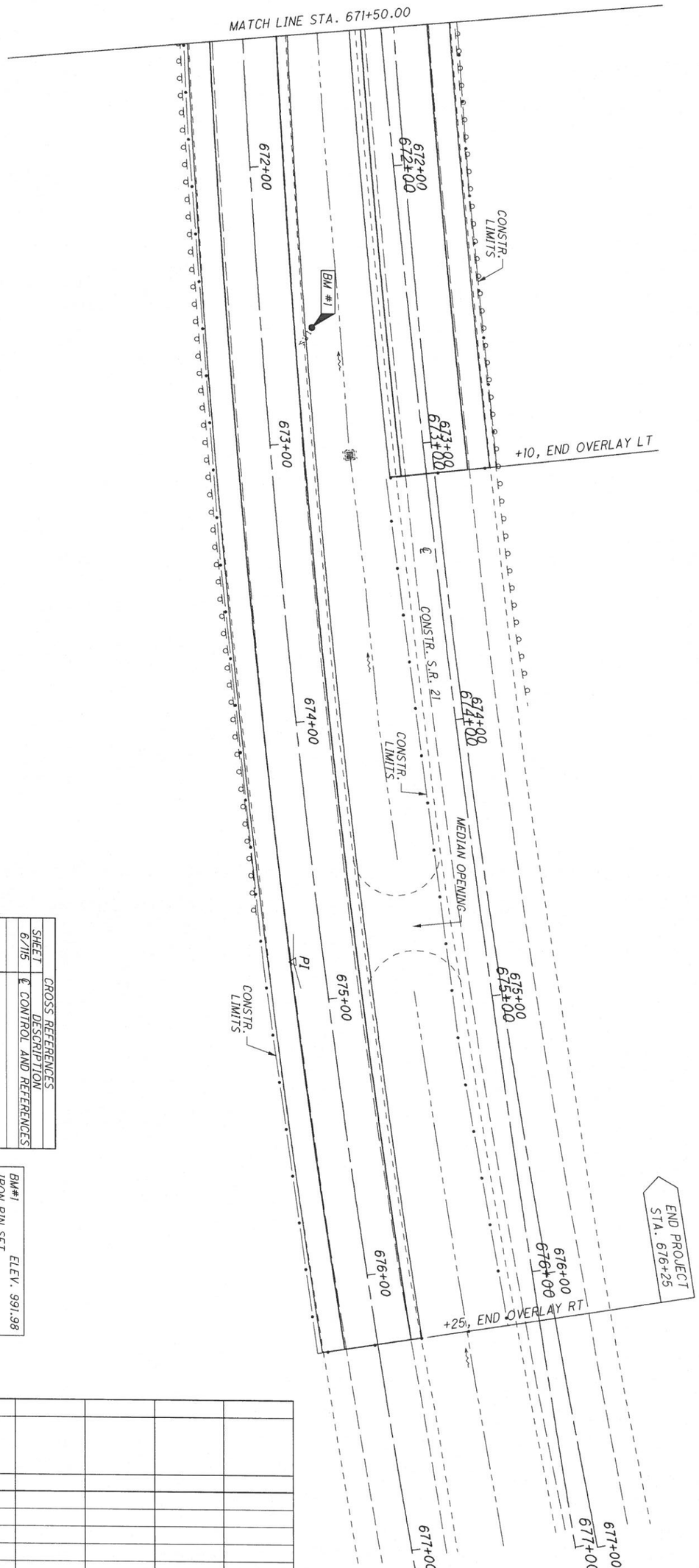

CROSS REFERENCES	
SHEET	DESCRIPTION
6/115	℄ CONTROL AND REFERENCES

BM#1
IRON PIN SET ELEV. 991.98
STA. 672+55 35.08' RT

REF NO.	STATION FROM	STATION TO	SIDE						
TOTALS CARRIED TO GENERAL SUMMARY									

61
115

STA-21-12.48

PLAN AND PROFILE
STA. 671+50.00 TO STA. 677+00.00

CALCULATED CLP
CHECKED RWE

0 20
10 40
HORIZONTAL SCALE IN FEET

N

SEEDING	
END WIDTH	SQ. YDS.

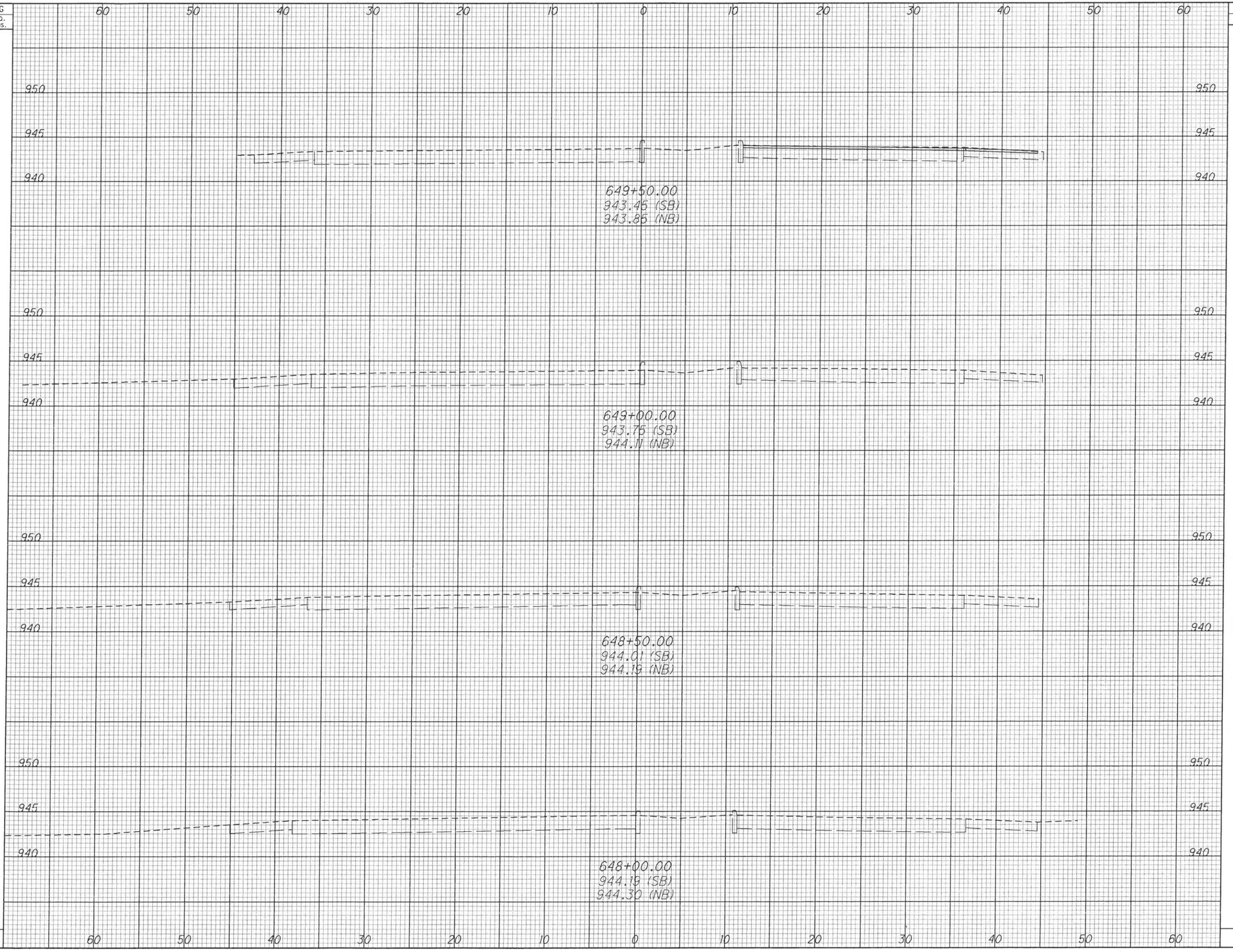

END AREA		VOLUME	
CUT	FILL	CUT	FILL

CALCULATED	CHECKED
CLP	SAN

CROSS SECTIONS

STA. 648+00.00 TO STA. 649+50.00

STA-21-12.48

SEEDING	
END WIDTH	SQ. YDS.

END AREA		VOLUME	
CUT	FILL	CUT	FILL

CALCULATED CLP

CHECKED SAN

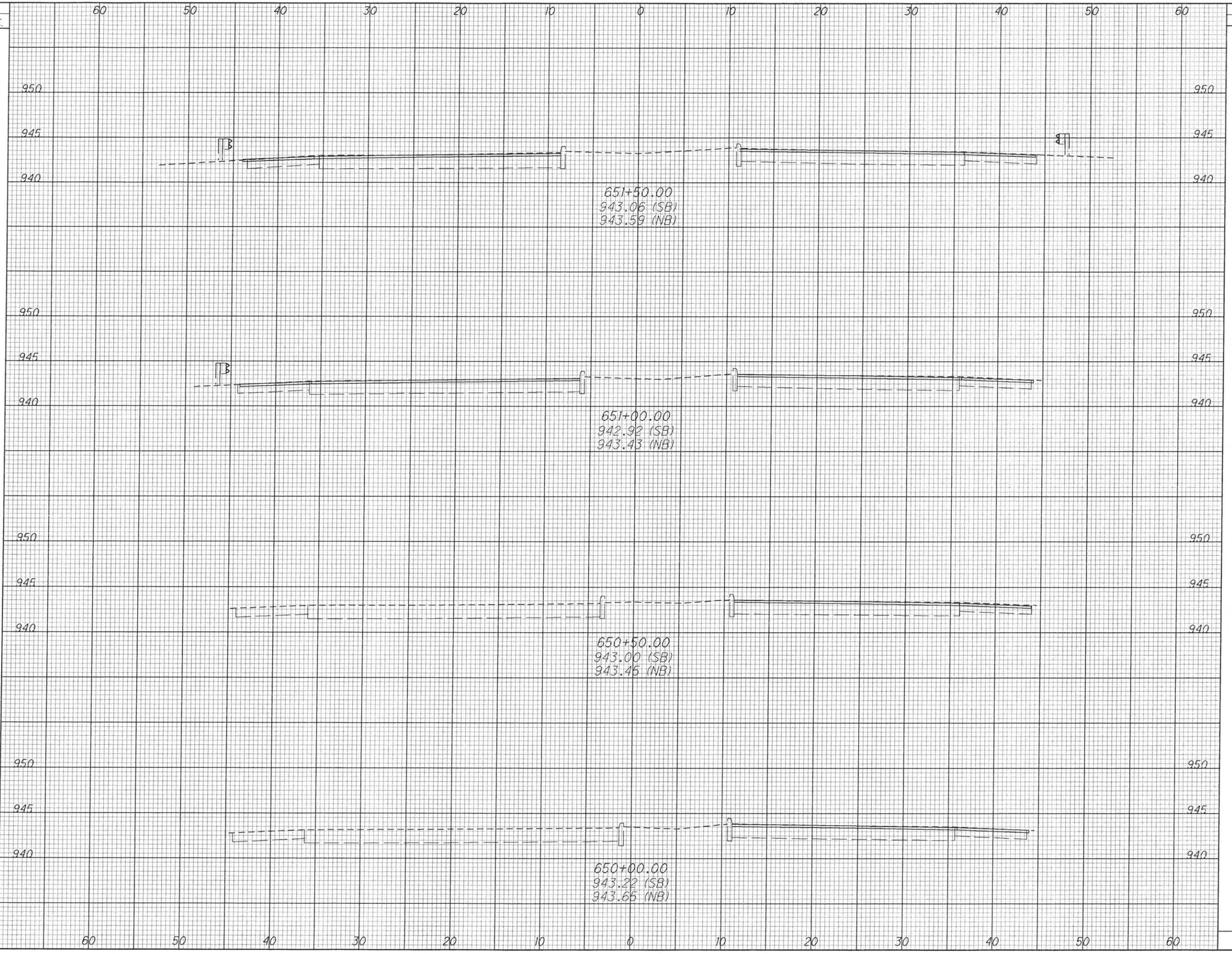

CROSS SECTIONS

STA. 650+00.00 TO STA. 651+50.00

STA-21-12.48

SEEDING	
END WIDTH	SQ. YDS.

END AREA		VOLUME	
CUT	FILL	CUT	FILL

CALCULATED CLP

CHECKED SAN

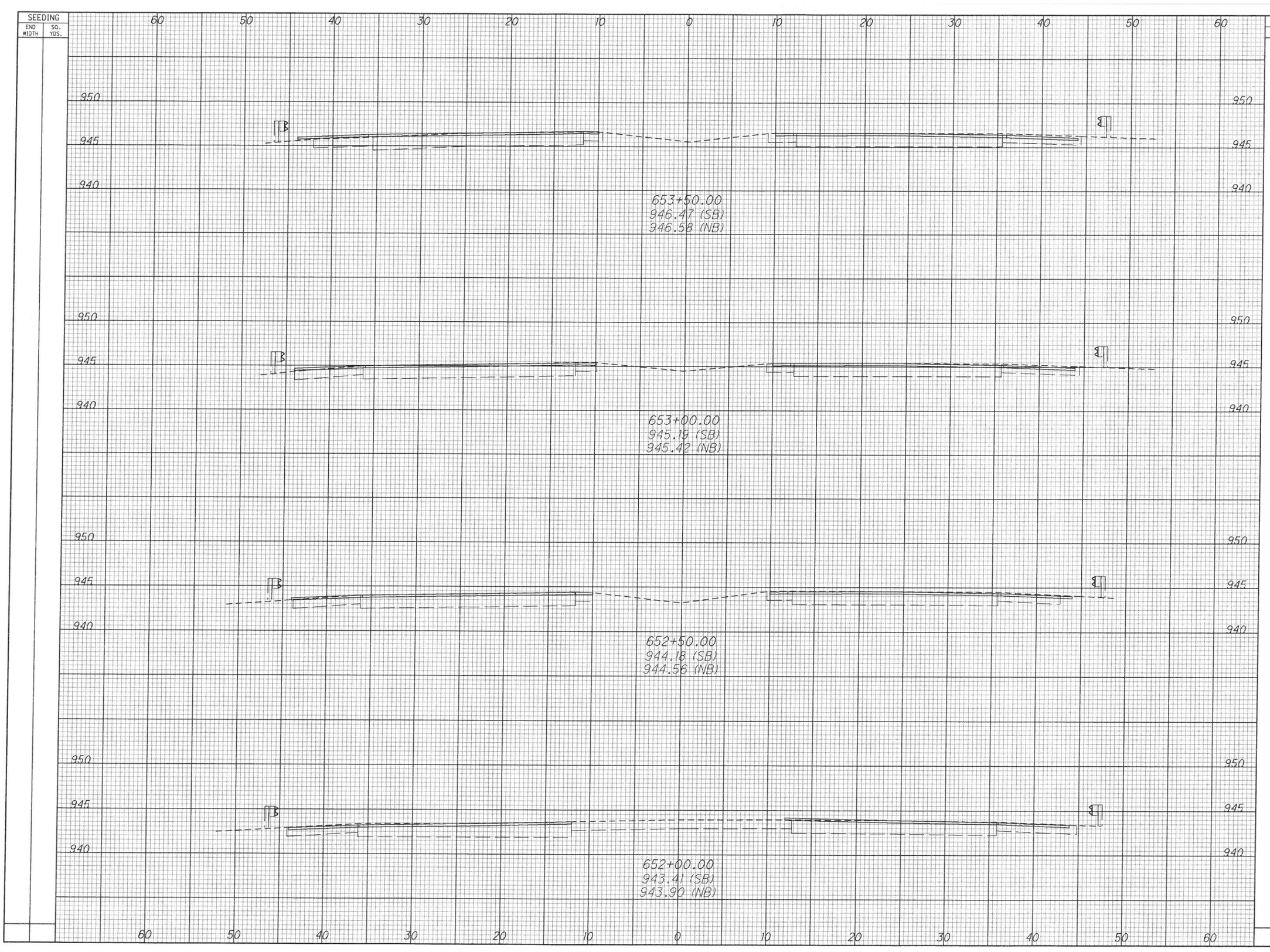

CROSS SECTIONS

STA. 652+00.00 TO STA. 653+50.00

STA-21-12.48

SEEDING	
END WIDTH	SQ. YDS.

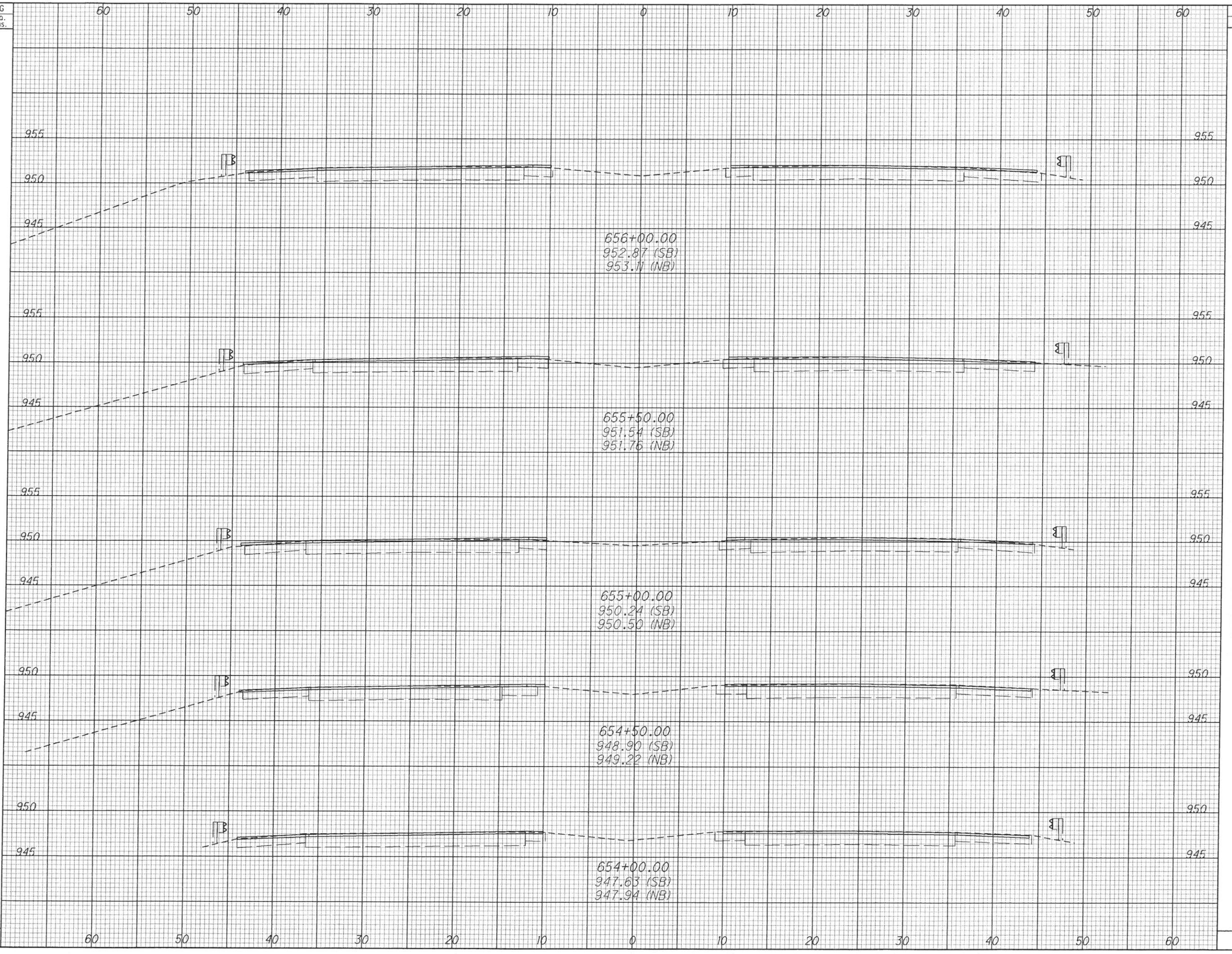

END AREA		VOLUME	
CUT	FILL	CUT	FILL

CALCULATED	CHECKED
CLP	SAN

CROSS SECTIONS

STA. 654+00.00 TO STA. 656+00.00

STA-21-12.48

SEEDING	
END WIDTH	SQ. YDS.

END AREA		VOLUME	
CUT	FILL	CUT	FILL

CALCULATED CLP

CHECKED SAN

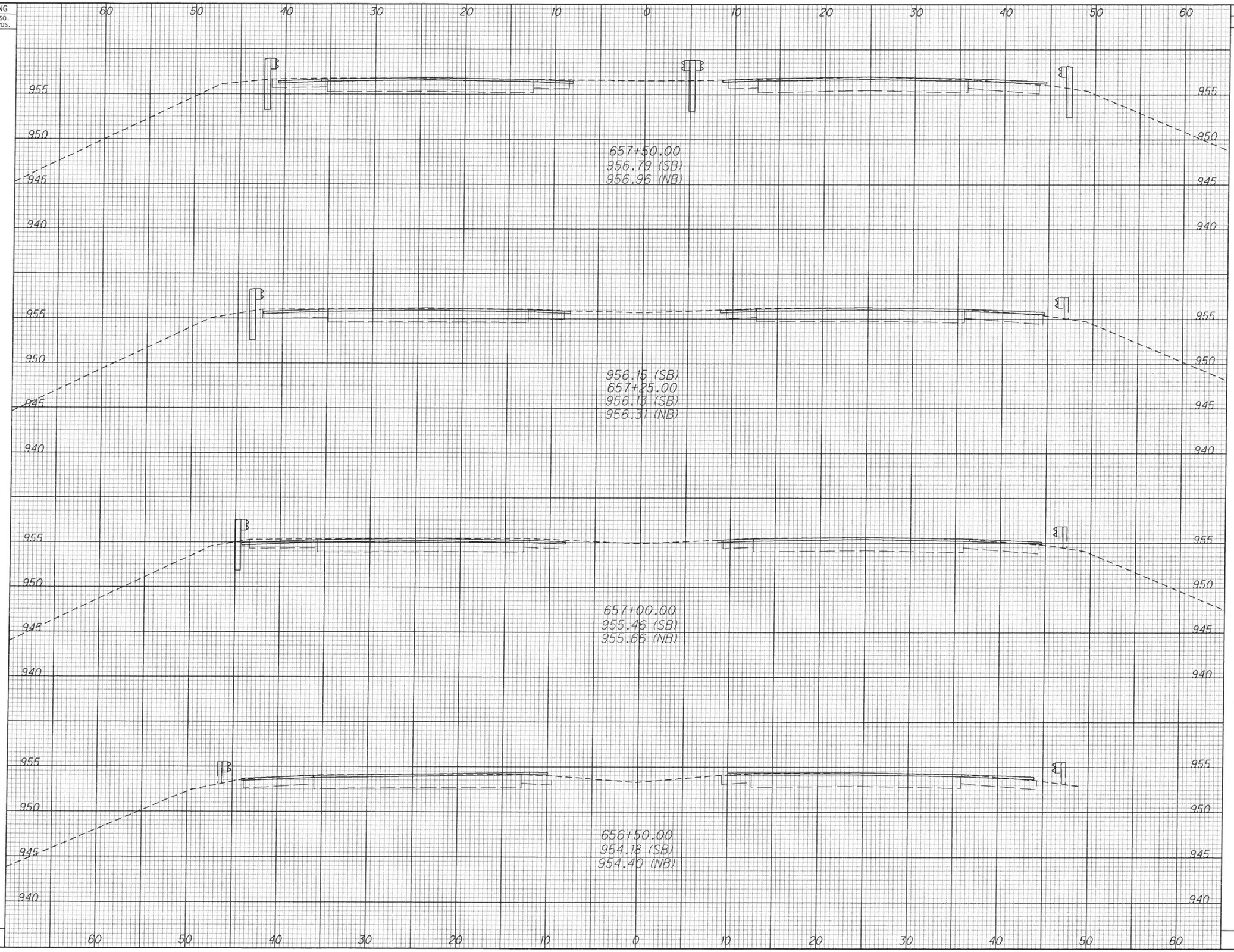

CROSS SECTIONS

STA. 656+50.00 TO STA. 657+50.00

STA-21-12.48

SEEDING	
END WIDTH	SQ. YDS.

END AREA		VOLUME	
CUT	FILL	CUT	FILL

CALCULATED CLP

CHECKED SAN

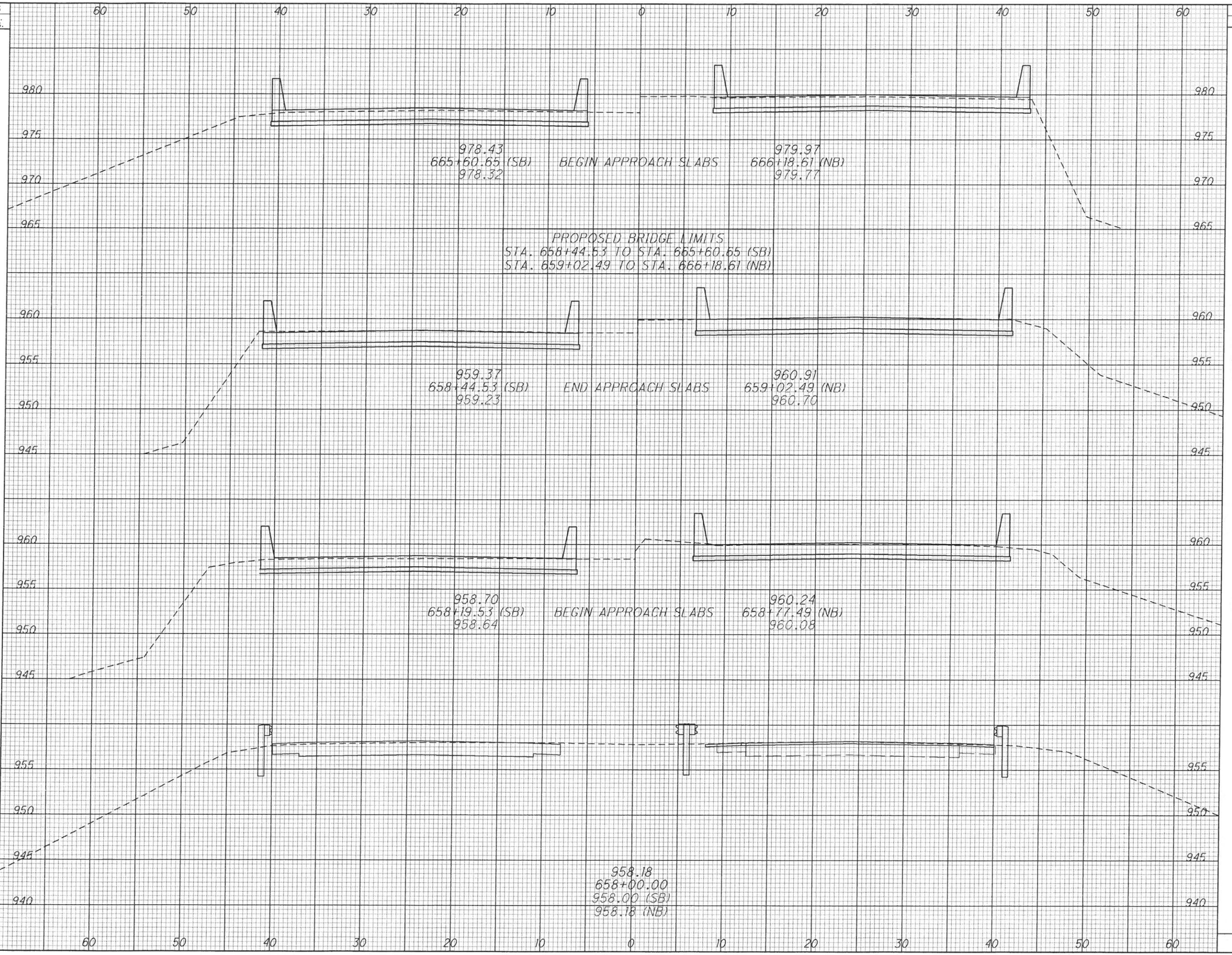

CROSS SECTIONS

STA. 658+00.00 TO STA. 666+18.61

STA-21-12.48

SEEDING	
END WIDTH	SQ. YDS.

END AREA		VOLUME	
CUT	FILL	CUT	FILL

CALCULATED CLP

CHECKED SAN

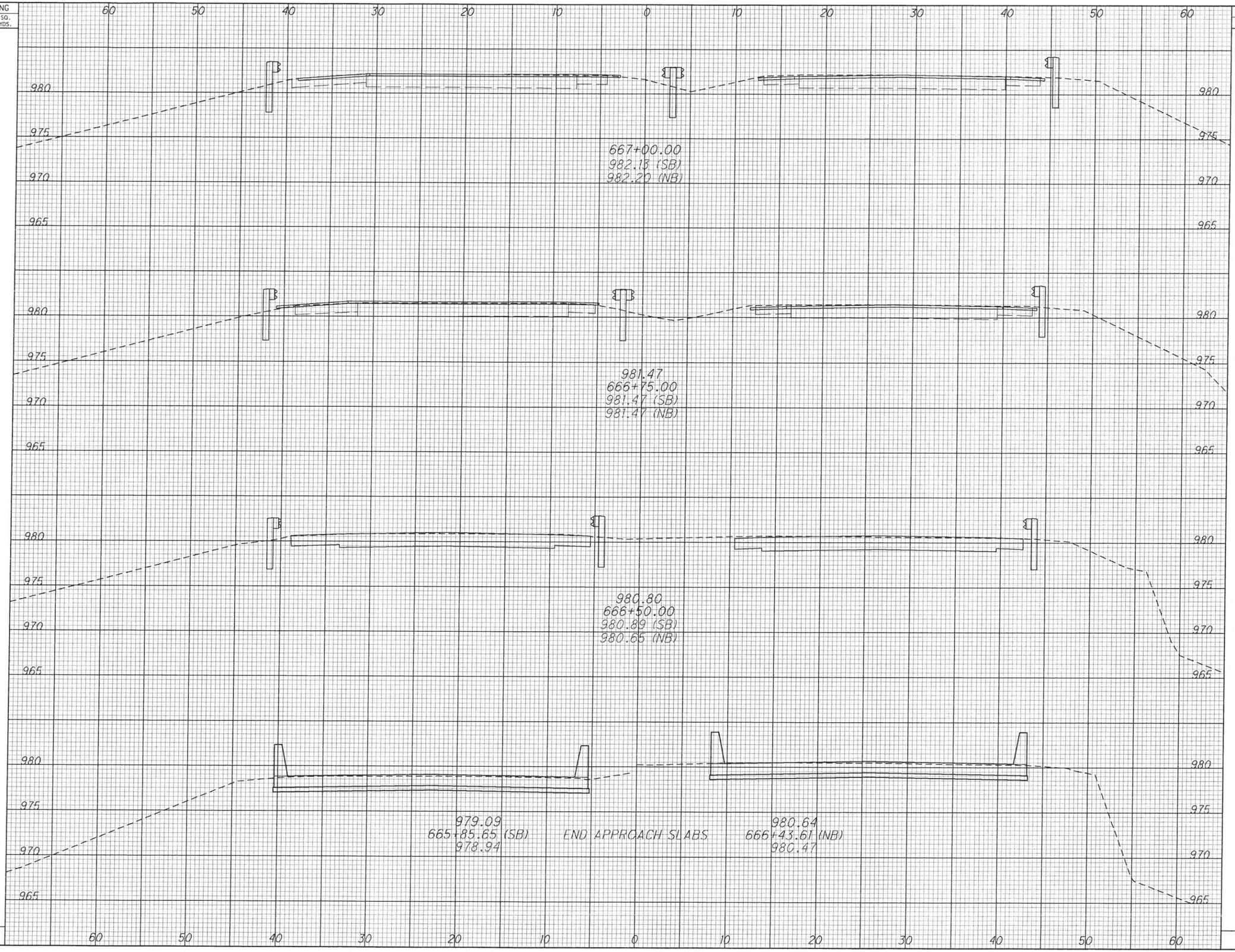

CROSS SECTIONS
STA. 665+85.65 TO STA. 667+00.00

STA-21-12.48

SEEDING	
END WIDTH	SQ. YDS.

END AREA		VOLUME	
CUT	FILL	CUT	FILL

CALCULATED CLP

CHECKED SAN

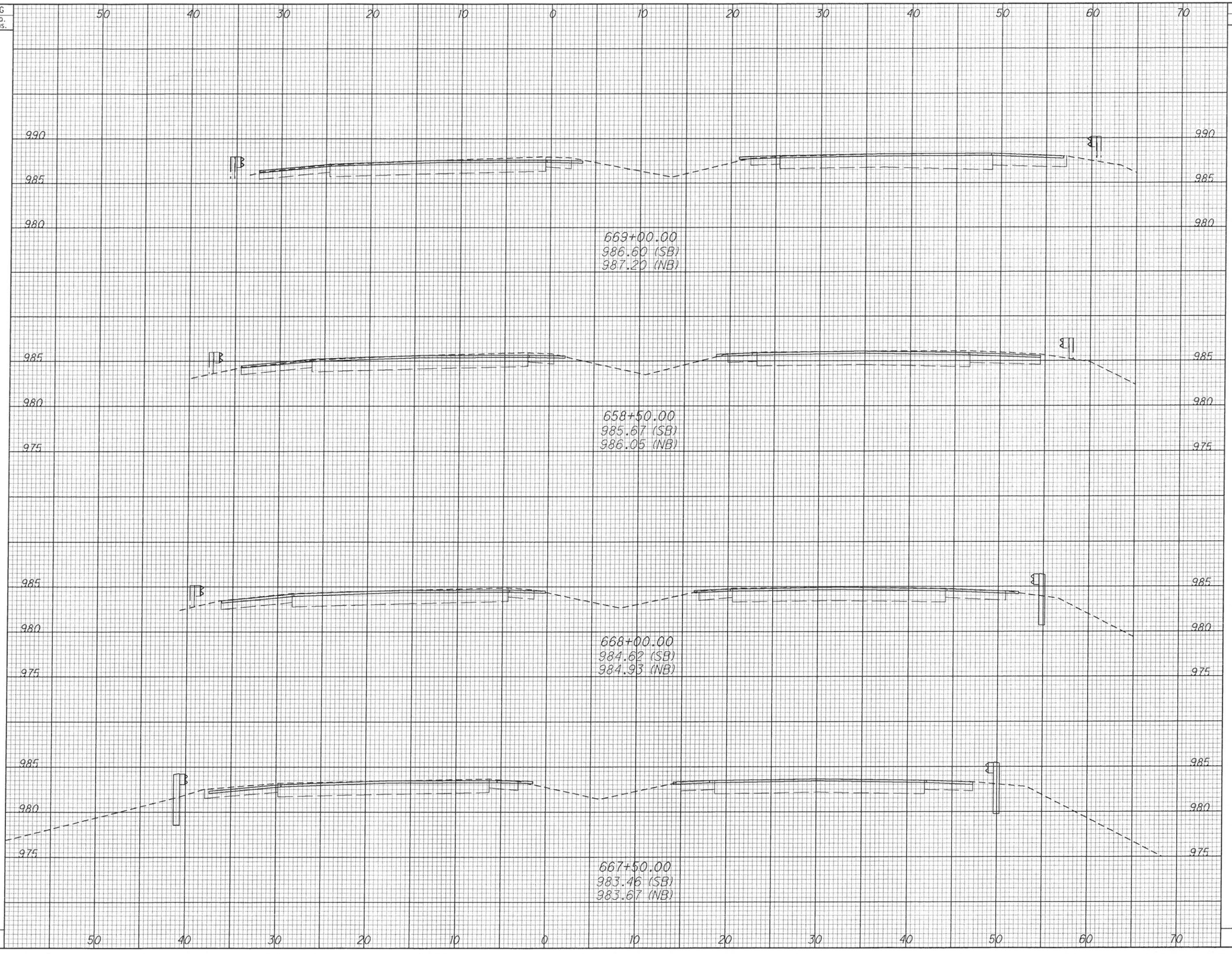

CROSS SECTIONS

STA. 667+50.00 TO STA. 669+00.00

STA-21-12.48

SEEDING	
END WIDTH	SQ. YDS.

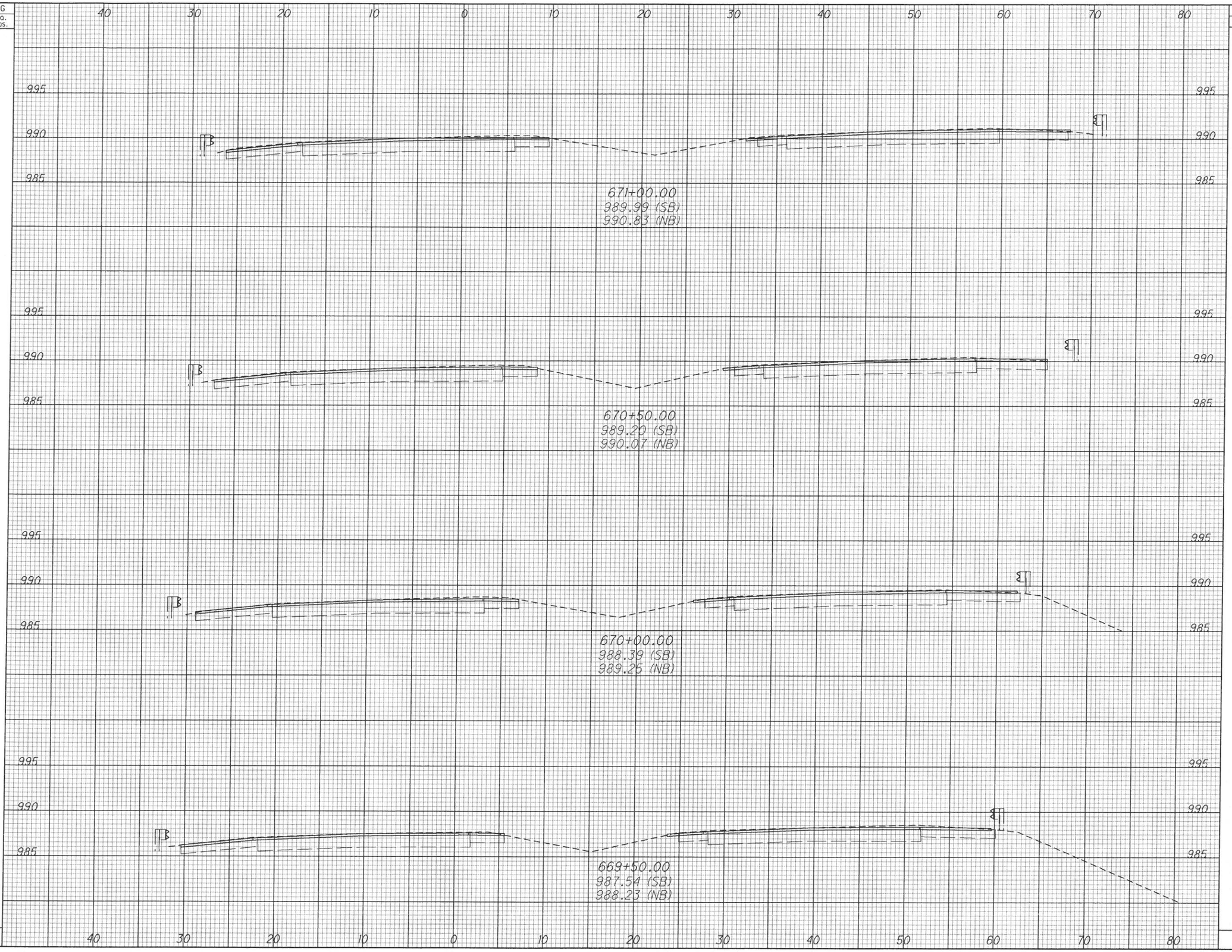

END AREA		VOLUME	
CUT	FILL	CUT	FILL

CALCULATED CLP

CHECKED SAN

CROSS SECTIONS

STA. 669+50.00 TO STA. 671+00.00

STA-21-12.48

SEEDING	
END WIDTH	SQ. YDS.

END AREA		VOLUME	
CUT	FILL	CUT	FILL

CALCULATED CLP
CHECKED SAN

CROSS SECTIONS

STA. 671+50.00 TO STA. 673+00.00

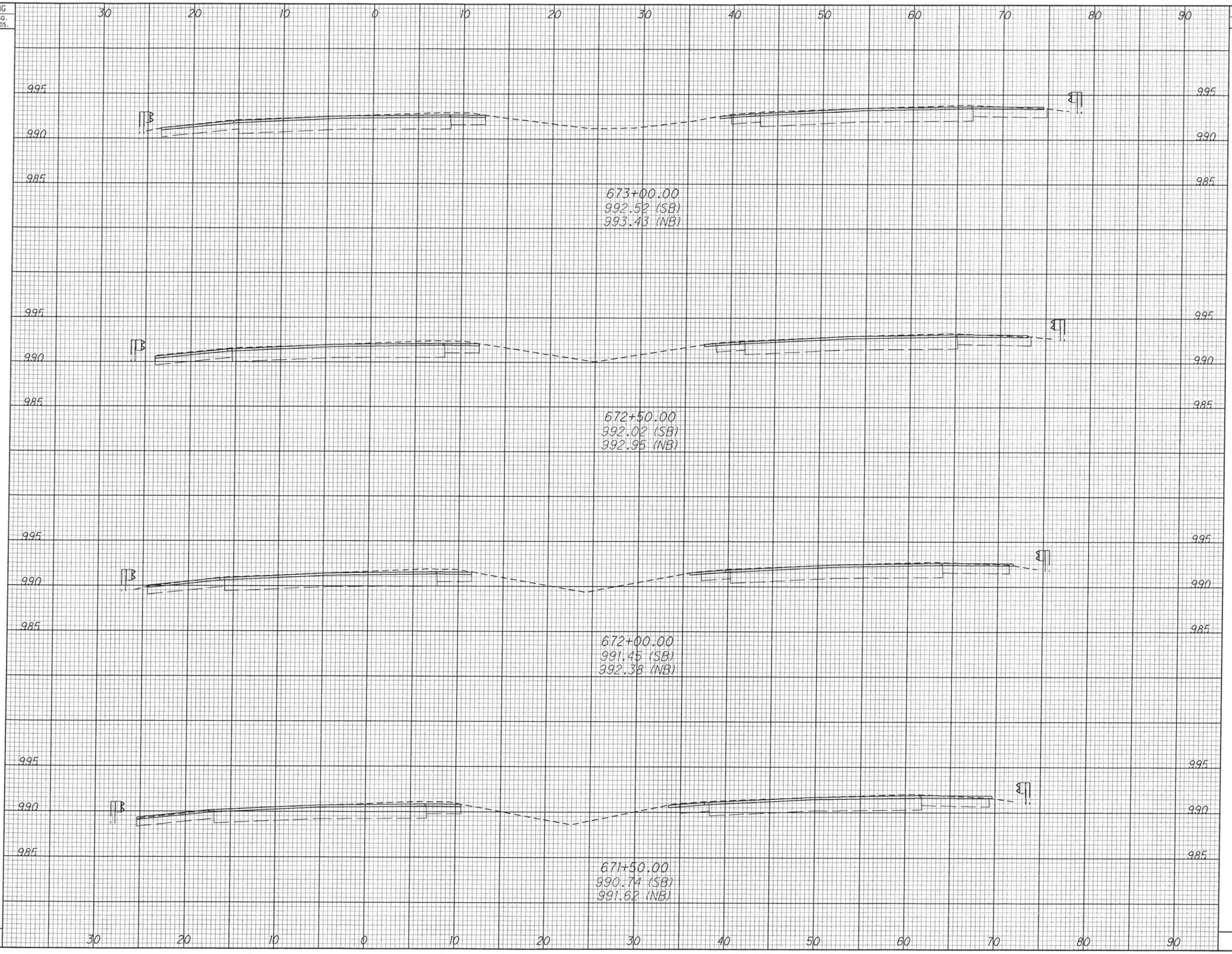

STA-21-12.48

SEEDING	
END WIDTH	SQ. YDS.

END AREA		VOLUME	
CUT	FILL	CUT	FILL

CALCULATED CLP

CHECKED SAN

CROSS SECTIONS
STA. 673+50.00 TO STA. 675+00.00

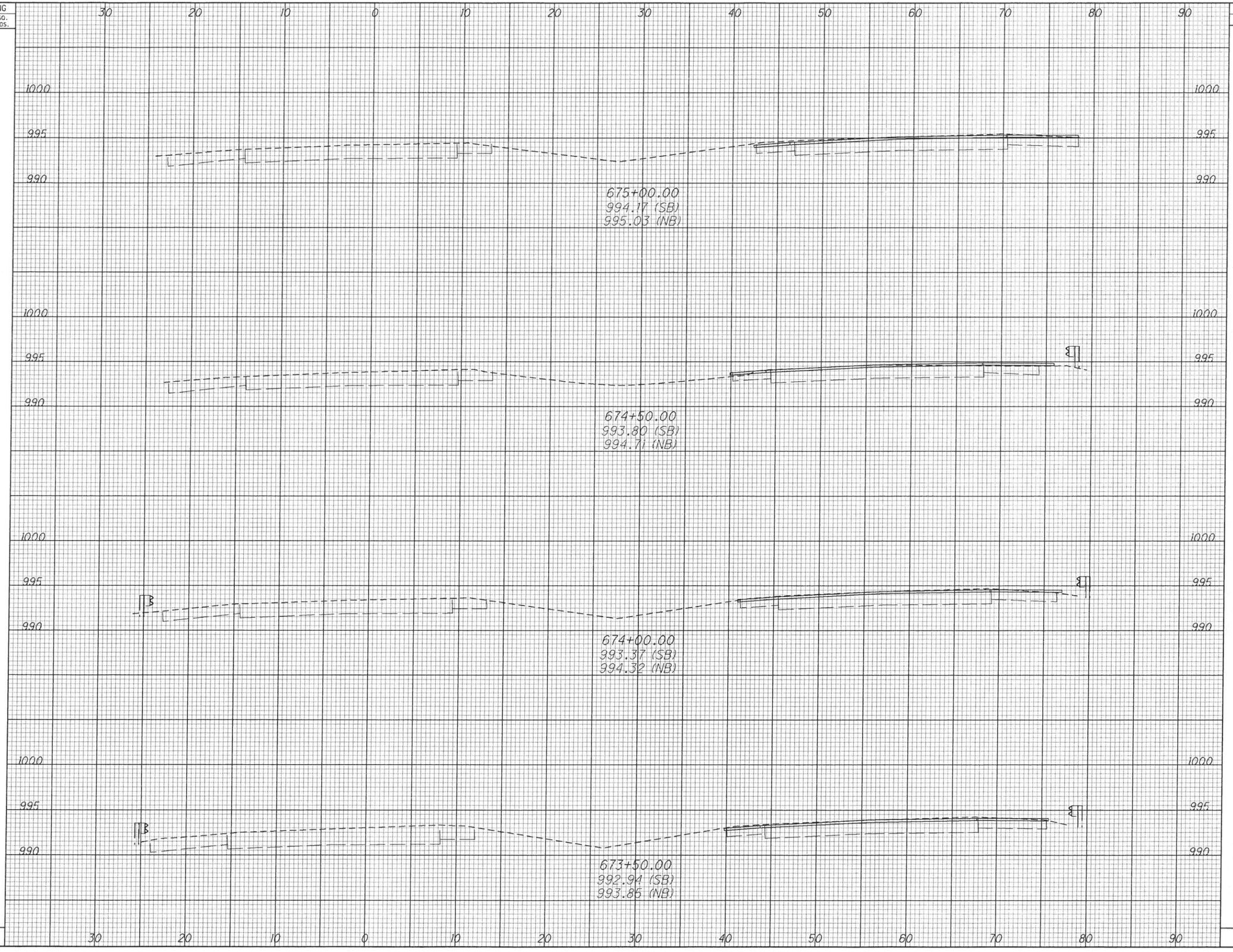

STA-21-12.48

SEEDING	
END WIDTH	SQ. YDS.

END AREA		VOLUME	
CUT	FILL	CUT	FILL

CALCULATED CLP

CHECKED SAN

CROSS SECTIONS
STA. 675+50.00 TO STA. 676+50.00

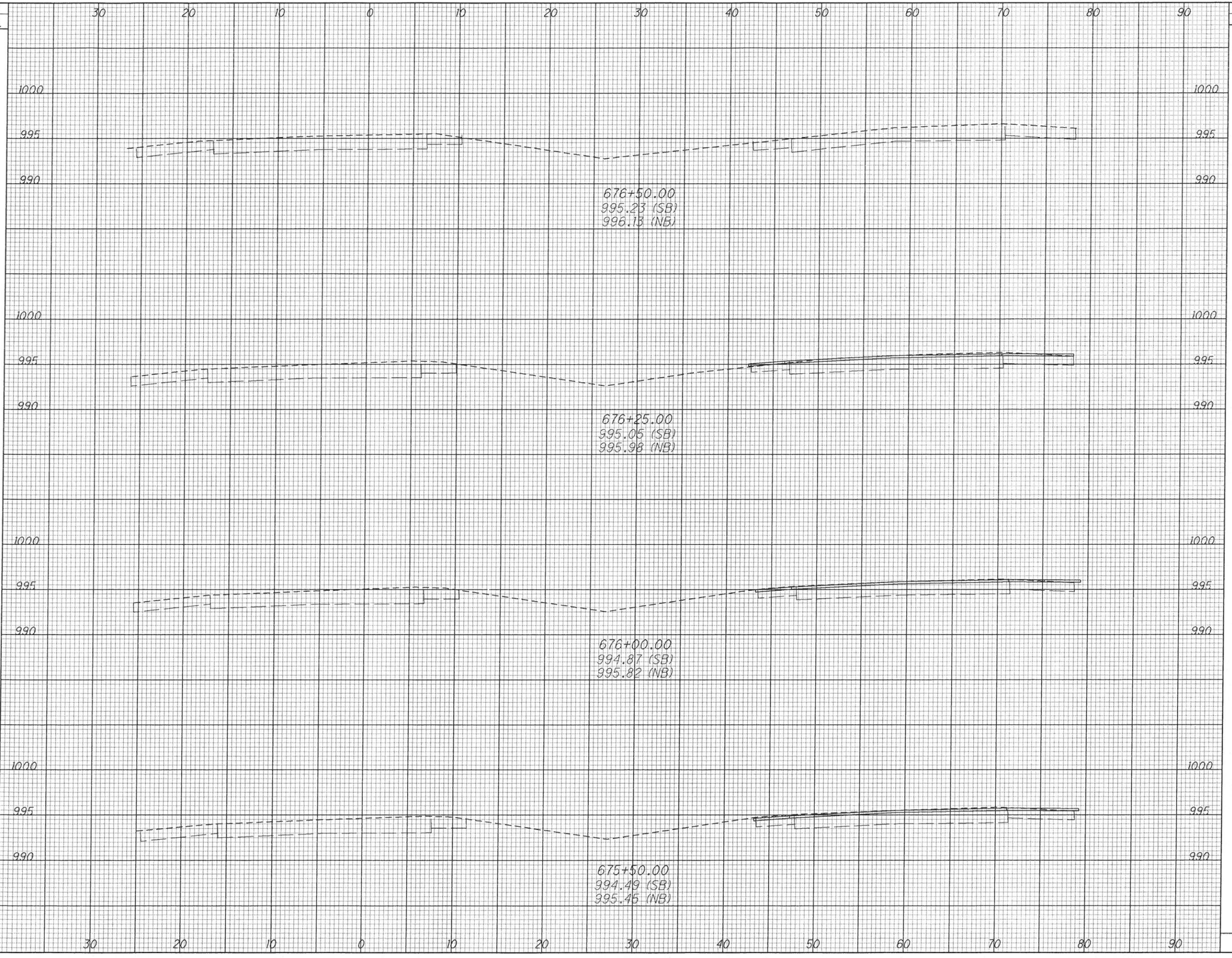

STA-21-12.48

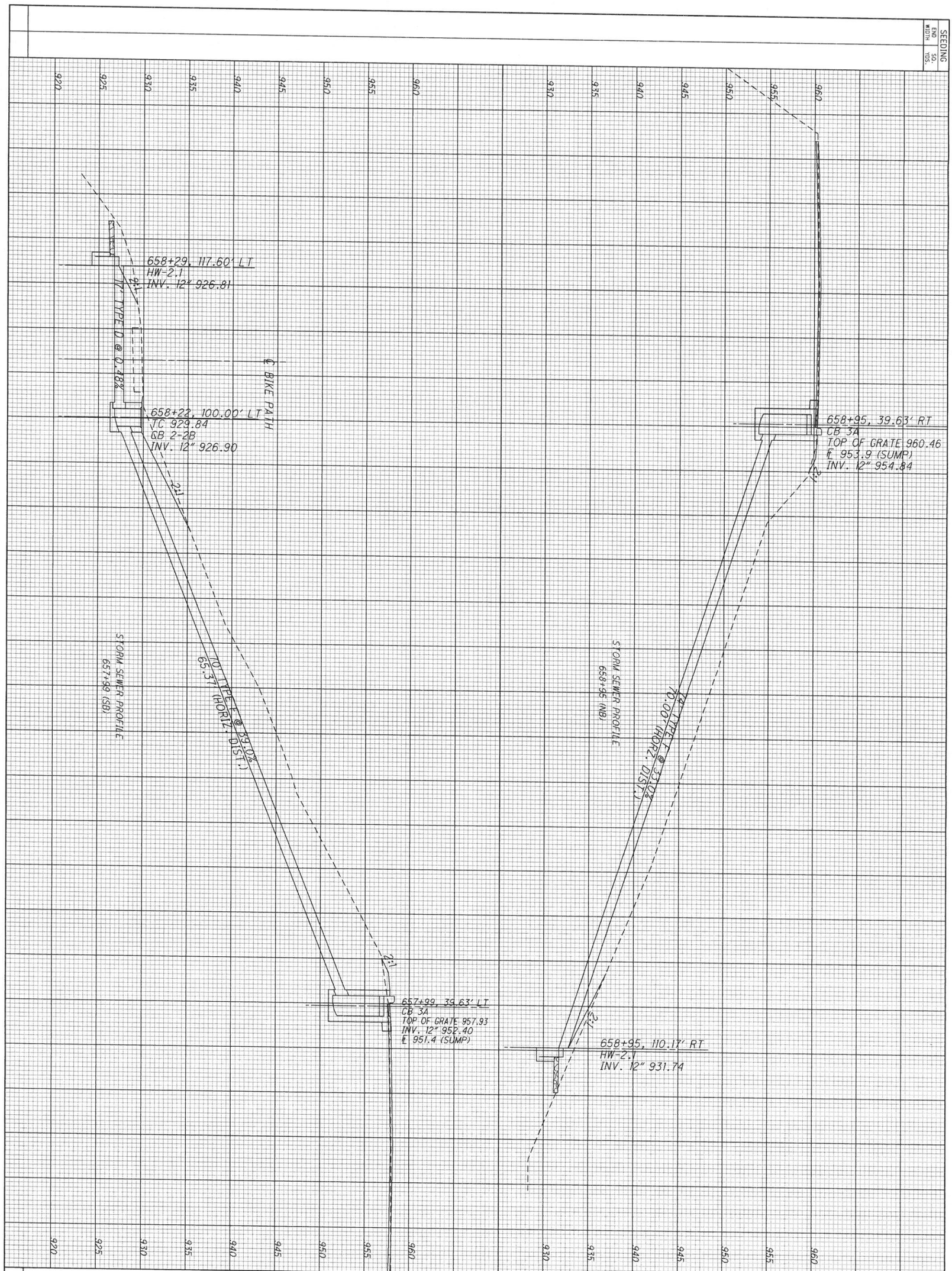

74
115

STA-21-12.48

STORM SEWER PROFILES

CALCULATED CLP

CHECKED SAN

LEGEND	
LL-#	LANE LINE
ELW-#	EDGE LINE WHITE
ELY-#	EDGE LINE YELLOW
CL-#	CHANNELIZING LINE
IMY-#	ISLAND MARKING, YELLOW
S-#	PROPOSED NEW SIGN AND SUPPORT
→	TRAFFIC FLOW ARROW
⊥	GROUND MOUNTED SIGN AND SUPPORT

NOTES: 1. ALL PAVEMENT MARKINGS SHALL BE COMPOSED OF ITEM 646-EPOXY MATERIALS.

0 25 50 100
HORIZONTAL SCALE IN FEET

CALCULATED SWC
CHECKED MAH

GPD ASSOCIATES

PAVEMENT MARKING AND SIGNING PLAN
S.R. 21 - BEGIN TO STA. 642+00

STA-21-12.48

1/6

75/115

H:\PROJECTS\2006\2006-0007 STA-21-12.48 PART 2\CIVIL\DRAWINGS\MOT\GPD STAGE 2 DGNS 7-27-06\STAGE 1 ELECTRONIC SUBMITTAL\25433BTP001.DGN
8/2/2006
9:04:21 AM
USER#

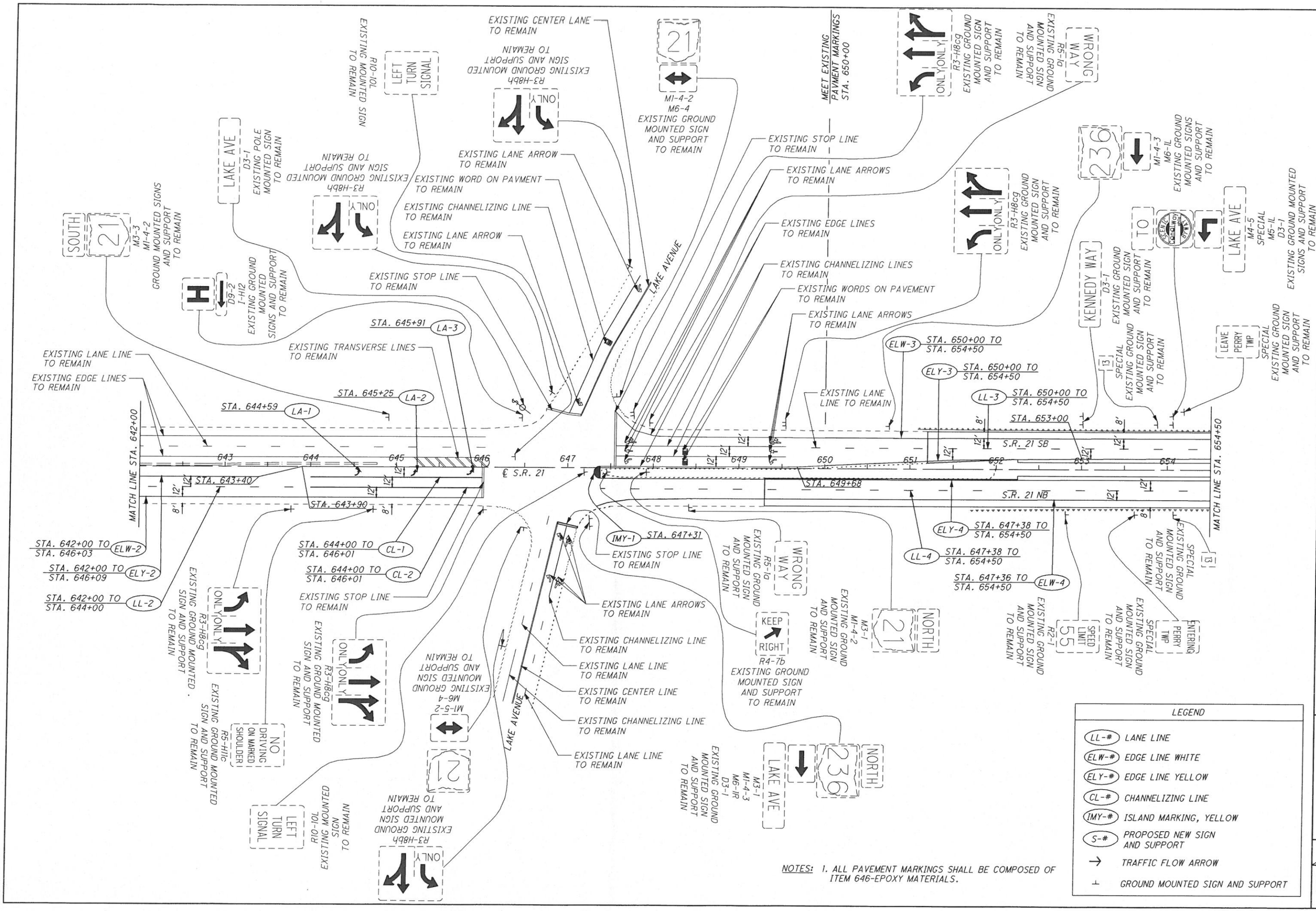
EXISTING CENTER LANE TO REMAIN
EXISTING R10-10L MOUNTED SIGN TO REMAIN
LEFT TURN SIGNAL
R3-H8bh EXISTING GROUND MOUNTED SIGN AND SUPPORT TO REMAIN
M1-4-2 M6-4 EXISTING GROUND MOUNTED SIGN AND SUPPORT TO REMAIN
MEET EXISTING PAVEMENT MARKINGS STA. 650+00
R3-H8cg EXISTING GROUND MOUNTED SIGN AND SUPPORT TO REMAIN
R5-1G WRONG WAY EXISTING GROUND MOUNTED SIGN AND SUPPORT TO REMAIN
LAKE AVE D3-1 EXISTING POLE MOUNTED SIGN TO REMAIN
SOUTH 21 M3-3 M1-4-2 GROUND MOUNTED SIGNS AND SUPPORT TO REMAIN
D9-2 I-H12 EXISTING GROUND MOUNTED SIGNS AND SUPPORT TO REMAIN
EXISTING LANE ARROW TO REMAIN
EXISTING WORD ON PAVMENT TO REMAIN
EXISTING CHANNELIZING LINE TO REMAIN
EXISTING LANE ARROW TO REMAIN
EXISTING STOP LINE TO REMAIN
EXISTING TRANSVERSE LINES TO REMAIN
EXISTING LANE LINE TO REMAIN
EXISTING EDGE LINES TO REMAIN
EXISTING STOP LINE TO REMAIN
EXISTING LANE ARROWS TO REMAIN
EXISTING EDGE LINES TO REMAIN
EXISTING CHANNELIZING LINES TO REMAIN
EXISTING WORDS ON PAVEMENT TO REMAIN
EXISTING LANE ARROWS TO REMAIN
EXISTING LANE LINE TO REMAIN
LAKE AVENUE
STA. 645+91 LA-3
STA. 645+25 LA-2
STA. 644+59 LA-1
STA. 642+00 MATCH LINE STA. 642+00
STA. 654+50 MATCH LINE STA. 654+50
643 644 645 646 647 € S.R. 21 648 649 650 651 652 653 654
STA. 643+40
STA. 643+90
STA. 649+68
S.R. 21 SB
S.R. 21 NB
12' 8'
ELW-3 STA. 650+00 TO STA. 654+50
ELY-3 STA. 650+00 TO STA. 654+50
LL-3 STA. 650+00 TO STA. 654+50
STA. 653+00
ELY-4 STA. 647+38 TO STA. 654+50
LL-4 STA. 647+38 TO STA. 654+50
STA. 647+36 TO STA. 654+50 ELW-4
IMY-1 STA. 647+31
EXISTING STOP LINE TO REMAIN
EXISTING LANE ARROWS TO REMAIN
EXISTING CHANNELIZING LINE TO REMAIN
EXISTING LANE LINE TO REMAIN
EXISTING CENTER LINE TO REMAIN
EXISTING CHANNELIZING LINE TO REMAIN
EXISTING LANE LINE TO REMAIN
STA. 642+00 TO STA. 646+03 ELW-2
STA. 642+00 TO STA. 646+09 ELY-2
STA. 642+00 TO STA. 644+00 LL-2
STA. 644+00 TO STA. 646+01 CL-1
STA. 644+00 TO STA. 646+01 CL-2
EXISTING STOP LINE TO REMAIN
R3-H8cg EXISTING GROUND MOUNTED SIGN AND SUPPORT TO REMAIN
R5-Hlc NO DRIVING ON MARKED SHOULDER
R5-1a WRONG WAY EXISTING GROUND MOUNTED SIGN AND SUPPORT TO REMAIN
R4-7b KEEP RIGHT EXISTING GROUND MOUNTED SIGN AND SUPPORT TO REMAIN
M1-5-2 M6-4 EXISTING GROUND MOUNTED SIGN AND SUPPORT TO REMAIN
R3-H8bh EXISTING GROUND MOUNTED SIGN AND SUPPORT TO REMAIN
M3-1 M1-4-2 EXISTING GROUND MOUNTED SIGN AND SUPPORT TO REMAIN
NORTH 21
NORTH 236
LAKE AVE M3-1 M1-4-3 M6-1R D3-1 EXISTING GROUND MOUNTED SIGN AND SUPPORT TO REMAIN
236 M1-4-3 M6-1L EXISTING GROUND MOUNTED SIGNS AND SUPPORT TO REMAIN
TO SR 21 SOUTH LAKE AVE
M4-5 SPECIAL M5-1L D3-1 EXISTING GROUND MOUNTED SIGNS AND SUPPORT TO REMAIN
KENNEDY WAY D3-1 EXISTING GROUND MOUNTED SIGN AND SUPPORT TO REMAIN
LEAVE PERRY TWP SPECIAL EXISTING GROUND MOUNTED SIGN AND SUPPORT TO REMAIN
ENTERING PERRY TWP SPECIAL EXISTING GROUND MOUNTED SIGN AND SUPPORT TO REMAIN
R2-1 55 SPEED LIMIT EXISTING GROUND MOUNTED SIGN AND SUPPORT TO REMAIN
LEGEND
(LL-#) LANE LINE
(ELW-#) EDGE LINE WHITE
(ELY-#) EDGE LINE YELLOW
(CL-#) CHANNELIZING LINE
(IMY-#) ISLAND MARKING, YELLOW
(S-#) PROPOSED NEW SIGN AND SUPPORT
TRAFFIC FLOW ARROW
GROUND MOUNTED SIGN AND SUPPORT
NOTES: 1. ALL PAVEMENT MARKINGS SHALL BE COMPOSED OF ITEM 646-EPOXY MATERIALS.
0 25 50 100 HORIZONTAL SCALE IN FEET
CALCULATED SWC
CHECKED MAH
GPD ASSOCIATES
PAVMENT MARKING AND SIGNING PLAN
S.R. 21 - STA. 642+00 TO STA. 654+50
STA-21-12.48
2 6
76 115
H:\PROJECTS\2006\2006-0007 STA-21-12.48 PART 2\CIVIL\DRAWINGS\MOT\GPD STAGE 2 DGNS 7-27-06\STAGE 1 ELECTRONIC SUBMITTAL\2543387P002.DGN
8/2/2006
8:04:38 AM
USER

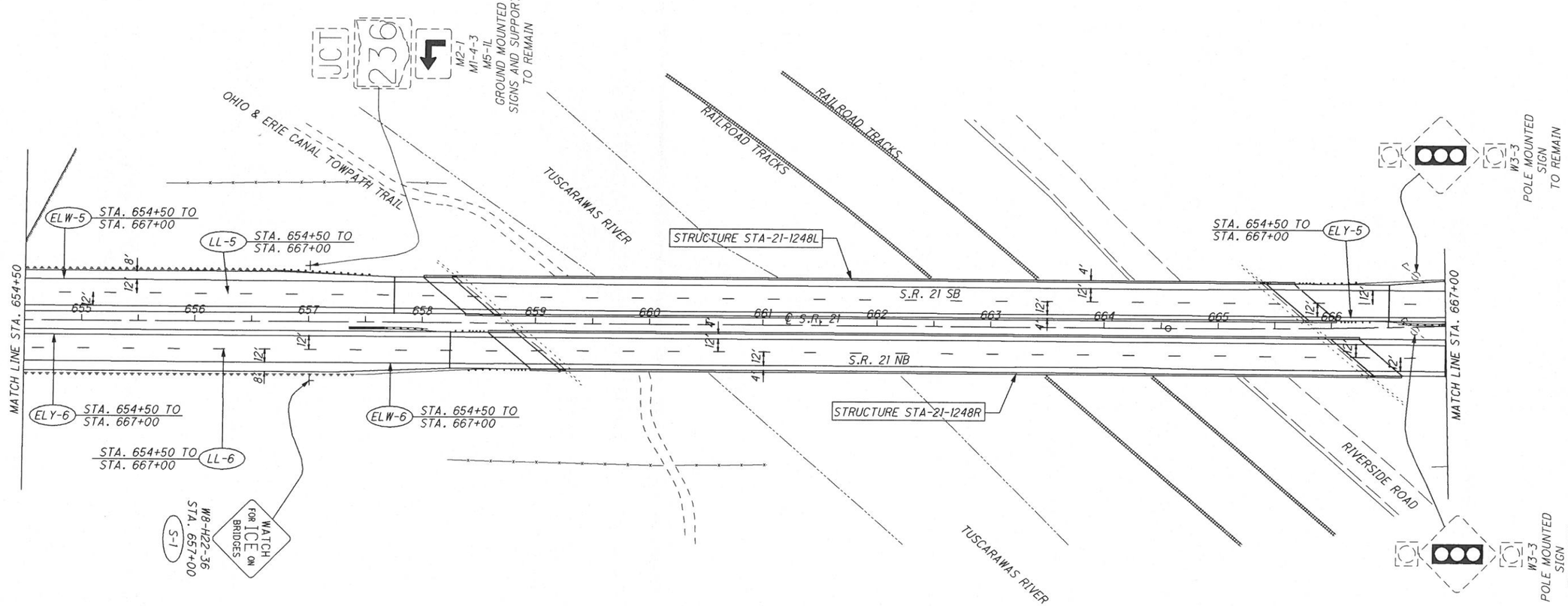

LEGEND

- (LL-#) LANE LINE
- (ELW-#) EDGE LINE WHITE
- (ELY-#) EDGE LINE YELLOW
- (CL-#) CHANNELIZING LINE
- (IMY-#) ISLAND MARKING, YELLOW
- (S-#) PROPOSED NEW SIGN AND SUPPORT
- → TRAFFIC FLOW ARROW
- ⊥ GROUND MOUNTED SIGN AND SUPPORT

NOTES: 1. ALL PAVEMENT MARKINGS SHALL BE COMPOSED OF ITEM 646-EPOXY MATERIALS.

ITEM 630 - SIGN, AS PER PLAN (W8-H22-36)

THIS ITEM SHALL BE AS DESCRIBED IN ITEM 630, EXCEPT THAT THE PARTICULAR SIGN SHALL BE EQUIPPED WITH HINGES TO ALLOW THE MESSAGE TO BE COVERED DURING SEASONS WHEN IT IS NOT IN USE.

HORIZONTAL SCALE IN FEET
0 25 50 100

CALCULATED SWC
CHECKED MAH

GPD ASSOCIATES

PAVEMENT MARKING AND SIGNING PLAN
S.R. 21 - STA. 654+50 TO STA. 667+00

STA-21-12.48

3 / 6

77 / 115

H:\PROJECTS\2006\2006-0007 STA-21-12.48 PART 2\CIVIL\DRAWINGS\MOT\GPD STAGE 2 DGNS 7-27-06\STAGE 1 ELECTRONIC SUBMITTAL\2543087P003.DGN
8/22/2006
8:04:05 AM
USER#

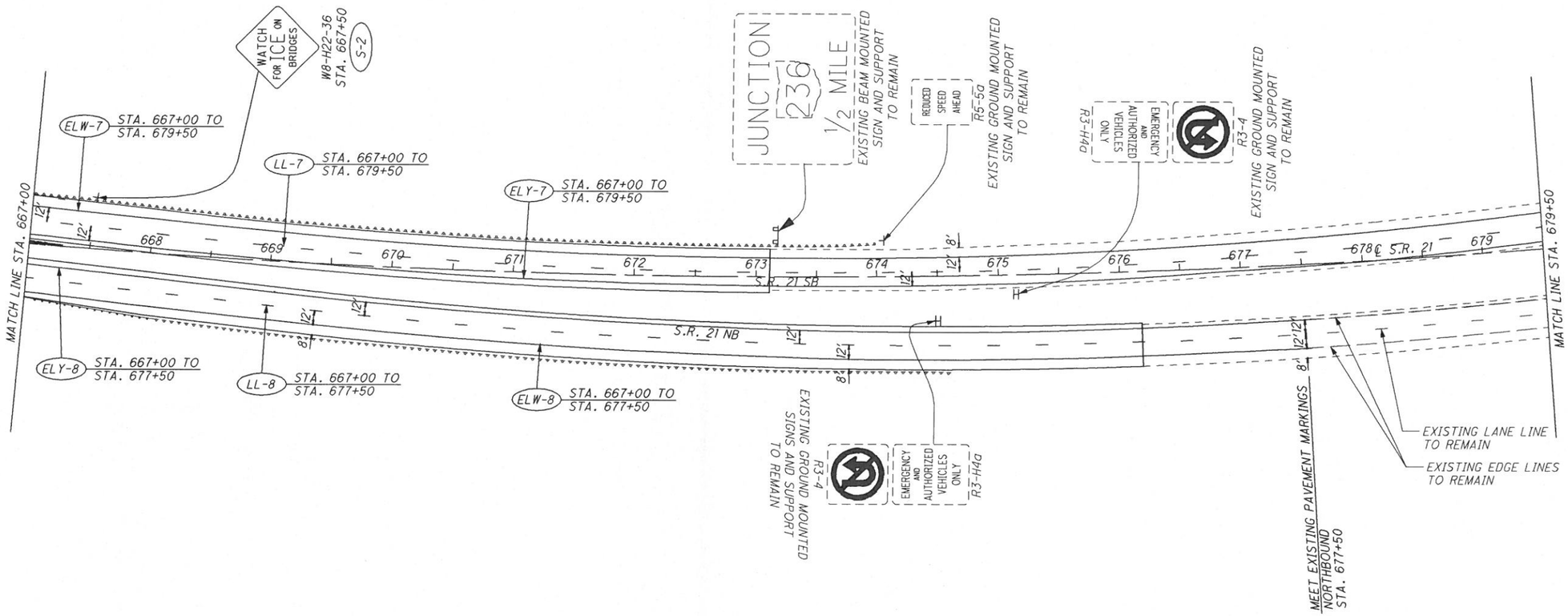

LEGEND	
(LL-#)	LANE LINE
(ELW-#)	EDGE LINE WHITE
(ELY-#)	EDGE LINE YELLOW
(CL-#)	CHANNELIZING LINE
(IMY-#)	ISLAND MARKING, YELLOW
(S-#)	PROPOSED NEW SIGN AND SUPPORT
→	TRAFFIC FLOW ARROW
⊥	GROUND MOUNTED SIGN AND SUPPORT

NOTES: 1. ALL PAVEMENT MARKINGS SHALL BE COMPOSED OF ITEM 646-EPOXY MATERIALS.

ITEM 630 - SIGN, AS PER PLAN (W8-H22-36)

THIS ITEM SHALL BE AS DESCRIBED IN ITEM 630, EXCEPT THAT THE PARTICULAR SIGN SHALL BE EQUIPPED WITH HINGES TO ALLOW THE MESSAGE TO BE COVERED DURING SEASONS WHEN IT IS NOT IN USE.

CALCULATED SWC
CHECKED MAH

0 25 50 100
HORIZONTAL SCALE IN FEET

GPD ASSOCIATES

PAVEMENT MARKING AND SIGNING PLAN
S.R. 21 - STA. 667+00 TO STA. 679+50

STA-21-12.48

4/6

78/115

H:\PROJECTS\2006\2006-0007 STA-21-12.48 PART 2\CIVIL\DRAWINGS\MOT\GPD STAGE 2 DGNS 7-27-06\STAGE 1 ELECTRONIC SUBMITTAL\25432BTP004.DGN
8/2/2006
9:05:19 AM
$USER$

H:\PROJECTS\2006\2006-0007 STA-21-12_48 PART 2\CIVIL\DRAWINGS\MOT\GPD STAGE 2 DGNS 7-27-06\STAGE 1 ELECTRONIC SUBMITTAL\25433BTP005.DGN
8/2/2006
8:05:34 AM
USER#

LEGEND

- (LL-#) LANE LINE
- (ELW-#) EDGE LINE WHITE
- (ELY-#) EDGE LINE YELLOW
- (CL-#) CHANNELIZING LINE
- (IMY-#) ISLAND MARKING, YELLOW
- (S-#) PROPOSED NEW SIGN AND SUPPORT
- ↓ TRAFFIC FLOW ARROW
- ⊢ GROUND MOUNTED SIGN AND SUPPORT

NOTES: 1. ALL PAVEMENT MARKINGS SHALL BE COMPOSED OF ITEM 646-EPOXY MATERIALS.

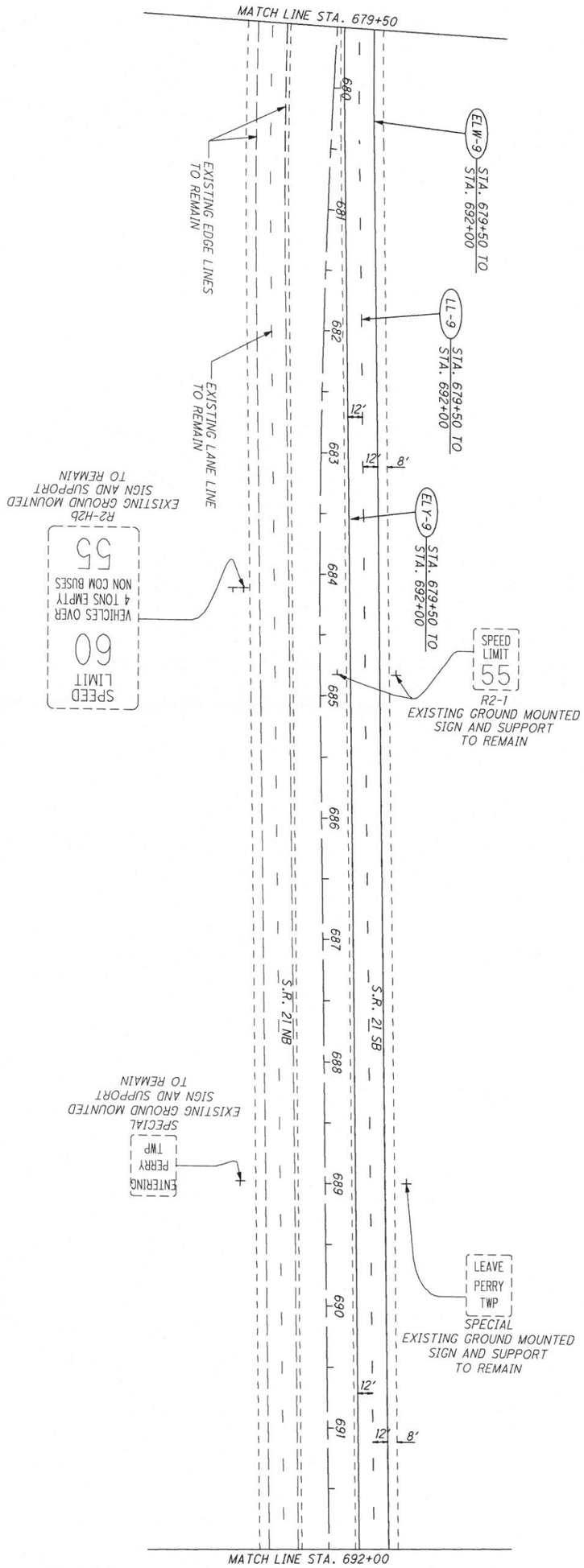

79/115 | 5/6 | STA-21-12.48

PAVEMENT MARKING AND SIGNING PLAN

S.R. 21 - STA. 679+50 TO STA. 692+00

GPD ASSOCIATES

CALCULATED SWC | CHECKED MAH

0 50 25 100 HORIZONTAL SCALE IN FEET

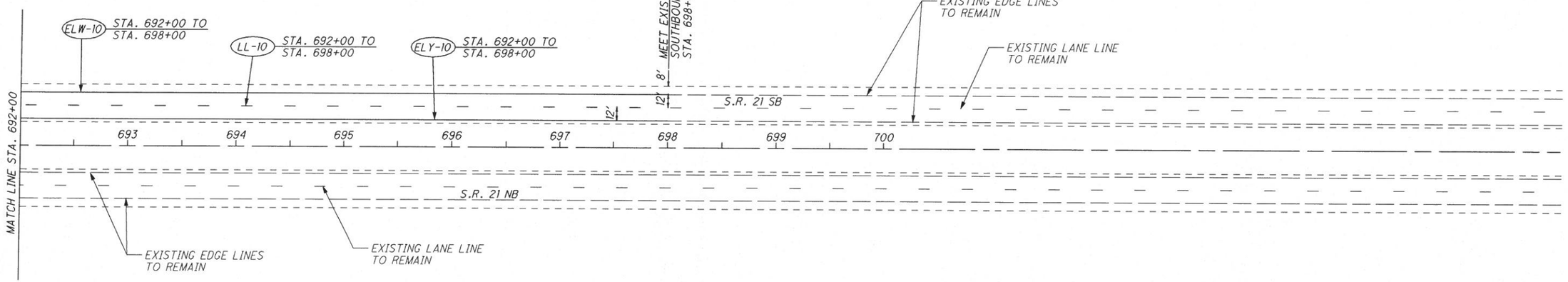

LEGEND	
LL-#	LANE LINE
ELW-#	EDGE LINE WHITE
ELY-#	EDGE LINE YELLOW
CL-#	CHANNELIZING LINE
IMY-#	ISLAND MARKING, YELLOW
S-#	PROPOSED NEW SIGN AND SUPPORT
→	TRAFFIC FLOW ARROW
⊥	GROUND MOUNTED SIGN AND SUPPORT

NOTES: 1. ALL PAVEMENT MARKINGS SHALL BE COMPOSED OF ITEM 646-EPOXY MATERIALS.

CALCULATED SWC
CHECKED MAH

0 25 50 100
HORIZONTAL SCALE IN FEET

GPD ASSOCIATES

PAVEMENT MARKING PLAN
S.R. 21 - STA. 692+00 TO END

STA-21-12.48

6/6

80/115

H:\PROJECTS\2006\2006-2007 STA-21-12.48 PART 2\CIVIL\DRAWINGS\MOT\GPD STAGE 2 DGNS 7-27-06\STAGE 1 ELECTRONIC SUBMITTAL\2543SBTP006.DGN
9/27/2006
9:05:47 AM
$USER$

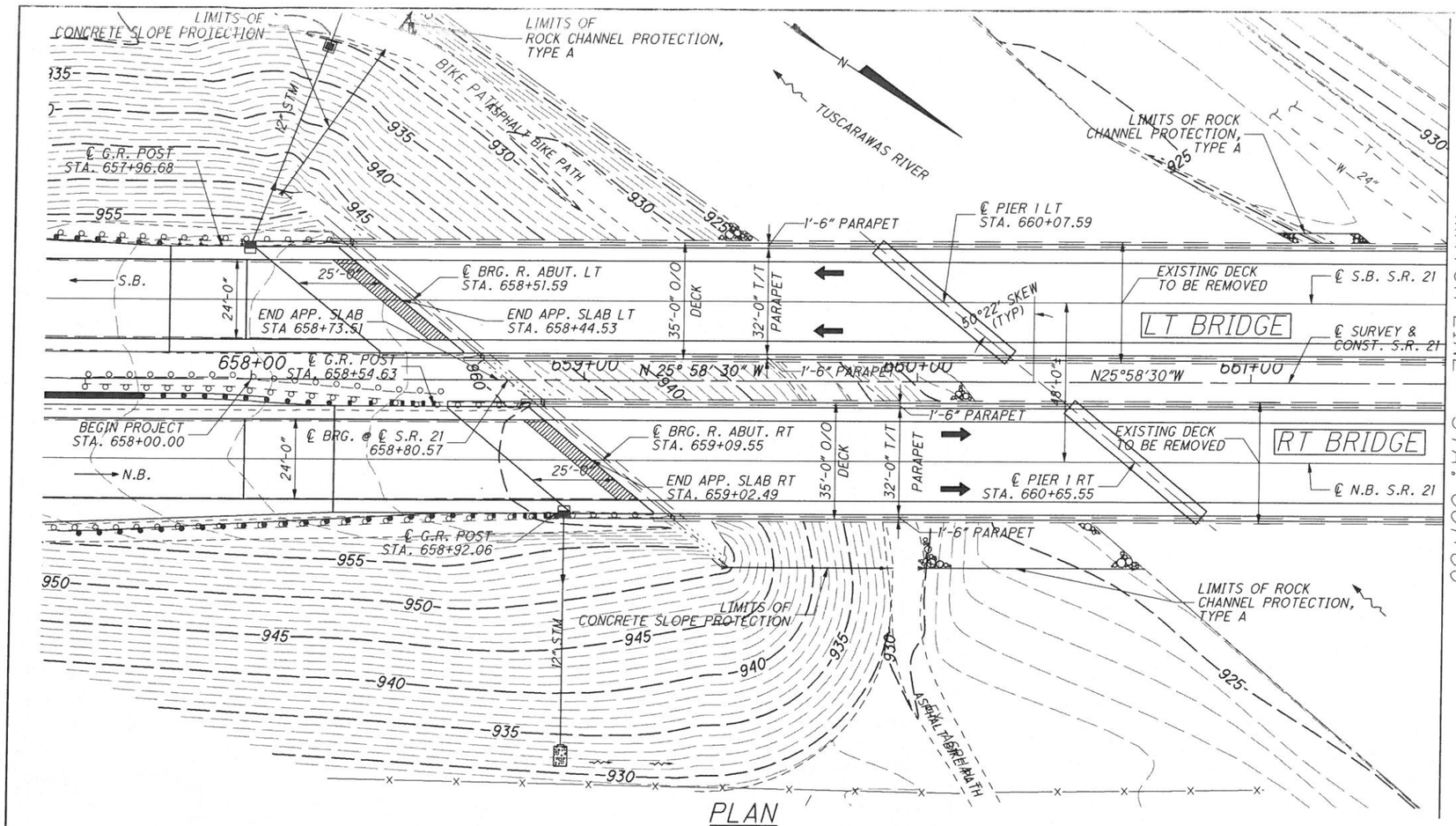

PLAN

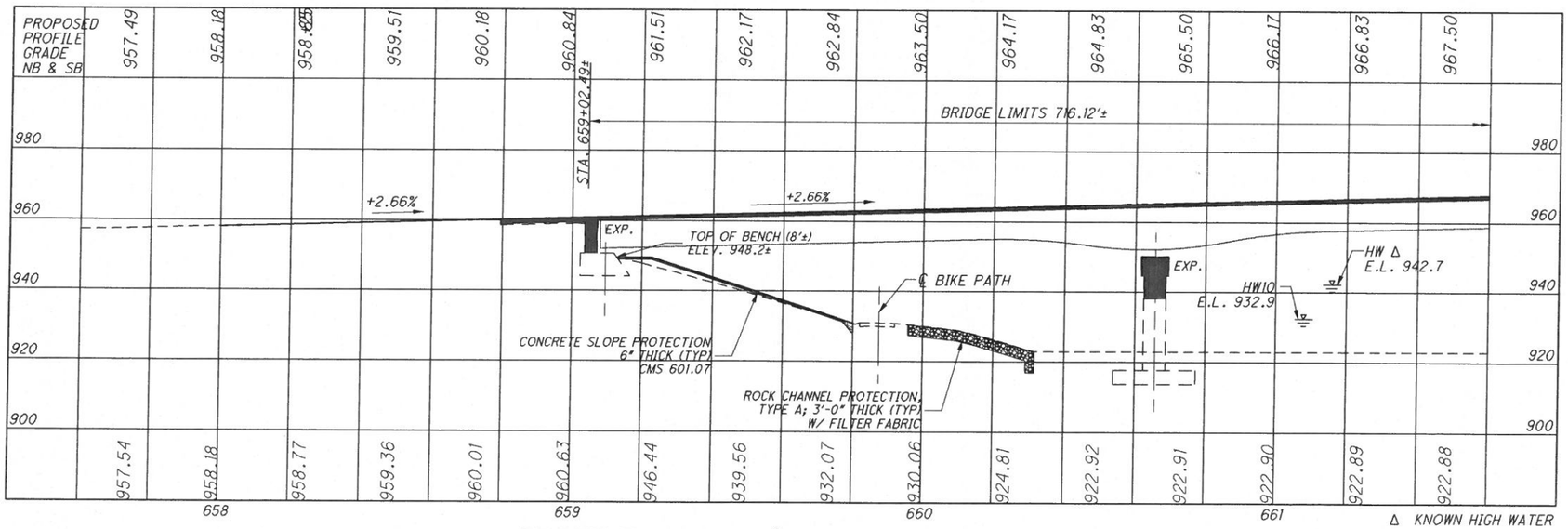

PROFILE (ALONG ℄ N.B. S.R. 21)

BENCHMARK DATA

BM #1 STA. 664+63, ELEV. 938.32, OFFSET 32', RIGHT (NAVD 88)

FOR ADDITIONAL BENCHMARK INFORMATION. SEE ROADWAY PLAN SHEET (81/115)

NOTES

EARTHWORK LIMITS SHOWN ARE APPROXIMATE. ACTUAL SLOPES SHALL CONFORM TO PLAN CROSS SECTIONS.

DESIGN TRAFFIC:
2007 ADT = 12200 2007 ADTT = 1830
2027 ADT = 15700 2027 ADTT = 2355
DIRECTIONAL DISTRIBUTION = 60%

HYDRAULIC DATA (TAKEN FROM EXISTING PLANS)

DRAINAGE AREA = 426 SQ. MILES WATERWAY AREA = 1640 SQ. FT.
Q (50) = 26000 CFS HW10 = 932.9 HW KNOWN = 942.70

EXISTING STRUCTURE

TYPE: TWIN BRIDGE, CONTINUOUS RIVITED STEEL GIRDER W/ REINFORCED CONCRETE DECK AND SUBSTRUCTURE UNITS.

SPANS: 156'-0"; 2 @ 195'-0"±; 156'-0"± C/C BRG
ROADWAY: 33'-6" TOE/TOE PARAPET
LOADING: CF-2000
SKEW: 50°22'00"± R.F.
APPROACH SLABS: 25'± (AS-1-54)
ALIGNMENT: TANGENT
CROWN: NORMAL
STRUCTURAL FILE NUMBER: 7600488L/7600518R
DATE BUILT: 1957; OVERLAY 1989
CONDITION: FAIR

PROPOSED STRUCTURE

PROPOSED WORK:
NEW QC/QA WITH WARRANTY COMPOSITE REINFORCED CONC. DECK ON EXISTING RIVETED GIRDERS. NEW BACKWALLS AND PIER CAPS ON EXISTING SUBSTRUCTURE UNITS. NEW MODULAR EXP. JOINTS AT ABUTMENTS, NEW APPROACH SLABS AND PATCHING SUBSTRUCTURE CONC. REPLACE IN KIND ABUTMENT BEARINGS, REFURBISH AND RESET PIER BEARINGS, REMOVE PACK RUST, CAULK AND PAINT WITH OZEU SYSTEM.

STRUCTURE TYPE:
FOUR-SPAN CONTINUOUS GIRDER WITH COMPOSITE CONCRETE DECK ON CONCRETE SUBSTRUCTURE UNITS.

SPANS: 156'-0"±; 2 @ 195'-0"±; 156'-0"± C/C BRG.
ROADWAY: 32'-0" TOE/TOE SINGLE SLOPE PARAPET;
LOADING: HS25 CASE II AND ALTERNATE MILITARY 60 PSF FUTURE WEARING SURFACE
SKEW: 50°22'00"± R.F.
APPROACH SLABS: 25'-0" LONG (AS-1-81)
ALIGNMENT: TANGENT
CROWN: NORMAL
COORDINATES: LATITUDE 40°49'00" N
LONGITUDE 81°31'50" W

DESIGN AGENCY
KORDA
KORDA/RICHTER ENGINEERING
3900 KATONAH STATE, SUITE 200
MONTGOMERY, OHIO 45241
PH: (513) 469-4811 FAX: (513) 469-4881 WEB: www.korda.com

DESIGNED	DRAWN	REVIEWED	DATE
CLB	JM	RWE	7/27/06
CHECKED	REVISED	STRUCTURE FILE NUMBER	
JKS		7600488L/7600518R	

STARK COUNTY
STA. 658+73.51 TO STA. 665+89.63

SITE PLAN
BRIDGE NO.: STA-21-1248 L & R
OVER TUSCARAWAS RIVER, R.J. CORMAN R.R., AND T.R. 353

STA-21-12.48
PID No. 25433

1 / 34

75
114

H:\Projects\2006\2006-0007 STA-21-12.48 Part 2\Structural-Bridge\Drawings\001_021_1248LSP001.dgn
001_021_1248LSP001.dgn 7/28/2006 11:23:15 AM

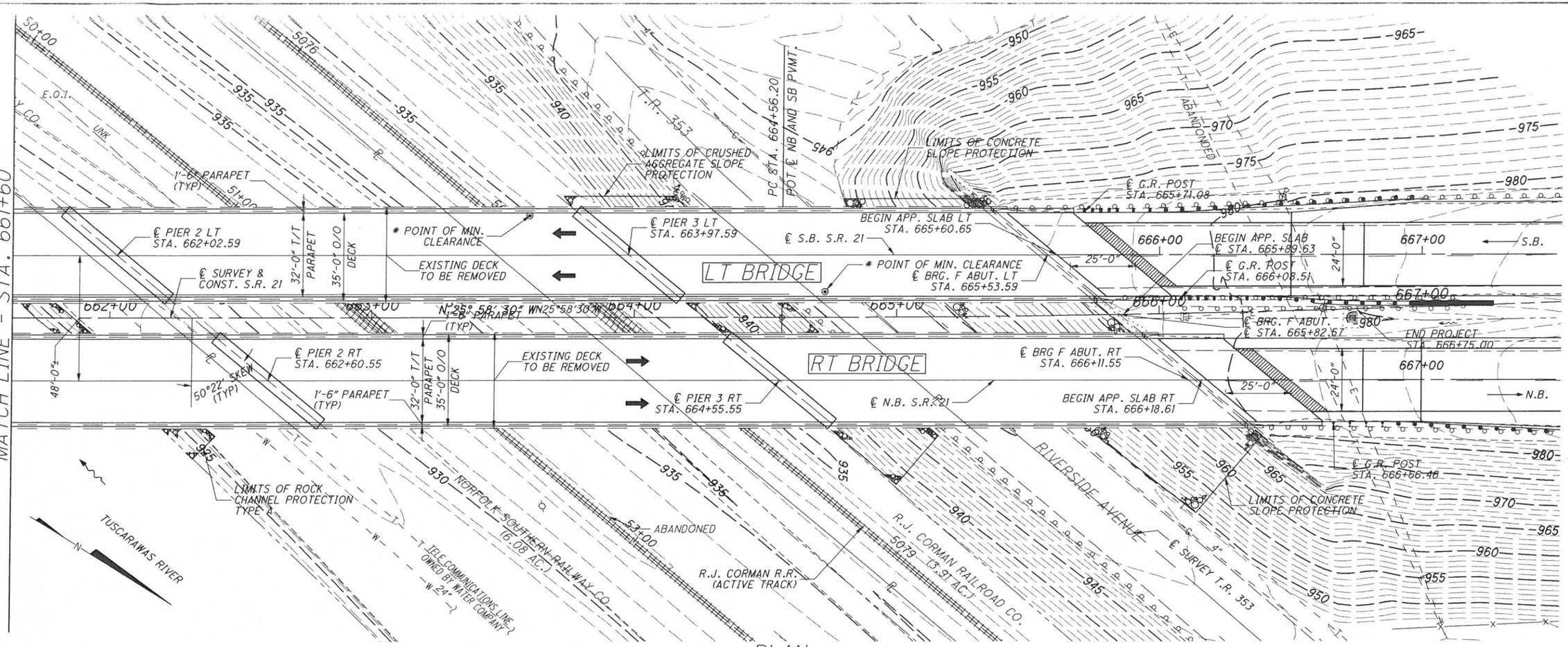

PLAN

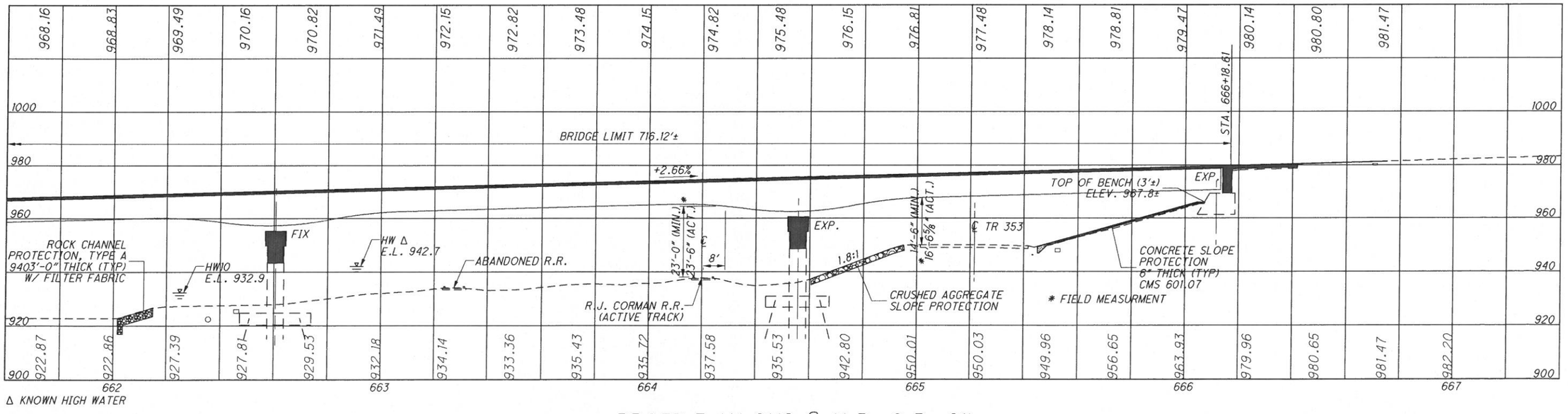

Δ KNOWN HIGH WATER

PROFILE (ALONG ℄ N.B. S.R. 21)

DESIGN AGENCY
KORDA
KORDA/NEMETH ENGINEERING
1650 WATERMARK DRIVE, SUITE 200
COLUMBUS, OHIO 43215-1094 TEL (614) 487-8850
FAX (614) 487-8851 WEB www.korda.com

DESIGNED	DRAWN	REVIEWED	DATE
CLB	JM	RWE	7/27/06
CHECKED	REVISED	STRUCTURE FILE NUMBER	
JKS		7600488L/7600518R	

STARK COUNTY
STA. 658+73.51 TO
STA. 665+89.63

SITE PLAN
BRIDGE NO.: STA-21-1248 L & R
OVER TUSCARAWAS RIVER, R.J. CORMAN R.R., AND T.R. 353

STA-21-12.48
PID No. 25433

\Projects\2006\2006-0007 STA-21-12.48 Part 2\Structural-Bridge\Drawings\002_021_1248LSP002.dgn 7/28/2006 11:23:10 AM
02_021_1248LSP002.dgn

STRUCTURE GENERAL NOTES

REFER TO THE FOLLOWING STANDARD BRIDGE DRAWINGS:

AS-1-81	REVISED	07-19-02
SBR-1-99	REVISED	07-19-02

AND TO THE FOLLOWING SUPPLEMENTAL SPECIFICATIONS:

843	DATED	04-18-03
845	DATED	UNDER DEVELOPMENT
892	DATED	04-15-05
898	DATED	07-16-04

DESIGN SPECIFICATIONS:

THIS STRUCTURE CONFORMS TO "STANDARD SPECIFICATIONS FOR HIGHWAY BRIDGES" ADOPTED BY THE AMERICAN ASSOCIATION OF STATE HIGHWAY AND TRANSPORTATION OFFICALS, 2002, 17TH EDITION, AND THE ODOT BRIDGE DESIGN MANUAL.

DESIGN LOADING:

HS25, CASE II AND THE ALTERNATE MILITARY LOADING FOR THE SUPERSTRUCTURE AND PIER CAPS. HS-20 FOR THE SUBSTRUCTURE UNITS, EXCEPT PIER CAPS.

FUTURE WEARING SURFACE (FWS) OF 60 POUNDS PER SQUARE FOOT.

DESIGN DATA (LOAD FACTOR DESIGN FOR SUPERSTRUCTURE AND PIER CAPS):

QC/QA CONCRETE, CLASS QSC2 - COMPRESSIVE STRENGTH 4500 PSI (SUPERSTRUCTURE)

QC/QA CONCRETE QSC1 - COMPRESSIVE STRENGTH 4000 PSI (PIER CAP)

REINFORCING STEEL - ASTM A615 OR A996, GRADE 60, MINIMUM YIELD STRENGTH 60,000 PSI

STRUCTURAL STEEL - A709 GRADE 36-YIELD STRENGTH 36,000 PSI FOR STRUCTURAL STEEL ITEMS REPLACED AND ASTM A325 HIGH STRENGTH BOLTS FOR RIVET REPLACEMENTS.

DECK PROTECTION METHOD:

EPOXY COATED REINFORCING STEEL, 2-1/2" CONCRETE COVER

MONOLITHIC WEARING SURFACE:

MONOLITHIC WEARING SURFACE IS ASSUMED, FOR DESIGN PURPOSES, TO BE 1 INCH THICK.

ITEM 202, PORTIONS OF SUBSTRUCTURE REMOVED, AS PER PLAN:

REMOVE ABUTMENT BACKWALLS TO ELEVATION OF BEAM SEAT CONSTRUCTION JOINT. REMOVE PIER CAPS TO TOP OF PIER STEM CONSTRUCTION JOINT.

ITEM 202, PORTIONS OF SUPERSTRUCTURE REMOVED, AS PER PLAN:

DESCRIPTION: THIS WORK CONSISTS OF THE REMOVAL OF CONCRETE DECKS INCLUDING PARAPETS, DECK JOINTS AND OTHER APPURTENANCES FROM STEEL SUPPORTING SYSTEMS (GIRDERS, CROSS FRAMES, ETC.). THE PROVISIONS OF ITEM 202 APPLY EXCEPT AS SPECIFIED BY THE PROVISIONS OF ITEM 202 APPLY EXCEPT AS SPECIFIED BY THE FOLLOWING NOTES. PERFORM WORK CAREFULLY DURING DECK REMOVALS TO PROTECT PORTIONS OF SUCH SYSTEMS THAT ARE TO BE SALVAGED AND INCORPORATED INTO THE PROPOSED STRUCTURE. THE USE OF EXPLOSIVES, HEADACHE BALLS AND/OR HOE RAM TYPE OF EQUIPMENT IS PROHIBITED. SUBMIT CONSTRUCTION PLANS ACCORDING TO CMS 501.05.

PROTECTION OF STEEL SUPPORT SYSTEMS: BEFORE DECK SLAB CUTTING IS PERMITTED, DRAW THE OUTLINE OF PRIMARY STEEL MEMBERS IN CONTACT WITH THE BOTTOM OF THE DECK ON THE SURFACE OF DECK. DRILL SMALL DIAMETER PILOT HOLES 2 INCHES OUTSIDE THESE LINES TO CONFIRM THE LOCATION OF FLANGE EDGES. DECK CUTS OVER OR WITHIN 2 INCHES OF FLANGE EDGES SHALL NOT EXTEND LOWER THAN THE BOTTOM LAYER OF DECK SLAB REINFORCING STEEL. CUTS MADE OUTSIDE 2 INCHES OF FLANGE EDGES MAY EXTEND THE FULL DEPTH OF THE DECK. PERFORM WORK CAREFULLY DURING CUTTING OF THE DECK SLAB TO AVOID DAMAGING STEEL MEMBERS THAT ARE TO BE INCORPORATED INTO THE PROPOSED STRUCTURE. REPLACE OR REPAIR STEEL MEMBERS DAMAGED BY THE DECK SLAB CUTTING OPERATIONS AT NO COST TO THE PROJECT. AT LEAST 7 DAYS BEFORE PERFORMING REPAIR WORK, SUBMIT A PROPOSED REPAIR PLAN, DEVELOPED BY AN OHIO REGISTERED PROFESSIONAL ENGINEER TO THE DIRECTOR. OBTAIN THE DIRECTOR'S APPROVAL BEFORE PERFORMING REPAIR.

REMOVAL METHODS: THE CONTRACTOR MAY REMOVE CONCRETE BY CUTTING AND BY MEANS OF HAND OPERATED PNEUMATIC HAMMERS EMPLOYING POINTED OR BLUNTED CHISEL TYPE TOOLS. FOR REMOVALS OVER STRUCTURAL MEMBERS (STEEL GIRDERS) THE CONTRACTOR MAY USE A HAMMER HEAVIER THAN 35 POUNDS BUT NOT TO EXCEED 90 POUNDS UNLESS APPROVED BY THE ENGINEER. REMOVAL METHODS OVER STRUCTURAL MEMBERS SHALL ENSURE ADEQUATE DEPTH CONTROL AND PREVENT NICKING OR GOUGING THE PRIMARY STRUCTURAL MEMBERS.

DUE TO THE POSSIBLE PRESENCE OF ATTACHMENTS (E.G., FINISHING MACHINE, SCUPPER AND FORM SUPPORTS, ETC.) TO EXISTING STRUCTURAL MEMBERS, PERFORM WORK CAREFULLY DURING DECK REMOVAL TO AVOID DAMAGING STRUCTURAL MEMBERS THAT ARE TO REMAIN. REPLACE OR REPAIR STRUCTURAL MEMBERS DAMAGED BY THE REMOVAL OPERATIONS AT NO COST TO THE PROJECT. AT LEAST 7 DAYS BEFORE PERFORMING REPAIR WORK, SUBMIT A PROPOSED REPAIR PLAN, DEVELOPED BY AN OHIO REGISTERED PROFESSIONAL ENGINEER TO THE DIRECTOR. OBTAIN THE DIRECTOR'S APPROVAL BEFORE PERFORMING REPAIR.

EXISTING WELDED ATTACHMENTS: REMOVE EXISTING WELDED ATTACHMENTS (E.G., FINISHING MACHINE AND FORM SUPPORTS; AND SUPPORTS FOR SCUPPERS WHICH ARE TO BE REMOVED) LOCATED IN THE DESIGNATED TENSION PORTIONS OF THE TOP FLANGES OF EXISTING STEEL MEMBERS AND GRIND THE FLANGE SURFACES SMOOTH. CAREFULLY GRIND PARALLEL TO THE FLANGES.

MEASUREMENT & PAYMENT: THE DEPARTMENT WILL MEASURE THE QUANTITY OF REMOVALS ON A LUMP SUM BASIS. THE DEPARTMENT WILL PAY FOR THE ACCEPTED QUANTITIES OF REMOVALS AT THE CONTRACT PRICE FOR ITEM 202, PORTIONS OF STRUCTURE REMOVED, AS PER PLAN.

LOADING LIMITATIONS: NO PART OF THE STRUCTURE SHALL BE SUBJECTED TO UNIT STRESSES THAT EXCEED 136.5% OF THE ALLOWABLE UNIT STRESSES GIVEN IN THE AASHTO STANDARD SPECIFICATIONS FOR HIGHWAY BRIDGES DUE EITHER TO DEMOLITION, ERECTION OR CONSTRUCTION METHODS, OR TO THE USE OR MOVEMENT OF DEMOLITION OR ERECTION EQUIPMENT ON OR ACROSS THE STRUCTURE. STRUCTURAL ANALYSIS COMPUTATIONS, BY A REGISTERED PROFESSIONAL ENGINEER, SHOWING THE ALLOWABLE STRESSES AND THE MAXIMUM STRESSES PRODUCED BY THE CONTRACTOR'S METHODS OR EQUIPMENT SHALL BE SUBMITTED TO THE DIRECTOR FOR REVIEW AND APPROVAL AT LEAST TWO WEEKS PRIOR TO THE START OF THE WORK.

CUT LINE CONSTRUCTION JOINT PREPARATION: SAW CUT BOUNDARIES OF PROPOSED CONCRETE REMOVALS 1 INCH DEEP. REMOVE CONCRETE TO A ROUGH SURFACE. LEAVE THE EXISTING REINFORCING STEEL, IF REQUIRED IN THE PLANS, IN PLACE. INSTALL DOWEL BARS IF SPECIFIED. PRIOR TO CONCRETE PLACEMENT ABRASIVELY CLEAN JOINT SURFACES AND EXISTING EXPOSED REINFORCEMENT TO REMOVE LOOSE AND DISINTEGRATED CONCRETE AND LOOSE RUST. THOROUGHLY CLEAN THE JOINT SURFACE AND EXPOSED REINFORCEMENT OF ALL DIRT, DUST, RUST OR OTHER FOREIGN MATERIAL BY THE USE OF WATER, AIR UNDER PRESSURE, OR OTHER METHODS THAT PRODUCE SATISFACTORY RESULTS. EXISTING REINFORCING STEEL DOES NOT HAVE TO HAVE A BRIGHT STEEL FINISH, BUT REMOVE ALL PACK AND LOOSE RUST. THOROUGHLY DRENCH EXISTING CONCRETE SURFACES WITH CLEAN WATER AND ALLOW TO DRY TO A DAMP CONDITION BEFORE PLACING CONCRETE.

SUBSTRUCTURE CONCRETE REMOVAL: REMOVE CONCRETE BY MEANS OF APPROVED PNEUMATIC HAMMERS EMPLOYING POINTED AND BLUNT CHISEL TOOLS. HYDRAULIC HOE-RAM TYPE HAMMERS WILL NOT BE PERMITTED. THE WEIGHT OF THE HAMMER SHALL NOT BE MORE THAN 35 POUNDS FOR REMOVAL WITHIN 18 INCHES OF PORTIONS TO BE PRESERVED. OUTSIDE THE 18 INCH LIMIT, THE CONTRACTOR MAY USE HAMMERS NOT EXCEEDING 90 POUNDS UPON THE APPROVAL OF THE ENGINEER. DO NOT PLACE PNEUMATIC HAMMERS IN DIRECT CONTACT WITH REINFORCING STEEL THAT IS TO BE RETAINED IN THE REBUILT STRUCTURE.

EXISTING STRUCTURE VERIFICATION: DETAILS AND DIMENSIONS SHOWN ON THESE PLANS PERTAINING TO THE EXISTING STRUCTURE HAVE BEEN OBTAINED FROM PLANS OF THE EXISTING STRUCTURE AND FROM FIELD OBSERVATIONS AND MEASUREMENTS. CONSEQUENTLY, THEY ARE INDICATIVE OF THE EXISTING STRUCTURE AND THE PROPOSED WORK BUT THEY SHALL BE CONSIDERED TENTATIVE AND APPROXIMATE. THE CONTRACTOR IS REFERRED TO CMS SECTIONS 102.05, 105.02 AND 513.04.

BASE CONTRACT BID PRICES UPON A RECOGNITION OF THE UNCERTAINTIES DESCRIBED ABOVE AND UPON A PREBID EXAMINATION OF THE EXISTING STRUCTURE. HOWEVER, THE DEPARTMENT WILL PAY FOR ALL PROJECT WORK BASED UPON ACTUAL DETAILS AND DIMENSIONS WHICH HAVE BEEN VERIFIED IN THE FIELD.

DEMOLITION OVER RAILROADS: THE CONTRACTOR SHALL SUBMIT PLANS AND PROCEDURES FOR THE PROPOSED DEMOLITION OF STRUCTURES OVER RAILROAD PROPERTIES, AS PER CMS 501.06. THIS SUBMITTAL SHALL INCLUDE THE METHOD FOR PROTECTING THE TRACK FROM ACCIDENTAL DROPPING OF CONCRETE. CONCRETE SHALL NOT BE ALLOWED TO INTENTIONALLY FALL OR DROP ONTO THE RAILWAY PROPERTY.

A TEMPORARY VERTICAL CLEARANCE OF 20 FEET FROM THE TOP OF RAIL AND A TEMPORARY HORIZONTAL CLEARANCE OF 12 FEET FROM THE CENTERLINE OF THE TRACK MUST BE MAINTAINED AT ALL TIMES TO ANY FORM WORK, FALSE WORK OR OTHER TEMPORARY OBSTRUCTION DURING CONSTRUCTION OF THIS BRIDGE.

PROTECTION OF VEHICULAR, BIKEPATH AND CANOE TRAFFIC: PRIOR TO DEMOLITION OF ANY PORTIONS OF THE EXISTING SUPERSTRUCTURE, SUBMIT PLANS FOR THE PROTECTION OF TRAFFIC UNDER THE STRUCTURE TO THE DIRECTOR AT LEAST 30 DAYS BEFORE CONSTRUCTION BEGINS. THESE PLANS SHALL INCLUDE PROVISIONS FOR ANY DEVICES AND STRUCTURES THAT MAY BE NECESSARY TO ENSURE PROTECTION. PROTECT TUSCARAWAS RIVER CANOE TRAFFIC AT ALL TIMES. ALSO PROVIDE THE FOLLOWING CLEARANCES AT ALL TIMES EXCEPT AS OTHERWISE APPROVED BY THE DIRECTOR. RIVERSIDE AVE. (TR353) - MAINTAIN TWO WAY, TWO LANE TRAFFIC. MINIMUM 14'-6" VERTICAL CLEARANCE. STARK COUNTY BIKE PATH - MAINTAIN MINIMUM 8'-0" VERTICAL AND 8'-0" HORIZONTAL OPENING AT ALL TIMES. ALL COSTS ASSOCIATED WITH THIS TRAFFIC PROTECTION WILL BE INCLUDED WITH ITEM 202 FOR PAYMENT.

DESIGN AGENCY
KORDA
KORDA/RICHARD ENGINEERING
6640 BUSCH BLVD., SUITE 340
COLUMBUS, OHIO 43229-1800
TEL (614) 431-8900
FAX (614) 431-4888
WEB www.korda.com

DESIGNED	DRAWN	REVIEWED	DATE
CAB	CAB	RWE	7/27/06
CHECKED	REVISED	STRUCTURE FILE NUMBER	
JKS	----	7600488L/7600518R	

GENERAL NOTES
BRIDGE NO.: STA-21-1248 L & R
OVER TUSCARAWAS RIVER, R.J. CORMAN R.R. AND T.R.353

STA-21-12.48
PID No. 25433

3 / 34

83
115

7/31/2006 7:27:36 AM
...\Projects\2006\2006-0007 STA-21-12.48 Part 2\Structural-Bridge\Drawings\003_02LI248LGN00I.dgn
...3_02LI248LGN00I.dgn

MAINTENANCE OF TRAFFIC:

TRAFFIC SHALL BE MAINTAINED USING CROSS OVER METHOD OF MOT ON THE SR 21 LT AND RT STRUCTURES ON RIVERSIDE DRIVE (TR 353), THE RAILROAD AND THE BIKEWAY AT ALL TIMES. (SEE MAINTENANCE OF OF TRAFFIC PLANS 9/48 TO 10/48 .)

ITEM 509 REINFORCING STEEL, REPLACEMENT OF EXISTING REINFORCING STEEL, AS PER PLAN: REPLACE ALL EXISTING REINFORCING BARS DEEMED BY THE ENGINEER TO BE UNUSABLE BECAUSE OF CORROSION. THE DEPARTMENT WILL MEASURE THE REPLACEMENT REINFORCING STEEL BY THE NUMBER OF POUNDS ACCEPTED IN PLACE.

REPLACE ALL EXISTING REINFORCING STEEL BARS WHICH ARE TO BE INCORPORATED INTO THE NEW WORK AND ARE DEEMED BY THE ENGINEER TO BE MADE UNUSABLE BY CONCRETE REMOVAL OPERATIONS WITH NEW EPOXY COATED REINFORCING STEEL OF THE SAME SIZE AT NO COST TO THE DEPARTMENT.

ITEM 513 - STRUCTURAL STEEL MEMBERS, LEVEL UF, AS PER PLAN:
ALL REQUIREMENTS OF 513 APPLY TO SHOP FABRICATED MEMBERS. PERFORM WORK FOR FIELD FABRICATED MEMBERS ACCORDING TO ITEM 513, EXCEPT AS MODIFIED HEREIN. THE DEPARTMENT WILL NOT REQUIRE THE CONTRACTOR PERFORMING FIELD FABRICATION TO BE PRE-QUALIFIED AS SPECIFIED IN SUPPLEMENT 1078. SUBMIT A WRITTEN LETTER OF MATERIAL ACCEPTANCE, 501.06, TO THE ENGINEER. PROVIDE SHOP DRAWINGS ACCORDING TO 513.04 OR SUPPLY THE ENGINEER WITH "AS-BUILT" DRAWINGS MEETING 513.04 AFTER COMPLETION OF FIELD FABRICATION. THE ENGINEER WILL REVIEW THE SUBMITTED DRAWINGS FOR CONCURRENCE WITH THE FINAL AS-BUILT CONDITION. IF NECESSARY, THE ENGINEER MAY CONTACT THE OFFICE OF STRUCTURAL ENGINEERING FOR TECHNICAL ASSISTANCE. IF THE ENGINEER IS SATISFIED WITH THE "AS-BUILT" DRAWINGS AND THE DELIVERED MATERIALS, SUPPLY A COPY OF THE DRAWINGS, STAMPED AND DATED, ALONG WITH MICROFILM, TO THE STRUCTURAL, WELDING AND METALS SECTION OF THE OFFICE OF MATERIAL MANAGEMENT FOR RECORD PURPOSES.

THE FOLLOWING MEMBERS ARE INCLUDED IN THIS ITEM: MISC CROSS-FRAMES, STIFFENERS, AND PLATES.

ITEM 516 - REFURBISHING BEARING DEVICES, AS PER PLAN:
THIS ITEM SHALL INCLUDE ALL WORK NECESSARY TO PROPERLY ALIGN BRIDGE BEARINGS AS WELL AS THEIR CLEANING AND PAINTING. INCLUDED SHALL BE THE DISASSEMBLY OF THE BEARINGS, HAND TOOL CLEANING (GRINDING IF NECESSARY), PAINTING ACCORDING TO ITEM 514, REPLACEMENT OF ANY DAMAGED SHEET LEAD WITH PREFORMED BEARING PADS (711.21), INSTALLATION OF NEW ANCHOR BOLTS, INSTALLATION OF ANY NECESSARY STEEL SHIMS OF THE SAME SIZE AS THE BEARINGS TO PROVIDE A SNUG FIT, REALIGNMENT OF THE UPPER BEARING PLATE BY REMOVING EXISTING WELDS AND REWELDING SO THAT THE BEARINGS ARE VERTICALLY ALIGNED AT 60 DEGREES F, LUBRICATING SLIDING SURFACES, AND REASSEMBLY OF THE BEARINGS. ASSURE ALL BEARINGS ARE SHIMMED ADEQUATELY AND THAT NO GIRDERS AND/OR BEARING DEVICES ARE "FLOATING". AT NO ADDITIONAL COST TO THE STATE, THE CONTRACTOR MAY INSTALL NEW BEARINGS OF THE SAME TYPE AS THE EXISTING IN PLACE OF REFURBISHING THE BEARINGS. ALL WORK SHALL BE TO THE SATISFACTION OF THE ENGINEER. PAYMENT FOR ALL OF THE ABOVE DESCRIBED LABOR AND MATERIALS WILL BE MADE AT THE CONTRACT PRICE BID FOR ITEM 516 - REFURBISH BEARING DEVICES, AS PER PLAN.

ITEM 516, JACKING AND TEMPORARY SUPPORT OF SUPERSTRUCTURE, AS PER PLAN:

THIS WORK CONSISTS OF RAISING OR RE-POSITIONING EXISTING GIRDERS TO THE DIMENSIONS AND REQUIREMENTS DEFINED IN THE PROJECT PLANS.

SUBMIT CONSTRUCTION PLANS IN ACCORDANCE WITH CMS 501.05.

IF, DURING THE JACKING OPERATIONS, DAMAGE TO THE STRUCTURE IS VISUALLY OBSERVED, IMMEDIATELY CEASE THE JACKING OPERATION AND INSTALL SUPPORTS TO THE SATISFACTION OF THE ENGINEER. ANALYZE THE DAMAGE AND SUBMIT A METHOD OF CORRECTION TO THE ENGINEER FOR APPROVAL. THE DEPARTMENT WILL NOT PAY FOR THE COST OF REQUIRED REPAIRS. THE BRIDGE BEARINGS SHALL BE FULLY SEATED AT ALL CONTACT AREAS. IF FULL SEATING IS NOT ATTAINED, SUBMIT A REPAIR PLAN TO THE ENGINEER. THE DEPARTMENT WILL NOT PAY FOR THE REPAIR COSTS TO ENSURE FULL SEATING ON BEARINGS.

THE DEPARTMENT WILL MEASURE THIS WORK ON A LUMP SUM BASIS.

THE DEPARTMENT WILL PAY FOR THE ACCEPTED QUANTITIES AT THE CONTRACT PRICE FOR ITEM 516, JACKING AND TEMPORARY SUPPORT OF SUPERSTRUCTURE, AS PER PLAN.

ITEM SPECIAL 519 - CRACK REPAIR BY EPOXY INJECTION, AS PER PLAN:
PRIOR TO THE SURFACE CLEANING SPECIFIED IN 519.04 AND WITHIN 24 HOURS OF PLACING CRACK REPAIR MATERIAL, BLAST CLEAN ALL SURFACES TO BE PATCHED. ACCEPTABLE METHODS INCLUDE HIGH-PRESSURE WATER BLASTING WITH OR WITHOUT ABRASIVES IN THE WATER, ABRASIVE BLASTING WITH CONTAINMENT, OR VACUUM ABRASIVE BLASTING.

ITEM 601 - CONCRETE SLOPE PROTECTION:
EXISTING SLOPES AT THE ABUTMENTS SHALL BE REDONE WITH 6" THICK CONCRETE TO SLOPES AS SHOWN ON SITE PLAN.

ITEM 843 - PATCHING CONCRETE STRUCTURES, WITH TROWELABLE MORTAR, AS PER PLAN:
PRIOR TO THE SURFACE CLEANING SPECIFIED IN SS843.05 AND WITHIN 24 HOURS OF PLACING PATCHING MATERIAL, BLAST CLEAN ALL SURFACES TO BE PATCHED INCLUDING THE EXSPOSED REINFORCING STEEL. ACCEPTABLE METHODS INCLUDE HIGH-PRESSURE WATER BLASTING WITH OR WITHOUT ABRASIVES IN THE WATER, ABRASIVE BLASTING WITH CONTAINMENT, OR VACUUM ABRASIVE BLASTING.

ITEM SPECIAL 845 METALIZING EXISTING STRUCTURAL STEEL:
THIS ITEM IS SHOWN AS AN ALTERNATE TO ITEM 514 FIELD PAINTING OF STRUCTURAL STEEL.

ITEM 898 - QA/QC CONCRETE, SUPERSTRUCTURE (APPROACH SLAB), AS PER PLAN:
FURNISH APPROACH SLABS CONFORMING TO CMS 526 EXCEPT CONCRETE SHALL BE IN ACCORDANCE WITH SUPPLEMENTAL SPECIFICATION 898, QC/QA CONCRETE, CLASS QSC2. THE ACCEPTED QUANTITIES SHALL INCLUDE: CONCRETE APPROACH SLABS, PARAPETS, REINFORCING STEEL, JOINT FILLERS, JOINT SEALERS, JOINT SEALS, AND WATERPROOFING. THE DEPARTMENT WILL MEASURE APPROACH SLABS BY THE NUMBER OF SQUARE YARDS. THE DEPARTMENT WILL INITIALLY PAY THE FULL BID PRICE TO THE CONTRACTOR UPON COMPLETING THE WORK. THE DEPARTMENT WILL CALCULATE THE FINAL ADJUSTED PAYMENT ACCORDING TO 898.17 AND INCLUDE APPROACH SLAB CONCRETE AND DECK CONCRETE IN THE SAME LOT TO DETERMINE FINAL PAY FACTORS.

ITEM 898 - QC/QA CONCRETE, CLASS QSC2, SUPERSTRUCTURE (DECK), AS PER PLAN:
THE DEPARTMENT WILL CALCULATE THE FINAL ADJUSTED PAYMENT ACCORDING TO 898.17 AND INCLUDE APPROACH SLAB CONCRETE IN THE SAME LOT TO DETERMINE FINAL PAY FACTORS.

BRIDGE REHABILITATION WORK (PROPOSED)

SEQUENCE OF REHABILITATION WORK:

- MAINTAIN SR-21 TRAFFIC USING CROSS-OVER CONSTRUCTION METHOD
- REMOVE THE EXISTING DECK, APPROACH SLABS AND ABUTMENT BACKWALLS
- JACK AND TEMPORARILY SUPPORT GIRDERS ON TEMPORARY SUPPORT SYSTEM AT ABUTMENTS AND PIERS
- REMOVE AND REPLACE PIER CAPS
- REMOVE AND REPLACE ABUTMENT BEARINGS IN KIND
- CLEAN, PAINT, AND RESET PIER BEARINGS
- LOWER AND RESET GIRDERS ON BEARINGS
- REMOVE PACK RUST, REPAIR AND/OR REPLACE DEFECTIVE STRUCTURAL STEEL MEMBERS AND RIVETS
- SURFACE PREPARATION, PAINT PRIME AND INTERMEDIATE COAT USING OZEU PAINT SYSTEM, ALL STRUCTURAL STEEL MEMBER SURFACES
- CAULK ALL PACK-RUST CLEANED AREAS OF STEEL GIRDER PLATE LOCATIONS
- PAINT FINISH COAT USING OZEU PAINT SYSTEM
- METALIZING IN LIEU OF PAINTING, IF APPROVED BY THE ENGINEER
- CONSTRUCT THE NEW DECK AND BACKWALLS AT ABUTMENTS
- INSTALL MODULAR EXPANSION JOINT SYSTEM AT ABUTMENTS
- PLACE NEW APPROACH SLABS
- PLACE NEW PARAPETS ON DECK AND APPROACH SLABS
- SEAL CONCRETE SURFACES USING EPOXY-URETHANE SEALER

NOTE: AT THE OPTION OF CONTRACTOR AND AFTER APPROVAL BY THE ENGINEER AN ALTERNATE SEQUENCE OF CONSTRUCTION CAN BE USED TO PERFORM PROPOSED REHABILITATION WORK

DESIGN AGENCY
KORDA
KORDA/RINEHART ENGINEERING
8800 LYRA DRIVE, SUITE 450
COLUMBUS, OHIO 43240-2479
PH (614) 847-1500
FAX (614) 847-1884
WEB www.korda.com

DESIGNED	DRAWN	REVIEWED	DATE
CAB	CAB	RWE	7/27/06
CHECKED	REVISED	STRUCTURE FILE NUMBER	
JKS		7600488L/7600518R	

GENERAL NOTES
BRIDGE NO.: STA-21-1248 L & R
OVER TUSCARAWAS RIVER, R.J. CORMAN R.R. AND T.R. 353

STA-21-12.48
PID No. 25433

4/34

84/115

7/28/2006 11:23:06 AM
\Projects\2006\2006-0007 STA-21-12.48 Part 2\Structural-Bridge\Drawings\004_021_1248LGN002.dgn
004_021_1248LGN002.dgn

DEMOLITION DEBRIS: THE CONTRACTOR SHALL TAKE PRECAUTIONS TO AVOID AND/OR LIMIT DEMOLITION DEBRIS FROM ENTERING THE STREAM. ANY MATERIAL THAT DOES NOT FALL INTO THE STREAM SHALL BE REMOVED AS SOON AS POSSIBLE.

STREAM CHANNEL EXCAVATION: THE CONTRACTOR SHALL TAKE ALL PRECAUTIONS NECESSARY TO PREVENT ANY INCIDENTAL DISCHARGES ASSOCIATED WITH THE EXCAVATION AND HAULING OF MATERIAL FROM THE STREAM CHANNEL. THIS PERTAINS TO ANY EXCAVATION OPERATIONS SUCH AS EXCAVATION FOR TEMPORARY SUPPORT STRUCTURE, AND ROCK CHANNEL PROTECTION AND REMOVAL OF ANY TEMPORARY FILL ASSOCIATED WITH CONSTRUCTION OPERATIONS.

UTILITY LINES: THE UTILITY(IES) SHALL BORE ALL EXPENSE INVOLVED IN RELOCATING (INSTALLING) THE AFFECTED UTILITY LINES. THE CONTRACTOR AND UTILITY(IES) ARE TO COOPERATE BY ARRANGING THEIR WORK IN SUCH A MANNER THAT INCONVENIENCE TO EITHER WILL BE HELD TO A MINIMUM.

EXISTING STRUCTURE PLANS: THE ORIGINAL DESIGN PLANS AND THE REHABILITATION PLANS SHALL BE EXAMINED BY PROSPECTIVE BIDDERS AT THE OFFICES OF ODOT, DISTRICT 4, 2088 SOUTH ARLINGTON STREET, AKRON, OHIO. THE CONTRACTOR SHALL FAMILIARIZE HIMSELF WITH THE DRAWINGS.

ABBREVIATIONS:

ABUT.	- ABUTMENT	MIN.	- MINIMUM
APP.	- APPROACH	MISC.	- MISCELLANEOUS
B/B	- BOTTOM TO BOTTOM	M.O.T.	- MAINTENANCE OF TRAFFIC
BOT	- BOTTOM	N.B.	- NORTH BOUND
BRG.	- BEARING	N-E	- NORTHEAST
BTW.	- BETWEEN	N-W	- NORTHWEST
C/C	- CENTER TO CENTER	N.S.	- NEAR SIDE
C.J.	- CONSTRUCTION JOINT	NTS.	- NOT TO SCALE
C.I.P.	- CAST IN PLACE	O/O	- OUT TO OUT
℄	- CENTERLINE	PCB	- PORTABLE CONCRETE BARRIER
CLR.	- CLEARANCE	PEJF	- PREFORMED EXPANSION JOINT FILLER
CONST.	- CONSTRUCTION		
DWG.	- DRAWING	P.G.	- PROFILE GRADE
E.F.	- EACH FACE	R.ABUT & R.A.	- REAR ABUTMENT
EL.	- ELEVATION	R.F.	- RIGHT FORWARD
EXP.	- EXPANSION	R.R.	- RIGHT REAR
EQ. SPA.	- EQUAL SPACES	RT.	- RIGHT
E.W.	- EACH WAY	S.B.	- SOUTH BOUND
EXIST. & EX.	- EXISTING	S.R.	- STATE ROUTE
F.ABUT & F.A.	- FORWARD ABUTMENT	S-E	- SOUTHEAST
		S-W	- SOUTHWEST
F.P.	- FORWARD PIER	SER	- SERIES
F.S.	- FAR SIDE	SHLDR	- SHOULDER
FWD.	- FORWARD	SPA.	- SPACES
GR.	- GROUND	SPL	- SPLICE
G.R.	- GUARDRAIL	STA.	- STATION
HORIZ.	- HORIZONTAL	STD.	- STANDARD
H.W.	- HIGH WATER	T/B	- TOP OF BENCH
JT.	- JOINT	T/S	- TOP OF SLOPE
L.F.	- LEFT FORWARD	T&B	- TOP AND BOTTOM
L.R.	- LEFT REAR	TYP.	- TYPICAL
LT.	- LEFT	U.N.O.	- UNLESS NOTED OTHERWISE
		WW	- WINGWALL

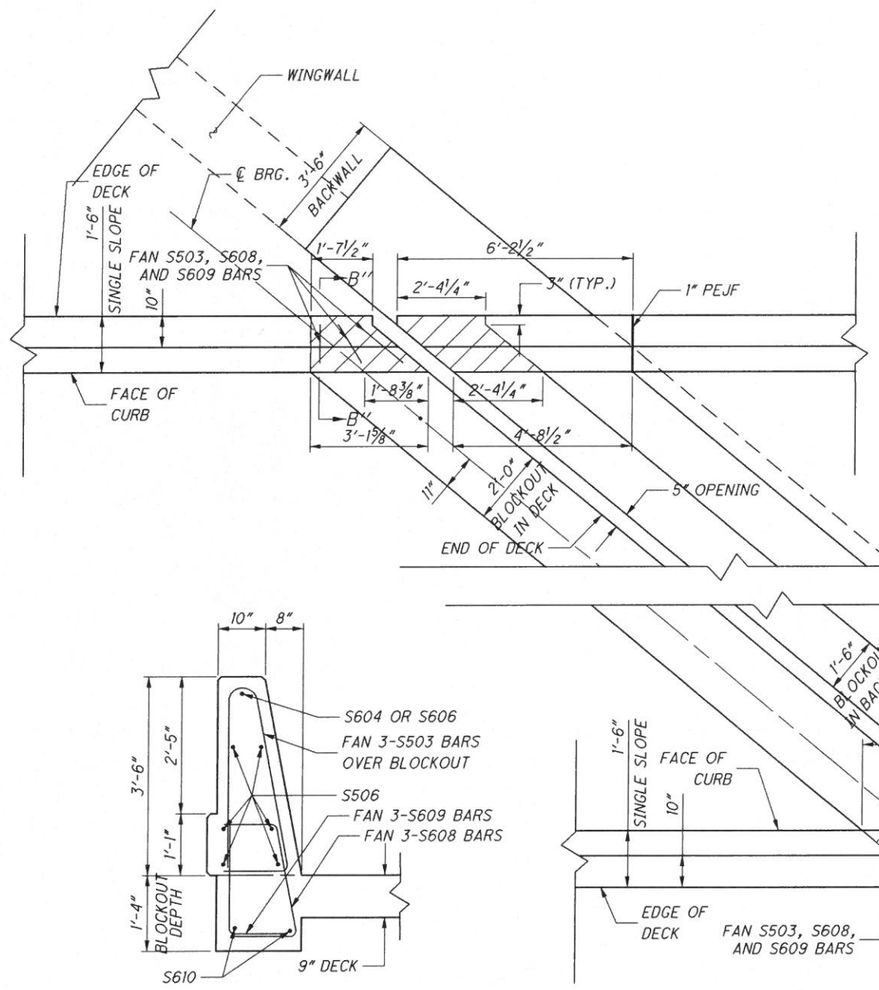

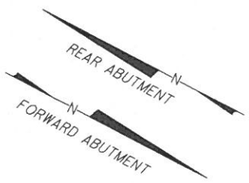

LEGEND:

BLOCKOUT AREAS OF DECK AND ABUTMENT BACKWALL UNDER PARAPET

NOTE:
FOR REINFORCING IN PARAPET ON ABUTMENT BACKWALL BLOCKOUT AREAS, SEE SHEET 24/34 .

SECTION B"-B"
PARAPET OVER BLOCKOUT

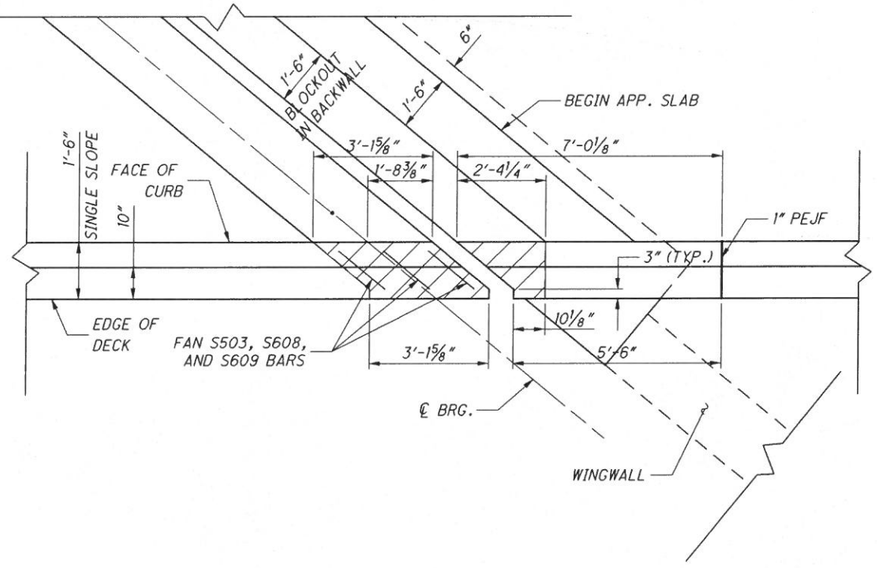

PLAN
BLOCKOUT AREAS IN DECK AND BACKWALL
AT ABUTMENT EXPANSION JOINTS
F.ABUT LT. BRIDGE SHOWN
(F.ABUT RT. BRIDGE AND R.ABUT LT. & RT. BRIDGE SIMILAR)

DESIGN AGENCY
KORDA
KORDA/RITCHIE ENGINEERING
COLUMBUS, OHIO

DESIGNED	DRAWN	REVIEWED	DATE
CAB	CAB	RWE	7/27/06
CHECKED	REVISED	STRUCTURE FILE NUMBER	
JKS		7600488L/7600518R	

GENERAL NOTES, ABBREVIATIONS, AND BLOCKOUT PLAN
BRIDGE NO.: STA-21-1248 L & R
OVER TUSCARAWAS RIVER, R.J. CORMAN R.R. AND T.R.353

STA-21-12.48
PID No. 25433

5/34

85/115

7/28/2006 11:23:04 AM
...\Projects\2006\2006-0007 STA-21-12.48 Part 2\Structural-Bridge\Drawings\005_02L_I248LGN003.dgn
...5_02L_I248LGN003.dgn

ESTIMATED QUANTITIES

CALCS BY: DATE:
CHECK BY: DATE:

ITEM	ITEM EXT.	LEFT BRIDGE TOTAL	RIGHT BRIDGE TOTAL	UNIT	DESCRIPTION	LEFT BRIDGE				RIGHT BRIDGE				SEE SHEET NO.
						SUPER	ABUT	PIER	GEN'L	SUPER	ABUT	PIER	GEN'L	
202	11203	LUMP	LUMP		PORTIONS OF STRUCTURE REMOVED, OVER 20 FOOT SPAN, AS PER PLAN									
202	22900			SQ YD	APPROACH SLAB REMOVED									
503	11100	LUMP	LUMP		COFFERDAMS, CRIBS AND SHEETING									
509	10000			POUND	EPOXY COATED REINFORCING STEEL									
510	10000			EACH	DOWEL HOLES WITH NONSHRINK, NONMETALLIC GROUT									
512	10100			SQ YD	SEALING OF CONCRETE SURFACES (EPOXY-URETHANE)									
513	10201			POUND	STRUCTURAL STEEL MEMBERS, LEVEL UF, AS PER PLAN									
513	17001			FT	STRUCTURAL STEEL MEMBERS, MODULAR EXPANSION JOINT, LEVEL UF, AS PER PLAN									
513	20000			EACH	WELDED STUD SHEAR CONNECTORS									
513	95000			FT	STRUCTURAL STEEL MISC.: PACK RUST REPAIR AND CAULKING									
513	95030			EACH	STRUCTURAL STEEL MISC.: REPLACE EXISTING RIVETS WITH HIGH STRENGTH BOLTS									
514	00050			SQ FT	SURFACE PREPARATION OF EXISTING STRUCTURAL STEEL									
514	00056			SQ FT	FIELD PAINTING OF EXISTING STRUCTURAL STEEL, PRIME COAT									
514	00060			SQ FT	FIELD PAINTING STRUCTURAL STEEL, INTERMEDIATE COAT									
514	00066			SQ FT	FIELD PAINTING STRUCTURAL STEEL, FINISH COAT									
514	00504			MAN HOUR	GRINDING FINS, TEARS, SLIVERS ON EXISTING STRUCTURAL STEEL									
516	46801			EACH	REFURBISH AND RESET BEARING, AS PER PLAN									
516	46900			EACH	BEARING DEVICE, MISC. (EXISTING ABUTMENT BEARINGS REPLACED IN KIND)									
516	47001	LUMP	LUMP		JACKING AND TEMPORARY SUPPORT OF SUPERSTRUCTURE, AS PER PLAN									
SPECIAL	51912610			FT	CONCRETE REPAIR BY EPOXY INJECTION INCLUDING SURFACE PREPARATION (SEE PROPOSAL NOTE)									
526	25001			SQ YD	REINFORCED CONCRETE APPROACH SLABS (T=15"), AS PER PLAN									
601	20000			SQ YD	CRUSHED AGGREGATE SLOPE PROTECTION									
601	21000			SQ YD	CONCRETE SLOPE PROTECTION									
843	50001			SQ FT	PATCHING CONCRETE STRUCTURES WITH TROWELABLE MORTAR, AS PER PLAN									
SPECIAL	845			SQ FT	METALIZING EXISTING STRUCTURAL STEEL, AS PER PLAN									
892	10200			CU YD	QC/QA CONCRETE, CLASS QSC2, SUPERSTRUCTURE (DECK) WITH WARRANTY									
898	11000			CU YD	QC/QA CONCRETE, CLASS QSC2, SUPERSTRUCTURE (PARAPET) WITH WARRANTY									
898	20000			CU YD	QC/QA CONCRETE, CLASS QSC1, SUBSTRUCTURE									

DESIGN AGENCY
KORDA
KORDA/RICHARD ENGINEERING
660 MATHESON DRIVE, SUITE 120, ... TEL (954) 487-4850 ... FAX (954) 487-4851
COMMERCIAL POINTE, FORT LAUDERDALE, FLORIDA

DESIGNED	DRAWN	REVIEWED	DATE
CAB	CAB	RWE	7/27/06
CHECKED	REVISED	STRUCTURE FILE NUMBER	
JKS		760048L/760051R	

ESTIMATED QUANTITIES
BRIDGE NO.: STA-21-1248 L & R
OVER TUSCARAWAS RIVER, R.J. CORMAN R.R. AND T.R.353

STA-21-12.48
PID No. 25433

6 / 34

86
115

7/28/2006 11:23:01 AM
\\Projects\2006\2006-0007 STA-21-12.48 Part 2\Structural-Bridge\Drawings\006_021_1248LE0001.dgn
006_021_1248LE0001.dgn

NOTE:
PROVIDE AN ADDITIONAL STIFFENER ANGLE 8 X 8 X 3/4 TO BE BOLTED TO GIRDER WEB AT TEMPORARY SUPPORT LOCATIONS PRIOR TO JACKING OPERATIONS IF AN EXISTING STIFFENER ANGLE IS NOT LOCATED AT THE TEMPORARY SUPPORT LOCATION. ADDITIONAL STIFFENERS TO BE LEFT IN PLACE.

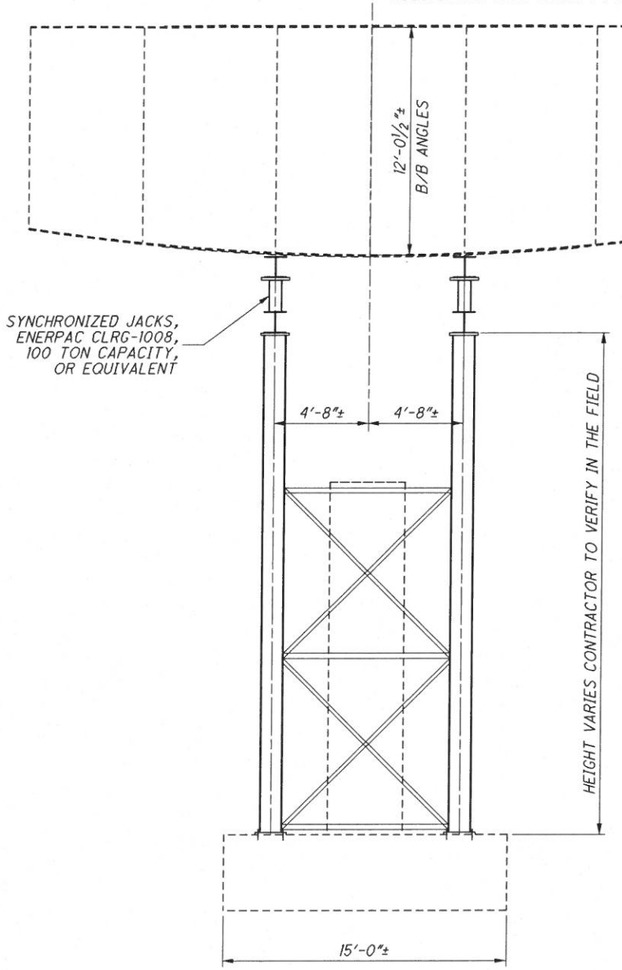

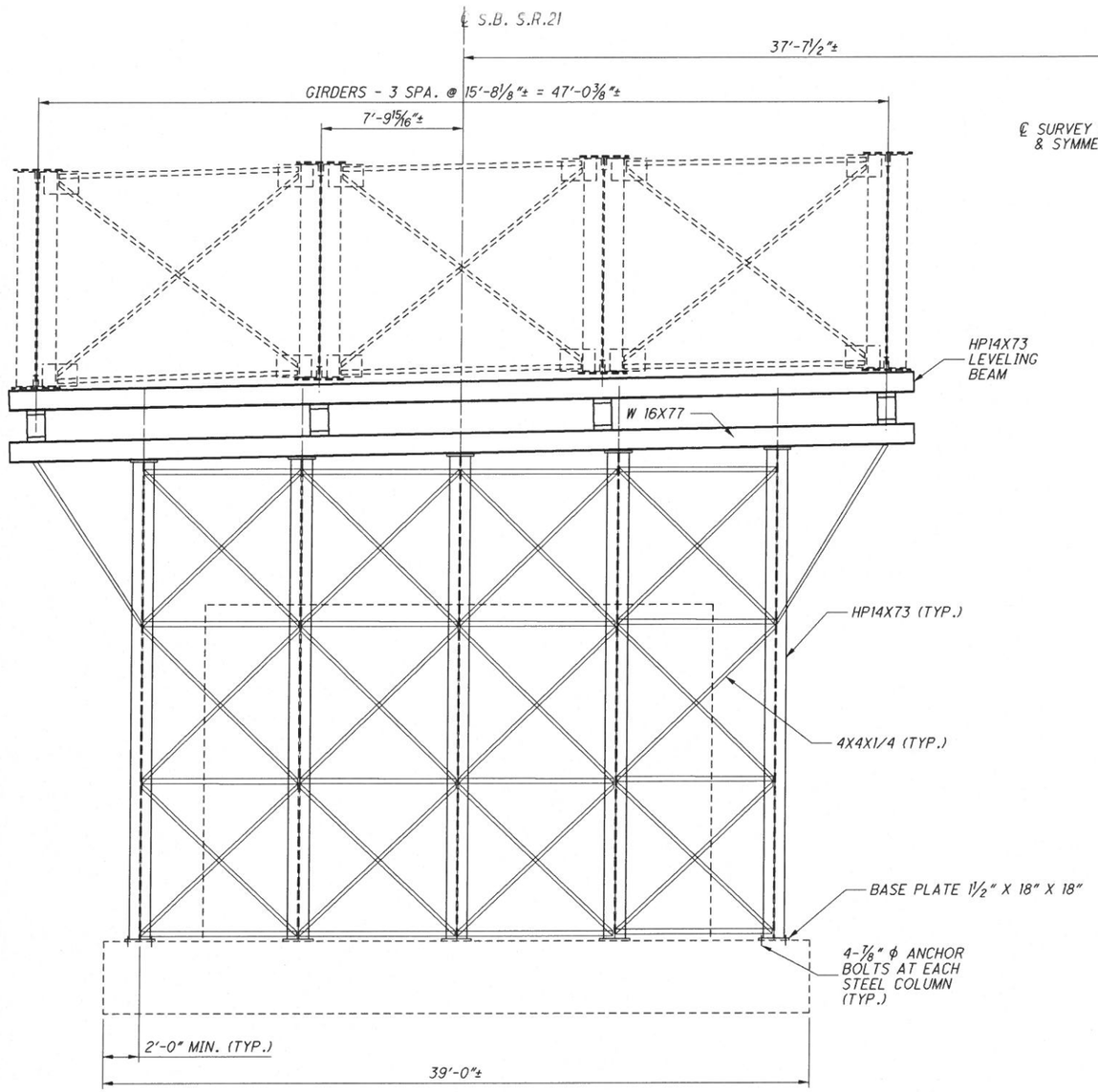

TEMPORARY SUPPORT AT PIERS

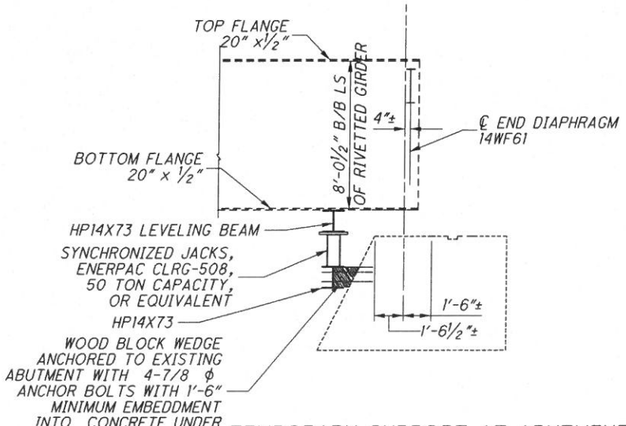

TEMPORARY SUPPORT AT ABUTMENTS

NOTE:
SUPPORT LOAD = 60 TONS AT EACH SIDE OF PIER AT EACH GIRDER.

SUPPORT LOAD = 22 TONS AT EACH ABUTMENT GIRDER.

PROVIDE SHIM PLATES FOR PROPER BEARING OF GIRDERS ON LEVELING BEAM.

THE CONTRACTOR SHALL SUBMIT PLANS FOR A JACKING SYSTEM, INCLUDING THE TEMPORARY SUPPORTS PREPARED AND SEALED BY AN OHIO REGISTERED PROFESSIONAL ENGINEER TO THE DIRECTOR FOR APPROVAL 30 DAYS PRIOR TO START OF WORK

DESIGN AGENCY
KORDA
KORDA/NEMETH ENGINEERING
1650 WATERMARK DRIVE, SUITE 200, COLUMBUS, OHIO 43215-1094
WEB www.korda.com
TEL (614) 487-1650
FAX (614) 487-0891

DESIGNED	DRAWN	REVIEWED	DATE
CAB	CAB	RWE	7/27/06
CHECKED	REVISED	STRUCTURE FILE NUMBER	
JKS		7600488L/7600518R	

JACKING AND TEMPORARY SUPPORT LAYOUT
BRIDGE NO.: STA-21-1248 L & R
OVER TUSCARAWAS RIVER, R.J. CORMAN R.R. AND T.R.353

STA-21-12.48
PID No. 25433

\Projects\2006\2006-0007 STA-21-12.48 Part 2\Structural-Bridge\Drawings\007_021_1248LPC001.dgn 7/28/2006 11:23:00 AM
07_021_1248LPC001.dgn

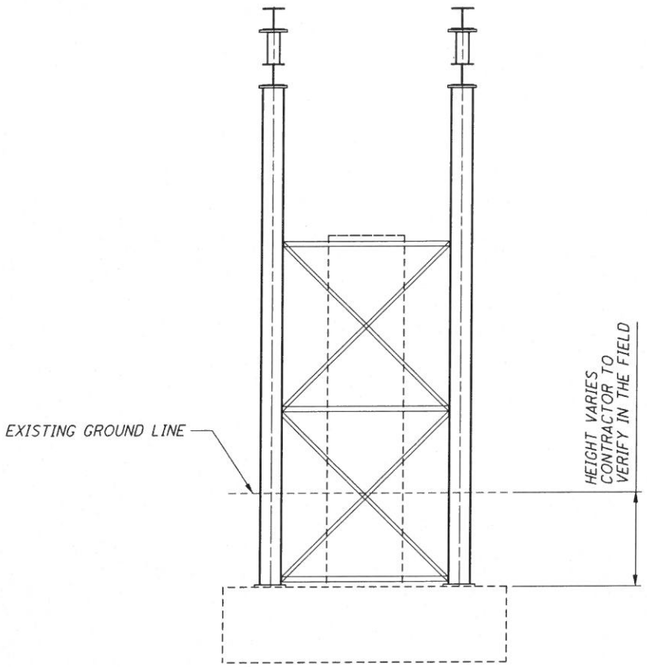

NOTE:
EXCAVATION FOR TEMPORARY SUPPORT INCLUDED WITH ITEM 516 JACKING AND TEMPORARY SUPPORT OF SUPERSTRUCTURE, AS PER PLAN

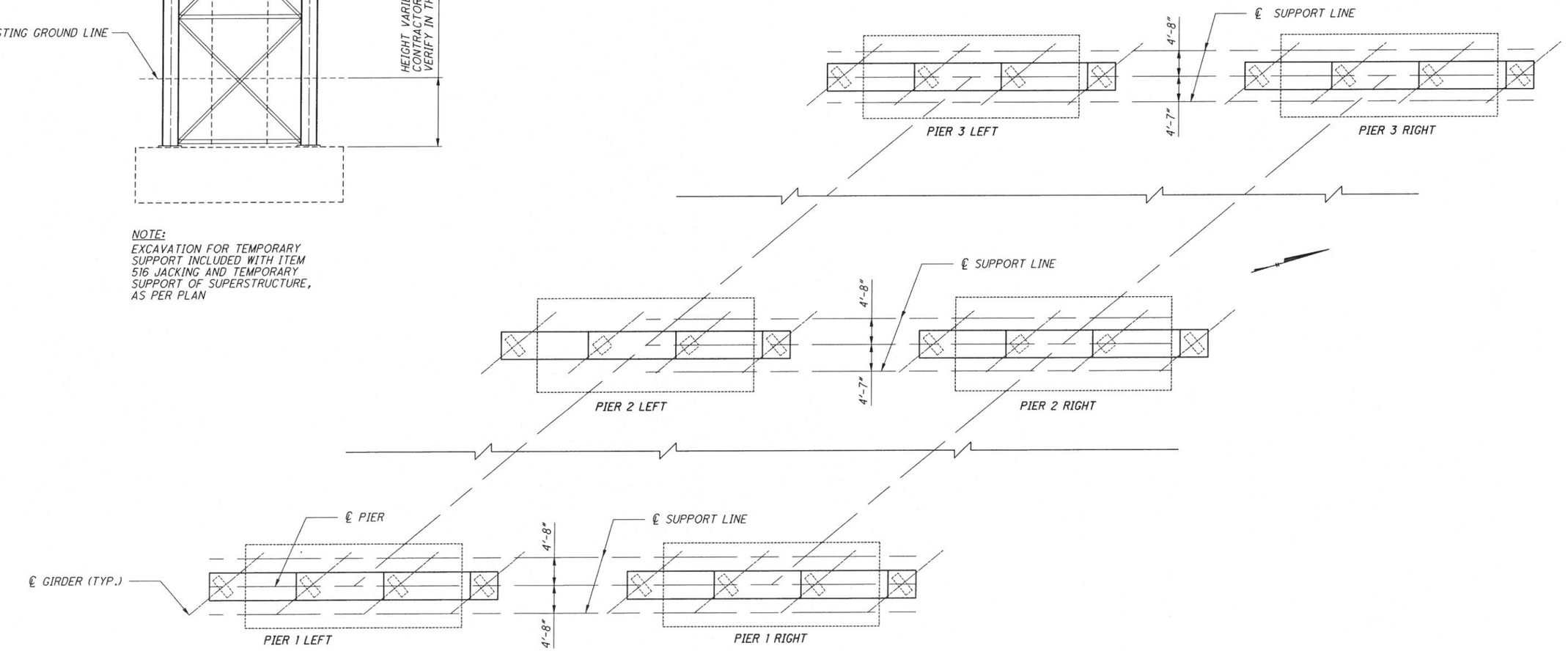

PIER BEARING SCHEMATIC

DESIGN AGENCY
KORDA
KORDA/NEMETH ENGINEERING
1650 WATERMARK DRIVE, SUITE 200
COLUMBUS, OHIO 43215-1094
WEB www.korda.com
TEL (614) 487-1650
FAX (614) 487-8881

DESIGNED	DRAWN	REVIEWED	DATE
CAB	CAB	RWE	7/27/06
CHECKED	REVISED	STRUCTURE FILE NUMBER	
JKS		7600488L/7600518R	

JACKING AND TEMPORARY SUPPORT LAYOUT
BRIDGE NO.: STA-21-1248 L & R
OVER TUSCARAWAS RIVER, R.J. CORMAN R.R. AND T.R.353

STA-21-12.48
PID No. 25433

\Projects\2006\2006-0007 STA-21-12.48 Part 2\Structural-Bridge\Drawings\008_021_1248LPC002.dgn 7/28/2006 11:22:57 AM
08_021_1248LPC002.dgn

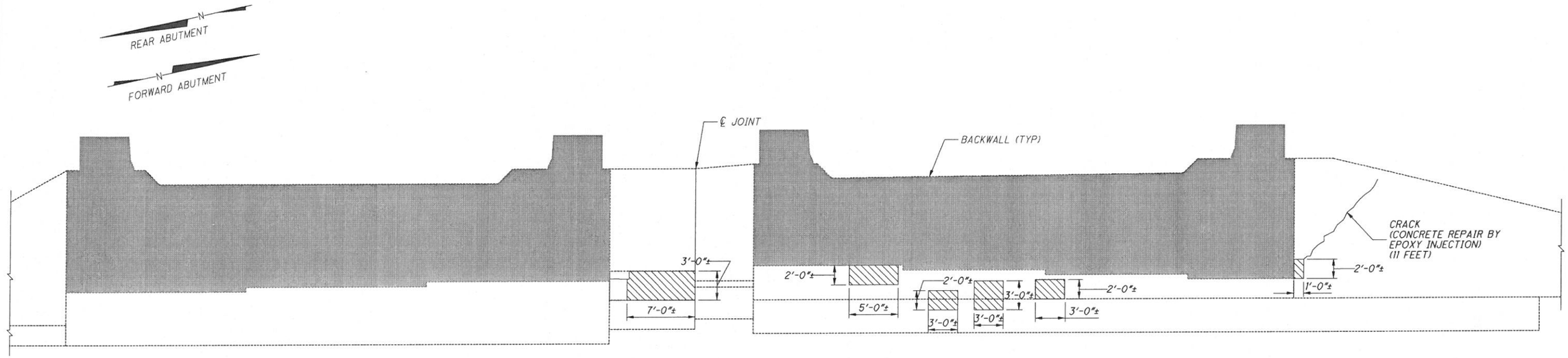

PATCHING TABLE FIELD MEASUREMENT (6-28-04 TO 6-30-04)			
LOCATION	AREA MEASURED	DETERIORATION FACTOR	PAY AREA ESTIMATED
R ABUT RT BR	4 SQ. FT.	1.25	5.00 SQ. FT.
F ABUT LT BR	21 SQ. FT.	1.25	26.25 SQ. FT.
F ABUT RT BR	33 SQ. FT.	1.25	41.25 SQ. FT.
		TOTAL	72.50 SQ. FT.

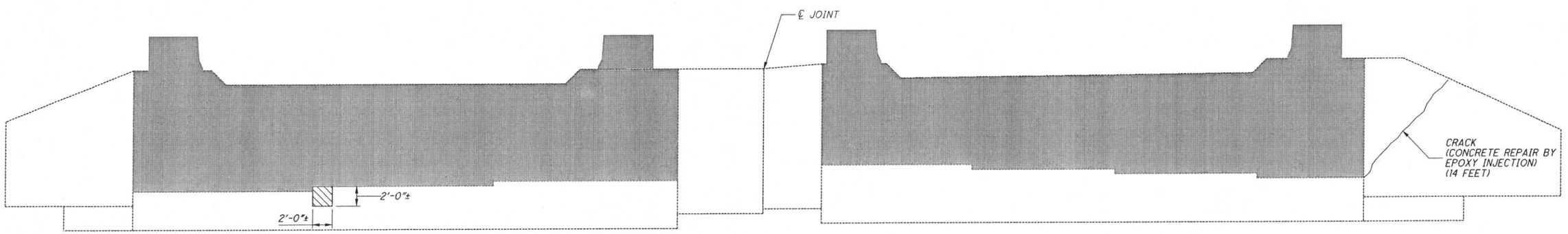

NOTES:
- DRAWINGS ARE SCHMATIC (NOT TO SCALE)
- ITEM 843 PATCHING CONCRETE STRUCTURES WITH TROWELABLE MORTAR FOR ESTIMATED PATCHING QUANTITIES, A FACTOR OF 1.25 HAS BEEN USED TO MULTIPLY FIELD MEASURED AREAS TO ACCOUNT FOR FUTURE DETERIORATION.
- ACTUAL PATCHING AREAS TO BE DETERMINED AND APPROVED IN THE FIELD BY THE ENGINEER.

LEGEND:

INDICATES AREAS TO BE PATCHED AS PER ITEM 843 PATCHING CONCRETE STRUCTURES WITH TROWELABLE MORTER, AS PER PLAN

INDICATES AREAS TO BE REMOVED BACKWALLS AND PARAPETS

DESIGN AGENCY
KORDA
KORDA/RINEHART ENGINEERING
6161 Busch Blvd., Suite 110
COLUMBUS, OHIO
WEB: www.korda.com
TEL (614) 431-4900
FAX (614) 487-8881

DESIGNED	DRAWN	REVIEWED	DATE
JKS	AF	RWE	7/27/06
CHECKED	REVISED	STRUCTURE FILE NUMBER	
CAB		7600488L/7600518R	

ABUTMENT REMOVAL AND PATCHING DETAILS

BRIDGE NO.: STA-21-1248 L & R
OVER TUSCARAWAS RIVER, R.J. CORMAN R.R. AND T.R.353

STA-21-12.48
PID No. 25433

9 / 34

89
115

7/28/2006 11:22:55 AM
...\Projects\2006\2006-0007 STA-21-12.48 Part 2\Structural-Bridge\Drawings\009_02L1248LAB001.dgn
09_02L1248LAB001.dgn

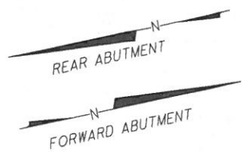

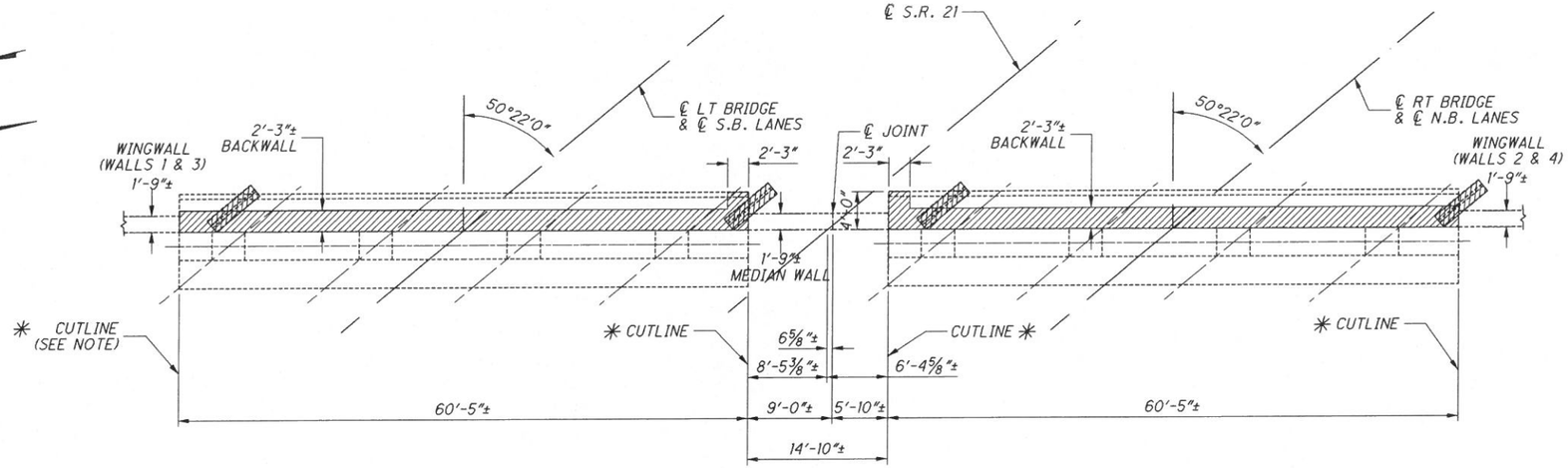

FORWARD ABUTMENT
STA-21-1248 LT BRIDGE

PLAN

FORWARD ABUTMENT
STA-21-1248 RT BRIDGE

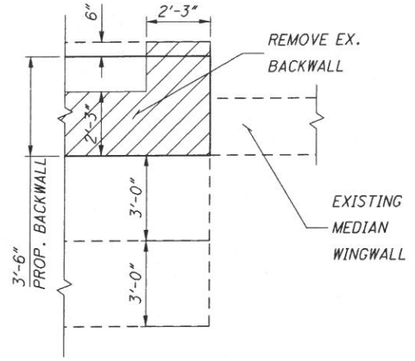

PLAN
BACKWALL REMOVAL
AT MEDIAN

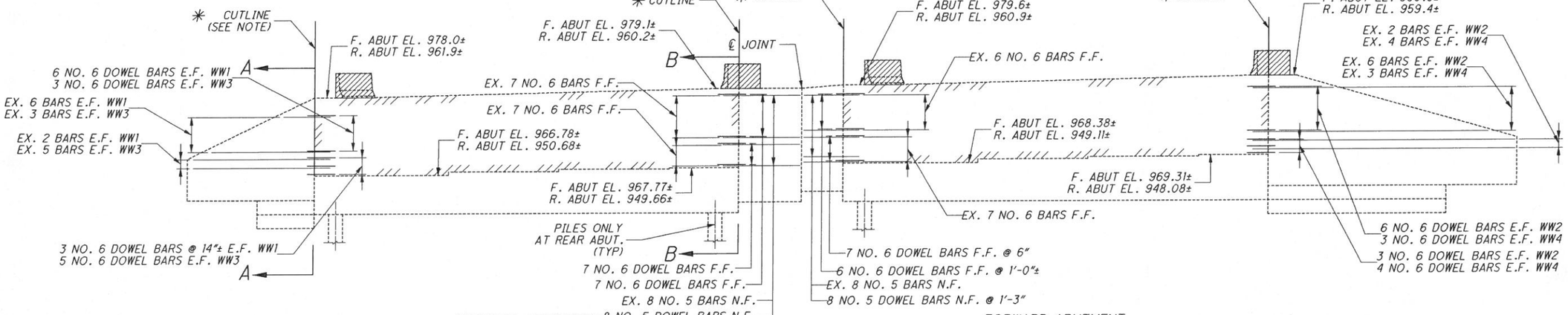

FORWARD ABUTMENT
STA-21-1248 LT BRIDGE

ELEVATION

FORWARD ABUTMENT SHOWN (REAR ABUTMENT SIMILAR)
BACKWALL IN ELEVATION
NOT COMPLETELY HATCHED FOR CLARITY

FORWARD ABUTMENT
STA-21-1248 RT BRIDGE

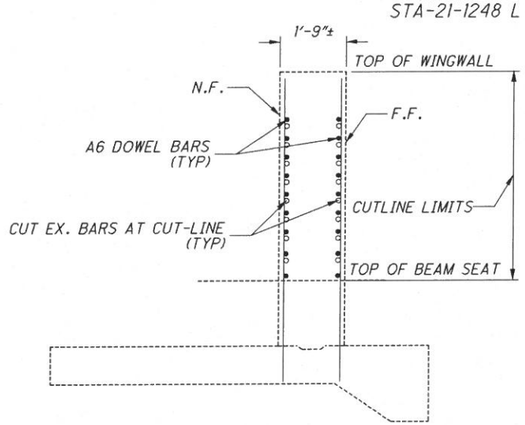

SECTION A-A
WINGWALL 1 SHOWN
(WINGWALLS 2 THROUGH 4 SIMILAR, SEE ELEVATION VIEW)

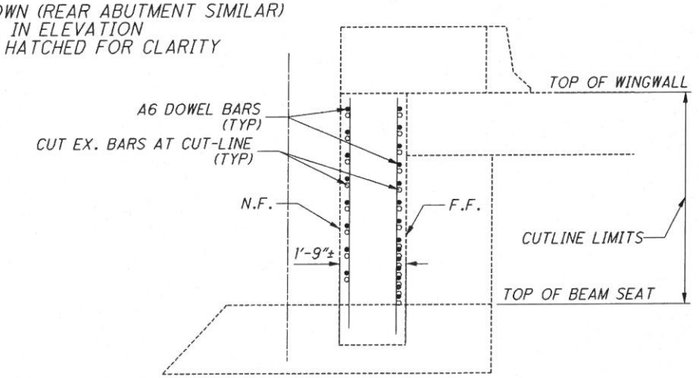

TYPICAL SECTION B-B
MEDIAN WINGWALL - FWD ABUT LT. BR SHOWN
(OTHER MEDIAN WINGWALLS SIMILAR)

LEGEND

	--	REMOVAL
EX	--	EXISTING WINGWALL REBARS
WW1	--	WINGWALL NO. 1
N.F.	--	NEAR FACE
F.F.	--	FAR FACE
E.F.	--	EACH FACE

NOTES:

- DRILL 4'-0" LONG A6 DOWEL BARS 1'-0" INTO WINGWALLS. ALL DOWEL BARS ARE NO. 6 SIZE BARS.
- ✳ - CUT EXISTING WINGWALL BARS AT CUTLINE FOR BACKWALL REMOVAL
- CUT WINGWALL FROM TOP OF WINGWALL TO TOP OF GIRDER SEAT ALONG CUTLINE TO REMOVE THE BACKWALLS OF THE ABUTMENTS.

DESIGN AGENCY
KORDA
KORDA/RENKEN ENGINEERING
8123 MONTGOMERY ROAD, SUITE 320
CINCINNATI, OHIO 45236
WEB www.korda.com
TEL (513) 487-2880
FAX (513) 487-2885

DESIGNED	DRAWN	REVIEWED	DATE
JKS	JM	RWE	7/27/06
CHECKED	REVISED	STRUCTURE FILE NUMBER	
CAB		7600488L/7600518R	

ABUTMENT REMOVAL DETAILS
BRIDGE NO.: STA-21-1248 L & R
OVER TUSCARAWAS RIVER, R.J. CORMAN R.R. AND T.R. 353

STA-21-12.48
PID No. 25433

10 / 34

90
115

7/28/2006 11:22:53 AM
...\Projects\2006\2006-0007 STA-21-12.48 Part 2\Structural-Bridge\Drawings\010_021_1248LAB002.dgn
021_1248LAB002.dgn

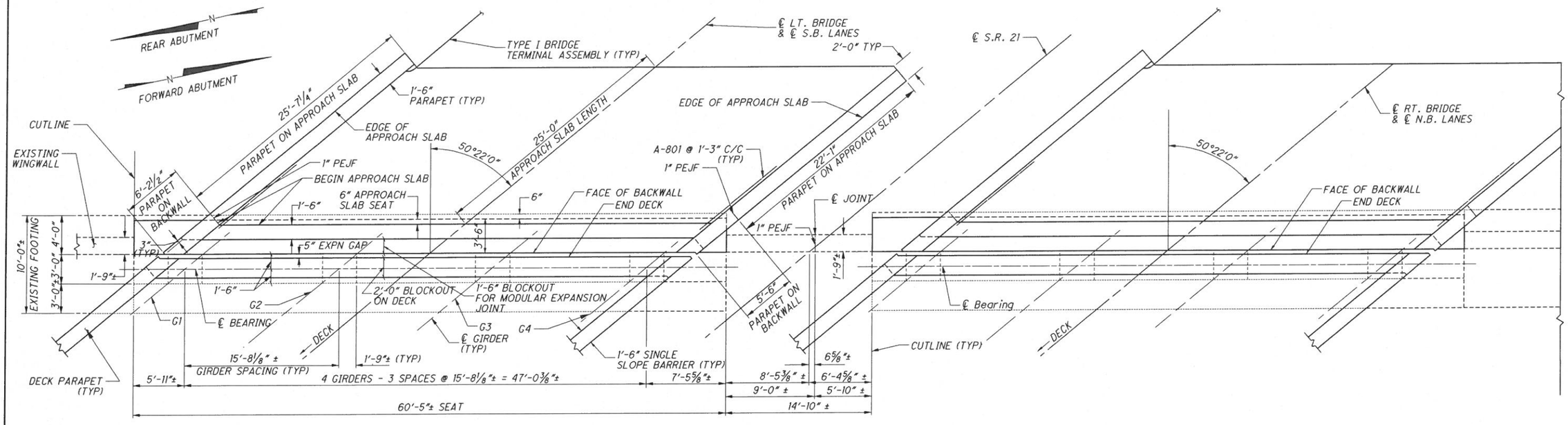

LEFT BRIDGE PLAN

RIGHT BRIDGE PLAN

(DIMENSIONS AND DETAILS SIMILAR TO LEFT BRIDGE)

PLAN

FORWARD ABUTMENT SHOWN
(REAR ABUTMENT SIMILAR AND OPPOSITE HAND)

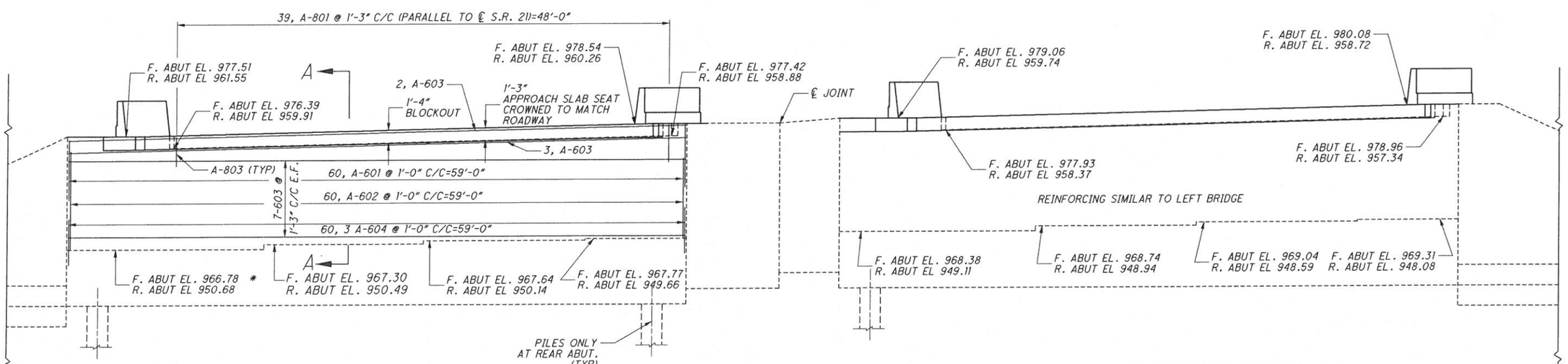

LEFT BRIDGE ELEVATION

ELEVATION

FORWARD ABUTMENT SHOWN
(REAR ABUTMENT SIMILAR AND OPPOSITE HAND)

RIGHT BRIDGE ELEVATION

* NOTE: ALL EXISTING ABUTMENT DIMENSIONS AND ELEVATIONS SHOWN ARE PLUS MINUS.

DESIGN AGENCY
KORDA
KORDA/RICHARD ENGINEERING
1133 www.korda.com
Columbus, Ohio 43205-1008 — FAX (614) 487-8881

DESIGNED	DRAWN	REVIEWED	DATE
JKS	AF	RWE	7/27/06
CHECKED	REVISED	STRUCTURE FILE NUMBER	
CAB		7600488L/7600518R	

ABUTMENT LAYOUT DETAILS
BRIDGE NO.: STA-21-1248 L & R
OVER TUSCARAWAS RIVER, R.J. CORMAN R.R. AND T.R.353

STA-21-12.48
PID No. 25433

11 / 34

91
115

7/28/2006 11:22:52 AM
\Projects\2006\2006-0007 STA-21-12.48 Part 2\Structural-Bridge\Drawings\011_021_1248LAB003.dgn
021_1248LAB003.dgn

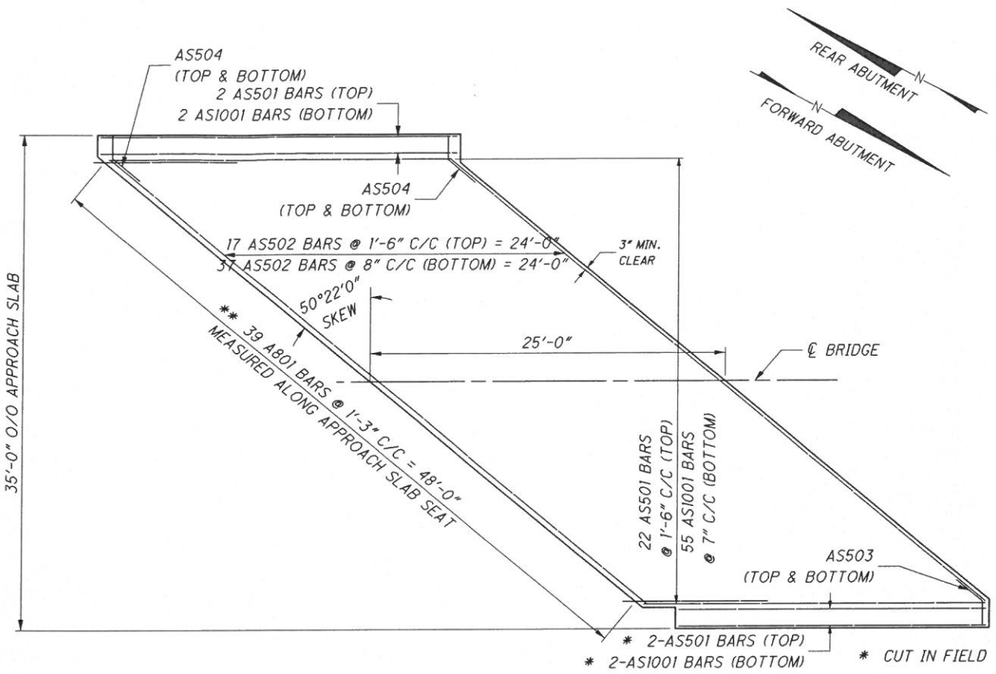

* CUT IN FIELD

** SEE SHEET 11/34 FOR FURTHER DETAILS

APPROACH SLAB REINFORCING PLAN

LT. BRIDGE FWD APPROACH SLAB SHOWN (N-W)
(N-E, S-W, AND S-E APPROACH SLABS SIMILAR)

NOTE:

- APPROACH SLAB PARAPETS NOT SHOWN FOR CLARITY. SEE SHEET 24/34 FOR APPROACH SLAB PARAPET DETAILS.
- FOR OTHER APPROACH SLAB DETAILS, SEE ODOT STANDARD DRAWING AS-1-81.

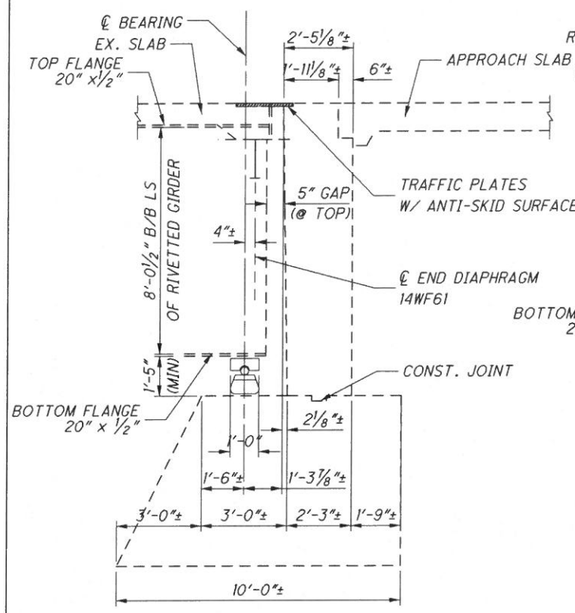

EXPANSION JOINT AT EXISTING ABUTMENTS

FORWARD ABUTMENT SHOWN (NO PILES)
(REAR ABUTMENT SIMILAR W/ PILES)

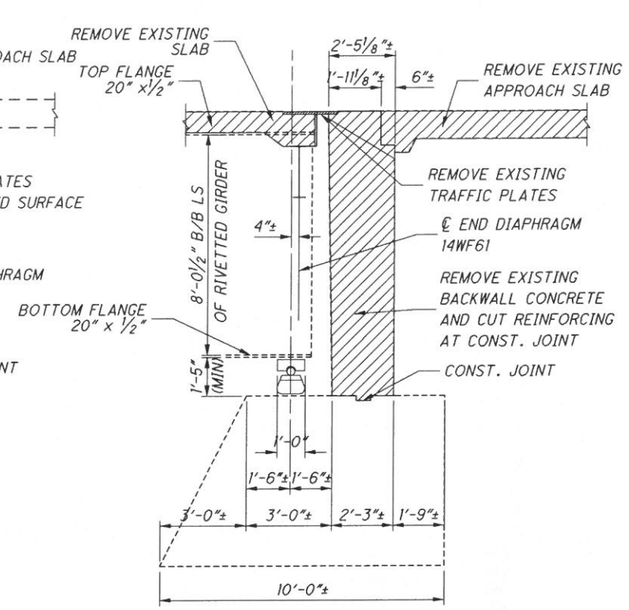

REMOVAL DETAILS EXISTING ABUTMENTS

LEGEND: --- REMOVAL

NOTE:
EXISTING BEARING ANCHOR BOLTS TO BE LEFT IN PLACE AND REUSED WITH NEW BEARING. FOR ADDITIONAL DETAILS, SEE GENERAL NOTES SHEET 4/34

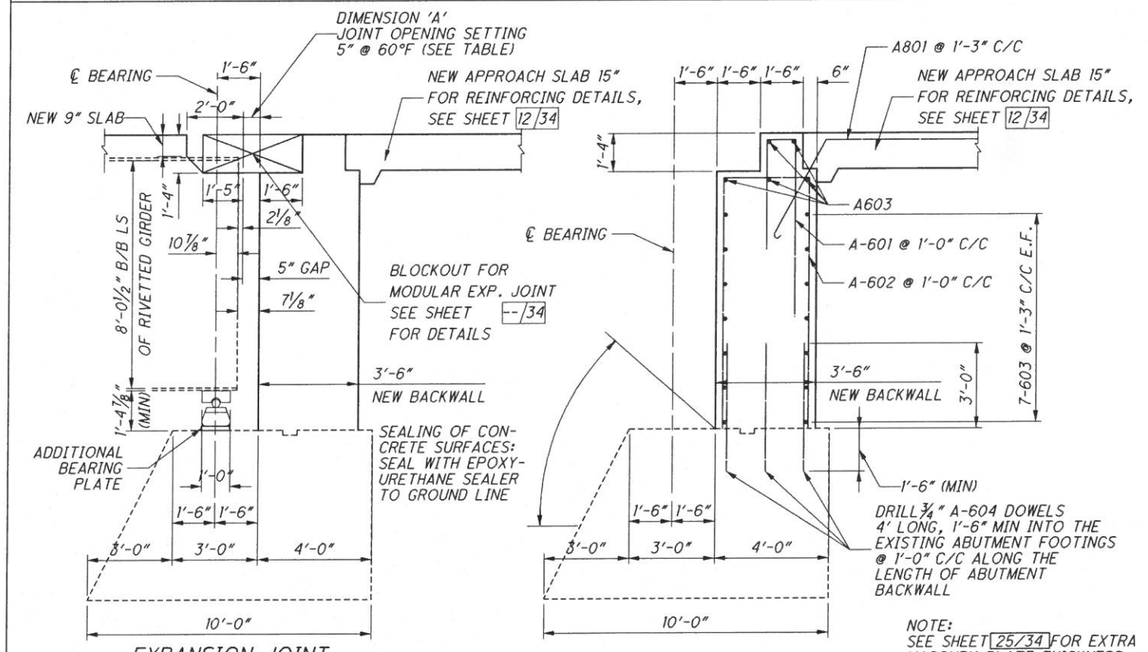

EXPANSION JOINT MODIFIED EXISTING ABUTMENT

FORWARD ABUTMENT SHOWN (NO PILES)
(REAR ABUTMENT SIMILAR W/ PILES)

SEC. A-A

FORWARD ABUTMENT SHOWN (NO PILES)
(REAR ABUTMENT SIMILAR W/ PILES)

NOTE:
SEE SHEET 25/34 FOR EXTRA MASONRY PLATE THICKNESS, BEARING DETAILS AND RESTRAINING ANGLE DETAILS

DESIGN AGENCY
KORDA
KORDA/RINEHART ENGINEERING
WEB www.korda.com
FAX (614) 487-9880
COLUMBUS, OHIO 43215

DESIGNED	DRAWN	REVIEWED	DATE
JKS	JM	RWE	7/27/06
CHECKED	REVISED	STRUCTURE FILE NUMBER	
CAB		7600488L/7600518R	

ABUTMENT BACKWALL REMOVAL AND REPLACEMENT DETAILS
BRIDGE NO.: STA-21-1248 L & R
OVER TUSCARAWAS RIVER, R.J. CORMAN R.R. AND T.R.353

STA-21-12.48
PID No. 25433

12 / 34

92
115

7/28/2006 11:22:49 AM
\Projects\2006\2006-0007 STA-21-12.48 Part 2\Structural-Bridge\Drawings\02_021_1248LAB004.dgn
02_021_1248LAB004.dgn

LEGEND:

REMOVAL

PIER ELEVATION

SECTION

EXISTING PIER CAP REMOVAL DETAILS

PIERS 1 THRU 3, LT. & RT. BRIDGES

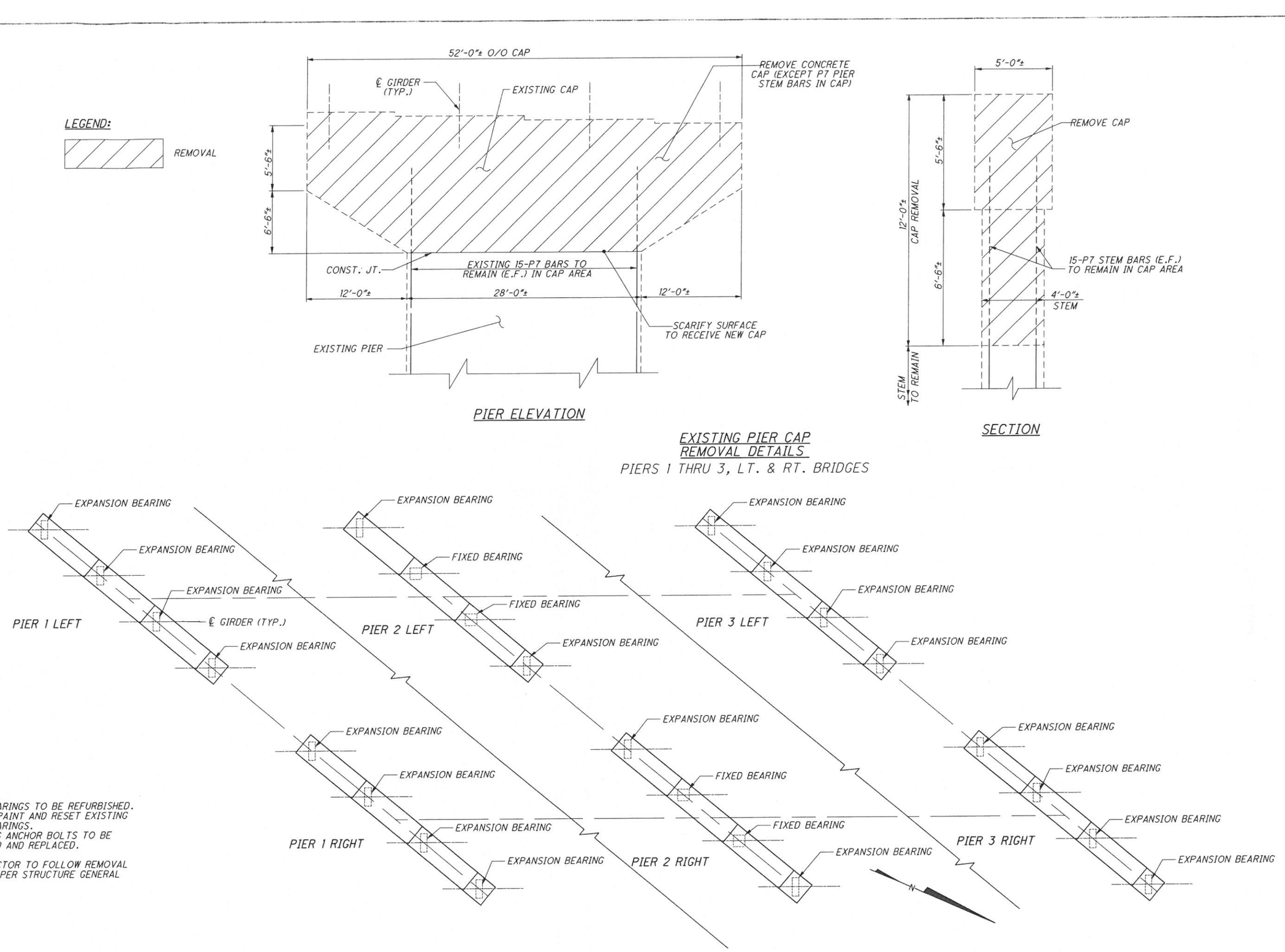

NOTE:

PIER BEARINGS TO BE REFURBISHED. CLEAN, PAINT AND RESET EXISTING PIER BEARINGS.
EXISTING ANCHOR BOLTS TO BE REMOVED AND REPLACED.

CONTRACTOR TO FOLLOW REMOVAL METHOD PER STRUCTURE GENERAL NOTE.

PIER BEARING SCHEMATIC

DESIGN AGENCY
KORDA
KORDA/RICHARD ENGINEERING
MAILING ADDRESS: P.O. BOX 1825, COLUMBUS, OHIO 43216-1825
WEB: www.korda.com
OFFICE: (614) 487-1600
FAX: (614) 487-1699

DESIGNED	DRAWN	REVIEWED	DATE
CAB	CAB	RWE	7/27/06
CHECKED	REVISED	STRUCTURE FILE NUMBER	
JKS		7600488L/7600518R	

PIER REMOVAL DETAILS (PIERS 1 THRU 3)
BRIDGE NO.: STA-21-1248 L & R
OVER TUSCARAWAS RIVER, R.J. CORMAN R.R. AND T.R.353

STA-21-12.48
PID No. 25433

13 / 34

93 / 115

7/28/2006 11:22:49 AM
...\Projects\2006\2006-0007 STA-21-12.48 Part 2\Structural-Bridge\Drawings\013_02L1248LPI001.dgn
013_02L1248LPI001.dgn

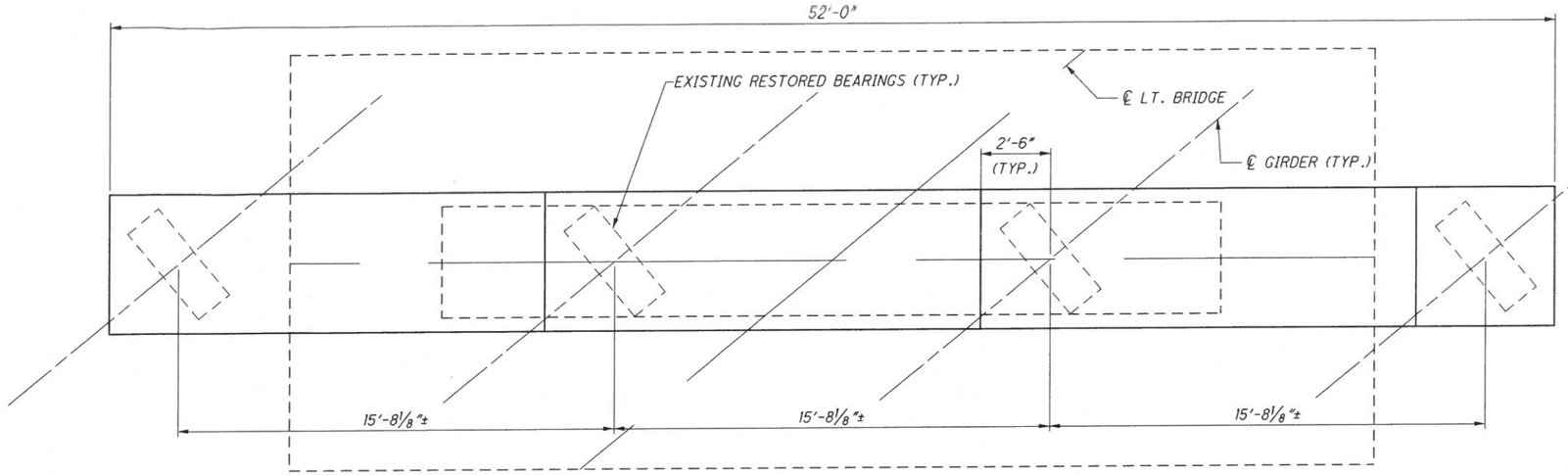

PLAN
LT. BRIDGE SHOWN (RT. BRIDGE SIMILAR)

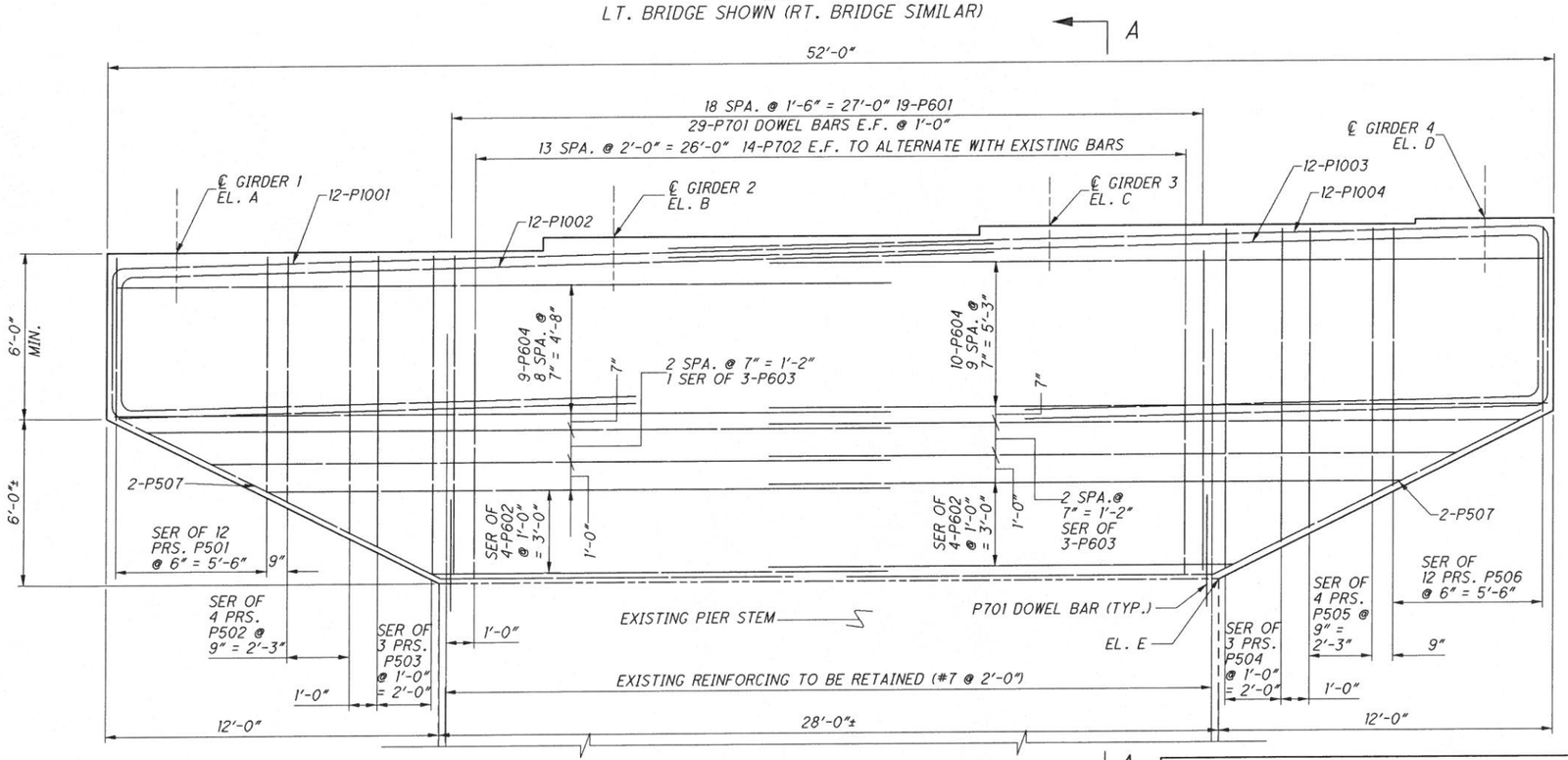

ELEVATION
LT. BRIDGE SHOWN (RT. BRIDGE SIMILAR)

NOTE:
BRIDGE SEAT REINFORCING, SETTING ANCHORS: ACCURATELY PLACE REINFORCING STEEL IN THE VICINITY OF THE BRIDGE SEAT TO AVOID INTERFERENCE WITH THE DRILLING OF BEARING ANCHOR HOLES OR THE PRE-SETTING OF BEARING ANCHORS.

MINIMUM LAP
#6 - 4'-4"
#10 - 11'-7"

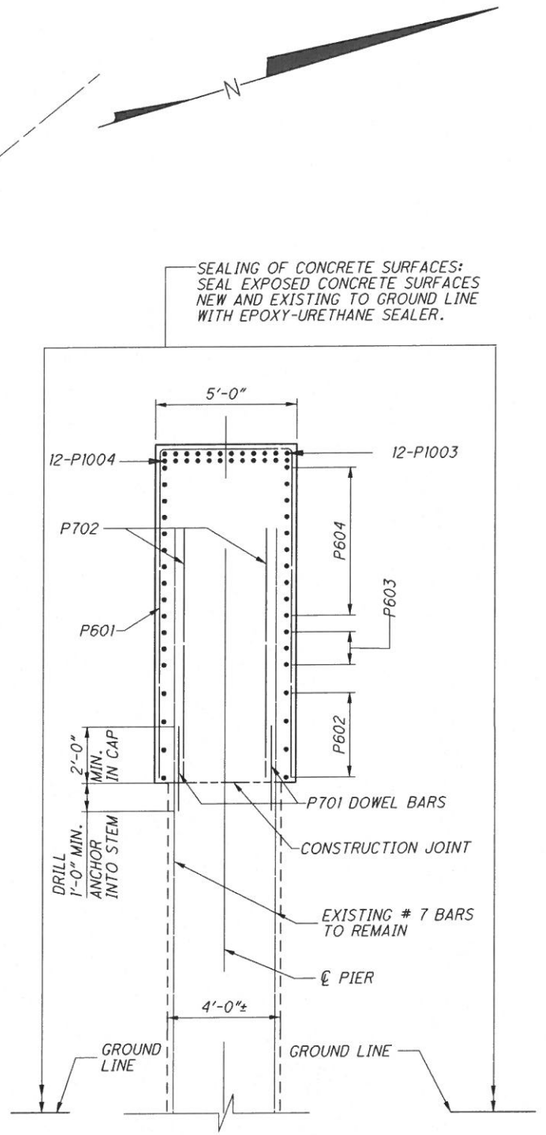

SECTION A-A

PIER ELEVATION TABLE

BRIDGE	PIER #	ELEVATION "A"	ELEVATION "B"	ELEVATION "C"	ELEVATION "D"	ELEVATION "E"
LEFT BR.	PIER 1	947.74	948.22	948.54	948.70	935.70±
SOUTH	PIER 2	952.93	953.41	953.73	953.89	941.04±
BOUND	PIER 3	958.12	958.60	958.92	959.08	946.26±
RIGHT BR.	PIER 1	949.28	949.76	950.09	950.25	937.04±
NORTH	PIER 2	954.47	954.95	955.27	955.43	942.55±
BOUND	PIER 3	959.66	960.14	960.46	960.62	947.85±

DESIGN AGENCY
KORDA
KORDA/RICHARD ENGINEERING
6640 BUSCH BLVD., SUITE 225 — TEL (614) 487-9999
COLUMBUS, OHIO 43229-3641 — FAX (614) 487-9998
WEB www.korda.com

DESIGNED	DRAWN	REVIEWED	DATE
CAB	CAB	RWE	7/27/06
CHECKED	REVISED	STRUCTURE FILE NUMBER	
JKS		7600488L/7600518R	

PIER CAP DETAILS (PIERS 1, 2 & 3)
BRIDGE NO.: STA-21-1248 L & R
OVER TUSCARAWAS RIVER, R.J. CORMAN R.R. AND T.R.353

STA-21-12.48
PID No. 25433

14 / 34

94
115

7/28/2006 11:22:46 AM
...\Projects\2006\2006-0007 STA-21-12.48 Part 2\Structural-Bridge\Drawings\04_021_1248LPI002.dgn
04_021_1248LPI002.dgn

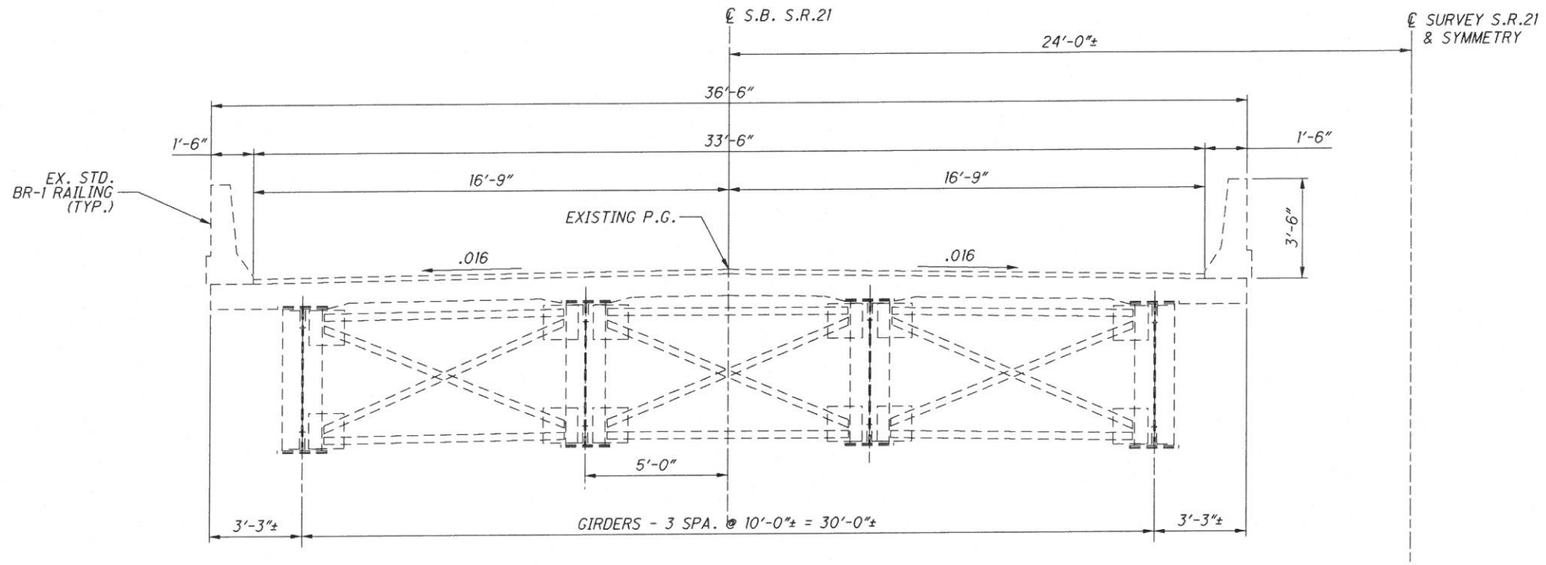

EXISTING TYPICAL SECTION
(LT. SHOWN, RT. SIMILAR)

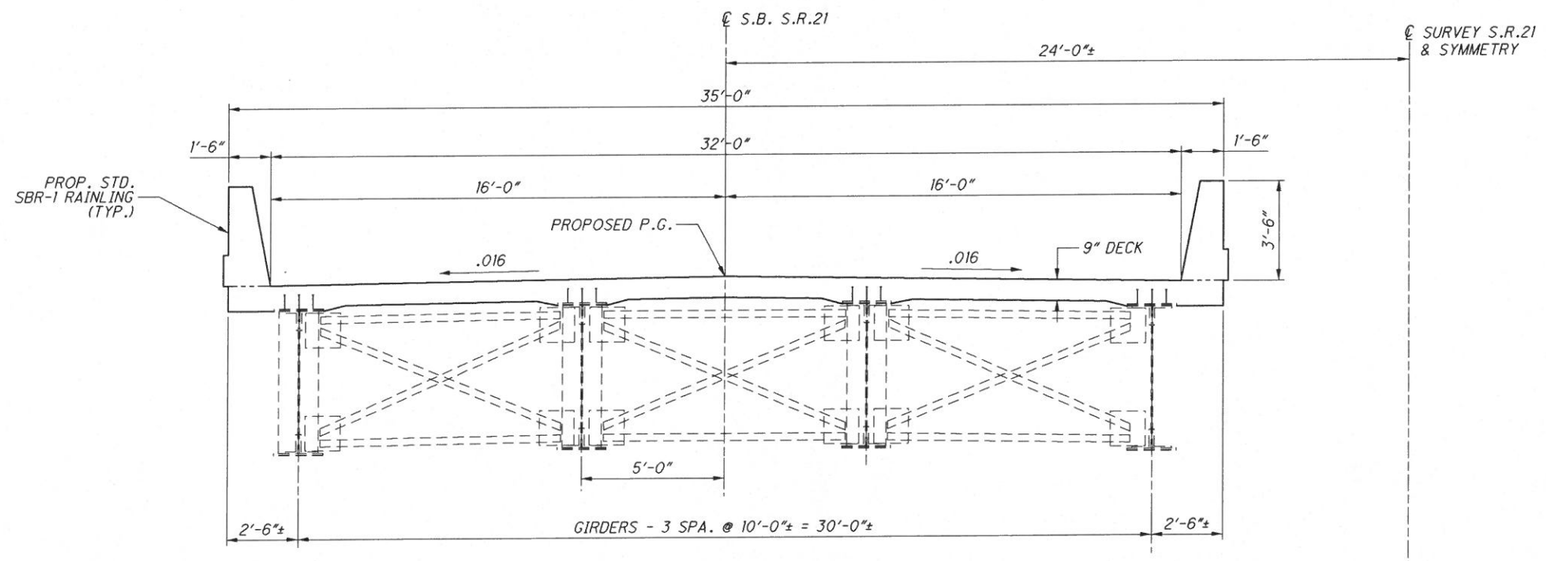

PROPOSED TYPICAL SECTION
(LT. SHOWN, RT. SIMILAR)

DESIGN AGENCY
KORDA
KORDA/NEMETH ENGINEERING
1650 WATERMARK DRIVE, SUITE 200
COLUMBUS, OHIO 43215-1094
WEB: www.korda.com
TEL (614) 487-1650
FAX (614) 487-8881

DESIGNED	DRAWN	REVIEWED	DATE
JKS	JM	RWE	7/27/06
CHECKED	REVISED	STRUCTURE FILE NUMBER	
JKS		7600488L/7600518R	

TYPICAL SECTIONS
BRIDGE NO.: STA-21-1248 L & R
OVER TUSCARAWAS RIVER, R.J. CORMAN R.R. AND T.R.353

STA-21-12.48
PID No. 25433

\Projects\2006\2006-0007 STA-21-12.48 Part 2\Structural-Bridge\Drawings\015_021_1248LTS001.dgn 7/28/2006 11:22:46 AM
5_021_1248LTS001.dgn

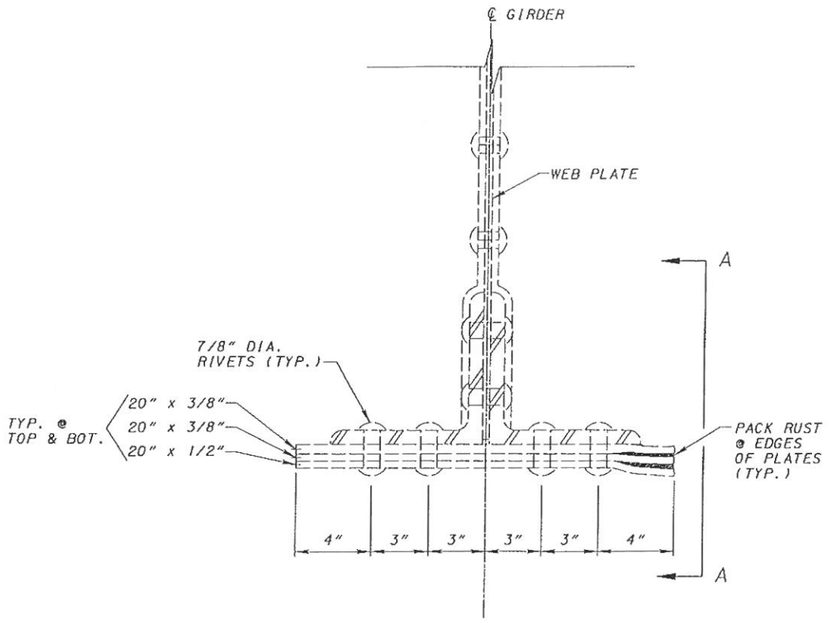

SECTION ①
TYP. AT PIERS

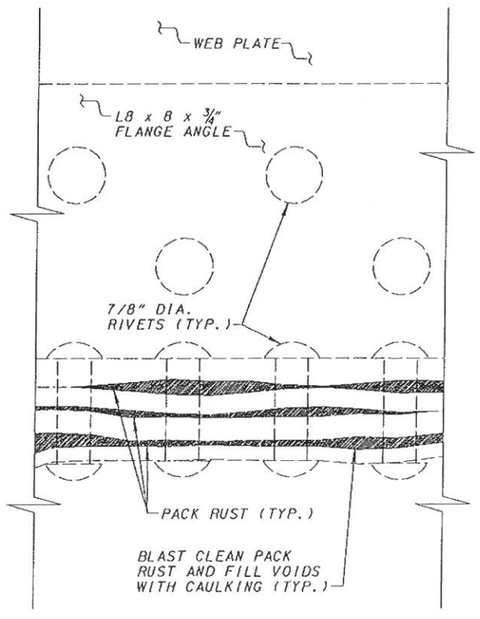

DETAIL A-A

ITEM SPECIAL - STRUCTURE MISC.: PACK RUST REPAIR AND CAULKING

DESCRIPTION:
THIS ITEM SHALL INCLUDE THE REPAIR OF PACK-RUSTED AREAS AND THE CAULKING OF JOINTS BETWEEN ADJACENT STEEL PIECES OF BUILT-UP MEMBERS AND JOINTS AS SHOWN IN THE PLANS AND DIRECTED BY THE ENGINEER. PACK-RUSTED AREAS ARE DEFINED AS THOSE LOCATIONS WHERE ADJACENT STEEL PLATES ARE RUSTED APART MORE THAN 1/8".

THE ACTUAL AMOUNT OF REPAIRING OF PACK-RUSTED AREAS AND CAULKING OF JOINTS BETWEEN ADJACENT STEEL PIECES OF BUILT-UP MEMBERS AND JOINTS SHALL BE DETERMINED IN FIELD IN THE PRESENCE OF AN ENGINEER.

PACK RUST REMOVAL, ABRASIVE BLASTING OF THE MEMBERS, ANY STRUCTURAL STEEL WORK INCLUDING REPLACEMENT OF ANY WARPED PLATES OR RIVETS AND APPLICATION OF THE PRIME AND INTERMEDIATE COATS ACCORDING TO THE OZEU SPECIFICATION SHALL BE COMPLETED BEFORE CAULKING OF THE JOINT IS PERFORMED. CAULKING SHALL BE PER CMS ITEM 514.19.

ONCE THE PACK RUST IS REMOVED, THE CONTRACTOR SHALL CHECK RIVETS IN THE AFFECTED AREA TO DETERMINE IF THEY ARE LOOSE OR EXHIBIT SECTION LOSS, AND NOTIFY THE ENGINEER OF ANY DETERIORATION OBSERVED. THE ENGINEER WILL CHECK THOSE RIVETS AND MAY REQUEST REPLACEMENT OF RIVETS WHICH ARE LOOSE OR HAVE EXCESSIVE SECTION LOSS UNDER ITEM 513 - STRUCTURAL STEEL, MISC.: REPLACE EXISTING RIVETS WITH HIGH STRENGTH BOLTS.

SURFACE PREPARATION:
PORTIONS OF JOINTS THAT HAVE PACK-RUST SHALL RECEIVE PREPARATION IN ADDITION TO THE ABRASIVE BLAST REQUIRED BY THE OZEU SPECIFICATION. PACK RUST SHALL BE REMOVED FROM JOINTS RUSTED APART MORE THAN 1/4" BY CHIPPING, HEATING, HAMMERING, PUNCHING, CHISELING OR BY OTHER SUITABLE MEANS TO A DEPTH AT LEAST EQUAL TO THE WIDTH OF THE GAP PRIOR TO ANY ABRASIVE BLASTING. ALL AREAS RECEIVING PACK RUST REPAIR SHALL BE CLEANED BY ABRASIVE BLASTING TO THE NEAR-WHITE SURFACE PREPARATION GRADE (SA 2 1/2, SSPC-SP10), MAKING SURE THAT THE AREAS WITH GAPS FROM 1/8" TO 1/4" ARE CLEANED TO A DEPTH AT LEAST EQUAL TO THE GAP WIDTH. ALL JOINTS SHALL THEN BE VACUUMED WITH A COMMERCIAL VACUUM CLEANER HAVING A NOZZLE OPENING OF 1" TO 1½" OR AIR BLOWN SUCH THAT ALL DUST AND DEBRIS ARE REMOVED TO THE SATISFACTION OF THE ENGINEER. THE PRIME COAT AND INTERMEDIATE COAT SHALL BE APPLIED TO THE MEMBER ACCORDING TO THE OZEU SPECIFICATION AND THE INTERMEDIATE COAT SHALL BE FULLY CURED AND FREE OF SOLVENT WHEN THE CAULKING IS APPLIED.

MATERIALS:
THE CAULKING MATERIAL SHALL BE A TWO-COMPONENT, 100% SOLIDS, NON-SAG, NON-SHRINK, EPOXY BASED SYSTEM, CAPABLE OF FILLING THE GAPS CREATED BY THE PACK RUST REMOVAL. THE CAULKING MATERIAL SHALL HAVE A GEL OR PASTE CONSISTENCY, HAVE AN EXCELLENT ADHESION TO THE INTERMEDIATE COAT, AND BE SUITABLE FOR APPLICATION TO VERTICAL AND OVERHEAD AREAS. THE EPOXY SYSTEM SHALL BE TESTED PRIOR TO USE.

WHEN MANUFACTURED, THE FORMULATIONS SHALL CONTAIN NO UN-REACTIVE DILUENTS, SOLVENTS, OR OTHER FILLERS. THE CAULKING MATERIAL SHALL CONFORM TO THE FOLLOWING PERFORMANCE REQUIREMENTS.

A TENSILE PROPERTIES (ASTM D-638)
1. TENSILE ULTIMATE STRENGTH (14 DAY) ..... 4000 PSI (MIN)
2. TENSILE ELONGATION AT BREAK ..... 1.3% - 2.5%
3. TENSILE MODULUS OF ELASTICITY ..... 250000 PSI (MIN)

B BOND STRENGTH (ASTM C-882)
1. 2 DAY DRY CURE CAULKING TO STEEL ..... 2600 PSI (MIN)

C HEAT DEFLECTION TEMPERATURE (ASTM D-648)
1. 7 DAY, FIBER STRESS LOADING - 264 PSI ... 120 DEGREES F

D WATER ABSORPTION (ASTM D-570)
1. 7 DAY, 24 HOUR IMMERSION .....0.6% (MAX)

E FLEXURAL PROPERTIES (ASTM D-790)
1. FLEXURAL STRENGTH (14 DAY) ..... 6500 PSI (MIN)
2. TANGENT MODULUS OF ELASTICITY IN BENDING .. 700000 PSI

THE CAULKING MATERIAL PROPOSED FOR USE SHALL BE PREQUALIFIED. PRIOR TO APPROVAL, COPIES OF THE MANUFACTURER'S CERTIFIED TEST DATA SHOWING THAT THE EPOXY SYSTEM COMPLIES WITH THE PERFORMANCE REQUIREMENTS OF THIS SPECIFICATION SHALL BE SUBMITTED TO THE ENGINEER OF TESTS, OFFICE OF MATERIALS MANAGEMENT 1600 W. BROAD ST. COLUMBUS, OHIO 43223. THE CERTIFIED TEST DATA SHALL ALSO STATE THE FOLLOWING PHYSICAL PROPERTIES FOR COMPONENT A, COMPONENT B, AND THE MIXTURE:

1. COLOR
2. PERCENT SOLIDS
3. SHELF LIFE
4. VISCOSITY (CPS)
5. MIXING RATIO
6. POT LIFE
7. GEL TIME
8. CONSISTENCY

THE TEST DATA SHALL BE DEVELOPED BY AN INDEPENDENT TESTING LABORATORY APPROVED BY THE DIRECTOR AND SHALL INCLUDE THE BRAND NAME OF MANUFACTURER, NUMBER OF LOTS TESTED, AND DATE OF MANUFACTURE.

THE FOLLOWING ITEMS SHALL ALSO BE SUBMITTED TO THE DIRECTOR PRIOR TO APPROVAL:

1. MANUFACTURER'S TECHNICAL DATA SHEET FOR EACH COMPONENT.
2. MATERIAL SAFETY DATA SHEET FOR EACH COMPONENT.
3. ENOUGH COMPONENTS TO PRODUCE A QUART SAMPLE OF CAULKING.
4. A ONE QUART SAMPLE OF THE SOLVENT TO BE USED FOR CLEANUP.

WHEN CAULKING MATERIAL HAS BEEN APPROVED BY THE ENGINEER, FURTHER PERFORMANCE TESTING BY THE MANUFACTURER WILL NOT BE REQUIRED UNLESS THE FORMULATION OR MANUFACTURING PROCESS HAS BEEN CHANGED IN WHICH CASE NEW CERTIFIED TEST RESULTS WILL BE REQUIRED. ACCEPTANCE VARIANCES SHALL BE ESTABLISHED BY THE ENGINEER.

THE CONTRACTOR SHALL FURNISH THE ENGINEER A COPY OF THE MANUFACTURER'S COMPREHENSIVE JOB SPECIFIC PREPARATION, MIXING AND APPLICATION INSTRUCTIONS. ANY SIGNIFICANT CHANGES TO THESE INSTRUCTIONS WHICH ARE RECOMMENDED BY THE REPRESENTATIVE FOR AN UNANTICIPATED SITUATION SHALL BE APPROVED BY THE ENGINEER PRIOR TO THE ADOPTION OF SUCH CHANGES.

APPLICATION:
THE CAULKING SHALL BE APPLIED EVENLY TO THE JOINTS AND GAPS AS DEPICTED IN TYPICAL PLAN DETAILS. VOIDS SHALL BE COMPLETELY FILLED WITH CAULKING GUN AND SHALL BE SPREAD SMOOTHLY USING HEAVY PRESSURE TO DISPLACE AIR BUBBLES. EXCESS MATERIAL SHALL BE REMOVED IMMEDIATELY. ALL PROCEDURES SHALL CONFORM TO THE REQUIREMENTS OF THE CAULKING MANUFACTURER WHO SHALL PROVIDE A TECHNICAL REPRESENTATIVE AT THE SITE AS DIRECTED BY THE PROJECT ENGINEER.

PAYMENT:
PAYMENT FOR ACCEPTED QUANTITIES, COMPLETE IN PLACE, SHALL BE MADE AT THE CONTRACT PRICE BID PER LINEAR FOOT FOR ITEM SPECIAL - STRUCTURE, MISC.: PACK RUST REPAIR AND CAULKING. THIS SHALL INCLUDE ALL NECESSARY TOOLS, LABOR, EQUIPMENT AND MATERIALS NECESSARY TO COMPLETE THIS ITEM OF WORK AS DESCRIBED AND TO THE SATISFACTION OF THE ENGINEER.

DESIGN AGENCY
GPD ASSOCIATES

DESIGNED	DRAWN	REVIEWED	DATE
RHC	RHC	GGN	07-21-06
CHECKED	REVISED	STRUCTURE FILE NUMBER	
DJC		7600488L/7600518R	

GIRDER REPAIR DETAILS
BRIDGE NO. STA-21-1248L&R
S.R. 21 OVER TUSCAWARAS RIVER, RJ CORMAN RR & TOWNSHIP ROAD 353

STA-21-12.48
PID 25433

\\akron\Data\civil\2004054\00\dgn\struct\details\stad02r-epair.dgn
7/19/2006
3:48:24 PM

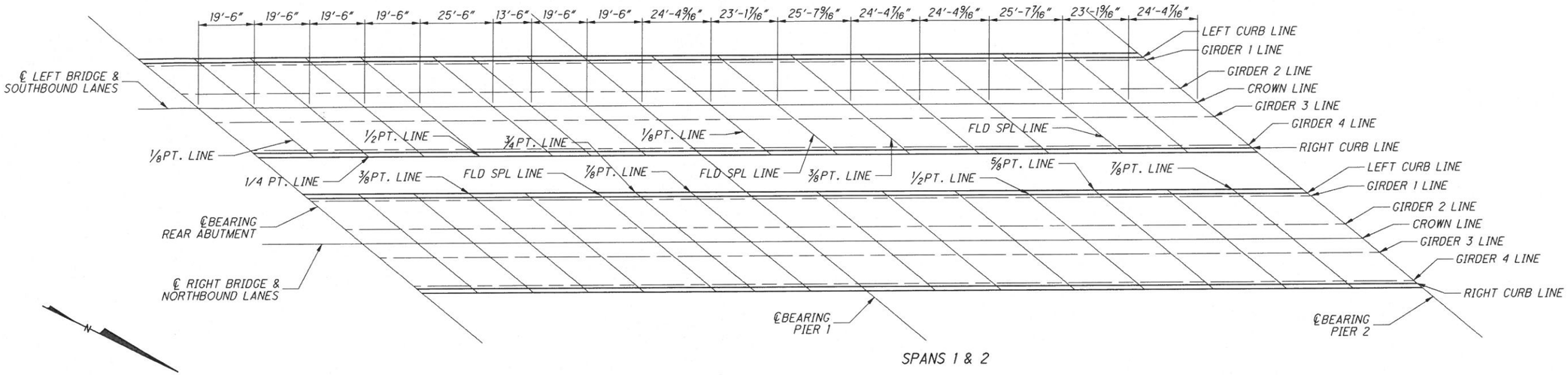

SPANS 1 & 2

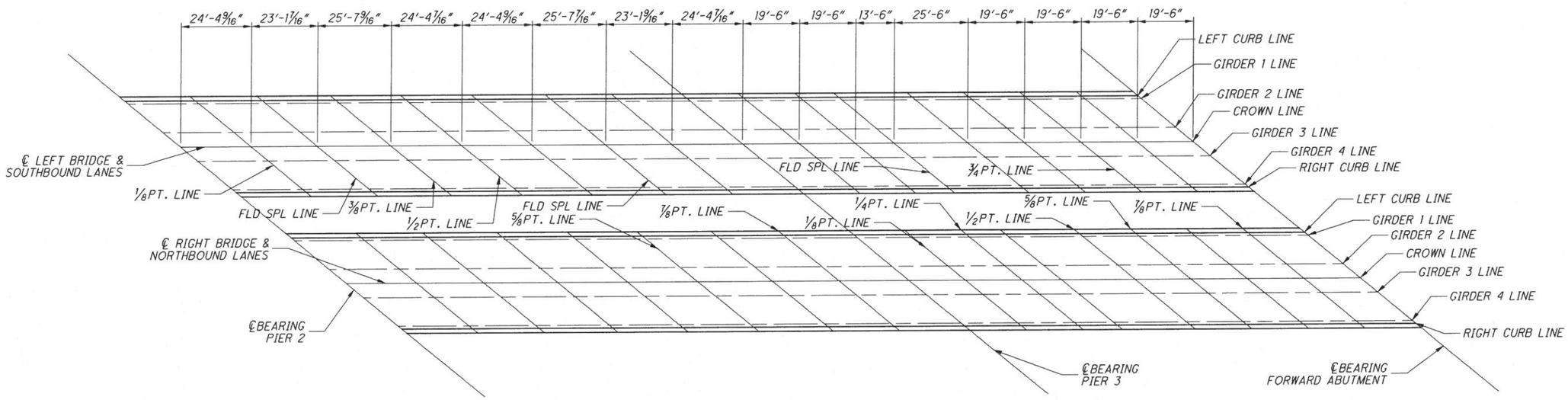

SPANS 3 & 4

SCREED LAYOUT PLAN

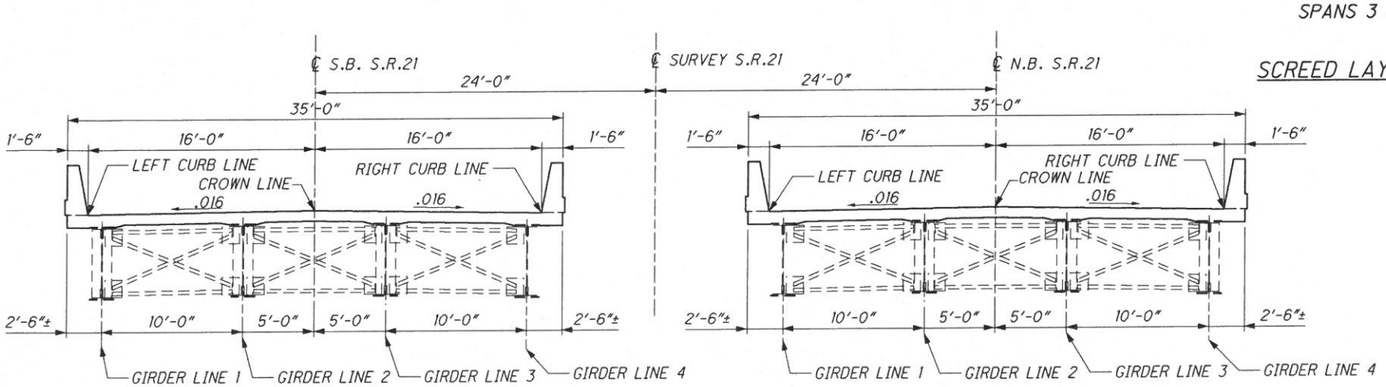

LEFT BRIDGE SECTION

RIGHT BRIDGE SECTION

DESIGN AGENCY
KORDA
KORDA/NENETH ENGINEERING
1650 WATERMARK DRIVE, SUITE 200
COLUMBUS, OHIO 43215-1094
WEB www.korda.com
TEL (614) 487-1660
FAX (614) 487-8881

DESIGNED	DRAWN	REVIEWED	DATE
CAB	CAB	RWE	7/27/06
CHECKED	REVISED	STRUCTURE FILE NUMBER	
JKS		7600488L/7600518R	

SCREED LAYOUT PLAN
BRIDGE NO.: STA-21-1248 L & R
OVER TUSCARAWAS RIVER, R.J. CORMAN R.R. AND T.R. 353

STA-21-12.48
PID No. 25433

\Projects\2006\2006-0007 STA-21-12.48 Part 2\Structural-Bridge\Drawings\021_021_1248LSD004.dgn 7/28/2006 11:22:44 AM
21_021_1248LSD004.dgn

INTERIOR GIRDERS 2 & 3 DEFLECTION (INCHES)

	SPAN 1								SPAN 2								
LOCATION	RA BRG	1/8PT.	1/4PT.	3/8PT.	1/2PT.	FLD SPL	3/4PT.	7/8PT.	P 1 BRG	1/8PT.	FLD SPL	3/8PT.	1/2PT.	5/8PT.	FLD SPL	7/8PT.	P 2 BRG
DEFLECTION DUE TO WEIGHT OF DECK SLAB	0	3/8	3/4	7/8	3/4	1/2	3/8	1/8	0	1/8	1/4	5/8	3/4	5/8	3/8	1/8	0
DEFLECTION DUE TO REMAINING DEAD LOAD	0	1/8	1/8	1/8	1/8	1/8	1/8	0	0	0	1/8	1/8	1/8	1/8	1/8	0	0
ANTICIPATED CALCULATED DEAD LOAD DEFLECTION	0	1/2	7/8	1	7/8	5/8	1/2	1/8	0	1/8	3/8	3/4	1/8	3/4	1/2	1/8	0

EXTERIOR GIRDERS 1 & 4 DEFLECTION (INCHES)

	SPAN 1								SPAN 2								
LOCATION	RA BRG	1/8PT.	1/4PT.	3/8PT.	1/2PT.	FLD SPL	3/4PT.	7/8PT.	P 1 BRG	1/8PT.	FLD SPL	3/8PT.	1/2PT.	5/8PT.	FLD SPL	7/8PT.	P 2 BRG
DEFLECTION DUE TO WEIGHT OF DECK SLAB	0	3/8	5/8	5/8	5/8	3/8	1/4	1/8	0	1/8	1/4	1/2	5/8	1/2	1/4	1/8	0
DEFLECTION DUE TO REMAINING DEAD LOAD	0	1/8	1/8	1/8	1/8	1/8	1/8	0	0	0	1/8	1/8	1/8	1/8	1/8	0	0
ANTICIPATED CALCULATED DEAD LOAD DEFLECTION	0	1/2	3/4	3/4	3/4	1/2	3/8	1/8	0	1/8	3/8	5/8	3/4	5/8	3/8	1/8	0

NOTE:

1. DEFLECTIONS ARE SYMMETRICAL ABOUT ℄ PIER 2 BRG.
2. SCREED ELEVATIONS SHOWN ARE FOR THE DECK SLAB SURFACE PRIOR TO CONCRETE PLACEMENT. ALLOWANCE HAS BEEN MADE FOR ANTICIPATED CALCULATED DEAD LOAD DEFLECTIONS.

LEFT BRIDGE
DECK SCREED ELEVATIONS

	SPAN 1								SPAN 2								
LOCATION	RA BRG	1/8PT.	1/4PT.	3/8PT.	1/2PT.	FLD SPL	3/4PT.	7/8PT.	P 1 BRG	1/8PT.	FLD SPL	3/8PT.	1/2PT.	5/8PT.	FLD SPL	7/8PT.	P 2 BRG
LEFT CURB LINE	958.78	959.34	959.88	960.40	960.92	961.58	961.93	962.42	962.93	963.59	964.23	964.93	965.59	966.23	966.89	967.48	968.12
GIRDER 1 LINE	958.83	959.39	959.93	960.45	960.97	961.63	961.97	962.47	962.98	963.64	964.27	964.98	965.64	966.27	966.93	967.53	968.17
GIRDER 2 LINE	959.31	959.87	960.42	960.95	961.46	962.12	962.47	962.95	963.46	964.12	964.76	965.47	966.13	966.77	967.43	968.01	968.65
CROWN LINE	959.55	960.11	960.66	961.19	961.70	962.36	962.71	963.19	963.70	964.36	965.00	965.71	966.37	967.01	967.67	968.25	968.89
GIRDER 3 LINE	959.63	960.19	960.74	961.27	961.78	962.44	962.79	963.27	963.78	964.44	965.08	965.79	966.45	967.09	967.75	968.33	968.97
GIRDER 4 LINE	959.79	960.35	960.89	961.41	961.93	962.59	962.94	963.44	963.94	964.60	965.24	965.94	966.60	967.24	967.90	968.49	969.13
RIGHT CURB LINE	959.81	960.37	960.91	961.43	961.95	962.60	962.95	963.45	963.96	964.62	965.25	965.96	966.62	967.25	967.91	968.51	969.15

	SPAN 3								SPAN 4							
LOCATION	P 2 BRG	1/8PT.	FLD SPL	3/8PT.	1/2PT.	5/8PT.	FLD SPL	7/8PT.	P 3 BRG	1/8PT.	1/4PT.	FLD SPL	1/2PT.	5/8PT.	3/4PT.	7/8PT.	FA BRG
LEFT CURB LINE	968.12	968.78	969.41	970.12	970.78	971.41	972.07	972.67	973.31	973.84	974.37	974.74	975.44	975.96	976.48	976.98	977.46
GIRDER 1 LINE	968.17	968.83	969.46	970.16	970.82	971.46	972.12	972.72	973.35	973.88	974.42	974.79	975.49	976.01	976.53	977.03	977.50
GIRDER 2 LINE	968.65	969.31	969.95	970.66	971.31	971.95	972.60	973.20	973.84	974.36	974.91	975.28	975.98	976.51	977.02	977.51	977.98
CROWN LINE	968.89	969.55	970.19	970.90	971.56	972.19	972.84	973.44	974.08	974.61	975.15	975.52	976.22	976.75	977.26	977.75	978.23
GIRDER 3 LINE	968.97	969.63	970.27	970.98	971.64	972.27	972.92	973.52	974.16	974.69	975.24	975.61	976.30	976.83	977.34	977.83	978.31
GIRDER 4 LINE	969.13	969.79	970.43	971.13	971.79	972.42	973.09	973.68	974.32	974.85	975.39	975.76	976.45	976.97	977.49	977.99	978.47
RIGHT CURB LINE	969.15	969.81	970.44	971.14	971.80	972.44	973.10	973.70	974.33	974.86	975.40	975.77	976.47	976.99	977.51	978.01	978.48

RIGHT BRIDGE
DECK SCREED ELEVATIONS

	SPAN 1								SPAN 2								
LOCATION	RA BRG	1/8PT.	1/4PT.	3/8PT.	1/2PT.	FLD SPL	3/4PT.	7/8PT.	P 1 BRG	1/8PT.	FLD SPL	3/8PT.	1/2PT.	5/8PT.	FLD SPL	7/8PT.	P 2 BRG
LEFT CURB LINE	960.32	960.88	961.42	961.94	962.46	963.12	963.47	963.97	964.47	965.13	965.77	966.47	967.13	967.77	968.43	969.02	969.66
GIRDER 1 LINE	960.37	960.93	961.47	961.99	962.51	963.17	963.52	964.01	964.52	965.18	965.82	966.52	967.18	967.82	968.48	969.07	969.71
GIRDER 2 LINE	960.85	961.41	961.96	962.49	963.00	963.66	964.01	964.49	965.00	965.66	966.30	967.01	967.67	968.31	968.97	969.55	970.19
CROWN LINE	961.09	961.65	962.20	962.73	963.24	963.90	964.25	964.74	965.24	965.90	966.54	967.25	967.91	968.55	969.21	969.79	970.43
GIRDER 3 LINE	961.17	961.73	962.28	962.81	963.32	963.98	964.33	964.82	965.32	965.98	966.62	967.33	967.99	968.63	969.29	969.87	970.51
GIRDER 4 LINE	961.34	961.90	962.44	962.95	963.47	964.13	964.48	964.98	965.49	966.14	966.78	967.48	968.14	968.78	969.44	970.03	970.67
RIGHT CURB LINE	961.35	961.91	962.45	962.97	963.49	964.15	964.50	964.99	965.50	966.16	966.80	967.50	968.16	968.80	969.46	970.05	970.69

	SPAN 3								SPAN 4							
LOCATION	P 2 BRG	1/8PT.	FLD SPL	3/8PT.	1/2PT.	5/8PT.	FLD SPL	7/8PT.	P 3 BRG	1/8PT.	1/4PT.	FLD SPL	1/2PT.	5/8PT.	3/4PT.	7/8PT.	FA BRG
LEFT CURB LINE	969.66	970.32	970.96	971.66	972.32	972.95	973.62	974.21	974.85	975.38	975.92	976.29	976.99	977.50	978.02	978.52	979.00
GIRDER 1 LINE	969.71	970.37	971.00	971.71	972.36	973.00	973.66	974.26	974.90	975.43	975.96	976.33	977.03	977.55	978.07	978.57	979.05
GIRDER 2 LINE	970.19	970.85	971.50	972.20	972.86	973.49	974.14	974.74	975.38	975.91	976.46	976.83	977.52	978.05	978.56	979.05	979.53
CROWN LINE	970.43	971.09	971.74	972.44	973.10	973.74	974.39	974.98	975.62	976.15	976.70	977.07	977.77	978.29	978.80	979.29	979.77
GIRDER 3 LINE	970.51	971.17	971.82	972.52	973.18	973.82	974.47	975.06	975.70	976.23	976.78	977.15	977.85	978.38	978.88	979.37	979.85
GIRDER 4 LINE	970.67	971.33	971.97	972.67	973.33	973.97	974.63	975.22	975.86	976.39	976.93	977.30	978.00	978.52	979.03	979.53	980.01
RIGHT CURB LINE	970.69	971.35	971.98	972.69	973.34	973.98	974.64	975.24	975.88	976.40	976.94	977.31	978.01	978.53	979.05	979.55	980.03

DESIGN AGENCY
KORDA/NEMETH ENGINEERING
6960 WATERMARK DRIVE, SUITE 200
COLUMBUS, OHIO 43235
WEB www.korda.com
TEL (614) 431-5900
FAX (614) 431-5991

DESIGNED	DRAWN	REVIEWED	DATE
CAB	CAB	RWE	7/27/06
CHECKED	REVISED	STRUCTURE FILE NUMBER	
JKS		7600488L/7600518R	

SCREED ELEVATIONS
BRIDGE NO.: STA-21-1248 L & R
OVER TUSCARAWAS RIVER, R.J. CORMAN R.R. AND T.R.353

STA-21-12.48
PID No. 25433

22 / 34

103
115

7/28/2006 11:22:41 AM
...Projects\2006\2006-0007 STA-21-12.48 Part 2\Structural-Bridge\Drawings\022_02LI248LSD005.dgn
...2_02LI248LSD005.dgn

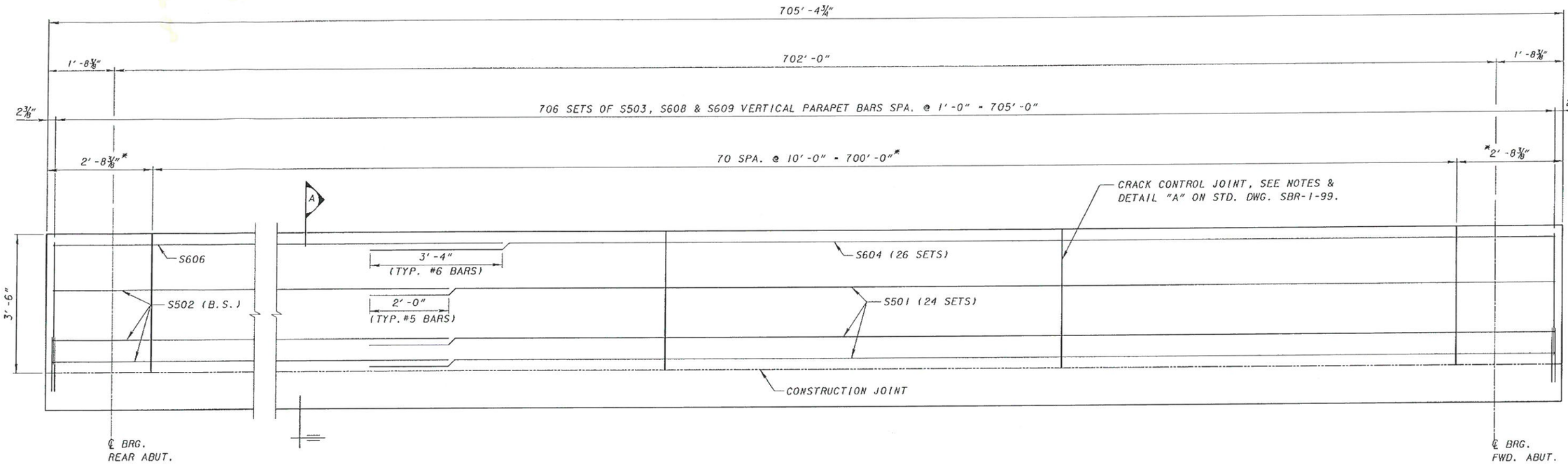

PARAPET ELEVATION

DIMENSIONS MEASURED ALONG TOE OF PARAPET

* PARAPET SAWCUT CRACK CONTROL JOINT SPACING

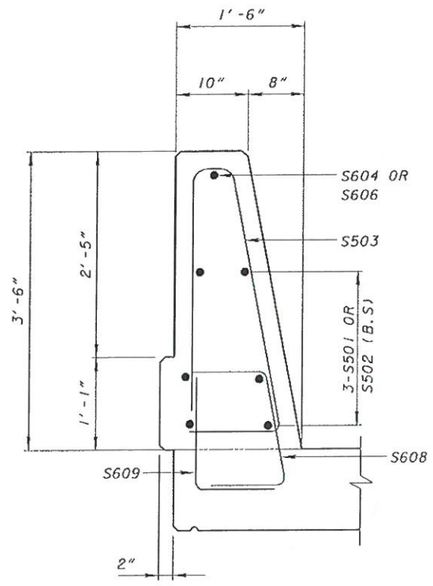

SECTION A

SLAB REINFORCING NOT SHOWN

DESIGN AGENCY
CLAUS PILE SCHUBER BURNS & DEVANEY, INC.
GPD ASSOCIATES
520 South Main Street, Suite 2531 Akron, Ohio 44311
330-572-2100 Fax 330-572-2101

DESIGNED	DRAWN	REVIEWED	DATE
GTP	GTP	GGN	07-21-06
CHECKED	REVISED	STRUCTURE FILE NUMBER	
DJP		7600488L/7600518R	

SUPERSTRUCTURE PARAPET DETAILS

BRIDGE NO. STA-21-1248L&R

S.R. 21 OVER TUSCAWARAS RIVER, RJ CORMAN RR & TOWNSHIP ROAD 353

STA-21-12.48

PID 25433

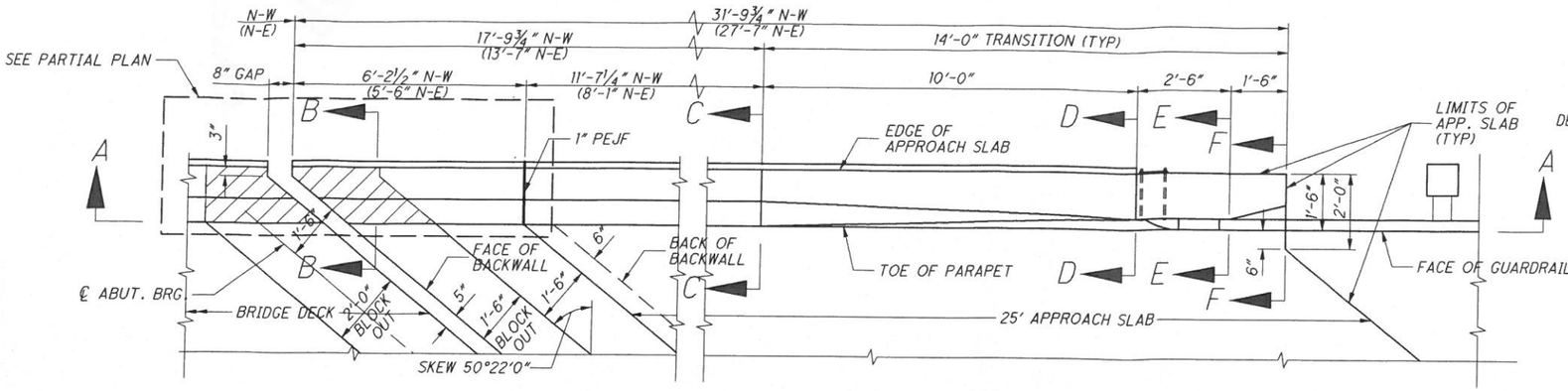

PART PLAN AT ABUTMENT

FWD ABUTMENT N-W PARAPET SHOWN

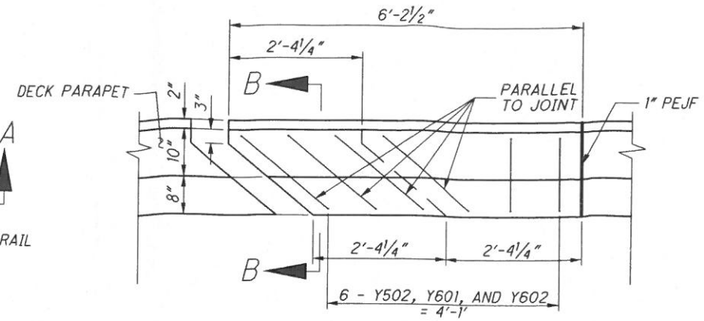

PARTIAL PLAN DETAIL

N-W ABUTMENT SHOWN

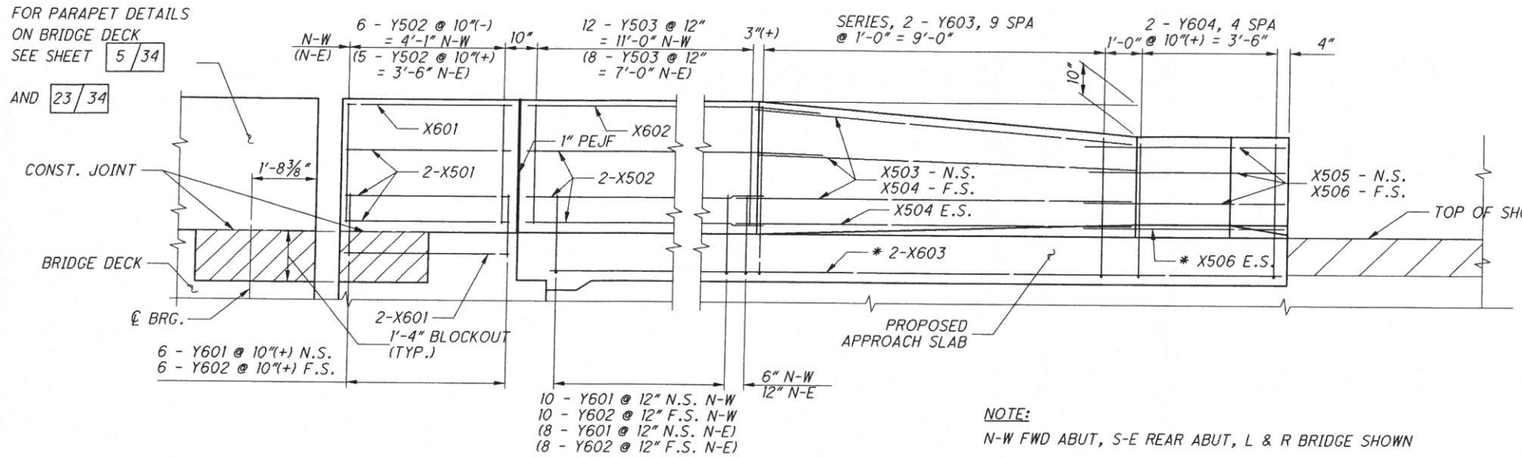

SECTION A-A

NOTE:

N-W FWD ABUT, S-E REAR ABUT, L & R BRIDGE SHOWN

(N-E FWD ABUT, S-W REAR ABUT, L & R BRIDGE SIMILAR)

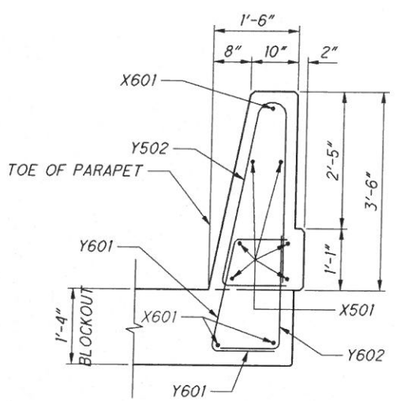

SECTION B-B

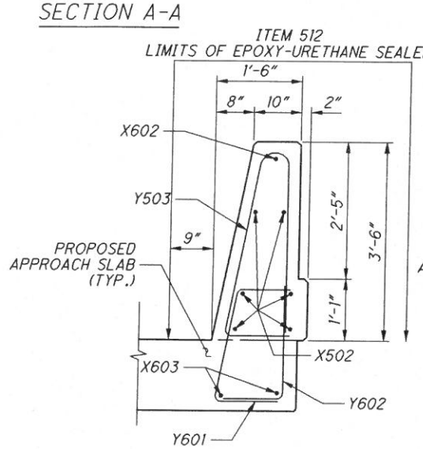

SECTION C-C

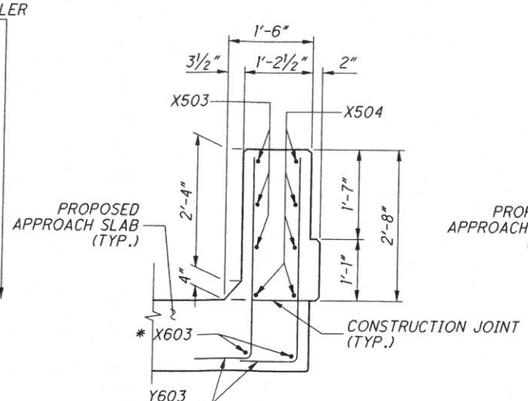

SECTION D-D

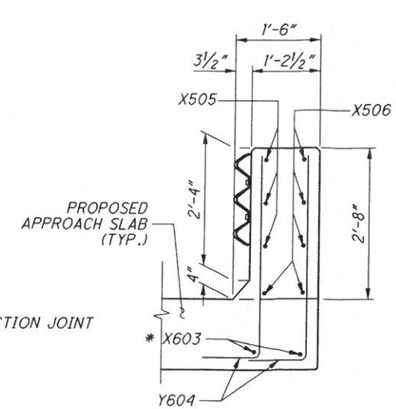

SECTION E-E

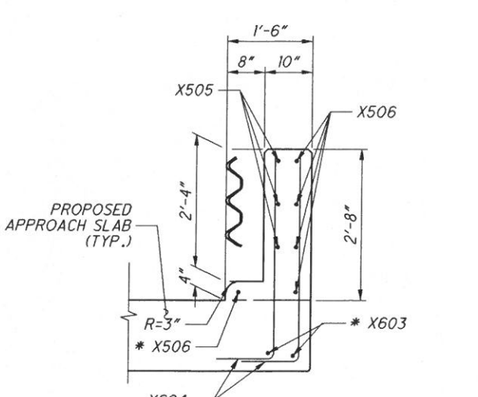

* FIELD BEND IF NECESSARY

SECTION F-F

DESIGN AGENCY
KORDA
KORDA/NEMETH ENGINEERING
1650 WATERMARK DRIVE, SUITE 200
COLUMBUS, OHIO 43215-1094
WEB www.korda.com
TEL (614) 487-1650
FAX (614) 487-8881

DESIGNED	DRAWN	REVIEWED	DATE
JKS	JM	RWE	7/27/06
CHECKED	REVISED	STRUCTURE FILE NUMBER	
CB		7600488L/7600518R	

ABUTMENT AND APPROACH SLAB PARAPET DETAILS

BRIDGE NO.: STA-21-1248 L & R

OVER TUSCARAWAS RIVER RJ CORMAN RAILROAD AND T.R. 353

STA-21-1248

PID No. 25433

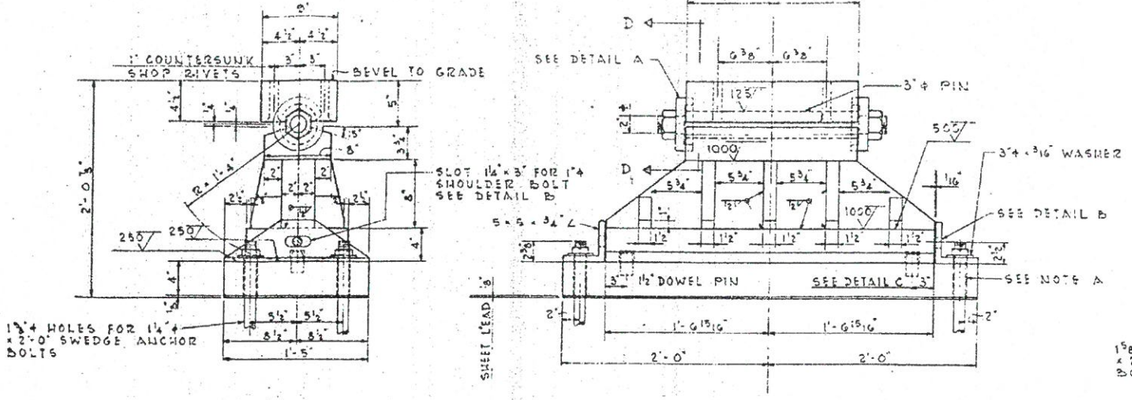

EXPANSION BEARING — PIERS

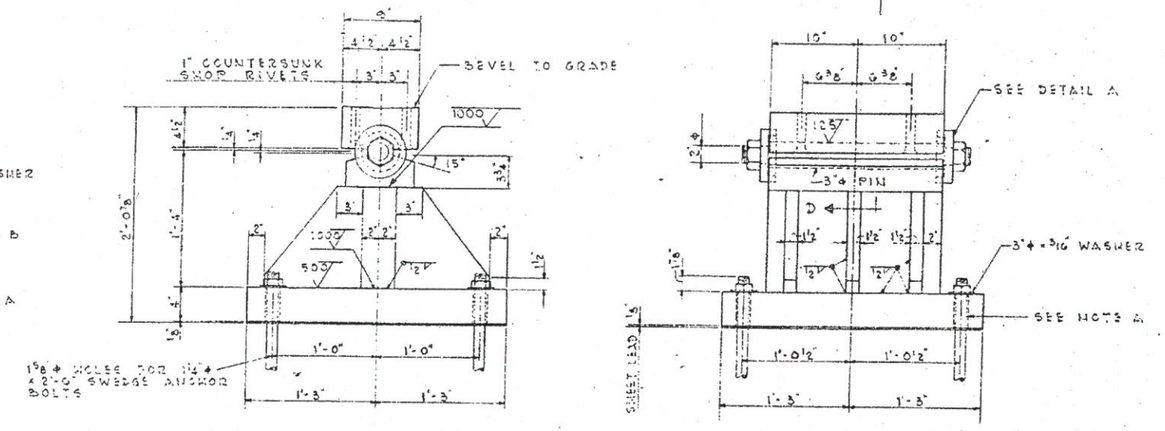

FIXED BEARING — PIERS

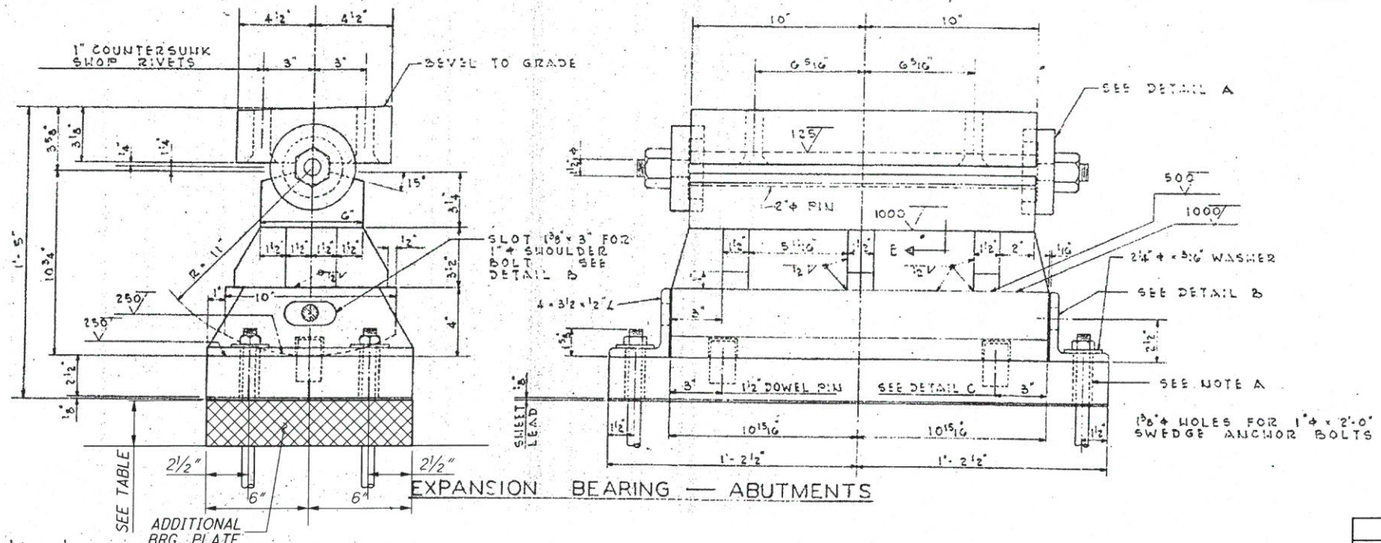

EXPANSION BEARING — ABUTMENTS

NOTE A — FILL ANCHOR BOLT HOLES IN BASE R WITH MASTIC AFTER BEARING IS PROPERLY SET AND ALL ADJUSTMENTS ARE MADE

NOTES:
1. ALL MATERIAL TO BE ASTM AT STEEL
2. BEARING SHOES SHALL BE SET VERTICAL @ 65°F
3. DRILL 2½"ϕ HOLES FOR ANCHOR BOLTS BEFORE SUPERSTRUCTURE IS ERECTED.

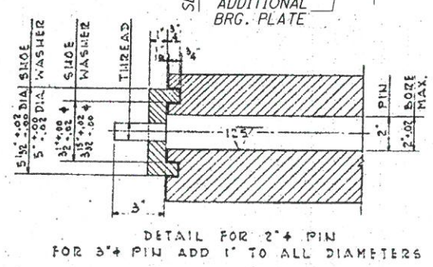

DETAIL FOR 2"ϕ PIN
FOR 3"ϕ PIN ADD 1" TO ALL DIAMETERS

DETAIL A

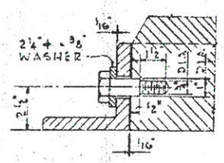

DETAIL B

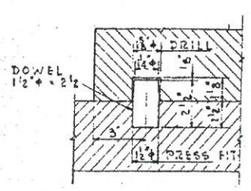

DETAIL C

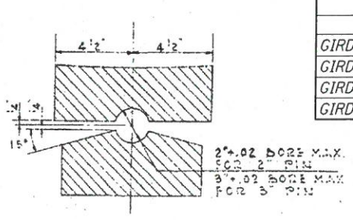

SECTION D-D
(SECTION E-E SIMILAR)

ADDITIONAL ABUTMENT EXPANSION BEARING PLATE THICKNESS

	LEFT BRIDGE		RIGHT BRIDGE	
	REAR ABUTMENT	FORWARD ABUTMENT	REAR ABUTMENT	FORWARD ABUTMENT
GIRDER 1	2¾"	2⅜"	2¼"	1¾"
GIRDER 2	2⅜"	2"	2¼"	3⅛"
GIRDER 3	2"	1¾"	2"	3⅜"
GIRDER 4	1⅛"	2⅛"	1⅝"	2⅛"

DESIGN AGENCY

DESIGNED	REVIEWED	DATE	STRUCTURE FILE NUMBER
DRAWN	REVISED		7600488L/7600518R
CHECKED			

T.R. 353

BEARING INSERT SHEET
BRIDGE NO.: STA-21-1248 L & R
OVER TUSCARAWAS RIVER, R.J. CORMAN R.R. AND T.R.353

STA-21-12.48
PID No. 25433

25/34

105/115

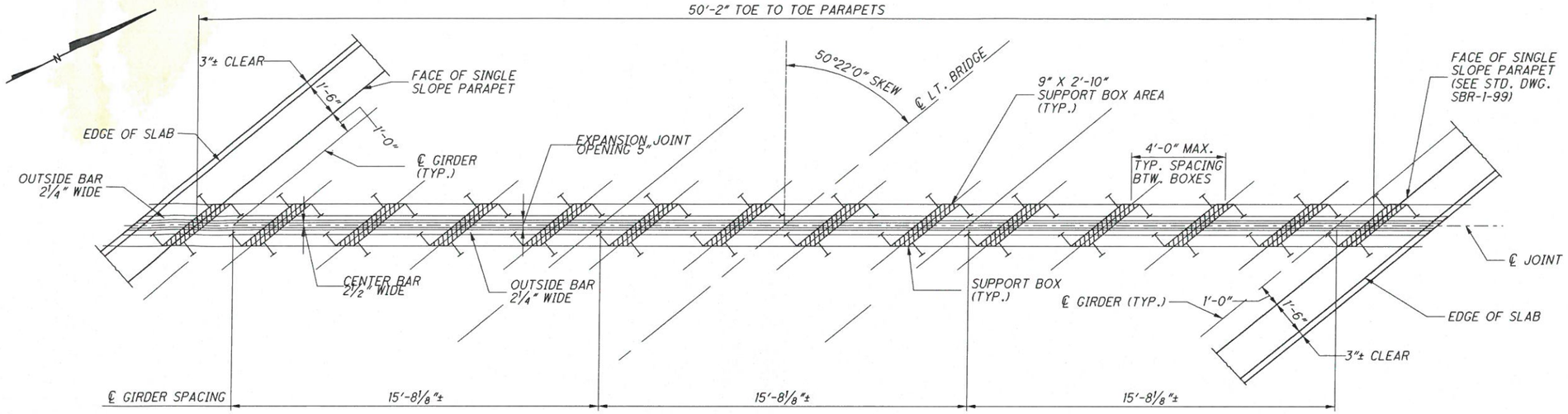

GENERAL PLAN LAYOUT (MODULAR EXPANSION JOINT)

NORTH ABUTMENT LEFT BRIDGE SHOWN
OTHER ABUTMENTS SIMILAR
REQUIRED 4 NUMBERS

TO BE PROVIDED BY
Δ WBA STM D-600 OR ✣ D.S. BROWN

NOTE:

MODULAR EXPANSION JOINT AND DETAILS TO BE PROVIDED BY THE FOLLOWING MANUFACTURERES:

Δ WBA STM D-600 BY WATSON BOWMAN-ACME CORPORATION 95 PINEVIEW DRIVE, AMHERST, NY 14225

✣ D-160 BY THE D.S. BROWN COMPANY, INC. NORTH BALTIMORE, OHIO 45872-0158

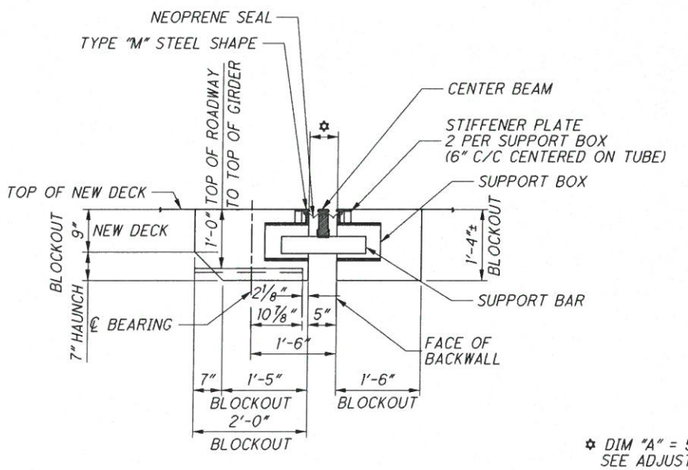

✣ DIM "A" = 5" @ 60°F SEE ADJUSTMENT CHART

MODULAR JOINT DETAIL

DESIGN AGENCY
KORDA
KORDA/NEMETH ENGINEERING
1650 WATERMARK DRIVE, SUITE 200
COLUMBUS, OHIO 43215-1094
WEB www.korda.com
TEL (614) 487-1650
FAX (614) 487-1651

DESIGNED	DRAWN	REVIEWED	DATE
JKS	JM		
CHECKED	REVISED	STRUCTURE FILE NUMBER	
CAB		7600488L/7600518R	

MODULAR EXPANSION JOINT LAYOUT
BRIDGE NO.: STA-21-1248 L & R
OVER TUSCARAWAS RIVER, R.J. CORMAN R.R. AND T.R.353

STA-21-12.48
PID No. 25433

\Projects\2006\2006-0007 STA-21-12.48 Part 2\Structural-Bridge\Drawings\026_021_1248LEX001.dgn 7/28/2006 11:22:34 AM
26_021_1248LEX001.dgn

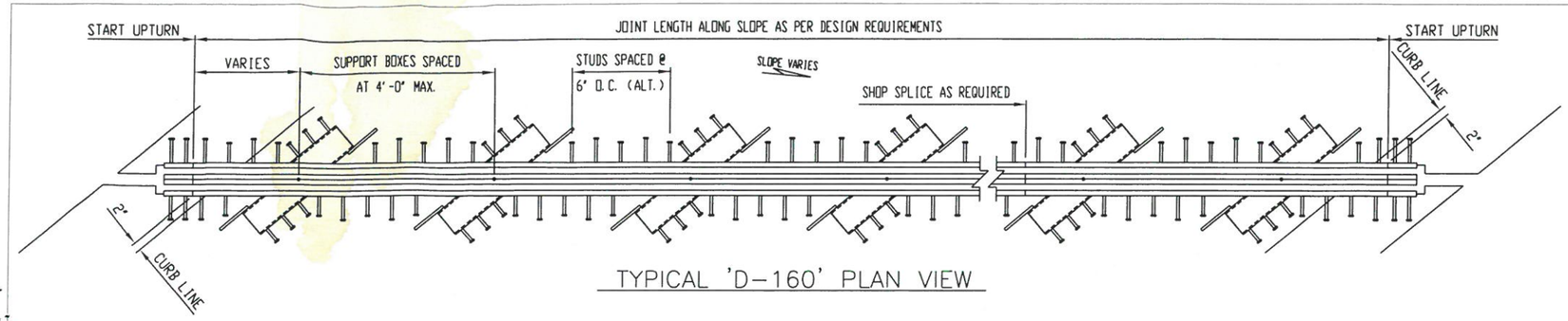

TYPICAL 'D-160' PLAN VIEW

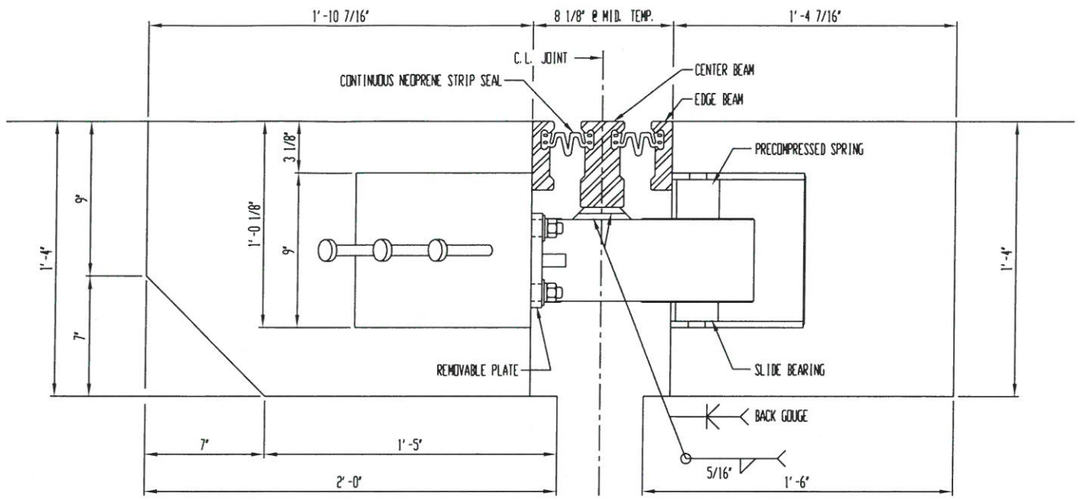

TYPICAL SECTION THRU 'D-160' EXPANSION JOINT @ SUPPORT BOX

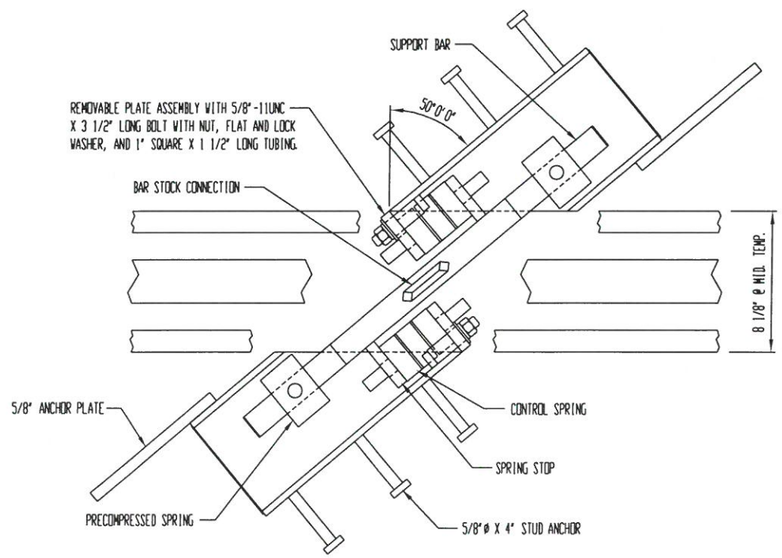

PLAN VIEW OF 'D-160' EXPANSION JOINT @ SUPPORT BOX

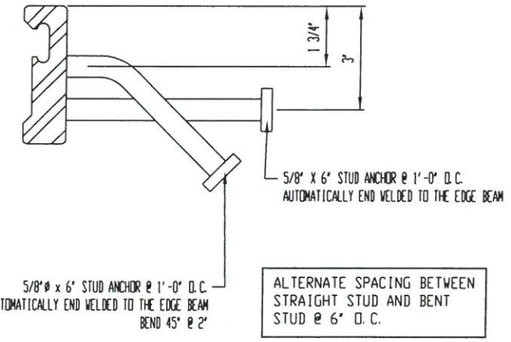

EDGE BEAM ANCHORAGE

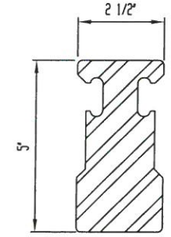

CENTER BEAM DETAIL
ASTM A709 GRADE 50 (ASTM A572) OR
ASTM A709 GRADE 50W (ASTM A588) STEEL

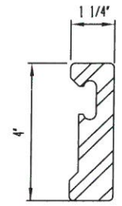

EDGE BEAM DETAIL
ASTM A709 GRADE 50 (A572) OR
ASTM A709 GRADE 50W (ASTM A588) STEEL

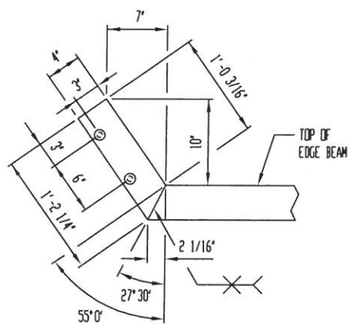

EDGE BEAM UPTURN DETAIL

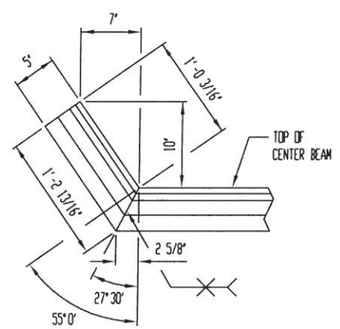

CENTER BEAM UPTURN DETAIL

'L2' STRIP SEAL

REV.	DESCRIPTION	DATE	DET.	CKD.

D.S. BROWN
300 E. CHERRY STREET
NORTH BALTIMORE, OHIO 45872
419.257.3561
FAX: 419.257.0332
4201 NOREX DRIVE
CHASKA, MINNESOTA 55318
952.368.3000
FAX: 952.448.7000
DSBROWN.COM

	ITEM	QUANTITY
LOCATION — TUSCARAWAS RIVER, R.J. CROMAN R.R. AND T.R. 353	–	–
BRIDGE — STA-21-1248	–	–
P.I.D. NO. — 25433	–	–
F.A.P. NO. — –	–	–
P.O. NO. — –	–	–
DESIGNER — –	–	–
CUSTOMER — –	–	–
	–	–

DESCRIPTION	SCALE	DRAWN BY	CHECKED BY	DATE	BRIDGE SHEET
"D-160" SECTIONS & STANDARD DETAILS OHIO	N.T.S.	RES	–	07-17-06	1 OF 1
	PROJECT NUMBER	PRODUCT CODE	RELEASE	SHEET	
	–	–	1	1	

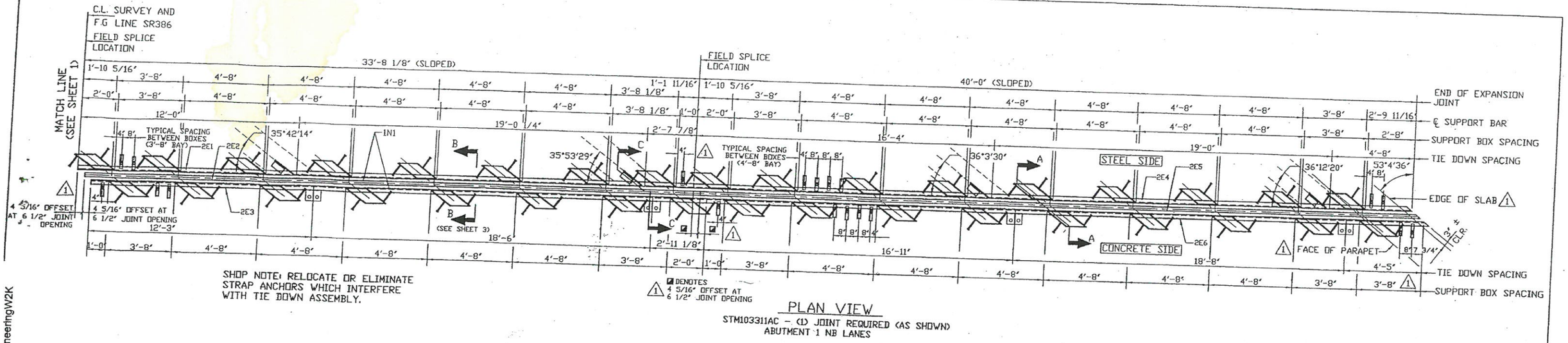

PLAN VIEW

STM103311AC – (1) JOINT REQUIRED (AS SHOWN)
ABUTMENT 1 NB LANES

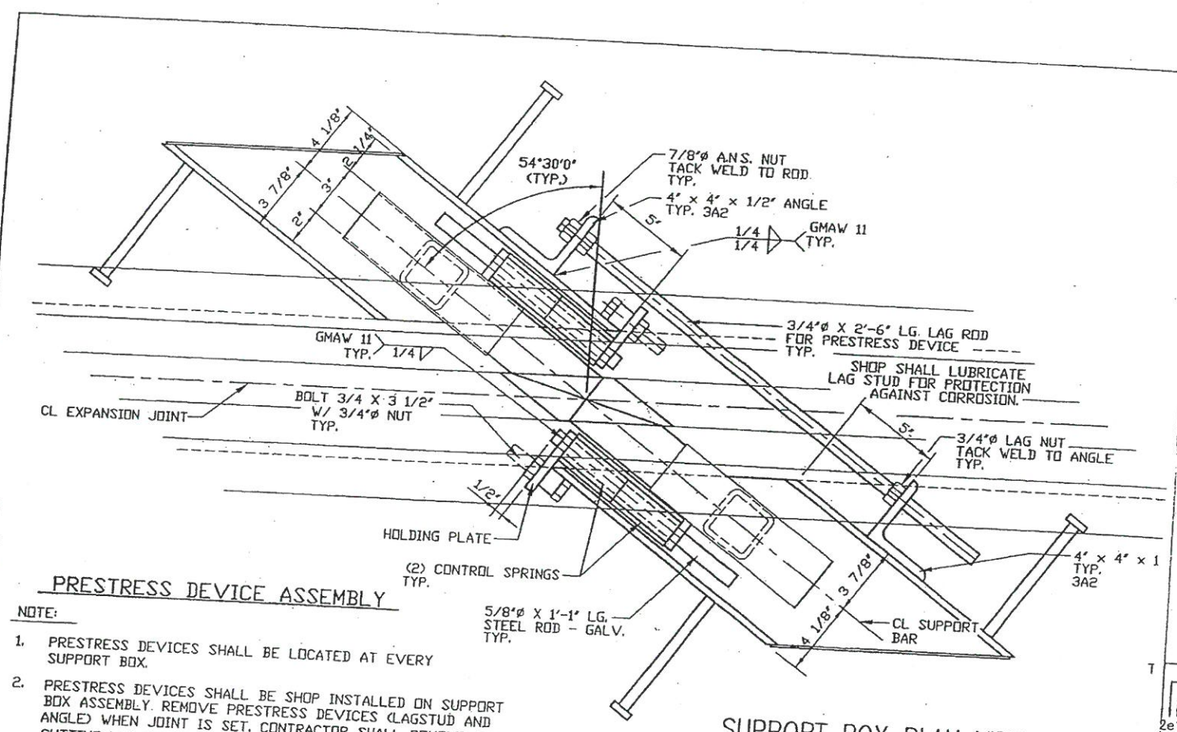

PRESTRESS DEVICE ASSEMBLY

NOTE:

1. PRESTRESS DEVICES SHALL BE LOCATED AT EVERY SUPPORT BOX.
2. PRESTRESS DEVICES SHALL BE SHOP INSTALLED ON SUPPORT BOX ASSEMBLY. REMOVE PRESTRESS DEVICES (LAGSTUD AND ANGLE) WHEN JOINT IS SET. CONTRACTOR SHALL REMOVE BY CUTTING LAG STUD OR ANGLES IN THE FIELD WITH A TORCH OR SAW. CONTRACTOR SHALL LEAVE APPROXIMATELY A 1" 'STUB' OF ANGLE ATTACHED TO THE SUPPORT BOX
3. THIS IS A TEMPORARY DEVICE USED FOR ADJUSTMENT.

SUPPORT BOX PLAN VIEW

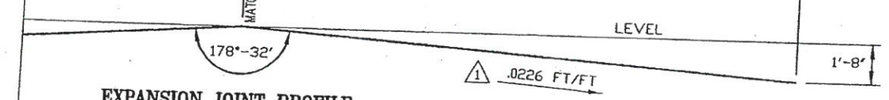

EXPANSION JOINT PROFILE

ALL DIMENSIONS SHOWN ARE TAKEN ALONG THE CENTERLINE OF THE EXPANSION JOINT

SHEET NUMBER
ITEM DESIGNATION
ITEM NUMBER
2e1
SYSTEM

DESCRIPTION	BY	DATE
REVISIONS PER ENGINEERS COMMENTS	JFW	4-4-05

n provided herein, including but not limited to, any drawing, design, photograph, graphic, or statement(s) ("Materials") are
y and the property of Watson Bowman Acme Corporation ("Company"). Reproduction, translation, or reduction to any electronic
machine readable form, in whole or part, is strictly prohibited, except for the express purpose for which it has been furnished
or written consent of Company. All Materials contained herein are provided by Company for information purposes only.
reserves the right to amend or withdraw any information contained in the Materials without notice. All technical or other advice
by Company, whether verbal or written concerning products or the use of products in specific situations ("Advice") is given by Company
and is used at the Users own risk.

WATSON BOWMAN ACME CORPORATION
85 PINEWAY DRIVE AMHERST N.Y. 14228
TEL. (716) 691-7566 FAX (716) 691-8239

wabo®

PROJECT: STATE ROUTE 386 OVER STATE ROUTE 6 AND RAMP F

WBA STM-800 MODULAR EXPANSION JOINT DETAILS

STATE:	TENNESSEE
COUNTY:	SUMNER
CONTRACT NO.:	CNB271
STATE PROJECT NO:	83076-3231-04
FED PROJECT NO:	
BRIDGE NO:	4
ROUTE:	386 STA: 393+36.98
W.B.A PRODUCT NO:	STM103311AC
JOINT TYPE:	MODULAR STM-800

DETAILED BY: JFW	DATE: 3-14-05
CHECKED BY: HMS	DATE: 3-22-05
SCALE: NTS	WBA JOB NO.: 103311
SHEET NO.: 2 OF 9	DRAWING NO.: B-23274

1 1/4"
DATE: 4-4-05

g, 4/4/2005 9:06:40 AM, \\WBAW2K\Engineering\W2K
:02:28 AM, \\WBAW2K\Engineering\W2K

ITEM 513 STRUCTURAL STEEL MEMBERS, MODULAR EXPANSION JOINT, LEVEL UF, AS PER PLAN (MARCH 16, 2005)

A. DESCRIPTION

1. FURNISH ALL MATERIALS, SERVICES, LABOR, TOOLS, EQUIPMENT AND INCIDENTALS NECESSARY TO DESIGN, FABRICATE, INSPECT, TEST AND INSTALL MODULAR EXPANSION JOINTS IN ACCORDANCE WITH THE PLANS AND THESE NOTES. ALL REQUIREMENTS OF 513, UF LEVEL FABRICATION APPLY, UNLESS MODIFIED BY THESE NOTES.

B. DESIGN

1. PREPARE AND CHECK THE DESIGN UNDER THE AUTHORITY OF AN OHIO REGISTERED PROFESSIONAL ENGINEER. THE REGISTERED ENGINEER SHALL SEAL, SIGN, AND DATE THE DESIGN CALCULATIONS AND SHOP DRAWINGS.

2. INCLUDE DESIGN CALCULATIONS WITH THE CONTRACTOR'S SUBMISSION OF SHOP DRAWINGS PER 513.06.

3. PROVIDE A DETAILED INSTALLATION PROCEDURE AND INCLUDE ANY SPECIFIC MANUFACTURER'S NOTES NECESSARY FOR COMPLETION OF THE WORK.

4. DESIGN AND TEST THE MODULAR JOINT COMPONENTS, JOINT ARMOR, AND ANCHORAGES ACCORDING TO THE NATIONAL COOPERATIVE HIGHWAY RESEARCH PROGRAM (NCHRP) REPORT # 402 APPENDIX A AND B.

5. DESIGN TEMPORARY AND FIELD CONNECTIONS TO THE BRIDGE TO ACCOMMODATE ADJUSTMENTS FOR ROADWAY GEOMETRY AND VARYING TEMPERATURE.

6. DESIGN FOR THE PLAN SPECIFIED MOVEMENT FOR A COLD CLIMATE AS SPECIFIED BY 2002 AASHTO STANDARD SPECIFICATIONS FOR HIGHWAY BRIDGES SECTION 3.16.

7. SUPPLY SUPPORT BAR BEARINGS TO TRANSFER THE LOAD FROM THE SUPPORT BARS TO THE JOINT ARMOR.

8. SUPPLY EQUALIZATION SPRINGS TO COUNTER THE COMPRESSION FORCES FROM THE SEALING ELEMENTS AND MAINTAIN EQUAL EXPANSION PROPERTIES FOR EACH SEALING ELEMENT ACROSS THE JOINT.

9. SUPPLY CONTROL SPRINGS WHICH WORK LONGITUDINALLY TO MAINTAIN EQUIDISTANT SPACING BETWEEN TRANSVERSE SEPARATION BEAMS.

10. SUPPLY SEPARATION BEAMS/TRANSVERSE DIVIDERS/CENTER BEAMS TO LIMIT TOTAL HORIZONTAL MOVEMENT IN ANY INDIVIDUAL STRIP SEAL.

11. SUPPLY A STRIP SEAL TYPE SEAL CONNECTED TO MATCHING RETAINERS CONNECTED TO THE JOINT ARMOR AND THE SEPARATION BEAMS. DO NOT EXCEED 3.15 INCHES OF TOTAL HORIZONTAL MOVEMENT IN ANY INDIVIDUAL STRIP SEAL.

12. SUPPLY REMOVABLE AND REPLACEABLE NEOPRENE SEALS, SUPPORT BAR, BEARINGS AND EQUALIZATION SPRINGS.

13. SET SEALS AND RETAINERS 1/8" LOWER THAN THE ROADWAY SURFACE.

14. DESIGN AND FABRICATE THE MODULAR JOINT AS A CONTINUOUS FULL LENGTH MEMBER WITHOUT FIELD SPLICES, UNLESS PHASED CONSTRUCTION OR EXCESSIVE LENGTHS (GREATER THAN 70'-0") PROHIBITS MONOLITHIC FABRICATION.

15. SUPPLY A SLIDING STEEL COVER PLATE AT SIDEWALKS.

C. MATERIALS

1. SUPPLY STRUCTURAL STEEL MEETING ASTM A709 GRADE 50. SUPPLY SEPARATION BEAMS/ TRANSVERSE DIVIDERS/ CENTER BEAMS, EDGE BEAMS AND JOINT ARMOR MEETING CHARPY V NOTCH IMPACT REQUIREMENTS PER ASTM A709, TABLE S1.2, ZONE 2 TEMPERATURE RANGE. SUPPLY TUBE SECTIONS MEETING ASTM A501 OR A500 GRADE B.

2. SUPPLY ASTM A240, TYPE 304 STAINLESS STEEL, 13 GAGE MINIMUM THICKNESSES WITH NO. 8 FINISH FOR SLIDING SURFACES IN CONTACT WITH PTFE.

3. SUPPLY TESTING AND REPORTS BY THE MANUFACTURER OR AN INDEPENDENT TESTING LABORATORY FOR ALL ELASTOMERIC, PTFE, URETHANE AND PREFORMED FABRIC MATERIALS USED IN ALL BEARINGS AND SPRINGS. THE SUBMISSION OF MATERIAL CERTIFICATION AND TESTING DATA SHALL BE PER 513.08. THESE MATERIALS SHALL BE TESTED ACCORDING TO THE NATIONAL COOPERATIVE HIGHWAY RESEARCH PROGRAM (NCHRP) REPORT #402 APPENDIX A GUIDELINE FOR DURABILITY TESTING OF SPRINGS AND BEARINGS FOR MBEJ.

4. SUPPLY STRIP SEALS CONFORMING TO ASTM D5973. SUBMIT CERTIFIED TEST DATA PER 513.08 FROM THE MANUFACTURER OR AN ACCREDITED LABORATORY. D5973 SECTION 8, LOT SIZE IS ONE SAMPLE PER JOINT. A SAMPLE IS A PIECE 4 FEET LONG WITH ALL MANUFACTURES' MARKINGS. THE SEAL AND RETAINER ARE AN INTEGRAL SYSTEM SUPPLIED BY ONE MANUFACTURER.

5. SEAL RETAINERS: EXTRUDE, HOT ROLL OR MACHINE, STEEL RETAINERS INTO A SOLID SHAPE. RETAINERS MANUFACTURED FROM BENT PLATE OR BUILT UP PIECES ARE NOT ACCEPTABLE. THE INTERNAL DIMENSIONS OF THE RETAINER SHALL BE SPECIFIED BY THE MANUFACTURER TO ACHIEVE POSITIVE SEAL ANCHORAGE.

6. SEPARATION BEAMS/TRANSVERSE DIVIDERS/CENTER BEAMS SHALL BE A SOLID, NON WELDED MACHINED OR EXTRUDED STEEL SECTION.

7. LUBRICANT - ADHESIVE. ONE PART MOISTURE CURING POLYURETHANE COMPOUND MEETING THE REQUIREMENTS OF ASTM D4070 AND AS SPECIFIED BY THE SEAL MANUFACTURER.

8. HARDWARE SHALL BE ASTM A325 TYPE ONE, GALVANIZED OR A449 GALVANIZED.

D. FABRICATION

1. THE MODULAR JOINTS SHALL BE FABRICATED ACCORDING TO 513.

2. SHOP ASSEMBLED THE MODULAR JOINT WITH ALL COMPONENTS EXCEPT, NEOPRENE SEALS, PER 513.24 EXCEPT THAT FULL ASSEMBLY IS REQUIRED WITH PHASED CONSTRUCTION.

3. JOINTS IN STRIP SEALS: NO JOINTS ARE ALLOWED.

4. JOINTS IN RETAINERS: WELDS ARE WATER TIGHT, PARTIAL PENETRATION WELDS AROUND THE OUTER PERIPHERY OF THE ABUTTING SURFACES. MAKE SLICES ONLY IN COMPRESSION ZONES OF THE JOINT ARMOR. GRIND FLUSH ALL WELDS IN CONTACT WITH THE SEAL AND JOINT ARMOR. DO NOT USE SHORT PIECES OF RETAINERS LESS THAN 6'-0" LONG, UNLESS REQUIRED AT CURBS OR SIDEWALKS. DO NOT PROVIDE ADDITIONAL SPLICES IN RETAINERS AT CURB OR SIDEWALK SECTIONS OTHER THAN REQUIRED FOR GEOMETRY.

5. SHOP OR FIELD WELDS OF CENTER BEAMS AND JOINT ARMOR, SHALL BE COMPLETE PENETRATION WELDS, GROUND TO PROVIDE SMOOTH TRANSITIONS AND BE 100% ULTRASONICALLY TESTED PER AASHTO/AWS BRIDGE WELDING CODE, WITH TENSION ACCEPTANCE CRITERIA, WITNESSED BY THE DEPARTMENT.

6. THE SEPARATION BEAMS/TRANSVERSE DIVIDERS/CENTER BEAMS TO SUPPORT BAR CONNECTIONS SHALL BE COMPLETE PENETRATION WELDS, GROUND TO PROVIDE SMOOTH TRANSITIONS AND BE 100% ULTRASONICALLY TESTED PER AASHTO/AWS BRIDGE WELDING CODE, WITH TENSION ACCEPTANCE CRITERIA, WITNESSED BY THE DEPARTMENT.

7. TEMPORARY SUPPORTS: FABRICATOR DESIGNED AND INSTALLED SUPPORTS ARE REQUIRED TO SUPPORT SHIPPING, ERECTION AND CONSTRUCTION FORCES WITHOUT DAMAGE TO THE STEEL ARMOR OR COATINGS. THESE SUPPORTS SHALL BE ADJUSTABLE FOR FIELD TEMPERATURE SETTING.

E. COATING

1. GALVANIZE OR METALIZE ALL STEEL SURFACES AND COMPONENTS, EXCEPT AT STAINLESS STEEL AND PTFE SLIDING SURFACES. THESE COATINGS MAY BE MIXED ON ONE ASSEMBLY, IF ALL SIMILAR COMPONENTS OF THE ASSEMBLY HAVE THE SAME COATING TYPE.

2. PROVIDE A GALVANIZED COATING PER ASTM A123, WITH A MINIMUM THICKNESS OF 4 MILS. CLEAN EXCESSIVE GALVANIZING AS NECESSARY TO ACHIEVE MECHANICAL MOVEMENT AND SEAL INSTALLATION.

3. PROVIDE A METALIZED COATING PER SOCIETY FOR PROTECTIVE COATINGS (SSPC) SPECIFICATION SSPC-CS23.00 (MARCH 17, 2003) FOR THERMAL SPRAY METALLIC COATINGS. THE COATING SHALL BE A MINIMUM OF 8 MILS THICK. THE METALIZING WIRE SHALL BE 100% ZINC. AREAS OF STRUCTURAL STEEL THAT ARE IN CONTACT WITH CAST-IN-PLACE CONCRETE SHALL HAVE AN ADDITIONAL COATING. THE COATING SHALL BE THE EPOXY INTERMEDIATE COAT SPECIFIED IN SUPPLEMENT 910. THE COATING THICKNESS WILL COVER ALL PEAKS, VALLEYS AND SURFACE ROUGHNESS ATTRIBUTED TO METALIZING.

4. COATING REPAIRS: DAMAGED COATINGS SHALL BE REPAIRED BY ASTM A780, ANNEX "A1. REPAIR USING ZINC BASED ALLOYS." THE PROCEDURE SHALL BE AS FOLLOWS: REMOVE SURFACE CONTAMINATES, PREHEAT TO 600 DEGREES F, AND APPLY ZINC COATING BY RUBBING WITH A PURE ZINC STICK OR SPRINKLING ZINC POWDER ON THE PREHEATED SURFACE, TO ACHIEVE A MINIMUM COATING THICKNESS OF 6 MILS.

5. THE GALVANIZED OR METALIZED COATINGS SHOULD NOT BE FIELD PAINTED, EXCEPT FOR AREAS DAMAGED BY CONNECTION TO PAINTED SUPERSTRUCTURE STEEL MEMBERS. THESE AREAS SHALL BE PAINTED USING THE SAME SYSTEM SPECIFIED FOR THE SUPERSTRUCTURE.

6. PRIOR TO SHIPPING RETAINER GROOVES SHALL BE PROTECTED FROM CONSTRUCTION DEBRIS BY THE INSTALLATION OF BACKER RODS OR OTHER EFFECTIVE MASKING TECHNIQUES.

DESIGN AGENCY
KORDA
KORDA/NEMETH ENGINEERING
6377 Emporium Square, Suite E
Columbus, Ohio 43231
WEB www.korda.com
PHONE (614) 487-1900
FAX (614) 487-1999

DESIGNED	DRAWN	REVIEWED	DATE
SM	JM	RWE	7/27/06
CHECKED	REVISED	STRUCTURE FILE NUMBER	
JKS		7600488L/7600518R	

MODULAR EXPANSION JOINT NOTES
BRIDGE NO.: STA-21-1248 L & R
OVER TUSCARAWAS RIVER, R.J. CORMAN R.R. AND T.R.353

STA-21-12.48
PID No. 25433

29 / 34

109
115

7/28/2006 11:22:32 AM
\Projects\2006\2006-0007 STA-21-12.48 Part 2\Structural-Bridge\Drawings\029_02L1248LEX004.dgn
29_02L1248LEX004.dgn

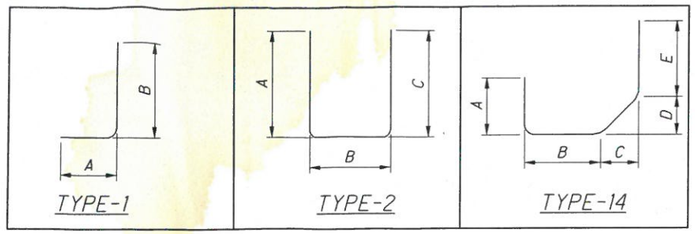

PIER CAPS

MARK	NUMBER							LENGTH	WEIGHT	TYPE	DIMENSIONS						
	LBP1	LBP2	LBP3	RBP1	RBP2	RBP3	TOTAL				A	B	C	D	E	R	INC

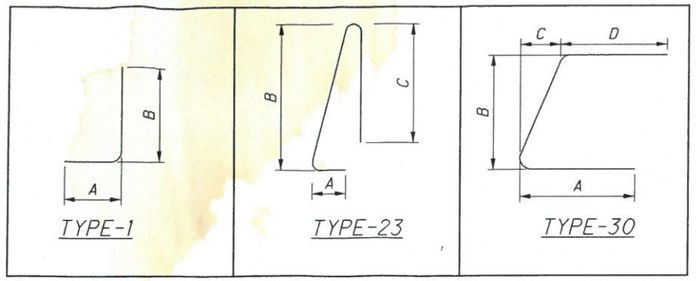

SUPERSTRUCTURE

MARK	NUMBER			LENGTH	WEIGHT	TYPE	DIMENSIONS						
	LEFT	RIGHT	TOTAL				A	B	C	D	E	R	INC
SUB-TOTAL													
SUB-TOTAL													

DESIGN AGENCY
KORDA
KORDA/RICHTER ENGINEERING
9800 WATERMARK DRIVE, SUITE 200, COLUMBUS, OHIO 43235
TEL (614) 487-1650 www.korda.com
FAX (614) 487-1651

DESIGNED	DRAWN	REVIEWED	DATE
CAB	CAB	RWE	7/27/06
CHECKED	REVISED	STRUCTURE FILE NUMBER	
JKS		7600488L/7600518R	

REINFORCING STEEL LIST
BRIDGE NO.: STA-21-1248 L & R
OVER TUSCARAWAS RIVER, R.J. CORMAN R.R. AND T.R.353

STA-21-12.48
PID No. 25433

33/34

(113/115)

7/28/2006 11:22:21 AM
\Projects\2006\2006-0007 STA-21-12.48 Part 2\Structural-Bridge\Drawings\033_02L_I248LRL003.dgn
13_02L_I248LRL003.dgn

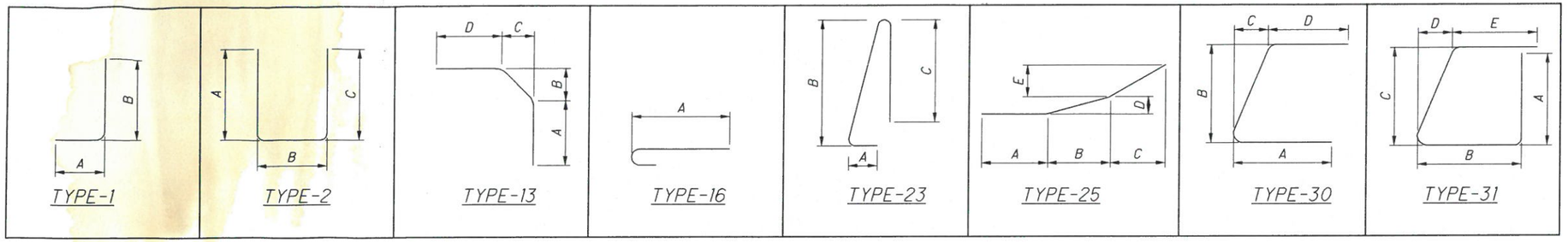

APPROACH SLABS

MARK	NUMBER					LENGTH	WEIGHT	TYPE	DIMENSIONS						
	LBRA	LBFA	RBRA	RBFA	TOTAL				A	B	C	D	E	R	INC

STA-21-12.48
CONGRESS LANDS
SECTION 6, TOWN 10, RANGE 9
PERRY TOWNSHIP
STARK COUNTY

BASIS FOR BEARINGS:

ALL BEARINGS SHOWN ARE FOR PROJECT USE ONLY.

NOTES:
THE EXISTING HIGHWAY RIGHT-OF-WAY AND RAILROAD PROPERTY LINE LOCATIONS WERE DETERMINED USING RAILROAD TRACK MAPS AND STA-21-12.39 RIGHT-OF-WAY PLANS.

PROJECT COORDINATES AND ELEVATIONS ARE BASED UPON U.S.G.S. STATE PLANE DATUM NAD83(86) AND NAVD88, OHIO NORTH ZONE (3401).

NORFOLK SOUTHERN RAILWAY CO. VALUATION MAPS ARE NORFOLK SOUTHERN RECORD NUMBER 2431001, AND VS 2OHIOMAP1.
R.J. CORMAN RAILROAD CO. VALUATION MAP IS V122.4-NO.30.

(1) CURVE DATA
RADIUS: 2815'
DELTA: 3°58'16"
ARC LENGTH: 195.10'
CHORD BEARING: S 12°07'21" W
CHORD LENGTH: 195.06'

(2) CURVE DATA
RADIUS: 2915'
DELTA: 1°21'27"
ARC LENGTH: 69.06'
CHORD BEARING: N 13°25'46" E
CHORD LENGTH: 69.06'

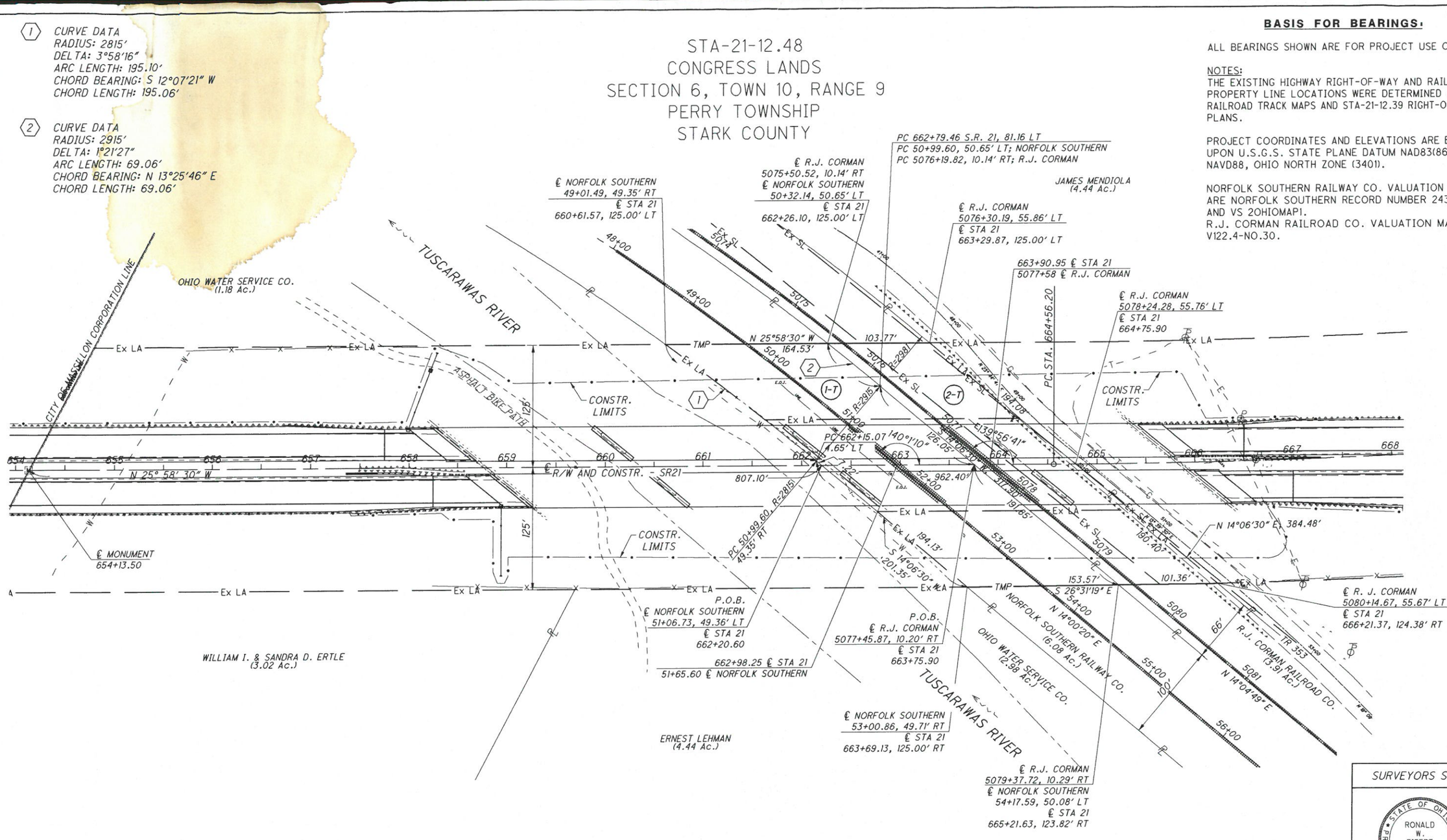

SURVEYORS SEAL:

STATE OF OHIO · RONALD W. EIFERT 6045 · REGISTERED PROFESSIONAL SURVEYOR

SIGNED:

DATE:

TOTAL NUMBER OF:
2 OWNERSHIPS
2 PARCELS
0 TOTAL TAKES
0 OWNERSHIPS WITH STRUCTURES INVOLVED
0 OWNERSHIPS WITH "P" ITEMS

NOTE:
ALL TEMPORARY PARCELS TO BE OF 18 MONTH DURATION.

SUMMARY OF ADDITIONAL R/W REQUIRED

NET RESIDUE = RECORD AREA-TOTAL P.R.O.-NET TAKE
ALL AREAS IN ACRES UNLESS OTHERWISE NOTED

PARCEL	OWNER	OWNERS RECORD INSTRUMENT NO.	AUDITOR'S PARCEL	RECORD AREA	TOTAL P.R.O.	GROSS TAKE	PRO IN TAKE	NET TAKE	STRUCTURE	NET RESIDUE LEFT	NET RESIDUE RIGHT	TYPE FUND	REMARKS & PERSONALITY	AS ACQUIRED BOOK	AS ACQUIRED PAGE
1-T	NORFOLK SOUTHERN RAILWAY CO.	200004270023986	4799006	6.08 Ac.		0.898	0.000	0.898	NO			STATE	WORK AREA FOR BRIDGE CONSTRUCTION		
2-T	R.J. CORMAN RAILROAD CO.	19950324001737	4799001	3.91 Ac.		0.584	0.000	0.584	NO			STATE	WORK AREA FOR BRIDGE CONSTRUCTION		

REV. BY	DATE	DESCRIPTION
FIELD REVIEW BY		DATE:
OWNERSHIP VERIFIED BY		DATE:
DATE COMPLETED 6/2/2006		

HORIZONTAL SCALE IN FEET: 0 25 50 100

PID NO. 25433

R/W DESIGNER NWA
R/W REVIEWER RWE

RAILROAD PLAT

STA-21-12.48

1 / 1

115 / 115

7/31/2006 11:58:55 AM

H:\Projects\2006\2006-0007 STA-21-12.48 Part 2\Civil\Drawings\Right-of-Way\25433RD001.dgn

25433RD001.dgn

"AS FILED"

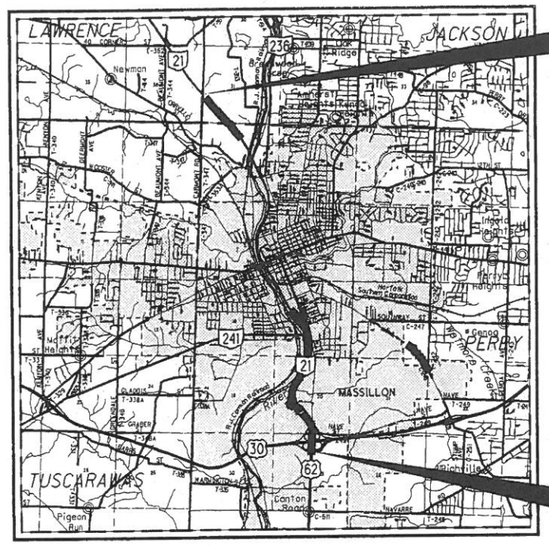

LOCATION MAP

LATITUDE: N41°47'39" LONGITUDE: W81°31'36"

SCALE IN MILES

0 1 2 3 4

N

PORTION TO BE IMPROVED

INTERSTATE & DIVIDED HIGHWAY

UNDIVIDED STATE & FEDERAL ROUTES

OTHER ROADS

DESIGN FUNCTIONAL CLASSIFICATION:
URBAN OTHER FREEWAY AND EXPRESSWAY

NHS PROJECT YES

DESIGN EXCEPTIONS

NONE

UNDERGROUND UTILITIES

CONTACT BOTH SERVICES
CALL TWO WORKING DAYS
BEFORE YOU DIG

CALL
1-800-362-2764
(TOLL FREE)
OHIO UTILITIES PROTECTION SERVICE
NON-MEMBERS
MUST BE CALLED DIRECTLY

OIL & GAS PRODUCERS PROTECTIVE SERVICE CALL: **1-800-925-0988**

PLAN PREPARED BY:
OHIO DEPARTMENT OF TRANSPORTATION
DISTRICT 4
OFFICE OF PRODUCTION
2088 SOUTH ARLINGTON ROAD
AKRON, OHIO 44306

STATE OF OHIO

DEPARTMENT OF TRANSPORTATION

STA-21-8.25
PART 1

CITY OF MASSILLON

PERRY & JACKSON TOWNSHIPS

STARK COUNTY

FOR PART 2 SEE STA-21-12.48

INDEX OF SHEETS:

TITLE SHEET	1
TYPICAL SECTIONS	2
GENERAL NOTES	3-4
MAINTENANCE OF TRAFFIC	5-7
GENERAL SUMMARY	8-9
ASPHALT CONCRETE SHEET	10
MISCELLANEOUS DETAILS	11-14
TRAFFIC CONTROL	15-40

PROJECT DESCRIPTION

MINOR REHAB/RESURFACING OF PAVEMENT ON S.R. 21 FROM MASSILLON SOUTH LIMITS (SLM 8.25) TO EDWIN AVE. (SLM 10.29) AND SLM 12.78 TO LAWRENCE TOWNSHIP LINE (SLM 13.66) IN STARK COUNTY.

PROJECT EARTH DISTURBED AREA: 0.0 ACRES
ESTIMATED CONTRACTOR EDA: N/A (MAINTENANCE PROJECT)
NOTICE OF INTENT EDA: N/A (MAINTENANCE PROJECT)

LIMITED ACCESS

THIS IMPROVEMENT IS ESPECIALLY DESIGNED FOR THROUGH TRAFFIC AND HAS BEEN DECLARED A LIMITED ACCESS HIGHWAY OR FREEWAY BY ACTION OF THE DIRECTOR IN ACCORDANCE WITH THE PROVISIONS OF SECTION 5511.02 OF THE OHIO REVISED CODE.

2005 SPECIFICATIONS

THE STANDARD SPECIFICATIONS OF THE STATE OF OHIO, DEPARTMENT OF TRANSPORTATION, INCLUDING CHANGES AND SUPPLEMENTAL SPECIFICATIONS LISTED IN THE PROPOSAL SHALL GOVERN THIS IMPROVEMENT.

I HEREBY APPROVE THESE PLANS AND DECLARE THAT THE MAKING OF THIS IMPROVEMENT WILL NOT REQUIRE THE CLOSING TO TRAFFIC OF THE HIGHWAY AND THAT PROVISIONS FOR THE MAINTENANCE AND SAFETY OF TRAFFIC WILL BE AS SET FORTH ON THE PLANS AND ESTIMATES.

ENGINEERS SEAL:

STATE OF OHIO · THOMAS J POWELL · E-61151 · REGISTERED PROFESSIONAL ENGINEER

SIGNED: [signature]
DATE: 02-27-07

STANDARD CONSTRUCTION DRAWINGS

BP-2.3	7/16/04	GR-3.2	1/19/07	MT-35.10	4/20/01	TC-41.20	1/19/01				
BP-3.1	7/16/04	GR-3.5	4/18/03	MT-95.30	9/05/06	TC-42.20	7/16/04				
BP-6.1	7/28/00	GR-4.2	1/19/07	MT-95.40	10/20/06	TC-52.10	1/19/07				
		GR-5.1	4/18/03	MT-95.70	4/19/02	TC-52.20	1/19/07				
CB-1.1	7/15/05	GR-5.2	1/16/04	MT-95.82	9/05/06	TC-65.10	1/21/05				
CB-2.1	7/15/05	GR-6.1	4/18/03	MT-98.12	4/19/02	TC-65.11	1/21/05				
				MT-98.13	4/19/02	TC-71.10	1/19/07				
DM-1.1	4/21/06	HW-2.1	4/21/06	MT-98.14	4/19/02	TC-73.10	1/19/01				
DM-1.4	4/21/06			MT-98.15	7/16/04	TC-82.10	4/19/02				
DM-4.1	7/19/02	RM-1.1	4/21/06	MT-98.16	4/19/02	MT-97.10	9/5/06				
DM-4.3	7/19/02	RM-4.2	10/20/06	MT-99.20m	1/30/95						
DM-4.4	7/19/02			MT-100.00	4/19/02						
		AS-1-81	7/19/02	MT-101.20	10/18/02						
GR-1.1	7/16/04	PCB-91	7/19/02	MT-101.70	10/18/02						
GR-2.1	1/16/04	SBR-1-99	7/19/02	MT-105.10	10/18/02						
GR-3.1	1/19/07			MT-105.11	10/18/02						

SUPPLEMENTAL SPECIFICATIONS	
800	10/19/07
832	4/25/06
843	4/18/03
845	1/19/07

SPECIAL PROVISIONS	
NWP-3	2/22/07
NWP-33	2/22/07

APPROVED [signature]
DATE 2/27/07 DISTRICT DEPUTY DIRECTOR

APPROVED
DATE DIRECTOR, DEPARTMENT OF TRANSPORTATION

FEDERAL PROJECT NO. E032(185)

PID NO. 25433

CONSTRUCTION PROJECT NO.

RAILROAD INVOLVEMENT NONE

STA-21-8.25

1 / 40

C:\Projects\STA\25433\roadway\sheets\25433GT001.dgn 27-FEB-2007 7:43AM bboughmo

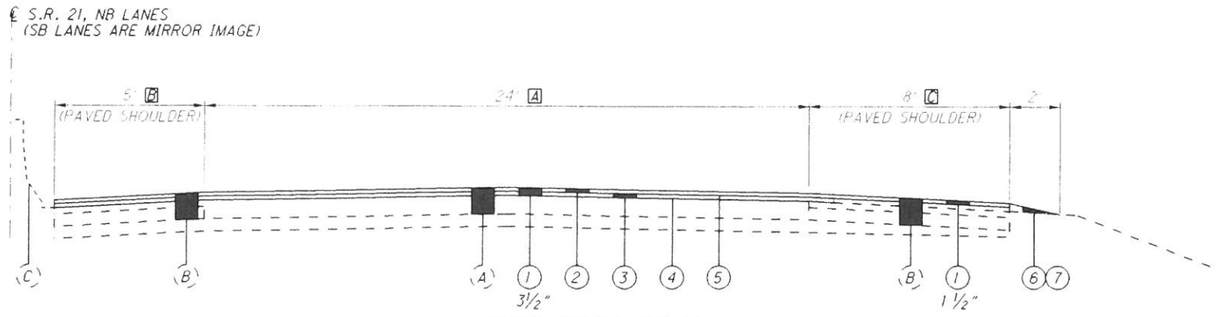

TYPICAL SECTION - S.R. 21

SLM 8.25 TO SLM 10.29 = 2.04 mi.
SLM 12.78 TO SLM 13.66 = 0.88 mi.
TOTAL = 2.92 mi.

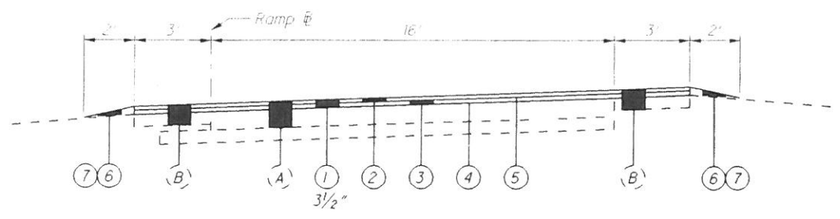

TYPICAL SECTION - RAMPS

LEGEND

1. 254, PAVEMENT PLANING, ASPHALT CONCRETE
2. 442, 1½" ASPHALT CONCRETE SURFACE COURSE, 12.5 MM, TYPE B (446), AS PER PLAN
3. 442, 2" ASPHALT CONCRETE INTERMEDIATE COURSE, 19MM, TYPE B (446)
4. 407, TACK COAT, **702.13**
5. 407, TACK COAT FOR INTERMEDIATE COURSE
6. 617, COMPACTED AGGREGATE, AS PER PLAN
7. 408, PRIME COAT, AS PER PLAN

A. EXISTING COMPOSITE PAVEMENT
B. EXISTING SHOULDER PAVEMENT
C. EXISTING CONCRETE BARRIER OR MEDIAN

NOTES:
A. 25.5' SLM 8.25 TO SLM 8.46, 25' SLM 10.24 TO SLM 10.29
B. 0' SLM 8.25 TO SLM 8.46, 6' SLM 8.84 TO SLM 9.40, 3' SLM 12.78 TO SLM 13.66
C. 4' SLM 8.25 TO SLM 8.46

TYPICAL SECTIONS

STA-21-8.25

I:\Projects\STA\25433\roadway\sheets\25433G1001.dgn 28-FEB-2007 8:45AM bbaughma

UTILITIES
THE CONTRACTOR SHALL USE THE FOLLOWING PROCEDURE AT EACH LOCATION WHERE WORK IS PERFORMED, IN ACCORDANCE WITH SECTIONS 105.07 AND 107.16 IN THE CONSTRUCTION AND MATERIALS SPECIFICATIONS.

THE CONTRACTOR SHALL NOTIFY THE PROJECT ENGINEER, THE OHIO UTILITIES PROTECTION SERVICE (OUPS), THE OHIO & GAS PROCEDURES UNDERGROUND PROTECTION SERVICE (OGPUPS), THE OHIO DEPARTMENT OF TRANSPORTATION DISTRICT 4 HEADQUARTERS AND ALL NON REGISTERED UTILITY OWNERS AT LEAST TWO (2) WORKING DAYS PRIOR TO COMMENCING CONSTRUCTION IN ALL AREAS.

OUPS 1-800-362-2764 (CONTACT LIMITED BASIS PARTICIPANTS DIRECTLY)
OGPUPS 1-800-925-0988
ODOT 330-786-3145 KEN GREENE

THE LOCATION OF EXISTING UNDERGROUND UTILITIES ARE NOT SHOWN ON THE PLANS, BUT CAN BE OBTAINED FROM THE OWNERS OF THE UTILITIES. THE CONTRACTOR IS RESPONSIBLE FOR ANY DAMAGE TO UTILITIES.

PAVEMENT MARKING LANE WIDTHS
THE NORMAL LANE WIDTH FOR THE PAVEMENT MARKINGS ON THIS PROJECT SHALL BE AS FOLLOWS:

ROUTE	S.L.M. TO S.L.M.	LANE WIDTH
S.R. 21	8.25 TO 10.29	12'
S.R. 21	12.78 TO 13.66	12'
RAMPS		AS PER PROJECT ENGINEER

ITEM 304 AGGREGATE BASE, AS PER PLAN
GRANULATED SLAG (GS) SHALL NOT BE PERMITTED FOR THIS ITEM. ALL OTHER REQUIREMENTS OF SECTIONS 304 AND 703.17 OF THE CONSTRUCTION AND MATERIAL SPECIFICATIONS SHALL STILL BE APPLICABLE.

CLEARING AND GRUBBING
ALTHOUGH THERE ARE NO TREES OR STUMPS SPECIFICALLY MARKED FOR REMOVAL WITHIN THE LIMITS OF THE PROJECT, A LUMP SUM QUANTITY IS INCLUDED IN THE GENERAL SUMMARY FOR ITEM 201, CLEARING AND GRUBBING. ALL PROVISIONS AS SET FORTH IN THE SPECIFICATIONS UNDER THIS ITEM ARE INCLUDED IN THE LUMP SUM PRICE BID FOR ITEM 201, CLEARING AND GRUBBING.

GRADING AND FILLING OPERATIONS
THE PLACEMENT OF COMPACTED AGGREGATE SHALL NOT EXTEND PAST THE EXISTING GRADED SHOULDERS. NO EXCAVATION, GRADING, OR FILLING OPERATIONS SHALL BE PERFORMED IN ANY WETLANDS OR STREAMS, UNLESS THE REQUIRED STATE AND/OR FEDERAL PERMITS HAVE BEEN OBTAINED IN ACCORDANCE WITH ALL APPLICABLE STATE AND/OR FEDERAL LAWS AND REGULATIONS. UNDER NO CIRCUMSTANCES SHALL THE CONTRACTOR STORE EQUIPMENT AND/OR MATERIALS IN ANY WETLANDS OR STREAMS.

WORK LIMITS
THE WORK LIMITS SHOWN ON THESE PLANS ARE FOR PHYSICAL CONSTRUCTION ONLY. PROVIDE THE INSTALLATION AND OPERATION OF ALL WORK ZONE TRAFFIC CONTROL AND WORK ZONE TRAFFIC CONTROL DEVICES REQUIRED BY THESE PLANS WHETHER INSIDE OR OUTSIDE THESE WORK LIMITS.

CONVERSION OF STANDARD CONSTRUCTION DRAWINGS
CONVERT THE METRIC STANDARD DRAWINGS REFERENCED IN THIS PLAN TO ENGLISH UNITS USING THE SI (METRIC) TO ENGLISH CONVERSION FACTORS PROVIDED IN SECTION 109.02 OF THE CONSTRUCTION AND MATERIAL SPECIFICATIONS.

CONVERSIONS WILL BE APPROPRIATELY PRECISE AND REFLECT STANDARD INDUSTRY ENGLISH VALUES WHERE SUITABLE.

ITEM 254 - PAVEMENT PLANING, ASPHALT CONCRETE, AS PER PLAN
THIS ITEM OF WORK SHALL BE PERFORMED IN CONFORMANCE WITH ITEM 254 IN THE CMS EXCEPT THE DEPTH SHALL VARY FROM 3 1/2" TO THE TOP OF CONCRETE WHICHEVER IS FIRST. THIS WORK SHALL BE PERFORMED SO THAT THE CONCRETE BASE IS NOT DISTURBED. ALL EQUIPMENT, LABOR, TOOLS, AND OTHER INCIDENTALS REQUIRED TO PERFORM THIS WORK SHALL BE INCLUDED IN THE UNIT BID PRICE FOR ITEM 254 PAVEMENT PLANING, ASPHALT CONCRETE, AS PER PLAN.

ITEM 442 - ASPHALT CONCRETE SURFACE COURSE, 12.5mm, TYPE B (446), AS PER PLAN
THE REQUIREMENTS OF 442 AND 446 SHALL APPLY; DEVIATIONS FROM THESE ARE AS FOLLOWS:

THE COMBINATION OF NEW AGGREGATES, NEW ASPHALT BINDER, AND RECLAIMED MATERIAL SHALL BE AS REQUIRED TO PRODUCE A COMPOSITION CONTAINING A MINIMUM OF 6.2% NEW ASPHALT BINDER RESULTING IN A MINIMUM TOTAL BINDER OF 6.9%.

THE PERCENTAGE OF RECLAIMED MATERIAL PROPOSED FOR USE SHALL BE INCLUDED IN THE MIX DESIGN PROCESS TO ESTABLISH THE JOB MIX FORMULA (JMF) IN ACCORDANCE WITH 401.04.

MATERIALS:	THE MATERIALS SHALL BE:
AGGREGATES	703.05*

* THE VIRGIN COURSE AGGREGATE PORTION OF THE MIXTURE SHALL BE AIR COOLED BLAST FURNACE SLAG AND MEET THE REQUIREMENTS OF 703.05.

ONLY RECLAIMED PAVEMENT FROM THIS PROJECT OR AN APPROVED EQUAL DETERMINED BY THE DISTRICT ENGINEER OF TESTS WILL BE PERMITTED FOR USE IN THIS ITEM.

THE CONTRACTOR SHALL USE THE APPROPRIATE COUNTY, ROUTE AND SECTION TO OBTAIN TRAFFIC DATA, TO BE USED IN THE DESIGN OF THE JMF, AT THIS WEB SITE LOCATION:
http://www.dot.state.oh.us/techservsite/availpro/Traffic Survey/TSR Report/default.htm

ITEM 408 - PRIME COAT, AS PER PLAN
THE CONTRACTOR WILL APPLY "MC-70" AT A RATE OF 0.4 GALLONS PER SQUARE YARD, OR AS DETERMINED BY THE ENGINEER, TO THE COMPLETED COMPACTED AGGREGATE SHOULDER.

THE CONTRACTOR SHALL PROVIDE A SHIELD TO PREVENT THE SPRAYING OR DRIFTING OF LIQUID PRIME COAT MATERIAL ONTO THE EDGE OF THE PAVEMENT OR EDGELINE. CARE ALSO SHALL BE TAKEN TO AVOID SPRAYING LIQUID PRIME COAT MATERIAL ONTO DRIVEWAY APRONS, MAILBOX APPROACHES OR ANY PEDESTRIAN AREAS. THE ATTENTION OF THE CONTRACTOR IS DIRECTED TO 107.10 OF THE SPECIFICATIONS.

ITEM 617 COMPACTED AGGREGATE, AS PER PLAN
IN LOW SHOULDER AREAS EXCEEDING 1", OR AS DIRECTED BY THE ENGINEER, RECYCLED ASPHALT PAVEMENT (RAP) SHALL BE USED IN AREAS ADJACENT TO THE PAVED BERM. THE RAP SHALL HAVE A MINIMUM PG CONTENT OF 4.5% AND MEET THE FOLLOWING GRADATION. ONCE THE STOCKPILE MEETS THE GRADATION, THE PG CONTENT OF THE RAP SHALL BE DETERMINED PER 441.03. THE RAP ANALYSIS MUST BE SUBMITTED TO THE ENGINEER FOR APPROVAL 2 WEEKS PRIOR TO USE. METHOD OF MEASUREMENT SHALL BE AS PER 617.06. PLACEMENT AND COMPACTION SHALL MEET THE REQUIREMENTS OF ITEM 617. ALL MATERIALS, LABOR, EQUIPMENT, TOOLS AND INCIDENTALS NECESSARY TO COMPLETE THE WORK SHALL BE INCLUDED IN THE UNIT PRICE BID FOR ITEM 617 COMPACTED AGGREGATE, AS PER PLAN.

MODIFIED GRADATION SHALL APPLY:

SIEVE	TOTAL PERCENT PASSING
1- 1/2"	100
3/4"	50-100
NO. 4	35-70
NO. 30	9-33
NO. 200	0-13

ITEM 606 - ANCHOR ASSEMBLY, TYPE E-98
THIS ITEM SHALL CONSIST OF FURNISHING AND INSTALLING EITHER OF THE FOLLOWING GUARDRAIL END TERMINALS, OR AN APPROVED EQUAL AS LISTED ON ROADWAY ENGINEERING'S WEB PAGE AT WWW.DOT.STATE.OH.US/DRRC/ UNDER ROADSIDE SAFETY DEVICES FOR APPROVED GUARDRAIL END TREATMENTS:
1) THE ET-2000 (1997) MANUFACTURED BY TRINITY INDUSTRY, 1170 N. STATE STREET, GIRARD, OHIO 44420 (TELEPHONE: 330-545-4373).
THE LENGTH OF THE ET-2000 (1997) SYSTEM IS CONSIDERED TO BE 50'-0", INCLUSIVE OF TWO 25'-0" LONG RAIL ELEMENTS. INSTALLATION SHALL BE AT THE LOCATIONS SPECIFIED IN THE PLANS, IN ACCORDANCE WITH THE MANUFACTURER'S SPECIFICATIONS AS DETAILED ON THE FOLLOWING PRE-APPROVED SHOP DRAWINGS:

DWG. NO.	DRAWING NAME	DWG./ REV. DATE	ODOT APPROVAL DATE
SSS265M	ET-2000 (1997) PLAN, ELEVATION AND SECTIONS	6/20/97	3/6/98
SS142	ET2000 PLUS 50'-0" PLAN, ELEVATION AND SECTION 25'-0" RAIL, SLEEVE W/PL POSTS 1-4	4/12/00	7/31/00
SS141	ET2000 PLUS PLAN, ELEVATION AND SECTION 25'-0" RAIL, HBA POSTS 1-4	2/29/00	7/31/00
SS158	ET2000 PLUS 50'-0" WITH 12'-6" PANELS AND HBA POSTS 1-4 PLAN, ELEVATION AND SECTION	5/22/00	7/31/00

2) THE SKT-350 MANUFACTURED BY ROAD SYSTEMS, INC., 2516 MALLORY LANE, STOW, OHIO, 44224, (TELEPHONE: 330-346-0721).
THE LENGTH OF THE SKT-350 SYSTEM IS CONSIDERED TO BE 50'-0", INCLUSIVE OF FOUR 12'-6" LONG RAIL ELEMENTS. INSTALLATION SHALL BE AT THE LOCATIONS SPECIFIED IN THE PLANS, IN ACCORDANCE WITH THE MANUFACTURER'S SPECIFICATIONS AS DETAILED ON THE FOLLOWING PRE-APPROVED SHOP DRAWINGS:

DWG. NO.	DRAWING NAME	DWG./ REV. DATE	ODOT APPROVAL DATE
SKT-4M	SEQUENTIAL KINKING TERMINAL (SKT-350) ASSEMBLY WITH 4 FOUNDATION TUBES	12/11/97	3/6/98

THE FACE OF THE TYPE E-98 IMPACT HEAD SHALL BE COVERED WITH A SHEET OF TYPE G REFLECTIVE SHEETING, PER CMS 730.19, APPROXIMATELY 18" X 18", OR 12" X 18" IF APPLIED TO A RECTANGULAR ET-2000 PLUS EXTRUDER HEAD.
REFER TO THE MANUFACTURER'S INSTRUCTION REGARDING THE INSTALLATION OF, AND THE GRADING AROUND, THE FOUNDATION TUBES AND GROUND STRUT. THE TOP OF ANY FOUNDATION TUBE SHOULD BE LESS THAN 4-INCHES ABOVE THE GROUND. THE PLACEMENT OF THE FOUNDATION TUBES SHOULD BE AN APPROPRIATE DEPTH BELOW THE LEVEL LINE IN ORDER TO MAINTAIN THE FINISHED GUARDRAIL HEIGHT OF 27-3/4-INCHES FROM THE EDGE OF THE SHOULDER.
ON-SITE GRADING IS REQUIRED IF THE TOP OF THE FOUNDATION TUBES OR TOP OF THE GROUND STRUT DOES PROJECT MORE THAN 4-INCHES ABOVE THE GROUND LINE.
PAYMENT FOR THE ABOVE WORK SHALL BE MADE AT THE UNIT PRICE BID FOR ITEM 606, ANCHOR ASSEMBLY, TYPE E-98, EACH, AND SHALL INCLUDE ALL LABOR, TOOLS, EQUIPMENT AND MATERIALS NECESSARY TO CONSTRUCT A COMPLETE AND FUNCTIONAL ANCHOR ASSEMBLY SYSTEM, INCLUDING ALL RELATED TRANSITIONS, REFLECTIVE SHEETING, HARDWARE, GRADING, EMBANKMENT AND EXCAVATION NOT SEPARATELY SPECIFIED, AS REQUIRED BY THE MANUFACTURER.

DESIGNED RCB
DETAILED TJP

GENERAL NOTES

STA-21-8.25

Projects\STA_21-8.25 (Roadway)\Sheets\21-8.25GN01.dgn 28 FEB '00 8:45AM Schuldhise

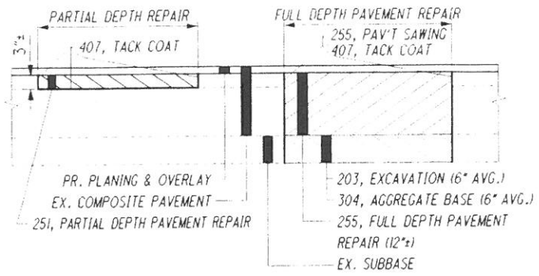

ITEM 255 - FULL DEPTH PAVEMENT REMOVAL AND RIGID REPLACEMENT, CLASS FS

A QUANTITY OF THIS ITEM SHALL BE PROVIDED FOR USE AS DIRECTED BY THE ENGINEER. THIS ITEM SHALL CONSIST OF CUTTING AND REMOVING DETERIORATED PAVEMENT FULL DEPTH AND PLACING 12"± CONCRETE, CLASS FS. UNLESS OTHERWISE DIRECTED BY THE ENGINEER, THIS ITEM SHALL BE PERFORMED AFTER THE COMPLETION OF MAINLINE PAVEMENT PLANING. ALSO, THIS ITEM SHALL COMMENCE WITHIN 7 DAYS OF THE COMPLETION OF MAINLINE PAVEMENT PLANING. IT IS NOT THE INTENT TO REPAIR EVERY DETERIORATED AREA WITHIN THE PROJECT. THE ENGINEER SHALL DETERMINE WHICH AREAS ARE TO BE REPAIRED.

PAYMENT SHALL BE BASED ON THE ACTUAL NUMBER OF SQUARE YARDS OF PAVEMENT REMOVED AND REPLACED TO THE LIMITS DESIGNATED BY THE ENGINEER. THE FOLLOWING ESTIMATED QUANTITY HAS BEEN CARRIED TO THE GENERAL SUMMARY:

255, FULL DEPTH PAVEMENT REMOVAL AND RIGID REPLACEMENT, CLASS FS	3222 SQ YD
255, FULL DEPTH PAVEMENT SAWING	9666 FT

ITEM 203 - EXCAVATION

THIS ITEM OF WORK SHALL CONSIST OF REMOVING AND DISPOSING OF ALL UNSUITABLE MATERIAL BY EXCAVATING THE EXISTING SUBGRADE AND SUBBASE TO AN AVERAGE DEPTH OF 6 INCHES OR AS DIRECTED BY THE ENGINEER. EXACT LIMITS OF REMOVAL SHALL BE DETERMINED BY THE ENGINEER. ALL EQUIPMENT, LABOR, TOOLS, AND INCIDENTALS NECESSARY TO COMPLETE THIS ITEM SHALL BE INCLUDED IN THE UNIT PRICE BID FOR ITEM 203 EXCAVATION. THE FOLLOWING ESTIMATED QUANTITY HAS BEEN CARRIED TO THE GENERAL SUMMARY:

203, EXCAVATION	537 CU YD

ITEM 304 - AGGREGATE BASE

THE FOLLOWING ESTIMATED QUANTITY HAS BEEN PROVIDED AND SHALL BE USED AS DIRECTED BY THE ENGINEER TO BACKFILL AREAS WHICH WERE EXCAVATED UNDER ITEM 203 EXCAVATION NOT INCLUDING EMBANKMENT CONSTRUCTION. THE FOLLOWING ESTIMATED QUANTITY HAS BEEN CARRIED TO THE GENERAL SUMMARY:

304, AGGREGATE BASE	537 CU YD

ITEM 251 - PARTIAL DEPTH PAVEMENT REPAIR

A QUANTITY OF THIS ITEM SHALL BE PROVIDED FOR USE AS DIRECTED BY THE ENGINEER. THE ITEM SHALL CONSIST OF REPAIRING EXISTING LOCATIONS EXHIBITING SURFACE DETERIORATION AND PLACING 3"± OF ITEM 448 ASPHALT CONCRETE, TYPE 2. THE ASPHALT CONCRETE SHALL BE COMPACTED WITH A TYPE I PNEUMATIC TIRE ROLLER AND A STEEL WHEEL ROLLER AS PER 401.13. IT IS NOT THE INTENT TO REPAIR EVERY DETERIORATED AREA WITHIN THE PROJECT. THE ENGINEER SHALL DETERMINE WHICH AREAS ARE TO BE REPAIRED. UNLESS OTHERWISE DIRECTED BY THE ENGINEER, THIS ITEM SHALL BE PERFORMED AFTER THE COMPLETION OF MAINLINE PAVEMENT PLANING. ALSO, THIS ITEM SHALL COMMENCE WITHIN 7 DAYS OF THE COMPLETION OF MAINLINE PAVEMENT PLANING. PAYMENT SHALL BE BASED ON THE ACTUAL NUMBER OF SQUARE YARDS OF PAVEMENT REPAIR. THE FOLLOWING ESTIMATED QUANTITY HAS BEEN CARRIED TO THE GENERAL SUMMARY:

251, PARTIAL DEPTH PAVEMENT REPAIR	5370 SQ YD

ITEM SPECIAL - MISC.: VERTICAL CLEARANCE

AFTER ALL CONSTRUCTION HAS BEEN COMPLETED, A REGISTERED SURVEYOR WILL TAKE VERTICAL CLEARANCE MEASUREMENTS AT LOCATIONS INDICATED ON THE APPROVED ODOT FORM (AVAILABLE IN THE DISTRICT 4 STRUCTURES AND PAVEMENT OFFICE). THE FINAL MEASUREMENTS SHALL BE RECORDED ON THE FORM AND SUBMITTED TO THE PROJECT ENGINEER AND THE DISTRICT 4 STRUCTURES AND PAVEMENT ENGINEER. THE RECORD SHALL BEAR THE SEAL OF THE LECENSED SURVEYOR WHO HAS TAKEN THE MEASUREMENTS. THIS WORK SHALL BE PERFORMED AT THE FOLLOWING STRUCTURES:

- STA-21-0839
- STA-21-0846
- STA-21-0898
- STA-21-0992

PAYMENT FOR THIS WORK SHALL BE INCLUDED WITH:

SPECIAL, MISC.: VERTICAL CLEARANCE	4 EACH

CONCRETE BARRIER AND INLET REPLACEMENT

THE FOLLOWING ESTIMATED QUANTITIES HAVE BEEN PROVIDED TO REPLACE DAMAGED MEDIAN NEW JERSEY SHAPED INLETS AND BARRIER SECTIONS WITHIN THE PROJECT LIMITS. REPLACEMENT SHALL BE AS PER PLAN INSERT SHEETS "NEW JERSEY SHAPED BARRIER" AND "NEW JERSEY SHAPED BARRIER MEDIAN INLETS 3A AND 3B". PROPOSED BARRIER DIMENSIONS SHALL MATCH ADJACENT EXISTING BARRIER SECTIONS.

EXACT LOCATIONS OF REMOVAL SHALL BE DETERMINED BY THE ENGINEER. ALL EQUIPMENT, LABOR, TOOLS, AND INCIDENTALS NECESSARY TO COMPLETE THIS ITEM SHALL BE INCLUDED IN THE PERTINENT BID ITEM.

202, CONCRETE BARRIER REMOVED	60 FT
202, INLET REMOVED	1 EACH
604, INLET, NO. 3A, AS PER PLAN	1 EACH
622, BARRIER, MISC.: CONCRETE BARRIER	60 FT

TYPE A ANCHOR ASSEMBLY REPLACEMENT

THERE ARE 3 LOCATIONS BETWEEN SLM 12.78 AND SLM 13.66 WHERE TYPE A ANCHOR ASSEMBLIES CURRENTLY EXIST ADJACENT TO SR 21. THE FOLLOWING ITEMS WILL BE USED TO REMOVE THE EXISTING ANCHOR ASSEMBLY, TYPE A AND 3 PANELS OF EXISTING GUARDRAIL AND INSTALL A NEW ANCHOR ASSEMBLY, TYPE E-98 AND 1 PANEL GUARDRAIL, TYPE 5 FOR EACH LOCATION:

- GUARDRAIL REMOVED, 62.5 FT
- BORROW, 2.5 CU YD
- GUARDRAIL, TYPE 5, 12.5 FT
- ANCHOR ASSEMBLY, TYPE E-98, 1 EACH
- BARRIER REFLECTOR, TYPE A, 2 EACH
- SEEDING AND MULCHING, 33 SQ YD

ALL MATERIALS, LABOR, EQUIPMENT, TOOLS, AND INCIDENTALS NECESSARY TO COMPLETE THIS WORK SHALL BE INCLUDED IN THE UNIT PRICE FOR THE PERTINENT BID ITEM. THE FOLLOWING QUANTITIES HAVE BEEN CARRIED TO THE GENERAL SUMMARY:

202, GUARDRAIL REMOVED	187.5 FEET
203, BORROW	7.5 CU YD
606, GUARDRAIL, TYPE 5	37.5 FEET
606, ANCHOR ASSEMBLY, TYPE E-98	3 EACH
626, BARRIER REFLECTOR, TYPE A	6 EACH
659, SEEDING AND MULCHING	99 SQ YD
659, COMMERCIAL FERTILIZER	0.01 TON
659, LIME	0.02 ACRES
659, WATER	1 M. GAL.

PROPOSED SIGN PROTECTION

THE PROPOSED SIGN AT SLM 9.61, SR 21 NORTHBOUND SHALL BE PROTECTED BY THE FOLLOWING BID ITEMS. GUARDRAIL OFFSET FROM THE PAVED SHOULDER IS 2'.

ALL MATERIALS, LABOR, EQUIPMENT, TOOLS, AND INCIDENTALS NECESSARY TO COMPLETE THIS WORK SHALL BE INCLUDED IN THE UNIT PRICE FOR THE PERTINENT BID ITEM. THE FOLLOWING QUANTITIES HAVE BEEN CARRIED TO THE GENERAL SUMMARY:

606, GUARDRAIL, TYPE 5	137.5 FEET
606, ANCHOR ASSEMBLY, TYPE E-98	1 EACH
606, ANCHOR ASSEMBLY, TYPE T	1 EACH
626, BARRIER REFLECTOR, TYPE A	3 EACH

DESIGNED RCB
DETAILED TJP

GENERAL NOTES

STA-21-8.25

I:\Projects\STA-21-8.25\Roadway\Sheets\STA2108NOT.dgn 28-FEB-2007 8:45AM anbaldwin

MAINTENANCE OF TRAFFIC

THIS ITEM SHALL CONSIST OF MAINTENANCE OF TRAFFIC ON EXISTING ROADWAYS AND RAMPS IN ACCORDANCE WITH THE OHIO MANUAL OF UNIFORM TRAFFIC CONTROL DEVICES FOR STREETS AND HIGHWAYS, CURRENT EDITION, LATEST REVISION, THE SPECIFICATIONS AND THE FOLLOWING:

1. SR-21: A MINIMUM OF ONE ELEVEN FOOT LANE IN EACH DIRECTION SHALL BE MAINTAINED ON THE EXISTING PAVEMENT OR COMPLETED PAVEMENT DURING CONSTRUCTION OF THE WORK.
RAMPS: A MINIMUM OF ONE TEN FOOT LANE SHALL BE MAINTAINED ON THE EXISTING PAVEMENT OR COMPLETED PAVEMENT DURING CONSTRUCTION OF THE WORK.

2. THE CONTRACTOR SHALL INFORM THE DISTRICT OFFICE (330) 786-2211, EIGHTEEN (18) DAYS PRIOR TO THE BEGINNING OF WORK.

3. CONES SHALL NOT BE ACCEPTABLE TRAFFIC CONTROL DEVICES FOR LANE RESTRICTIONS OR LANE REDUCTIONS THAT ARE IN OPERATION ONE-HALF HOUR AFTER SUNSET OR ONE HALF-HOUR BEFORE SUNRISE. ALL NIGHTTIME LANE RESTRICTIONS SHALL REQUIRE DRUMS OR BARRICADES AT A MAXIMUM SPACING OF FIFTY (50) FEET. WEIGHTED CHANNELIZERS MAY BE USED IN ACCORDANCE WITH THE ADDITIONAL NOTE HEREIN.

4. THE CONTRACTOR SHALL FURNISH, ERECT, MAINTAIN AND SUBSEQUENTLY REMOVE ALL FLAGS, BARRICADES, SIGNS, SIGN SUPPORTS AND FURNISH AND MAINTAIN ALL FLAGGERS, WATCHERS AND INCIDENTALS RELATED THERETO.

5. ALL FULL DEPTH PAVEMENT REMOVAL AND REPLACEMENT OPERATIONS SHALL BE COMPLETED THE SAME DAY THE EXCAVATION IS MADE.

6. THE CONTRACTOR SHALL PROVIDE ADEQUATE DRAINAGE OF THE MILLED SURFACES BY MILLING SLOTS IN THE OUTSIDE SHOULDER AS NEEDED.

7. TRAFFIC SHALL NOT BE MAINTAINED ON ANY MILLED SURFACE. THE LANE SHALL REMAIN CLOSED UNTIL THE RESURFACING IS COMPLETED.

8. UNDER NO CIRCUMSTANCES SHALL THE CONTRACTOR BE PERMITTED TO HAVE SUCCESSIVE WORK ZONES UNLESS THE DISTANCE BETWEEN THE DRUMS, BARRICADES OR CONES EXCEEDS ONE (1) MILE.

9. ONLY DURING OFF-PEAK PERIODS (ie ANY PERIOD OTHER THAN 6-8AM AND 3-6PM) SHALL THE CONTRACTOR INSTALL AND SUBSEQUENTLY RESET ALL TRAFFIC CONTROL NECESSARY FOR THE WORK ZONE FOR EACH CONSTRUCTION PHASE.

10. IN ADDITION TO THE REQUIREMENTS OF 614.11 WORK ZONE PAVEMENT MARKINGS, AT THE END OF EACH DAY OF WORK, THE CONTRACTOR SHALL REPLACE (WITH WORK ZONE MARKINGS) ALL LANE, STOP OR CHANNELIZING LINES THAT WERE REMOVED OR COVERED DURING THE PAVEMENT REMOVAL OR PLACEMENT OPERATIONS. QUANTITIES FOR SUCH PLACEMENT ARE CARRIED AS PART OF THE ITEMS LISTED UNDER 614 WORK ZONE PAVEMENT MARKINGS.

11. A QUANTITY OF 20 CU. YDS. OF 614 ASPHALT CONCRETE FOR MAINTAINING TRAFFIC SHALL BE PROVIDED FOR USE IN MAINTAINING PAVEMENT, SHOULDERS AND OTHER LOCATIONS AS DIRECTED BY THE ENGINEER.

12. PRIOR TO OPENING TO TRAFFIC EACH LANE SHALL BE IN A SAFE, PASSABLE CONDITION. ALL TRANSVERSE JOINTS SHALL EXTEND ACROSS THE FULLLANE AND SHOULDER WIDTH AND EACH LANE SHALL BE FREE FROM UNEVEN LONGITUDINAL JOINTS. THE CONTRACTOR SHALL PROVIDE ASPHALT WEDGES FOR TRANSVERSE JOINTS WHEREVER THERE ARE PAVEMENT ELEVATION DIFFERENCES.

13. A QUANTITY OF ITEM 614 WORK ZONE MARKING SIGN HAS BEEN INCLUDED IN THE PLAN. THIS QUANTITY SHALL INCLUDE, BUT NOT BE LIMITED TO, THE FOLLOWING SIGNS: W8-1 (BUMP), W8-H13 (NO EDGE LINES), W8-11 (UNEVEN LANES). THESE QUANTITIES SHALL BE AS PER 614.04.

THE FOLLOWING QUANTITIES SHALL BE USED FOR THE MAINTENANCE OF TRAFFIC ON THIS PROJECT:

PHASE 1 - INTERMEDIATE COURSE
- 614, WORK ZONE LANE LINE, CLASS II, 6.14 MILE
- 614, WORK ZONE STOP LINE, CLASS I, 66 FT
- 614, WORK ZONE CHANNELIZING LINE, CLASS I, 3592 FT
- 614, WORK ZONE MARKING SIGN (BOTH PHASES), 24 EACH

PHASE 2 - SURFACE COURSE
- 614, WORK ZONE LANE LINE, CLASS II, 6.14 MILE
- 614, WORK ZONE STOP LINE, CLASS I, 66 FT
- 614, WORK ZONE CHANNELIZING LINE, CLASS I, 3592 FT

TO BE USED AS DIRECTED BY THE ENGINEER
- 614, WORK ZONE EDGE LINE, CLASS I, 13.61 MILE

LANE CLOSURES

DURATION OF LANE CLOSURES AND RESTRICTIONS SHALL BE AS PER THE PERMITTED LANE CLOSURE CHART. THE PERMITTED LANE CLOSURE CHART USED FOR THIS PROJECT SHALL BE THE MOST CURRENT CHART AVAILABLE ON THE DATE THIS PROJECT SELLS.

THE CHART CAN BE FOUND AT:
https://dotaw100.dot.state.oh.us/plcm/plcm_web.jsp

SHOULD THE CONTRACTOR FAIL TO MEET ANY OF THE REQUIREMENTS IN THE CHART, THE CONTRACTOR SHALL BE ASSESSED LIQUIDATED DAMAGES IN THE AMOUNT OF $ 2000 PER HOUR OR PORTION THEREOF THAT THE LANE REDUCTION REMAINS BEYOND THE SPECIFIED LIMIT.

START AND INTERIM COMPLETION DATES

NO RESURFACING WORK SHALL BEGIN ON THIS PROJECT UNTIL JULY 1, 2008.

ALL WORK, EXCEPT FOR THE SIGNING, SHALL BE COMPLETED BY OCTOBER 15, 2008.

WINTER TRAFFIC LIMITATIONS

ALL EXISTING LANES SHALL BE OPEN TO TRAFFIC BETWEEN NOVEMBER 15 AND APRIL 1. NOVEMBER 14 SHALL BE CONSIDERED TO CONSTITUTE AN INTERIM COMPLETION DATE AND LIQUIDATED DAMAGES AS SPECIFIED IN 108.07 SHALL BE ASSESSED FOR EACH CALENDAR DAY THAT THE ROADWAY REMAINS CLOSED TO TRAFFIC BEYOND THE SPECIFIED LIMIT. THE CONTRACTOR MAY CLOSE LANES PRIOR TO APRIL 1 WITH WRITTEN APPROVAL FROM THE DISTRICT CONSTRUCTION ENGINEER.

TRAFFIC CONTROL INSPECTOR

THE CONTRACTOR SHALL DESIGNATE AN INDIVIDUAL OTHER THAN THE SUPERINTENDENT AND SUBJECT TO THE APPROVAL OF THE ENGINEER, TO CONTINUOUSLY INSPECT ALL TRAFFIC CONTROL DEVICES WHENEVER CONSTRUCTION WORK IS BEING PERFORMED WITHIN THE WORK LIMITS OF THE PROJECT. THE DESIGNATED INDIVIDUAL SHALL ALSO INSPECT ALL TRAFFIC DEVICES AT THE BEGINNING AND AT THE END OF EACH WORK DAY. THE DESIGNATED INDIVIDUAL OR A QUALIFIED REPRESENTATIVE SHALL ALSO BE AVAILABLE ON AN AROUND THE CLOCK BASIS TO REPAIR AND/OR REPLACE DAMAGED OR MISSING TRAFFIC CONTROL DEVICES. THESE INDIVIDUALS SHALL BE EQUIPPED WITH CELLULAR PHONES AND THEIR NAMES AND PHONE NUMBERS SHALL BE GIVEN TO THE PROJECT ENGINEER AT THE PRE-CONSTRUCTION MEETING. THE DESIGNATED INDIVIDUAL MAY HAVE OTHER CONSTRUCTION RELATED DUTIES AS LONG AS IMMEDIATE ATTENTION IS GIVEN TO TRAFFIC CONTROL. PAYMENT FOR THE SERVICES OF THE TRAFFIC CONTROL INSPECTOR SHALL BE INCLUDED IN THE LUMP SUM PRICE BID FOR ITEM 614 MAINTAINING TRAFFIC.

ITEM 632 - DETECTOR LOOP, AS PER PLAN

THE CONTRACTOR SHALL CONTACT THE DISTRICT OFFICE (330-786-3146) THREE WORKING DAYS PRIOR TO ANY PLANING OR TRENCHING AT THE INTERSECTIONS LISTED BELOW. LOOP DETECTORS DISTURBED BY PAVEMENT PLANING OR TRENCHING SHALL BE ABANDONED IN PLACE. THE LOOP DETECTOR WIRE WILL BE CUT INTO THE PAVEMENT AFTER THE PROPOSED SURFACE COURSE HAS BEEN PLACED. EACH DETECTOR SHALL BE REPLACED IN KIND, AT THE SAME LOCATION AS EXISTING. THE QUANTITIES LISTED BELOW HAVE BEEN CARRIED TO THE GENERAL SUMMARY. THE NEW LOOP DETECTOR WIRES SHALL BE RUN INTO THE EXISTING CONTROL BOX OR THE EXISTING PULLBOX. INCLUDED IN THIS ITEM IS THE POURED EPOXY TYPE CABLE SPLICE KIT (CONFORMING TO 725.15E) THAT MUST BE USED IN MAKING THESE CONNECTIONS.

ALL NECESSARY MATERIAL, LABOR, SPLICE KITS AND EQUIPMENT SHALL BE INCIDENTAL TO PAYMENT OF THESE ITEMS.
632 DETECTOR LOOP, AS PER PLAN, 3 EACH

ERIE ST. / RAMP B
1 EACH, 6' X 30'

ERIE ST. / RAMP H
2 EACH, 6' X 50'

ITEM 614 - LAW ENFORCEMENT OFFICER WITH PATROL CAR

IN ADDITION TO THE REQUIREMENTS OF 614 AND THE LATEST EDITION OF THE OHIO MANUAL OF UNIFORM TRAFFIC CONTROL DEVICES (OMUTCD). A UNIFORMED LAW ENFORCEMENT OFFICER AND OFFICIAL PATROL CAR WITH WORKING TOP MOUNTED EMERGENCY FLASHING LIGHTS SHALL BE PROVIDED FOR CONTROLLING TRAFFIC AS DIRECTED BY ENGINEER FOR THE FOLLOWING TASKS:

1. FOR LANE CLOSURES: DURING INITIAL SET-UP PERIODS, TEAR DOWN PERIODS, SUBSTANTIAL SHIFTS OF A CLOSURE POINT OR WHEN NEW LANE CLOSURE ARRANGEMENTS ARE INITIATED.

LAW ENFORCEMENT OFFICERS (L.E.O.'S) SHOULD NOT BE USED WHERE THE OMUTCD INTENDS THAT FLAGGERS BE USED. THE LEO'S ARE CONSIDERED TO BE EMPLOYED BY THE CONTRACTOR AND THE CONTRACTOR SHALL BE RESPONSIBLE FOR THEIR ACTIONS. ALTHOUGH THEY ARE EMPLOYED BY THE CONTRACTOR, THE PROJECT ENGINEER SHALL HAVE CONTROL OVER THEIR PLACEMENT. THE OFFICIAL PATROL CAR SHALL BE A PUBLIC SAFETY VEHICLE AS REQUIRED BY THE OHIO REVISED CODE.

THE CONTRACTOR SHALL MAKE ARRANGEMENTS FOR THESE SERVICES WITH:

Canton Patrol Post
4710 Shuffel Road
North Canton, OH 44720
phone: (330) 433-6200

IF AFTER CONTACTING THE OHIO HIGHWAY PATROL, IT IS DETERMINED THAT THEY CANNOT SUPPLY THE LEO, THEN AN AUTHORIZED MUNICIPAL OR COUNTY POLICE OFFICER WITH A MARKED AND FLASHER-LIGHT EQUIPPED OFFICIAL POLICE OR PATROL CAR SHALL BE PROVIDED.

LAW ENFORCEMENT OFFICERS WITH PATROL CAR REQUIRED BY THE TRAFFIC MAINTENANCE TASKS ABOVE SHALL BE PAID FOR ON A UNIT PRICE (HOURLY) BASIS UNDER ITEM 614 LAW ENFORCEMENT OFFICER WITH PATROL CAR. THE FOLLOWING ESTIMATED QUANTITIES HAVE BEEN CARRIED TO THE GENERAL SUMMARY:
- 614, LAW ENFORCEMENT OFFICER WITH PATROL CAR, 480 HOURS

THE HOURS PAID SHALL INCLUDE MINIMUM SHOW-UP TIME REQUIRED BY THE LAW ENFORCEMENT AGENCY INVOLVED.

IF THE CONTRACTOR WISHES TO UTILIZE LEO'S FOR FLAGGING AND TRAFFIC CONTROL OTHER THAN FOR THAT REQUIRED IN THESE PLANS, HE MAY DO SO AT THIS OWN EXPENSE. PAYMENT FOR THE EXCESS ABOVE THE CONTRACT REQUIREMENTS WILL BE INCLUDED UNDER ITEM 614 MAINTAINING TRAFFIC.

ADVANCED NOTICE TO PAVE

THE CONTRACTOR SHALL SUBMIT FOR APPROVAL TO THE DISTRICT CONSTRUCTION ENGINEER A DETAILED SCHEDULE 15 DAYS PRIOR TO THE PLACEMENT OF THE OVERLAY COURSES, ON HOW THEY PROPOSE TO PROSECUTE THE PAVING OPERATIONS. THE DETAILS SHALL SHOW THE ORDER OF PERFORMANCE OF EACH STAGE (START TO FINISH) OF THE WORK INCLUDING THE MAINTENANCE OF TRAFFIC THAT WILL BE USED.

PROJECTS\STA_21-8.25 MAINTENANCE OF TRAFFIC GENERAL NOTES.DWG 08-FEB-2007 9:47AM thoughtful

ITEM 614 - PORTABLE CHANGEABLE MESSAGE SIGN, AS PER PLAN

THE CONTRACTOR SHALL FURNISH, INSTALL, MAINTAIN AND REMOVE, WHEN NO LONGER NEEDED, 2 PORTABLE CHANGEABLE MESSAGE SIGNS (PCMS), ON SITE, FOR THE DURATION OF TIME SPECIFIED IN THIS NOTE, EACH SIGN SHALL BE OF A TYPE SHOWN ON A LIST OF APPROVED PCMS UNITS MAINTAINED BY THE DIRECTOR. THIS LIST IS AVAILABLE ON THE ODOT WEBSITE AT HTTP://WWW.DOT.STATE.OH.US/TESTLAB/APPLISTS/MISC/PCMS.HTM THE CLASS I UNITS SHALL HAVE A MINIMUM LEGIBILITY DISTANCE OF 1250 FEET.

EACH SIGN SHALL BE TRAILER MOUNTED AND EQUIPPED WITH A FUNCTIONAL DIMMING MECHANISM TO DIM THE SIGN DURING DARKNESS AND A TAMPER AND VANDAL PROOF ENCLOSURE. EACH SIGN SHALL BE PROVIDED WITH APPROPRIATE TRAINING AND OPERATION INSTRUCTIONS TO ENABLE ON-SITE PERSONNEL TO OPERATE AND TROUBLESHOOT THE UNIT. THE SIGN SHALL ALSO BE CAPABLE OF BEING POWERED BY AN ELECTRICAL SERVICE DROP FROM A LOCAL UTILITY COMPANY. PCMS TRAILERS SHOULD BE DELINEATED ON A PERMANENT BASIS BY AFFIXING RETROREFLECTIVE MATERIAL, IN A CONTINUOUS LINE ON THE FACE OF THE TRAILER AS SEEN BY ONCOMING ROAD USERS.

PLACEMENT, OPERATION, MAINTENANCE AND ALL ACTIVATION OF THE SIGNS BY THE CONTRACTOR SHALL BE AS DIRECTED BY THE ENGINEER. THE PCMS SHALL BE LOCATED IN A HIGHLY VISIBLE POSITION YET PROTECTED FROM TRAFFIC. THE PCMS SHOULD NOT BE LOCATED IN THE MEDIAN OF THE HIGHWAY UNLESS IT IS PROTECTED FROM BOTH DIRECTIONS OF TRAFFIC. THE PCMS SHOULD BE LOCATED BEHIND GUARDRAIL WHEREVER POSSIBLE. THE CONTRACTOR SHALL, AT THE DIRECTION OF THE ENGINEER, RELOCATE THE PCMS TO IMPROVE THE VISIBILITY OR ACCOMMODATE CHANGED CONDITIONS. WHEN NOT IN USE, THE PCMS WILL BE OFF, FACING AWAY FROM ALL TRAFFIC AND SHALL DISPLAY ONE OR MORE HIGH INTENSITY YELLOW REFLECTIVE SHEETING SURFACES OF 9-INCH BY 15-INCH MINIMUM SIZE FACING TRAFFIC.

THE ENGINEER SHALL BE PROVIDED ACCESS TO EACH SIGN UNIT AND SHALL BE PROVIDED WITH APPROPRIATE TRAINING AND OPERATION INSTRUCTIONS TO ENABLE PERSONNEL TO OPERATE AND TROUBLESHOOT THE UNIT AND TO REVISE SIGN MESSAGES, IF NECESSARY.

ALL MESSAGES TO BE DISPLAYED ON THE SIGN WILL BE PROVIDED BY THE CONTRACTOR. A LIST OF ALL PROPOSED PREPROGRAMMED MESSAGES WILL BE GIVEN TO THE ENGINEER PRIOR TO CONSTRUCTION. THE SIGN SHALL HAVE TWO DIFFERENT MEMORIES (PROM AND RAM) AND CAPABILITY TO STORE UP TO 99 MESSAGES IN EACH MEMORY. MESSAGE MEMORY OR PREPROGRAMMED DISPLAYS SHALL NOT BE LOST AS A RESULT OF POWER FAILURES TO THE ON-BOARD COMPUTER. THE SIGN LEGEND SHALL BE CAPABLE OF BEING CHANGED IN THE FIELD. IN ORDER TO CONVEY A MAXIMUM OF INFORMATION AT A SINGLE GLANCE, ONLY THREE LINE PRESENTATION FORMATS WITH A MAXIMUM OF SIX MESSAGE PHASES WILL BE PERMITTED. NORMALLY, ONLY A MAXIMUM OF THREE MESSAGE PHASES SHOULD BE EMPLOYED. PCMS FORMAT SHALL PERMIT THE COMPLETE MESSAGE FOR EACH PHASE TO BE READ AT LEAST ONCE.

THE PCMS SHALL CONTAIN AN ACCURATE CLOCK AND PROGRAMMING LOGIC WHICH WILL ALLOW THE SIGN TO BE ACTIVATED, DE-ACTIVATED OR MESSAGES CHANGED AUTOMATICALLY AT DIFFERENT TIMES OF THE DAY FOR DIFFERENT DAYS OF THE WEEK.

THE PCMS SHALL CONTAIN A CELLULAR TELEPHONE DATA LINK WHICH WILL (IN ACTIVE CELLULAR AREAS) ALLOW REMOTE SIGN ACTIVATION, DEACTIVATION, MESSAGE CHANGES, MESSAGE ADDITIONS AND REVISIONS TO TIME OF DAY PROGRAMS. THE SYSTEM SHALL ALSO PERMIT VERIFICATION OF CURRENT AND PROGRAMMED MESSAGES.

THE PCMS UNIT SHALL BE MAINTAINED IN GOOD WORKING ORDER BY THE CONTRACTOR IN ACCORDANCE WITH THE PROVISIONS OF 614. THE CONTRACTOR SHALL PRIOR TO ACTIVATING THE UNIT, MAKE ARRANGEMENTS WITH AN AUTHORIZED SERVICE AGENT FOR THE PCMS TO ASSURE PROMPT SERVICE IN THE EVENT OF FAILURE. ANY FAILURE SHALL NOT RESULT IN THE SIGN BEING OUT OF SERVICE FOR MORE THAN 12 HOURS INCLUDING WEEKENDS. FAILURE TO COMPLY MAY RESULT IN AN ORDER TO STOP WORK AND OPEN ALL TRAFFIC LANES AND/OR IN THE DEPARTMENT TAKING APPROPRIATE ACTION TO SAFELY CONTROL TRAFFIC AND THE ENTIRE COST TO CONTROL TRAFFIC ACCRUED BY THE DEPARTMENT WILL BE DEDUCTED FROM MONEYS DUE, OR TO BECOME DUE THE CONTRACTOR ON HIS CONTRACT.

THE CONTRACTOR SHALL BE RESPONSIBLE FOR 24 HOURS PER DAY OPERATION AND MAINTENANCE OF THESE SIGNS ON THE PROJECT FOR THE DURATION OF THE PHASES. THE REQUIREMENT TO FURNISH, INSTALL, MAINTAIN AND REMOVE A PCMS UNIT ON THIS PROJECT SHALL NOT IN ANY WAY RELIEVE THE CONTRACTOR OF HIS RESPONSIBILITIES AS OUTLINED IN 614.02.

PAYMENT FOR THE ABOVE DESCRIBED ITEM SHALL BE AT THE CONTRACT UNIT PRICE BID FOR EACH SIGN MONTH OF ITEM 614 PORTABLE CHANGEABLE MESSAGE SIGN, AS PER PLAN AND SHALL INCLUDE ALL LABOR, MATERIALS, EQUIPMENT, FUELS, LUBRICATING OILS, SOFTWARE, HARDWARE AND INCIDENTALS TO PERFORM THE ABOVE DESCRIBED WORK.

614 PORTABLE CHANGEABLE MESSAGE SIGN, AS PER PLAN, 8 SIGN MONTH

CONTRACTOR'S EQUIPMENT - OPERATION AND STORAGE

A QUALIFIED FLAGGER SHALL BE EMPLOYED WHERE THE CONTRACTOR'S EQUIPMENT MUST MERGE WITH THE TRAFFIC STREAM. THE CONTRACTOR'S EQUIPMENT SHALL BE EQUIPPED WITH AT LEAST ONE AMBER FLASHING LIGHT. PAVERS, ROLLERS AND OTHER EQUIPMENT MAY BE PARKED IN AREAS ALONG THE HIGHWAY WHEN PAVING OPERATIONS ARE SCHEDULED TO CONTINUE WITHIN THE NEXT WORKDAY. OTHERWISE THE EQUIPMENT SHALL BE STORED AT A STORAGE AREA OUTSIDE THE R/W, THE LOCATION OF WHICH SHALL HAVE PRIOR APPROVAL OF THE ENGINEER. WHEN PARKING ALONG THE HIGHWAY THE EQUIPMENT SHALL BE PLACED AND DELINEATED AS PER 614.03. NO EQUIPMENT SHALL BE PARKED IN THE MEDIAN OF THE HIGHWAY. ADEQUATE BARRICADES AND LIGHTS SHALL BE PLACED ON THE PAVEMENT SIDE OF THE EQUIPMENT TO IDENTIFY THE LIMITS OF THE EQUIPMENT. ALL OTHER EQUIPMENT, INCLUDING PRIVATE VEHICLES, SHALL BE STORED AT THE APPROVED CONTRACTOR'S STORAGE AREA. NO EQUIPMENT SHALL BE PARKED ON PRIVATE PROPERTY UNLESS PRIOR APPROVAL OF THE OWNER AND THE PROJECT ENGINEER/SUPERVISOR HAS BEEN GRANTED.

ITEM 614, MAINTAINING TRAFFIC (LANES OPEN DURING HOLIDAYS OR SPECIAL EVENTS)

NO WORK SHALL BE PERFORMED AND ALL EXISTING LANES SHALL BE OPEN TO TRAFFIC DURING THE FOLLOWING DESIGNATED HOLIDAYS OR EVENTS:

CHRISTMAS	FOURTH OF JULY
NEW YEARS	LABOR DAY
MEMORIAL DAY	THANKSGIVING

THE PERIOD OF TIME THAT THE LANES ARE TO BE OPEN DEPENDS ON THE DAY OF THE WEEK ON WHICH THE HOLIDAY OR EVENT FALLS. THE FOLLOWING SCHEDULE SHALL BE USED TO DETERMINE THIS PERIOD:

DAY OF THE WEEK	TIME ALL LANES MUST BE OPEN TO TRAFFIC
SUNDAY	12:00N FRIDAY THROUGH 6:00 AM MONDAY
MONDAY	12:00N FRIDAY THROUGH 6:00 AM TUESDAY
TUESDAY	12:00N MONDAY THROUGH 6:00 AM WEDNESDAY
WEDNESDAY	12:00N TUESDAY THROUGH 6:00 AM THURSDAY
THURSDAY	12:00N WEDNESDAY THROUGH 6:00 AM MONDAY
FRIDAY	12:00N THURSDAY THROUGH 6:00 AM MONDAY
SATURDAY	12:00N FRIDAY THROUGH 6:00 AM MONDAY

NO EXTENSIONS OF TIME SHALL BE GRANTED FOR DELAYS IN MATERIAL DELIVERIES, UNLESS SUCH DELAYS ARE INDUSTRY-WIDE, OR FOR LABOR STRIKES, UNLESS SUCH STRIKES ARE AREA-WIDE.

SHOULD THE CONTRACTOR FAIL TO MEET ANY OF THESE REQUIREMENTS, THE CONTRACTOR SHALL BE ASSESSED LIQUIDATED DAMAGES IN ACCORDANCE WITH CMS 108.07.

CONCRETE MEDIAN BARRIER REPLACEMENT

REMOVING, GRADING AND INSTALLING THE REPLACEMENT BARRIER IN A CONTINUOUS OPERATION SHALL BE LIMITED TO 500 LINEAR FEET AND SHALL AT ALL TIMES BE SUBJECT TO THE APPROVAL OF THE ENGINEER. THE ENGINEER SHALL BE SATISFIED THAT ALL INSTALLATIONS WILL AFFORD MAXIMUM PROTECTION FOR TRAFFIC.

WEIGHTED CHANNELIZERS

THE WEIGHTED CHANNELIZER SHALL BE PREDOMINATELY ORANGE IN COLOR AND SHALL BE MADE OF A LIGHTWEIGHT, FLEXIBLE, AND DEFORMABLE MATERIAL. THEY SHALL BE AT LEAST 42 INCHES IN HEIGHT WITH A WEIGHTED BASE. THEY MAY HAVE A "HANDLE" OR LIFTING DEVICE WHICH EXTENDS ABOVE THE 42 INCH MINIMUM HEIGHT.

THE MARKINGS ON THE WEIGHTED CHANNELIZER SHALL BE HORIZONTAL, CIRCUMFERENTIAL, ALTERNATING ORANGE AND WHITE RETROREFLECTIVE STRIPES 6 INCHES WIDE. EACH WEIGHTED CHANNELIZER SHALL HAVE A MINIMUM OF TWO ORANGE AND TWO WHITE STRIPES. ANY NON-RETROREFLECTIVE SPACES BETWEEN THE HORIZONTAL ORANGE AND WHITE STRIPES SHALL NOT EXCEED 2 INCHES WIDE. THE WEIGHTED CHANNELIZER SHALL HAVE A 4-INCH MINIMUM WIDTH, REGARDLESS OF ORIENTATION.

ON FREEWAYS AND MULTILANE HIGHWAYS:
USE OF WEIGHTED CHANNELIZERS ON FREEWAYS AND MULTILANE HIGHWAYS SHALL BE LIMITED TO SHORT-TERM OPERATION, GENERALLY TWELVE HOURS OR LESS, FOR EITHER DAY OR NIGHT. UPON COMPLETION OF WORK WITHIN THE ABOVE NOTED TIME PERIOD, THE WEIGHTED CHANNELIZERS SHALL BE REMOVED. THE WEIGHTED CHANNELIZERS MAY AGAIN BE PLACED ON THE HIGHWAY WHEN THE WORK IS TO RESUME ON THE FOLLOWING DAY OR NIGHT. ANY LANE CLOSURE USING CHANNELIZATION DEVICES, EXPECTED TO REMAIN FOR MORE THAN TWELVE HOURS, SHALL REQUIRE THE USE OF DRUMS OR BARRIERS.

WHEN USED AT NIGHT, WEIGHTED CHANNELIZERS SHALL ONLY BE PLACED IN THE "TANGENT AREA". THE "TANGENT AREA" IS DEFINED AS THE AREA AFTER THE TRANSITION TAPER WHERE THE WORK TAKES PLACE. DRUMS SHALL BE USED IN THE TRANSITION TAPERS FOR NIGHT OPERATIONS.

ON OTHER HIGHWAYS:
THERE ARE NO DURATIONS OF WORK RESTRICTIONS FOR USE OF WEIGHTED CHANNELIZERS ON ALL OTHER TYPES OF HIGHWAYS, DAY OR NIGHT. ON THESE ROADWAYS THE WEIGHTED CHANNELIZER MAY BE USED IN THE TRANSITION TAPERS AS WELL AS IN THE TANGENT AREAS, DAY OR NIGHT.

MAXIMUM SPACING OF THE WEIGHTED CHANNELIZER SHALL BE 40 FEET.

STEPS SHOULD BE TAKEN TO ENSURE THAT THE WEIGHTED CHANNELIZERS WILL NOT BE BLOWN OVER OR DISPLACED BY WIND OR MOVING TRAFFIC. BALLASTS SHOULD NOT PRESENT A HAZARD IF THE WEIGHTED CHANNELIZERS ARE INADVERTENTLY STRUCK, NOR SHOULD THEY AFFECT THE VISIBILITY OF THE WEIGHTED CHANNELIZERS. ALL BALLASTS USED SHOULD BE IN ACCORDANCE WITH THE MANUFACTURER'S SPECIFICATIONS.

GENERAL NOTES

1. It is intended that this drawing be used for treatment of drop-offs that develop during construction operations, and that are not otherwise provided for in the construction plans. Where the plans do not provide specific items for labor, equipment, or materials to implement the drop-off treatments specified herein, they shall be included for payment in the lump sum bid for Item 614 - Maintaining Traffic.

2. While the need for certain advisory signing is noted herein, it is not intended that this be indicative of all signing that may be required to advise or warn motorist, and all requirements of the Ohio Manual of Uniform Traffic Control Devices (OMUTCD) must be fulfilled.

3. In urban or otherwise heavily developed areas where pedestrians and/or bicyclists may be present in significant numbers, additional signing and protective measures other than those shown herein may be required.

4. The drop-off treatment selected for use at any given location shall be appropriate for the prevailing conditions at the site.

5. Where concrete barrier is specified, it shall be in accordance with Standard Construction Drawing PCB - 91, RM-4.2 and Item 622.

6. When drums are specified for a drop-off condition, a minimum number of four drums shall be used. Spacing shall be as indicated in the plans or as specified in the OMUTCD.

7. When W8-9 (Low Shoulder) signs or W8-11 (Uneven Lanes) and R4-9 (Stay in Lane) signs are required, they shall be placed 750' in advance of the condition, on all intersecting entrance ramps within the limits of the condition and immediately beyond all intersecting roadways within the limits of the condition. When the drop-off condition extends more than one-half mile, additional signs shall be erected at intervals of a maximum of one mile.

8. For locations, such as at ramps, lane shifts, lane closures, etc., where traffic is required to negotiate any difference in elevation between pavements, the Optional Wedge Treatment shall be provided.

9. Portable concrete barrier shall be placed on the same level as the traffic surface and shall not encroach on lane width(s) designated as the minimum required for traffic use. Where drums are used, and their presence would reduce traveled lane widths to less than 10', drums may be placed on the opposite level from that of traffic provided the drop-off depth does not exceed 5" and approval is granted by the Project Engineer.

10. Pavement Repairs (or similar work):

   a. Lengths greater than 60 feet - utilize appropriate treatment from Condition I.

   b. Lengths of 60 feet or less - repairs shall be affected in accordance with Item 255.08. Drums may be used as a separator adjacent to the traveled lane.

CONDITION I

1. These treatments are to be used for resurfacing, pavement planing excavation, etc., between, beside or within traveled lanes.

Distance From Traveled Lane	D (in)	Treatment
1FT-12FT	≤ 1½	Erect W8-11.
1FT-12FT	1½-3	1. Lane closure utilizing drums* as shown below. (use only on 3 or more lanes) - or - 2. Optional Wedge Treatment.
1FT-12FT	3 - 5	Lane closure utilizing drums as shown below
1FT-12FT	5 - 12	Lane closure utilizing portable concrete barrier as shown below.
>12FT-20FT	12 - 24	Lane closure utilizing drums as shown below
>12FT-20FT	>24	Lane closure utilizing portable concrete barrier as shown below.

*Cones may be used for daytime only conditions.

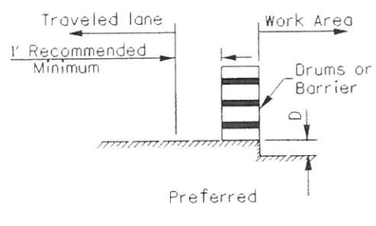

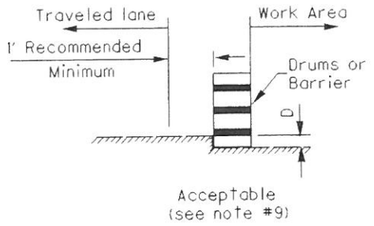

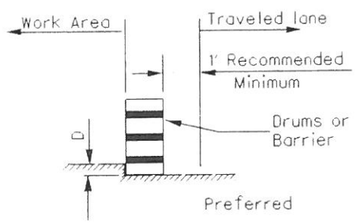

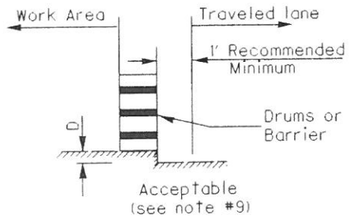

OPTIONAL WEDGE TREATMENT

(MILLING OR RESURFACING)

1. This treatment may be used when permitted for Condition I only.

2. W8-11 and R4-9 signs required.

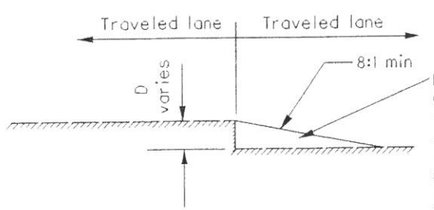

Firm and unyielding material (to be removed prior to placing the abutting pavement course) All labor, equipment, materials, and incidentals to provide and subsequently remove the pavement wedge shall be included and paid under the lump sum bid for Item 614- Maintaining Traffic

CONDITION II

DROPOFFS WITHIN GRADED SHOULDER AREA
(except for linear grading areas)

The treatments indicated below are for use in conjunction with resurfacing, planing, or excavation within the graded shoulder area.

Distance From Traveled Lane	D (in)	Treatment
1FT-12FT	≤ 1½	1.) If edgelines are present, no treatment necessary. or 2.) Erect W8-11 and R4-9 signs
1FT-12FT	1½- 5	1) If min. lane widths* requirements can be met, maintain lanes utilizing drums as shown below. - or - 2) If min. lane width* requirements cannot be met, close adjacent lane utilizing drums. (use only on 3 or more lanes) - or - 3) Optional shoulder treatment
>12FT-30FT	<= 24	Shoulder closure utilizing drums as shown below
>12FT-30FT	>24	Shoulder closure utilizing portable concrete barrier as shown below.

*Minimum lane widths shall be 10' unless otherwise specified in the plans.

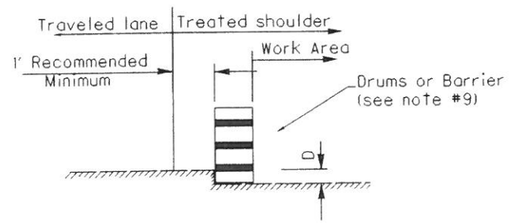

OPTIONAL SHOULDER TREATMENT

1. This treatment shall not be used within a bituminous shoulder where a hot longitudinal joint per 401.17 is required.

2. W8-9 signs required.

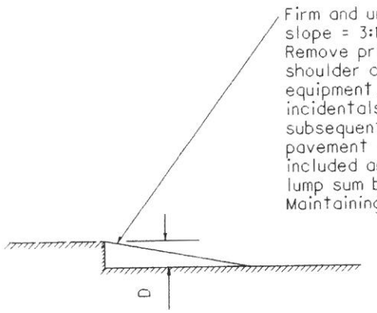

Firm and unyielding material slope = 3:1 or flatter. Remove prior to placing the shoulder course. All labor, equipment, materials and incidentals to provide and subsequently remove the pavement wedge shall be included and paid under the lump sum bid for item 614 - Maintaining Traffic.

DROPOFFS IN WORK ZONES

STA-21-8.25

SHEET NUMBER														ITEM	ITEM EXT.	GRAND TOTAL	UNIT	DESCRIPTION	SEE SHEET NO.
								4	5	10	15	21	22						
																		ROADWAY	
														201	11000	LUMP		CLEARING AND GRUBBING	
								60						202	30700	60	FT	CONCRETE BARRIER REMOVED	
								187.5						202	38000	187.5	FT	GUARDRAIL REMOVED	
												120		202	54000	120	EACH	RAISED PAVEMENT MARKER REMOVED	
								1						202	58200	1	EACH	INLET REMOVED	
								537						203	10000	537	CU YD	EXCAVATION	
								8						203	40000	8	CU YD	BORROW	
								175						606	13000	175	FT	GUARDRAIL, TYPE 5	
								4						606	22010	4	EACH	ANCHOR ASSEMBLY, TYPE E-98	
								1						606	26500	1	EACH	ANCHOR ASSEMBLY, TYPE T	
								60						622	90000	60	FT	BARRIER, MISC.: CONCRETE BARRIER	
								4						SPEC	69098000	4	EACH	MISC.: VERTICAL CLEARANCE	4
													0.5	SPEC	69099000	0.5	ACRE	MISC.: CLEARING AND GRUBBING	22
																		EROSION CONTROL	
								99						659	10000	99	SQ YD	SEEDING AND MULCHING	
								0.01						659	20000	0.01	TON	COMMERCIAL FERTILIZER	
								0.02						659	31000	0.02	ACRE	LIME	
								1						659	35000	1	M GAL	WATER	
																		DRAINAGE	
								1						604	14501	1	EACH	INLET, NO. 3A, AS PER PLAN	4
																		PAVEMENT	
								5370						251	01000	5370	SQ YD	PARTIAL DEPTH PAVEMENT REPAIR	
										155450				254	01001	155450	SQ YD	PAVEMENT PLANING, ASPHALT CONCRETE, AS PER PLAN	3
								3222						255	10100	3222	SQ YD	FULL DEPTH PAVEMENT REMOVAL AND RIGID REPLACEMENT, CLASS FS	
								9666						255	20000	9666	FT	FULL DEPTH PAVEMENT SAWING	
								537						304	20000	537	CU YD	AGGREGATE BASE	
										23318				407	13900	23318	GALLON	TACK COAT, 702 13	
										5299				407	14000	5299	GALLON	TACK COAT FOR INTERMEDIATE COURSE	
										4428				408	10001	4428	GALLON	PRIME COAT, AS PER PLAN	3
										34977				409	30000	34977	FT	SAWING AND SEALING ASPHALT CONCRETE PAVEMENT JOINTS	
										6478				442	10051	6478	CU YD	ASPHALT CONCRETE SURFACE COURSE, 12.5 MM, TYPE B (446), AS PER PLAN	3
										7359				442	10150	7359	CU YD	ASPHALT CONCRETE INTERMEDIATE COURSE, 19MM, TYPE B (446)	
										615				617	10101	615	CU YD	COMPACTED AGGREGATE, AS PER PLAN	3
																		TRAFFIC CONTROL	
								9						626	00100	9	EACH	BARRIER REFLECTOR, TYPE A	
									3					632	26501	3	EACH	DETECTOR LOOP, AS PER PLAN	5
											5.12			642	00100	5.12	MILE	EDGE LINE, TYPE 1	
											4.38			642	00200	4.38	MILE	LANE LINE, TYPE 1	
											0.03			642	00290	0.03	MILE	CENTER LINE	
											3592			642	00402	3592	FT	CHANNELIZING LINE, TYPE 2	
											66			642	00502	66	FT	STOP LINE, TYPE 2	
											2137			642	00702	2137	FT	TRANSVERSE/DIAGONAL LINE, TYPE 2	
											7			642	01302	7	EACH	LANE ARROW, TYPE 2	
											1.76			644	00100	1.76	MILE	EDGE LINE	
											1.76			644	00200	1.76	MILE	LANE LINE	

CALCULATED: RCB
CHECKED: TJP

GENERAL SUMMARY

STA-21-8.25

N:\Projects\STA\2435\roadway\sheets\2435roa001.dgn 28-FEB-2007 1:35PM pbaugama

SHEET NUMBER														ITEM	ITEM EXT.	GRAND TOTAL	UNIT	DESCRIPTION	SEE SHEET NO.
									5	6	21	22	28						
																		TRAFFIC CONTROL	
											120			621	10020	120	EACH	RPM, LOW PROFILE WHITE/RED	
													2	625	32000	2	EACH	GROUND ROD	
													708	630	03100	708	FT	GROUND MOUNTED SUPPORT, NO. 3 POST	
													101	630	07000	101	FT	GROUND MOUNTED SUPPORT, W8X18 BEAM	
													57	630	07500	57	FT	GROUND MOUNTED SUPPORT, W10X22 BEAM	
													47	630	07600	47	FT	GROUND MOUNTED SUPPORT, W10X12 BEAM	
													8	630	09000	8	EACH	BREAKAWAY BEAM CONNECTION	
													1	630	20500	1	EACH	OVERHEAD SIGN SUPPORT, TYPE TC-12.30, DESIGN 5	
													1	630	20800	1	EACH	OVERHEAD SIGN SUPPORT, TYPE TC-12.30, DESIGN 8	
													33	630	75000	33	EACH	SIGN ATTACHMENT ASSEMBLY	
													7	630	79500	7	EACH	SIGN SUPPORT ASSEMBLY, POLE MOUNTED	
													661	630	80100	661	SQ FT	SIGN, FLAT SHEET	
													387	630	80200	387	SQ FT	SIGN, GROUND MOUNTED EXTRUSHEET	
													1682	630	80224	1682	SQ FT	SIGN, OVERHEAD EXTRUSHEET	
													8	630	84500	8	EACH	GROUND MOUNTED BEAM SUPPORT FOUNDATION	
													2	630	84510	2	EACH	RIGID OVERHEAD SIGN SUPPORT FOUNDATION	
													129	630	84900	129	EACH	REMOVAL OF GROUND MOUNTED SIGN AND DISPOSAL	
													4	630	85400	4	EACH	REMOVAL OF GROUND MOUNTED MAJOR SIGN AND DISPOSAL	
													48	630	86002	48	EACH	REMOVAL OF GROUND MOUNTED POST SUPPORT AND DISPOSAL	
													8	630	86102	8	EACH	REMOVAL OF GROUND MOUNTED BEAM SUPPORT AND DISPOSAL	
													14	630	87400	14	EACH	REMOVAL OF OVERHEAD MOUNTED SIGN AND DISPOSAL	
													5	630	87500	5	EACH	REMOVAL OF POLE MOUNTED SIGN AND DISPOSAL	
													2	630	89706	2	EACH	REMOVAL OF OVERHEAD SIGN SUPPORT AND DISPOSAL, TYPE TC-12.30	
												10		630	89902	10	EACH	REMOVAL OF MISCELLANEOUS TRAFFIC CONTROL ITEM, BEAM SUPPORT FOUNDATION	22
													6	631	94200	6	EACH	REMOVAL OF LUMINAIRE AND DISPOSAL	
													2	631	94304	2	EACH	REMOVAL OF DISCONNECT SWITCH AND DISPOSAL	
													4	631	94404	4	EACH	REMOVAL OF BALLAST AND DISPOSAL	
													2	631	94408	2	EACH	REMOVAL OF SIGN WIRING AND DISPOSAL	
													1	631	94412	1	EACH	REMOVAL OF SIGN SERVICE AND DISPOSAL	
																		MAINTENANCE OF TRAFFIC	
									480					614	11100	480	HOUR	LAW ENFORCEMENT OFFICER WITH PATROL CAR	
									24					614	12460	24	EACH	WORK ZONE MARKING SIGN	
									20					614	13000	20	CU YD	ASPHALT CONCRETE FOR MAINTAINING TRAFFIC	
										8				614	18601	8	SIGN MNTH	PORTABLE CHANGEABLE MESSAGE SIGN, AS PER PLAN	6
									12.28					614	20400	12.28	MILE	WORK ZONE LANE LINE, CLASS II	
									13.61					614	22000	13.61	MILE	WORK ZONE EDGE LINE, CLASS I	
									7184					614	23000	7184	FT	WORK ZONE CHANNELIZING LINE, CLASS I	
									132					614	26000	132	FT	WORK ZONE STOP LINE, CLASS I	
														SPEC	10810000	LUMP		CPM PROGRESS SCHEDULE	
														614	11000	LUMP		MAINTAINING TRAFFIC	
														619	16020	24	MONTH	FIELD OFFICE, TYPE C	
														623	10000	LUMP		CONSTRUCTION LAYOUT STAKES	
														624	10000	LUMP		MOBILIZATION	

CALCULATED RCB
CHECKED TJP

GENERAL SUMMARY

STA-21-8.25

9
40

I:\Projects\1A_2345\roadway\sheets\5437000_gs_fee-2021_1.dgn 18-FEB-2021 1:19PM thoughmp

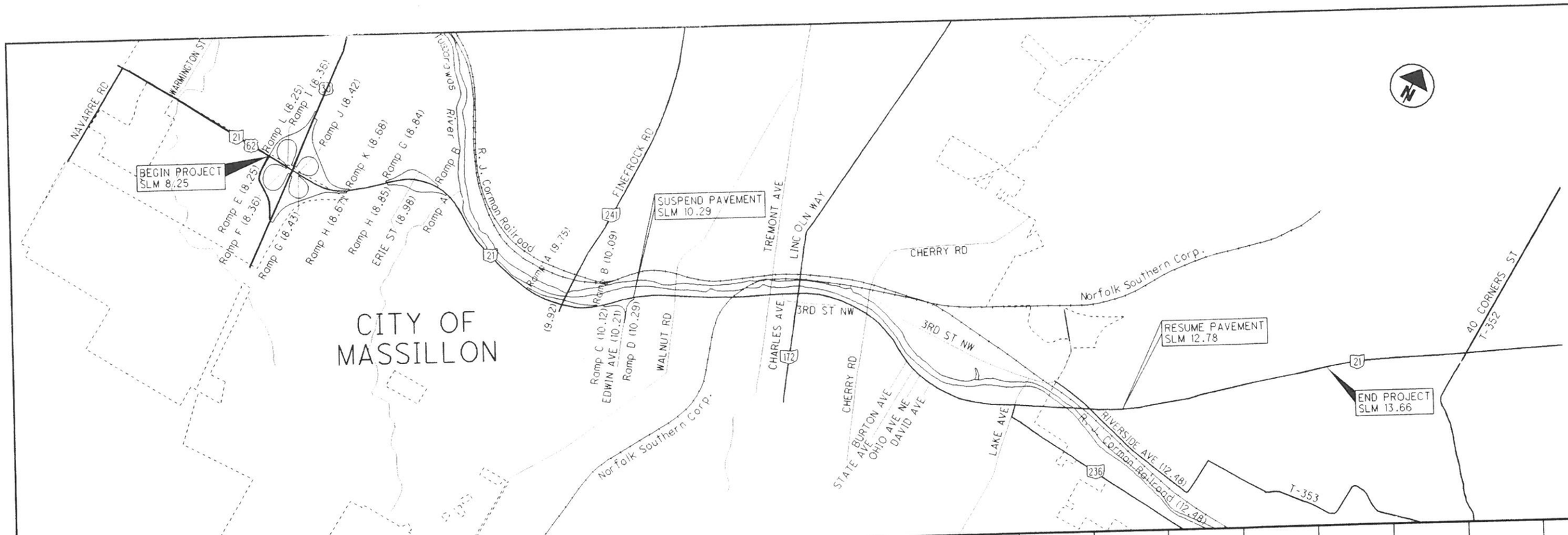

SLM RANGE			ROUTE	SIDE	DISTANCE (D)	AVERAGE WIDTH (W)	SURFACE AREA (A) A = D x W / 9	CADD GENERATED AREA (A)	254 PAVEMENT PLANING ASP CONC., APP A	407 TACK COAT, 702.13 0.15xA	407 TACK COAT FOR INT. COURSE 0.04xA	442 (2") INT COURSE, 19mm, TYPE B (446) (2xA)/36	442 (1 1/2") SUR COURSE, 12.5mm, TYPE B(446), APP (1.5xA)/36	408 PRIME COAT, APP (0.4x# sides x2xD)/9	617 COMPACTED AGGREGATE APP (# sides x2x2xD)/(12*27)	409, SAWING AND SEALING ASP CONC PAVEMENT JOINTS D/40xW					
					FT	FT	SQ YD	SQ YD	SQ YD	GAL	GAL	CU YD	CU YD	GAL	CU YD	FT					
8.25	TO	8.46	21	NB/SB	1108.80	53.00	6529.60		6529.60	979.44	261.18	362.76	272.07	197.12	27.38	1635.48					
					1108.80	6.00	739.20		739.20	110.88			30.80								
8.46		8.84	21	NB/SB	2006.40	60.00	13376.00		13376.00	2006.40	535.04	743.11	557.33	356.69	49.54	3711.84					
					2006.40	14.00	3121.07		3121.07	468.16			130.04								
8.84		9.40	21	NB/SB	2956.80	62.00	20369.07		20369.07	3055.36	814.76	1131.61	848.71	525.65	73.01	5617.92					
					2956.80	14.00	4599.47		4599.47	689.92			191.64								
9.40		10.24	21	NB/SB	4435.20	60.00	29568.00		29568.00	4435.20	1182.72	1642.67	1232.00	788.48	109.51	8205.12					
					4435.20	14.00	6899.20		6899.20	1034.88			287.47								
10.24		10.29	21	NB/SB	264.00	62.00	1818.67		1818.67	272.80	72.75	101.04	75.78	46.93	6.52	501.60					
					264.00	14.00	410.67		410.67	61.60			17.11								
12.78		13.66	21	NB/SB	4646.40	56.00	28910.93		28910.93	4336.64	1156.44	1606.16	1204.62	1652.05	229.45	8131.20					
					4646.40	14.00	7227.73		7227.73	1084.16			301.16								
ERIE ST. RAMP "A"					965.00	VARIES		2851	2851.00	427.65	114.04	158.39	118.79	171.56	23.83	641.38					
ERIE ST. RAMP "B"					420.00	VARIES		1628	1628.00	244.20	65.12	90.44	67.83	74.67	10.37	366.25					
ERIE ST. RAMP "G"					718.00	VARIES		2383	2382.89	357.43	95.32	132.38	99.29	127.64	17.73	536.15					
ERIE ST. RAMP "H"					455.00	VARIES		2508	2507.94	376.19	100.32	139.33	104.50	80.89	11.23	564.29					
FINEFROCK RD. RAMP "A"					745.00	VARIES		1924	1923.61	288.54	76.94	106.87	80.15	132.44	18.40	432.81					
FINEFROCK RD. RAMP "B"					569.00	VARIES		1681	1680.67	252.10	67.23	93.37	70.03	101.16	14.05	378.15					
EDWIN AVE. & RAMP "C"					613.00	VARIES		1903	1903.44	285.52	76.14	105.75	79.31	108.98	15.14	428.28					
EDWIN AVE. RAMP "D"					355.00	VARIES		868	867.78	130.17	34.71	48.21	36.16	63.11	8.77	195.25					
ACCEL/DECEL						VARIES		16135	16135.00	2420.25	645.40	896.39	672.29			3630.38					
									SUBTOTALS	23317.49	5298.10	7358.48	6477.08	4427.38	614.91	34976.09					
									TOTALS CARRIED TO GENERAL SUMMARY	23318	5299	7359	6478	4428	615	34977					

DESIGNED RCB
DETAILED TJP

ASPHALT CONCRETE SHEET

SLM 8.25 TO SLM 10.29 & SLM 12.78 TO SLM 13.66

STA-21-8.25

10
40

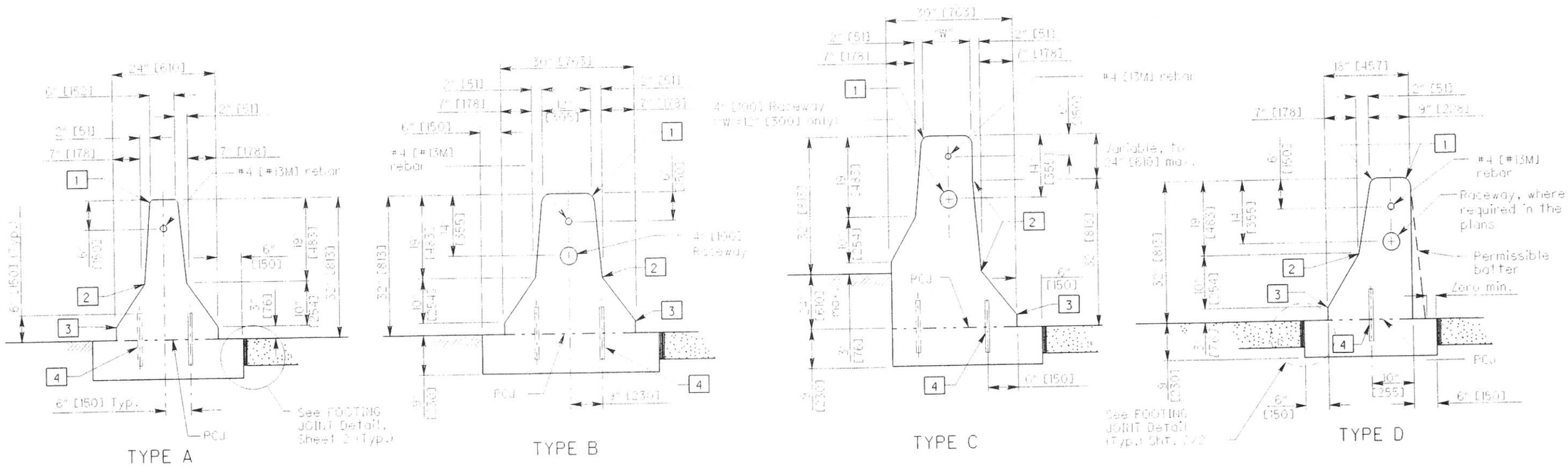

NORMAL SECTIONS

"W" = 6" [150] or 12" [305] barrier width, as specified in the plans.

All metric dimensions in brackets [] are in millimeters unless otherwise noted.

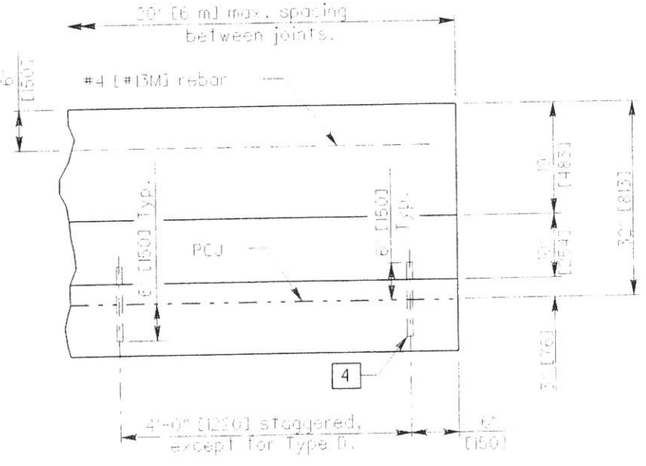

32" [813-mm] BARRIER

BARRIER ELEVATION

NOTES

JOINTS: Unreglet contraction joints spaced at 20' [6 m] maximum shall be constructed throughout the run of concrete barrier except that expansion joints shall be used at the center line of and around each bridge pier column and on either side of overhead sign supports, inlets and light pole foundations. If the inlet top is slip formed, the expansion joints adjacent to it may be omitted.

Construction joints may be constructed with metal inserts inside the forms, preformed full width joint filler, a grooving tool, or by sawing. Inserts, tooled joints, and sawed joints shall have a 3" [75] minimum depth. All joints shall be constructed for the full height of the barrier including the footing. Sawing shall be done as soon as curing will allow, to prevent spalling.

FOOTING JOINTS: The vertical walls between the barrier footing and a concrete pavement or concrete base shall be provided with a sealed joint as shown on Sheet 2. Sealing material shall conform to CMS 705.04.

PCJ = Permissible Construction Joint

MEASUREMENT: Item 622, Concrete Barrier, including transitions and pier sections, as detailed on the New Jersey Shape Barrier Transition drawing, is paid for in linear feet (meters) as one of the four types (A, B, C or D, or as Type A1 and B1, for 50" [1270] high barriers, with appropriate deductions for other items such as:

Item 604 - I-3 Median Inlet	20 Lin. Ft. [6 Meters].
Item 625 - Light Pole Foundation or Pullbox	2.5 Lin. Ft. [1 Meter].
Item 630 - Overhead Sign Support Foundation	10 Lin. Ft. [3 Meters].
Item 630 - Barrier Wall Assembly	10 Lin. Ft. [3 Meters].

TRANSITIONS: Linear transitions between the different types of barrier detailed on this Standard Drawing shall occur between contraction joints spaced no closer than 10' [3 m].

RACEWAY: The contractor shall ensure that the electrical raceway is clear of internal obstructions. Cost of the 4" [100] polyvinyl chloride raceway, and No. 10 AWG copper-clad or aluminum-clad wire if needed for future installation of circuits shall be included in the unit cost per Linear Foot [Meter] for Item 622 - Concrete Barrier, Type ---- .

STATION MARKING: The Station marking shall be impressed in the "green" concrete on both sides at the top of the barrier if specified in the plans. The cost shall be incidental to the unit cost per Linear Foot [Meter] bid for Item 622 - Concrete Barrier, Type ---- .

REFLECTORIZATION: Barrier reflectorization shall be installed in accordance with CMS 626.

LEGEND

1. 1" [25] radius or ¾" [19] chamfer.
2. Permissible 10" [250] radius.
3. Permissible 1" [25] radius.
4. #6 [#19M] epoxy coated Deformed Steel Bars, 1'-0" [305] long, spaced 4'-0" [1220] between successive Bars on a staggered pattern except in Type D. Omit Dowels when the Toe is constructed integrally with the Base.

FORMERLY DRAWING RM-4.3M DATED 10-21-97

NEW JERSEY SHAPE BARRIER (Sheet 1 of 2)

STA-21-8.25

11
40

C:\Projects\STA_21-8.25\Sheets\3543MM001.dgn 28-FEB-2007 8:45AM dougjams

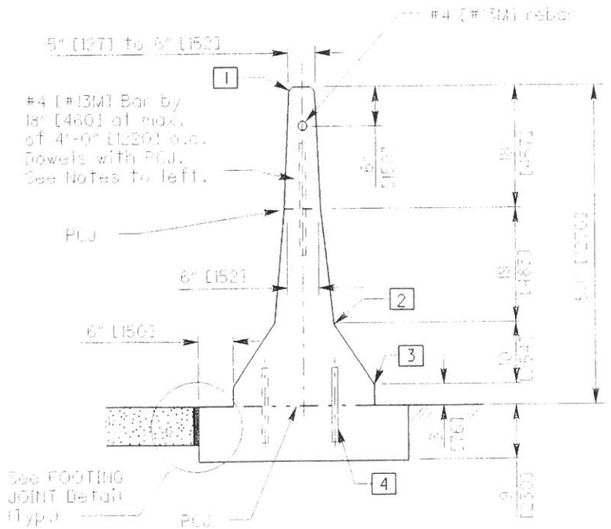

TYPE A1

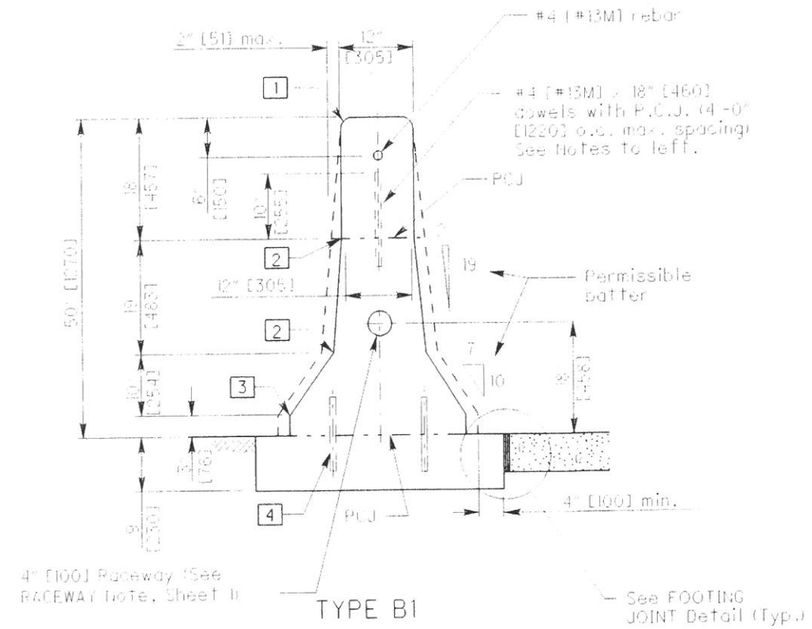

TYPE B1

50" [1270-mm] BARRIERS - TYPICAL SECTIONS

See Type A and Type B Normal Section Details (Sheet 1) for dimensions that are not shown.

All metric dimensions (in brackets [ ]) are in millimeters unless otherwise noted.

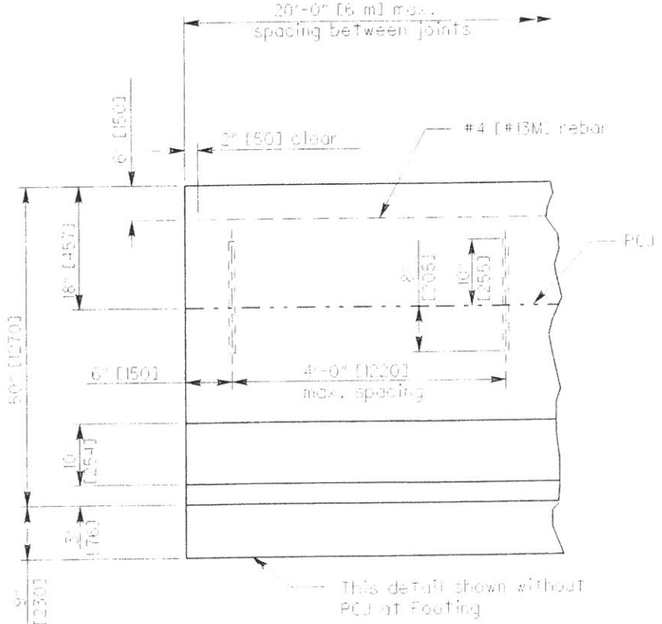

50" [1270-mm] BARRIER

BARRIER ELEVATION

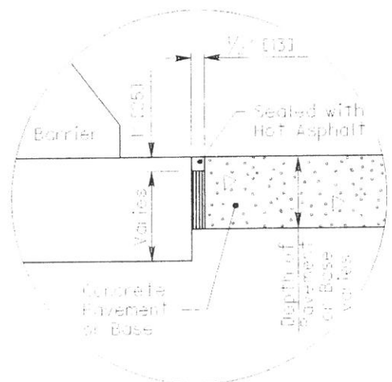

FOOTING JOINT DETAIL

See FOOTING NOTE on Sheet 1.

See FOOTING NOTE on Sheet 1.

NOTES

50" [1270-mm] BARRIER: High barrier shall be built in locations specified in the plans. Construct the lower 32" [813] of the barrier base using the same dimensions as as shown in the corresponding Normal Section on Sheet 1. The upper 18" [457] may be constructed integrally with the bottom, or separately with #4 [#13M] rebar dowels at 4'-0" [1220] maximum spacing.
Start and end dowels 6" [150] from barrier contraction joints.

LEGEND

1. 1" [25] radius or ¾" [19] chamfer.
2. Permissible 10" [250] radius.
3. Permissible 1" [25] radius.
4. #8 [#25M] epoxy coated deformed Steel Bars, 1'-0" [305] long, spaced 4'-0" [1220] between successive Bars on a staggered pattern except in Type D. Omit Dowels when the top is constructed integrally with the Base.

FORMERLY DRAWING RM-4.3M DATED 10-21-97

NEW JERSEY SHAPE BARRIER (Sheet 2 of 2)

STA-21-8.25

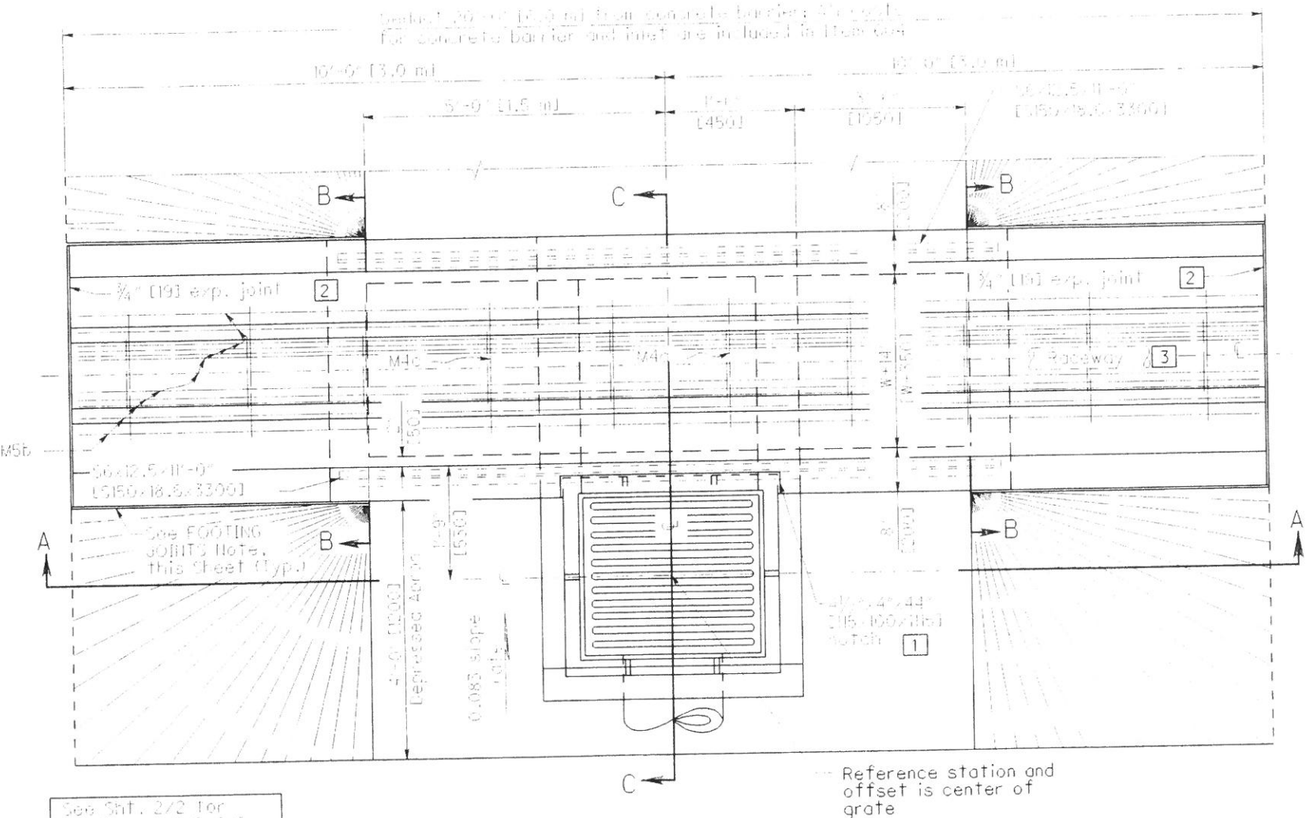

PLAN VIEW

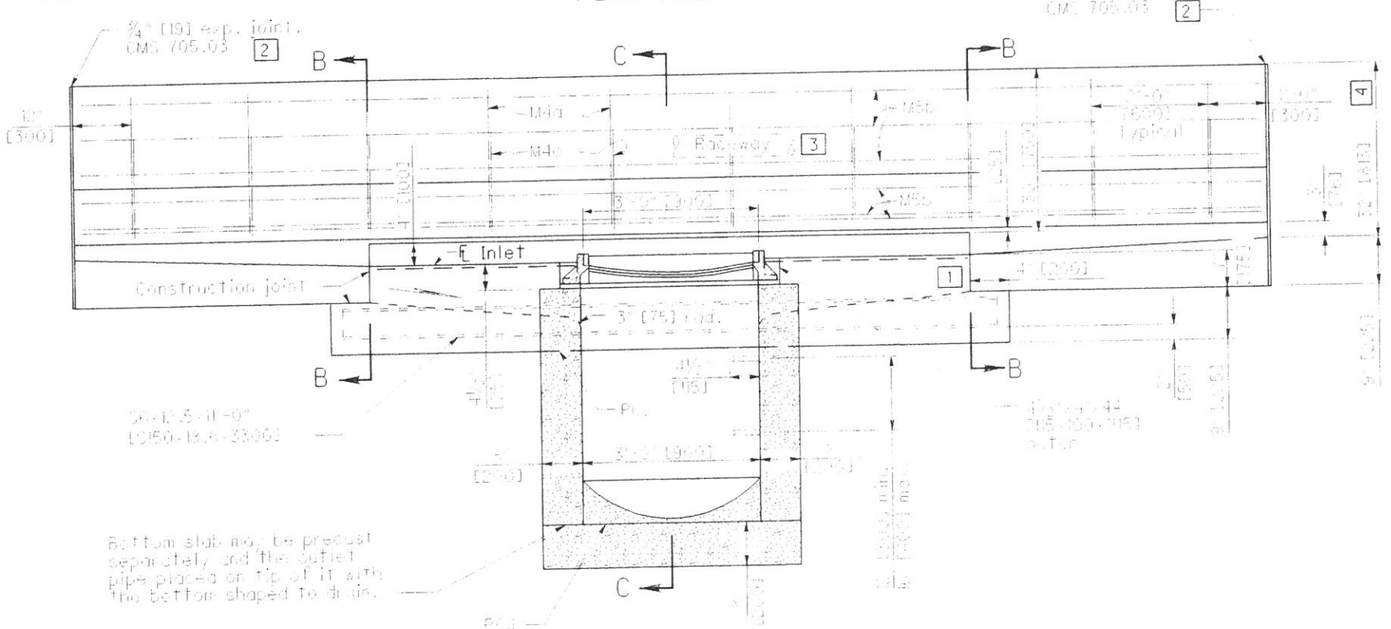

SECTION A-A

NOTES

GENERAL: For details of concrete barriers, see Plan Insert Sheet "NEW JERSEY SHAPE BARRIER". Minimum weight [mass] of frame and cover shall be 540 lbs. [245 kg].

WALLS: The walls between the bottom slab and the upper permissible construction joint may be built of brick, concrete block or cast-in-place concrete, 8" [200] nominal thickness for depths of 12" [3.5 m] or less. Precast walls shall have a minimum thickness of 6" [150] and be reinforced sufficiently to permit shipping and handling without damage. The unit above the permissible construction joint may be precast or cast-in-place.

HEIGHT: When placed in 50" [1270] high barrier the 30" [762] height shall be made 48" [1220].

CONCRETE: Cast-in-place concrete is to be Class C. All precast concrete shall meet the requirements of CMS 706.15. Required markings shall include the inlet number. Exposed concrete surfaces of the barrier shall be sealed with an approved sealer.

REINFORCING STEEL: Reinforcing steel shall be epoxy coated in accordance with CMS 509.09.

FOOTING JOINTS: The vertical walls between the barrier footing and a concrete pavement or concrete base shall be provided with a sealed joint as detailed on Plan Insert Sheet "NEW JERSEY SHAPE BARRIER".

STEPS: Steps shall be in accordance with SCD MH-1.1.

GRATE LOCATION: In superelevated curves or at other locations where there is unequal discharge from the directional roadways, the inlet grating shall be located in the roadway which discharges the major flow.

INLETS OVER 12 FEET [3.5 m] IN DEPTH: Such inlets shall be precast or cast-in-place concrete; reinforced with #4 [#13M] bars on 12" [300] centers both vertically and horizontally with 2" [50] clearance from the inside wall face.

OPENINGS: Pipe openings shall be the outside diameter of the pipe being supplied plus 2" [50] when fabricated or field cut. The interstitial space shall be filled with grout per CMS 601.

PCJ: Permissible Construction Joint

STANDARD INLET NUMBERS	
I-3A Type A	(32" [813] Barrier with W=6" [150])
I-3A Type A1	(50" [1270] Barrier with W=6" [150])
I-3B Type B	(32" [813] Barrier with W=12" [300])
I-3B Type B1	(50" [1270] Barrier with W=12" [300])

LEGEND

1. After casting is placed, fill notch with Class C concrete
2. A 1/4" [6] minimum exp. joint shall be provided in concrete pavement or concrete shoulders.
3. 4" [100] Lighting raceway, if required elsewhere by the plans.
4. Barrier height equals either 32" [813] or 50" [1270].

FORMERLY DRAWING 1-21 DATED 7-19-02

NEW JERSEY SHAPE BARRIER MEDIAN INLETS 3A & 3B (Sheet 1 of 2)

STA-21-8.25

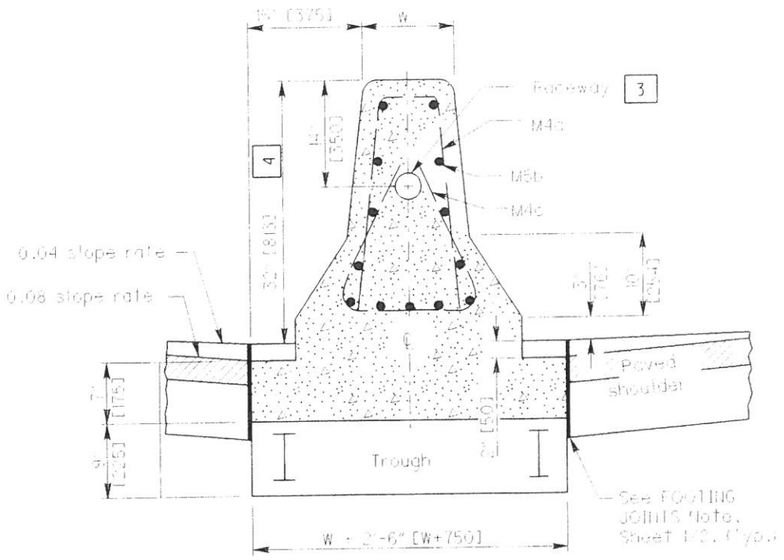

SECTION B-B
(See Sht. 1/2.)

See Sheet 1 of 2 for NOTES and LEGEND

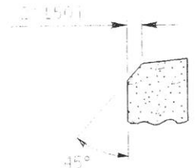

ALTERNATE SPILLWAY SHAPE

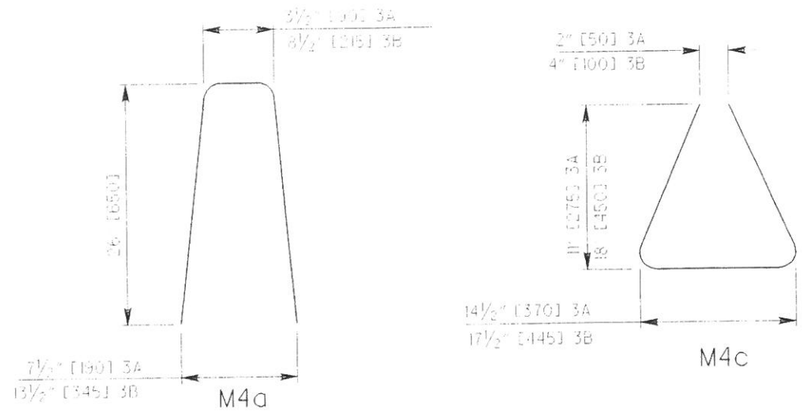

BENDING DIAGRAM

REINFORCING STEEL LIST

INLET NO.	W	M4a #4 [#13M]		M5b #5 [#16M]		M4c #4 [#13M]		S6x12.5 [S150x18.6]	
		No.	Length	No.	Length	No.	Length	No.	Length
I-3A	6" [150]	10	4'-6" [1370]	13	19'-8" [5900]	10	3'-1" [940]	2	11'-0" [3300]
I-3B	12" [300]	10	5'-0" [1525]	13	19'-8" [5900]	10	4'-6" [1370]	2	11'-0" [3300]

Included for estimating purposes only. The cost of furnishing and placing all reinforcing steel shall be included in Item 604 for payment.

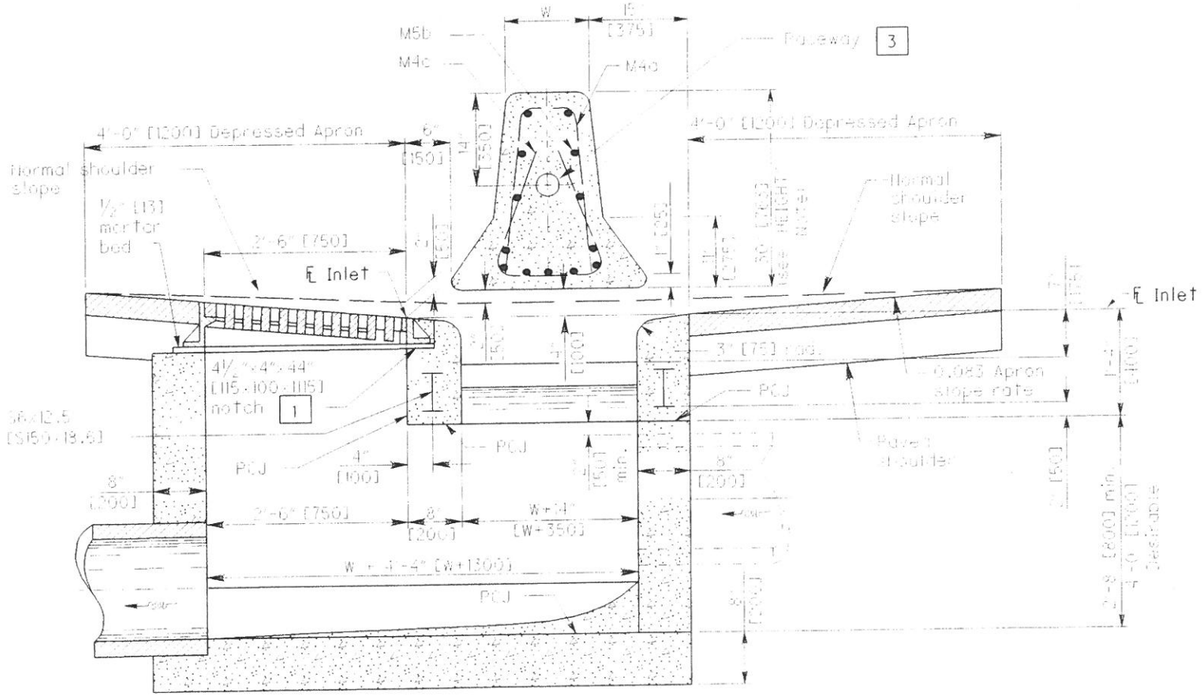

SECTION C-C
(See Sht. 1/2.)

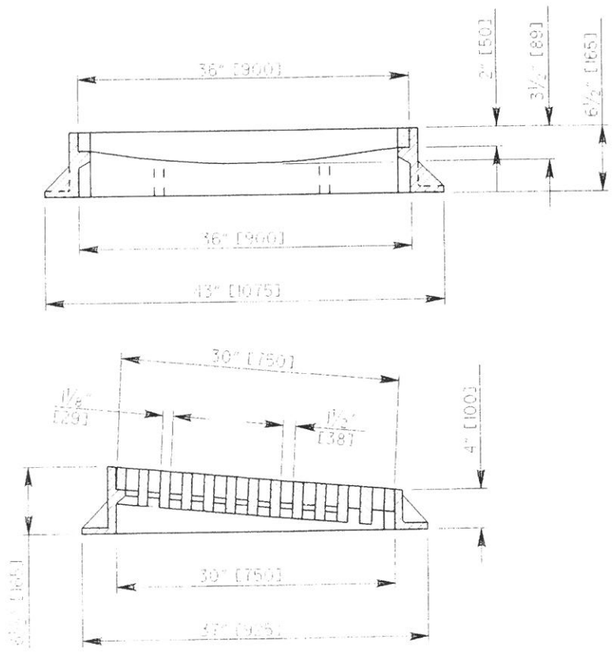

CASTING DETAILS

FORMERLY DRAWING 1-2.1 DATED 7-19-02

NEW JERSEY SHAPE BARRIER MEDIAN INLETS 3A & 3B (Sheet 2 of 2)

STA-21-8.25

14/40

CENTER LINE

GENERAL SPEC: 640
MATERIAL TYPE: 642 - PAINT & 644 - THERMOPLASTIC

CTY	ROUTE	TRU LOG	FROM	TRU LOG	TO	TOTAL MILES	EQUIVALENT SOLID LINE	COMMENTS
STA	21	0.00	NB RAMP @ EDWIN AVE.	0.03	NB RAMP @ EDWIN AVE.	0.03	0.06	ITEM 642
TOTAL ITEM 642						0.03	0.06	

LANE LINE

CTY	ROUTE	TRU LOG	FROM	TRU LOG	TO	TOTAL MILES	4" LANE LINE DASHED	4" LANE LINE SOLID	COMMENTS
STA	21	8.25	US 30 EB RAMPS	10.29	SR 21 NB ON RAMP FROM EDWIN AVE.	4.38			INCLUDES RAMPS. ITEM 642
STA	21	12.78	0.3 MILE NORTH RIVERSIDE AVE.	13.66	0.7 MILE SOUTH FORTY CORNERS RD.	1.76			ITEM 644
TOTAL ITEM 642						4.38			
TOTAL ITEM 644						1.76			

EDGE LINE

CTY	ROUTE	TRU LOG	FROM	TRU LOG	TO	WHITE EDGE LINE TOTAL	WHITE EDGE LINE HIGHWAY	WHITE EDGE LINE RAMP	YELLOW EDGE LINE TOTAL	YELLOW EDGE LINE HIGHWAY	YELLOW EDGE LINE RAMP	COMMENTS
STA	21	8.25	US 30 EB RAMPS	10.29	SR 21 NB ON RAMP FROM EDWIN AVE.	5.12	4.08	1.04	4.97	4.08	0.89	ITEM 642
STA	21	12.78	0.3 MILE NORTH RIVERSIDE AVE.	13.66	0.7 MILE SOUTH FORTY CORNERS RD.	1.76	1.76		1.76	1.76		ITEM 644
TOTAL ITEM 642						5.12	4.08	1.04	4.97	4.08	0.89	
TOTAL ITEM 644						1.76	1.76		1.76	1.76		

AUXILIARY

CTY	ROUTE LOCATION	TRU LOG	CHANNEL LINE	STOP LINE	TRANSVERSE DIAGONAL LINES WHITE	TRANSVERSE DIAGONAL LINES YELLOW	CROSS WALK LINES	WORD ON PVMT ONLY 72"	WORD ON PVMT ONLY 96"	LANE ARROWS TURN LEFT	LANE ARROWS TURN RIGHT	LANE ARROWS THRU	LANE ARROWS COMB.	SYMBOL MARKINGS RxR	SYMBOL MARKINGS SCHOOL 72"	SYMBOL MARKINGS SCHOOL 96"	ISLAND MARKING	DOTTED LINES	COMMENTS
			FT	FT	FT	FT	FT	EACH	EACH	EACH	EACH	EACH	EACH	EACH	EACH	EACH	SQ FT	FT	
STA	SR 21NB TO ERIE ST.	8.860	348		261														ITEM 642
STA	SR 21SB FROM ERIE ST	8.860	271																ITEM 642
STA	SR 21NB FROM ERIE ST	9.170	400																ITEM 642
STA	SR 21SB TO ERIE ST	9.090	422		316														ITEM 642
STA	SR 21SB FROM FINEFROCK	9.170	300																ITEM 642
STA	SR 21SB TO FINEFROCK	10.040	604		453														ITEM 642
STA	SR 21NB TO EDWIN AVE	10.170	320		240														ITEM 642
STA	SR 21NB FROM EDWIN AVE.	10.270	200																ITEM 642
STA	SR 21NB @ ERIE ST.		250	50	450					3									ITEM 642
STA	SR 21 SB @ ERIE ST		477	16	417					4									
TOTAL ITEM 642			3592	66	2137					7									

PAVEMENT MARKING SUB-SUMMARY

STA-21-8.25

TS 54
DISTRICT 4

N

Center Line Log Record and Field Sheet

COUNTY STARK ROUTE 21

Total This Route = Yellow: Solid _____, Yellow: Dash _____, White: Dash _____

Equivalent Yellow _____

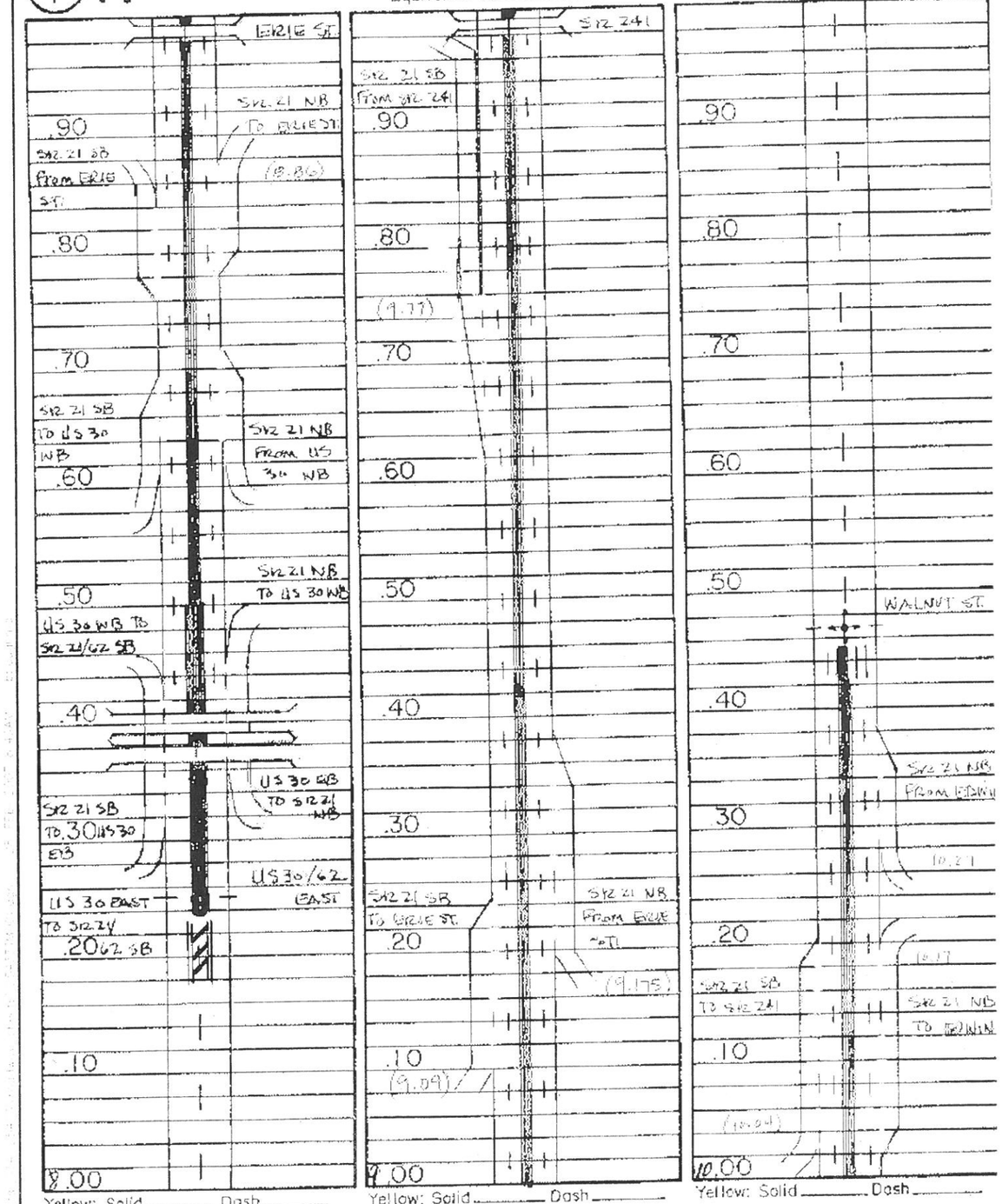

Yellow: Solid _____ Dash _____ | Yellow: Solid _____ Dash _____ | Yellow: Solid _____ Dash _____

TOTAL YELLOW THIS PAGE: SOLID _____, DASH _____, EQUIVALENT LINE _____

TS 54
DISTRICT 4

N

Center Line Log Record and Field Sheet

SHEET 3 OF 6

COUNTY STARK ROUTE 21

Total This Route = Yellow: Solid _____, Yellow: Dash _____, White: Dash _____

Equivalent Yellow _____

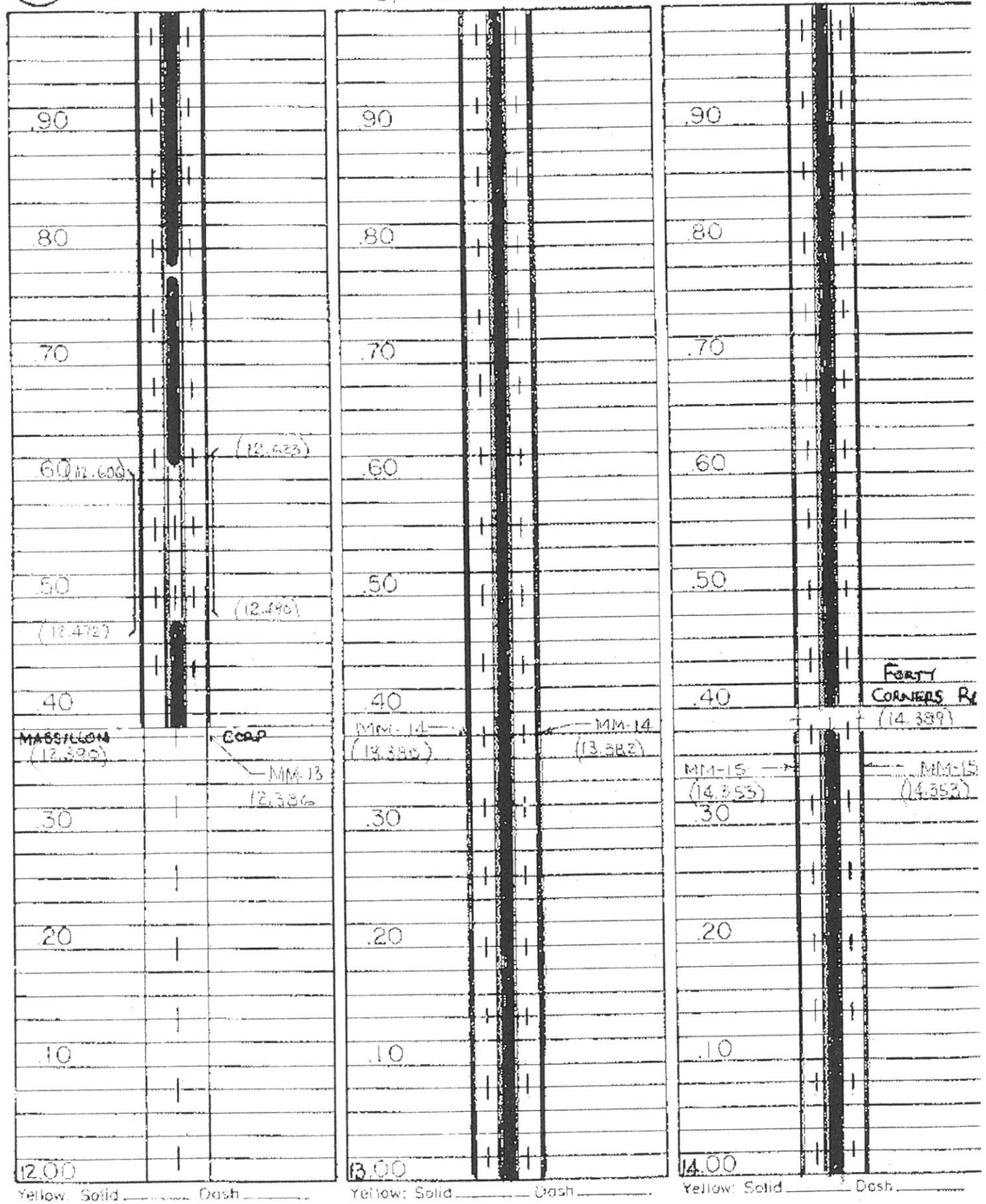

Yellow: Solid _____ Dash _____ | Yellow: Solid _____ Dash _____ | Yellow: Solid _____ Dash _____

TOTAL YELLOW THIS PAGE: SOLID _____, DASH _____, EQUIVALENT LINE _____

PAVEMENT MARKING DETAILS

STA-21-8.25

16
40

I:\Projects\STA\21543\roadway\sheets\21543TM001.dgn 28-FEB-2007 8:46AM bbaughma

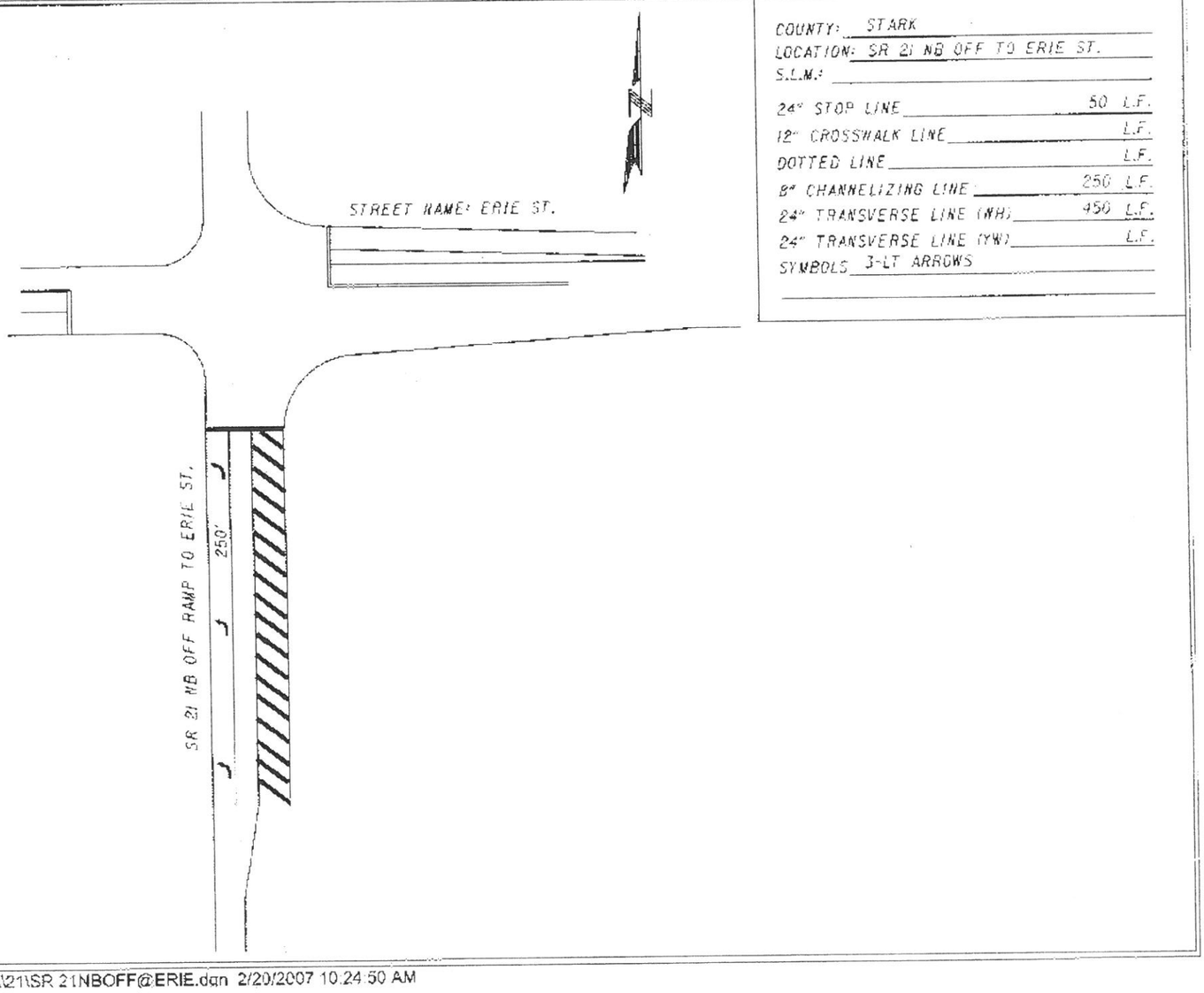

COUNTY: STARK
LOCATION: SR 21 NB OFF TO ERIE ST.
S.L.M.:

24" STOP LINE	50 L.F.
12" CROSSWALK LINE	L.F.
DOTTED LINE	L.F.
8" CHANNELIZING LINE	250 L.F.
24" TRANSVERSE LINE (WH)	450 L.F.
24" TRANSVERSE LINE (YW)	L.F.

SYMBOLS 3-LT ARROWS

...\STA\21\SR 21NBOFF@ERIE.dgn 2/20/2007 10:24:50 AM

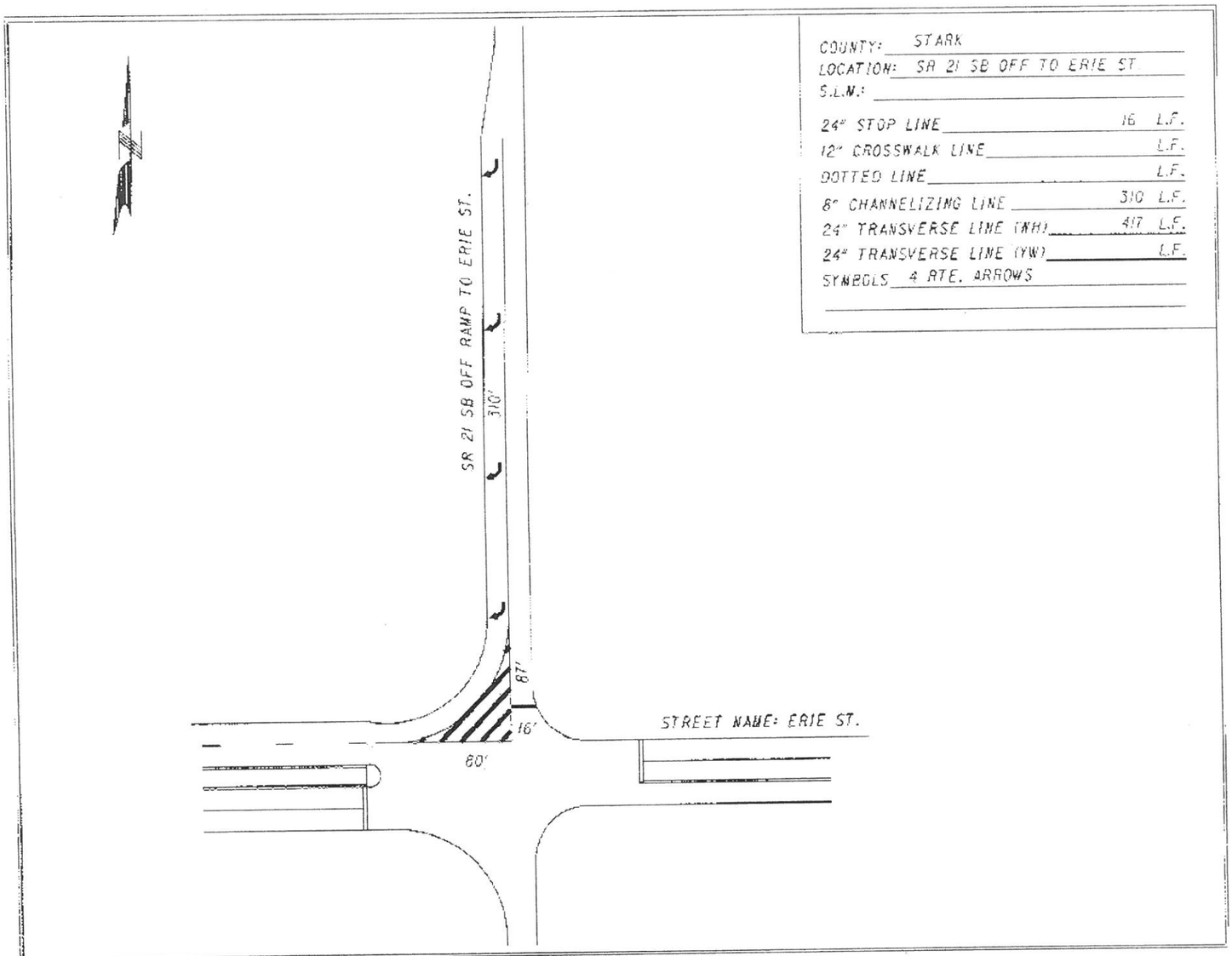

COUNTY: STARK
LOCATION: SR 21 SB OFF TO ERIE ST
S.L.M.:

24" STOP LINE	16 L.F.
12" CROSSWALK LINE	L.F.
DOTTED LINE	L.F.
8" CHANNELIZING LINE	310 L.F.
24" TRANSVERSE LINE (WH)	417 L.F.
24" TRANSVERSE LINE (YW)	L.F.

SYMBOLS 4 RTE. ARROWS

...\STA\21\SR 21SBOFF@ERIE.dgn 2/20/2007 9:58:08 AM

PAVEMENT MARKING DETAILS

\Projects\STA_25437\roadway\sheets\25437SM01.dgn 25-FEB-2021 8:46AM pmaurer

AUXILIARY PAVEMENT MARKING

COUNTY STARK
LOCATION SR 21 @ ERIE ST
PAVEMENT SURFACE TYPE

INTERSECTION TOTALS

24" STOP LINE	____ LIN. FT.
12" CROSSWALK LINE	____ LIN. FT.
8" CHANNELIZING LINE	____ LIN. FT.
SYMBOLS and LEGENDS	
24" TRANSVERSE LINE	____ LIN.FT.

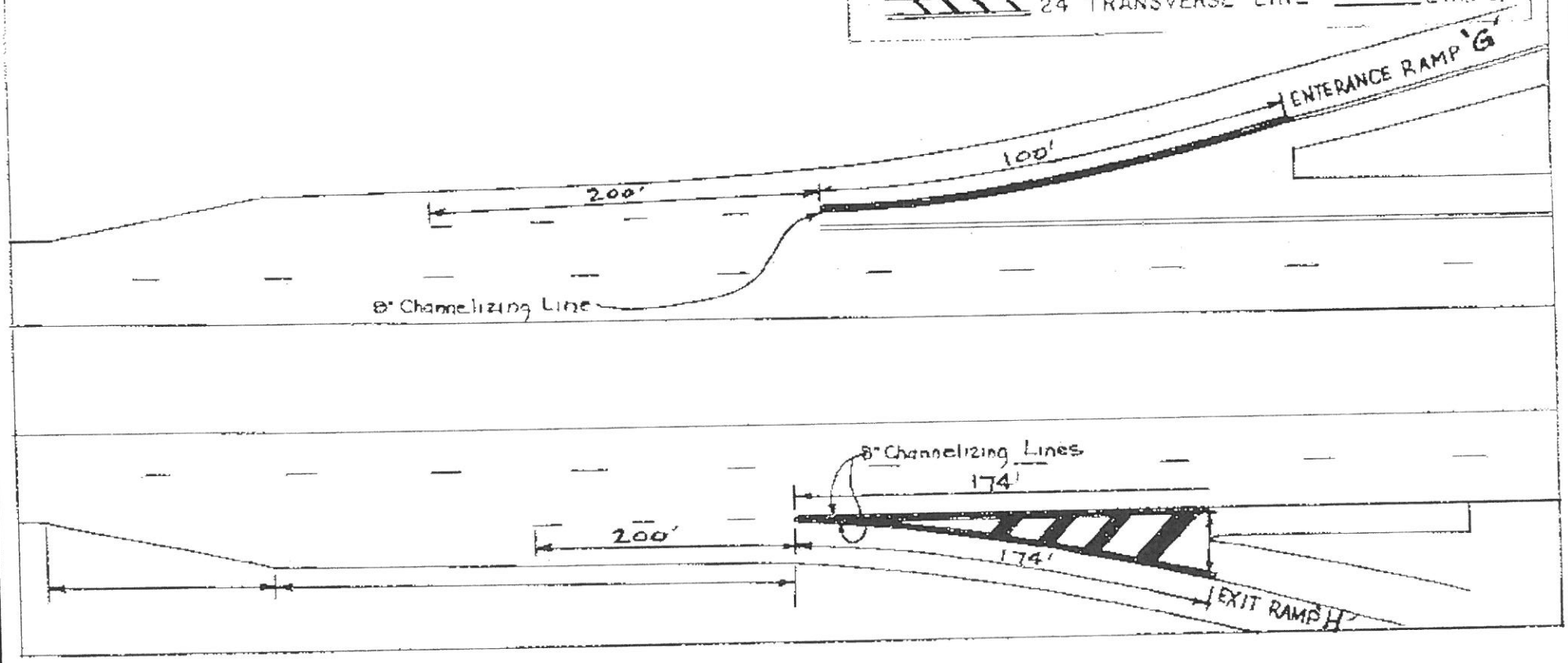

AUXILIARY PAVEMENT MARKING

COUNTY STARK
LOCATION SR 21 @ ERIE ST
PAVEMENT SURFACE TYPE

INTERSECTION TOTALS

24" STOP LINE	____ LIN. FT.
12" CROSSWALK LINE	____ LIN. FT.
8" CHANNELIZING LINE	____ LIN. FT.
SYMBOLS and LEGENDS	
24" TRANSVERSE LINE	____ LIN.FT.

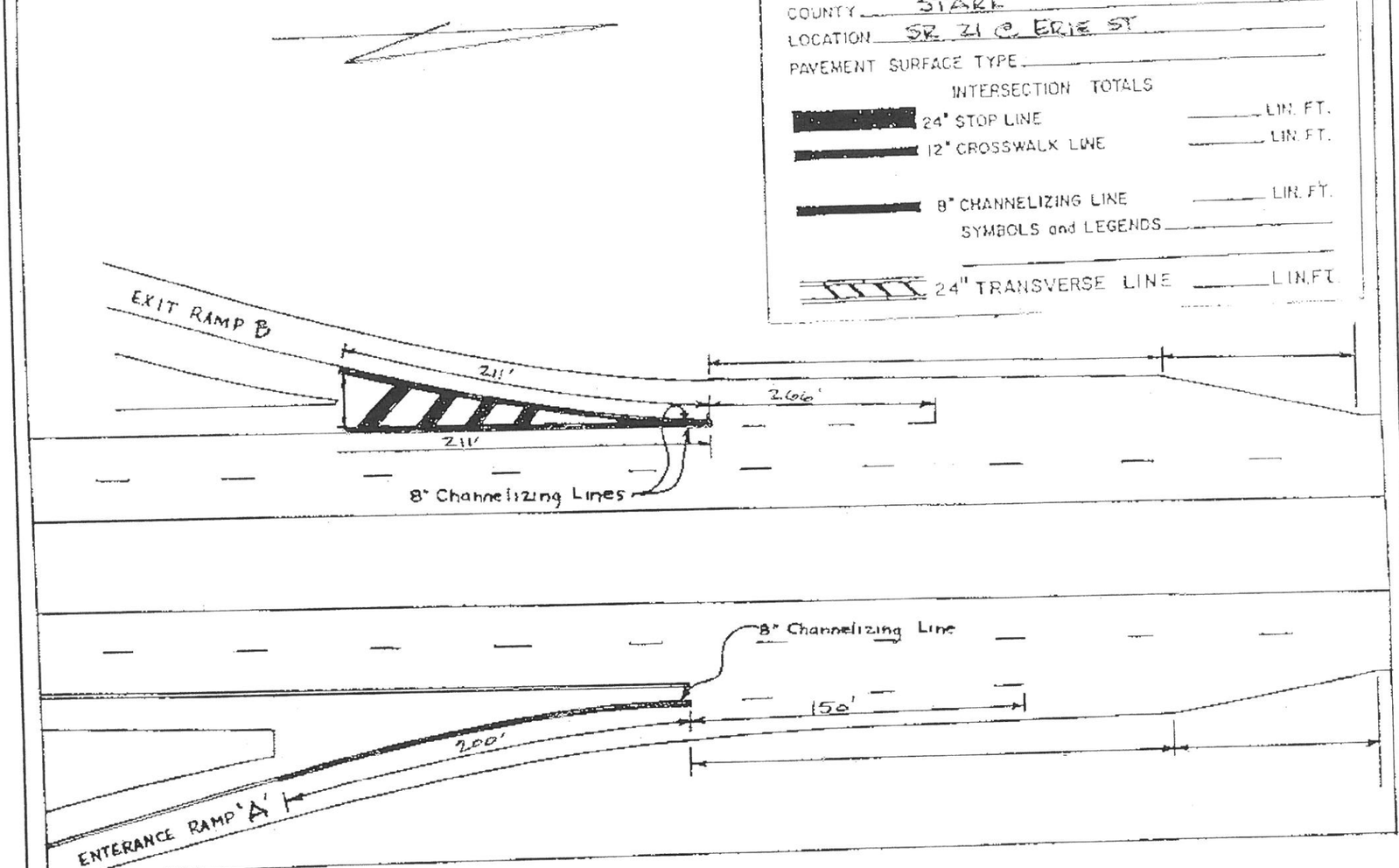

STA-21-8.25

PAVEMENT MARKING DETAILS

J:\Projects\STA\c54331\roadway\sheets\c54331TM001.dgn 28-FEB-2007 8:46AM dbaughma

AUXILIARY PAVEMENT MARKING

COUNTY STARK

LOCATION SR 21 @ SR 241

PAVEMENT SURFACE TYPE

INTERSECTION TOTALS

24" STOP LINE _____ LIN. FT.

12" CROSSWALK LINE _____ LIN. FT.

8" CHANNELIZING LINE _____ LIN. FT.

SYMBOLS and LEGENDS

24" TRANSVERSE LINE _____ LIN.FT.

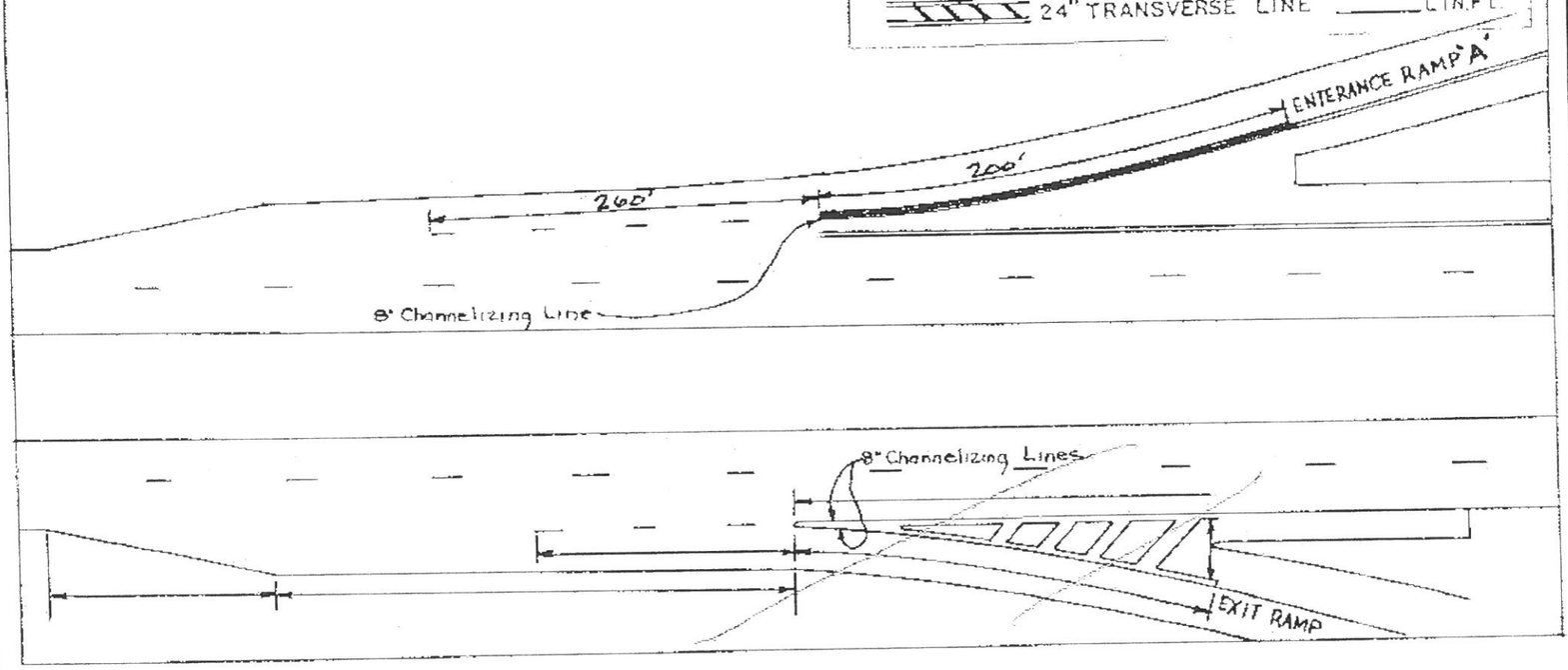

AUXILIARY PAVEMENT MARKING TAPERED

COUNTY STARK

LOCATION SR 21 @ SR 241

PAVEMENT SURFACE TYPE

INTERSECTION TOTALS

24" STOP LINE _____ LIN. FT.

12" CROSSWALK LINE _____ LIN. FT.

8" CHANNELIZING LINE _____ LIN. FT.

SYMBOLS and LEGENDS

24" TRANSVERSE LINE _____ LIN.FT.

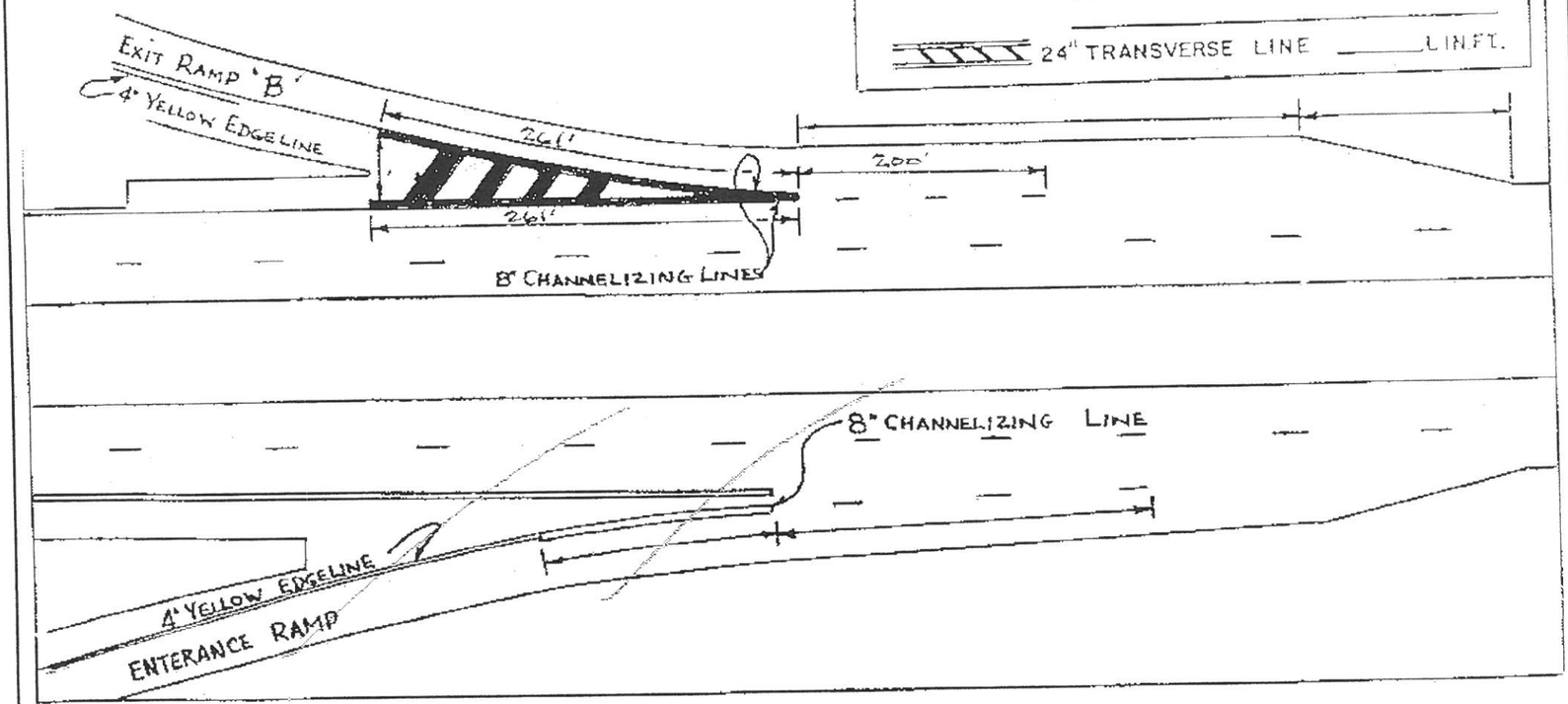

I:\Projects\STA-21-8.25\roadway\sheets\25825M001.dgn 26-FEB-2007 8:40AM bpaughm3

AUXILIARY PAVEMENT MARKING

COUNTY STARK
LOCATION SR. 21 @ EDWIN AVE.
PAVEMENT SURFACE TYPE

INTERSECTION TOTALS

24" STOP LINE _____ LIN. FT.
12" CROSSWALK LINE _____ LIN. FT.
8" CHANNELIZING LINE _____ LIN. FT.
SYMBOLS and LEGENDS
24" TRANSVERSE LINE _____ LIN. FT.

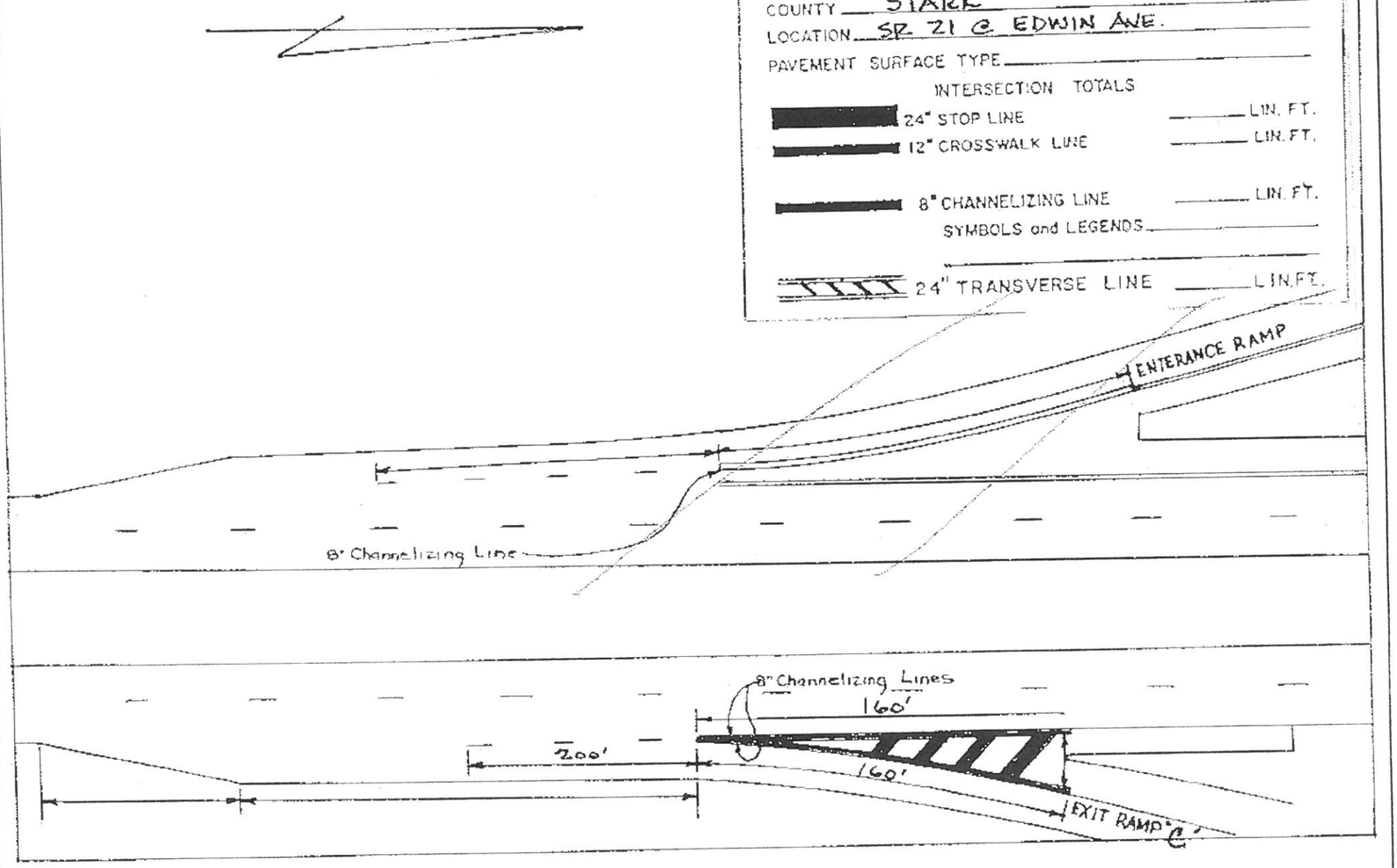

AUXILIARY PAVEMENT MARKING TAPERED

COUNTY STARK
LOCATION SR 21 @ EDWIN AVE.
PAVEMENT SURFACE TYPE

INTERSECTION TOTALS

24" STOP LINE _____ LIN. FT.
12" CROSSWALK LINE _____ LIN. FT.
8" CHANNELIZING LINE _____ LIN. FT.
SYMBOLS and LEGENDS
24" TRANSVERSE LINE _____ LIN. FT.

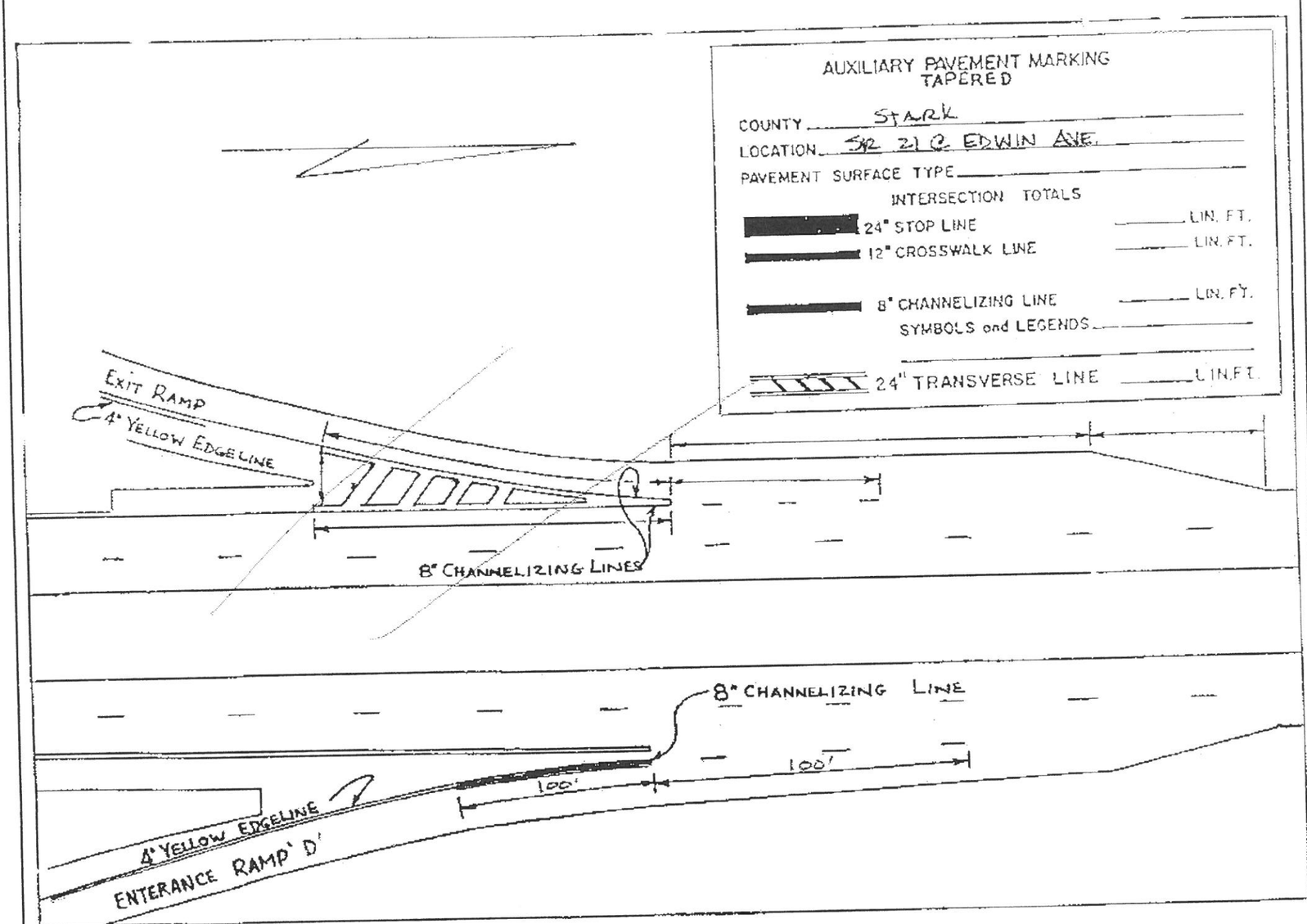

RPM REPLACEMENT / REMOVAL

STANDARD CONSTRUCTION DWG.

TC-65.10	1-21-05
TC-65.11	1-21-05

LOCATION				ITEM 202	ITEM 621				REMARKS
COUNTY	ROUTE	SECTION (S.L.M.) FROM	SECTION (S.L.M.) TO	RAISED PAVEMENT MARKER REMOVED	RPM LOW PROFILE YELLOW/ YELLOW	RPM LOW PROFILE WHITE/ RED	RPM LOW PROFILE ONE-WAY WHITE	RPM LOW PROFILE YELLOW/ RED	
SUM	21	12.78	13.66	120		120			SR 21 NB. AND SB. FROM RESUME WORK TO END PROJECT (LANE LINE)
TOTAL				120		120			TOTALS CARRIED TO GENERAL SUMMARY

CALCULATED KG
CHECKED DY

RAISED PAVEMENT MARKER SUB SUMMARY

SUM-21-8.25

\Projects\STA\25433\roadway\sheets\25433RPM.dgn 28-FEB-2007 8:46AM bbaughma

SIGN PLACEMENT

THE EXACT LOCATIONS OF SIGNS ARE TO BE STAKED AND CHECKED BY THE ENGINEER PRIOR TO PLACEMENT TO INSURE CLEARANCE OF DRIVES, ROADWAYS AND OTHER OBSTACLES. IF THERE ARE ANY CONFLICTS, THEY SHALL BE ADJUSTED AS DIRECTED BY THE ENGINEER. PAYMENT FOR THIS IS INCIDENTAL TO ALL 630 ITEMS.

ENDANGERED SPECIES HABITAT - INDIANA BAT

THIS PROJECT IS WITHIN THE RANGE OF THE FEDERALLY ENDANGERED INDIANA BAT (MYOTIS SODALIS) AND MAY IMPACT SUMMER ROOSTING AND BROOD-REARING HABITAT FOR THIS SPECIES. THE SUMMER ROOSTING AND BROOD-REARING HABITAT FOR THE INDIANA BAT CONSISTS OF LIVING OR STANDING DEAD TREES OR SNAGS WITH EXFOLIATING, PEELING OR LOOSE BARK, SPLIT TRUNKS AND/OR BRANCHES OR CAVITIES. THEREFORE, ANY UNAVOIDABLE CUTTING OF TREES AND/OR SNAGS WITH EXFOLIATING, PEELING OR LOOSE BARK, SPLIT TRUNKS AND/OR BRANCHES OR CAVITIES SHALL BE PERFORMED ONLY AFTER SEPTEMBER 15 AND BEFORE APRIL 15 WHEN THE SPECIES WOULD NOT BE USING SUCH HABITAT.

ITEM 690 - SPECIAL, MISC.: CLEARING AND GRUBBING

THIS ITEM IS INTENDED TO BE USED TO CLEAR ALL GROWTH IN FRONT OF HIGHWAY SIGNS THAT MAY IMPEDE ITS VIEWING BY MOTORISTS.

IN ADDITION TO THE REQUIREMENTS OF 201, THE CONTRACTOR WILL REMOVE STUMPS AT LEAST 6 INCHES BELOW GROUND SURFACE AND THE WORK WILL NOT INCLUDE SCALPING. THE AREA TO BE CLEARED AND GRUBBED WILL BE DELINEATED IN THE WORK ORDER.

THE FOLLOWING IS AN ESTIMATED QUANTITY TO BE USED AS DIRECTED BY THE ENGINEER FOR THE ABOVE WORK:

ITEM 690-SPECIAL, MISC.: CLEARING AND GRUBBING 0.5 ACRE.

PAYMENT WILL BE AT THE UNIT BID PRICE PER ACRE CLEARED AND GRUBBED AND WILL INCLUDE BACKFILLING HOLES AND REMOVING ALL TREES AND STUMPS.

ITEM 630 - REMOVAL OF MISC. TRAFFIC CONTROL ITEM, BEAM SUPPORT FOUNDATION

THE CONTINGENCY QUANTITY HAS BEEN PROVIDED FOR THIS WORK TO BE USED FOR REMOVAL OF BEAM SUPPORT FOUNDATIONS, AS DIRECTED BY THE ENGINEER, WHERE EVER NEEDED THROUGHOUT THE PROJECT.

THE FOLLOWING QUANTITY HAS BEEN CARRIED TO THE GENERAL SUMMARY:
ITEM 630 - REMOVAL OF MISC. TRAFFIC CONTROL ITEM, BEAM SUPPORT FOUNDATION - 10 EACH

I:\Projects\STA\25433\roadway\sheets\signs\24553gn001.dgn 26-FEB-2007 8:44AM sbaughma

CALCULATED CX
CHECKED KPW

TRAFFIC CONTROL GENERAL NOTES

STA-21-8.25

REF NO.	SHEET NO.	SLM	SIDE	CODE * PLYWOOD # YELLOW/GREEN ## WHITE ON BROWN	SIZE (INCHES)	625	630																								631				
						GROUND ROD	GROUND MOUNTED SUPPORT, NO. 3 POST			GROUND MOUNTED SUPPORT, W8X18 BEAM	GROUND MOUNTED SUPPORT, W10X22 BEAM	GROUND MOUNTED SUPPORT, W10X12 BEAM		BREAKAWAY BEAM CONNECTION	OVERHEAD SIGN SUPPORT, TYPE TC-12.30, DESIGN 5	OVERHEAD SIGN SUPPORT, TYPE TC-12.30, DESIGN 8	SIGN ATTACHMENT ASSEMBLY	SIGN SUPPORT ASSEMBLY, POLE MOUNTED	SIGN, FLAT SHEET	SIGN, GROUND MOUNTED EXTRUSHEET	SIGN, OVERHEAD EXTRUSHEET	GROUND MOUNTED BEAM SUPPORT FOUNDATION	RIGID OVERHEAD SIGN SUPPORT FOUNDATION	REMOVAL OF GROUND MOUNTED SIGN AND DISPOSAL	REMOVAL OF GROUND MOUNTED MAJOR SIGN AND DISPOSAL	REMOVAL OF GROUND MOUNTED POST SUPPORT AND DISPOSAL	REMOVAL OF GROUND MOUNTED BEAM SUPPORT AND DISPOSAL	REMOVAL OF OVERHEAD MOUNTED SIGN AND DISPOSAL	REMOVAL OF POLE MOUNTED SIGN AND DISPOSAL	REMOVAL OF OVERHEAD SIGN SUPPORT AND DISPOSAL, TYPE TC-12.30	REMOVAL OF LUMINAIRE AND DISPOSAL	REMOVAL OF DISCONNECT SWITCH AND DISPOSAL	REMOVAL OF BALLAST AND RDISPOSAL	REMOVAL OF SIGN WIRING AND DISPOSAL	REMOVAL OF SIGN SERVICE AND DISPOSAL
						EA	FT			FT	FT	FT		EA	EA	EA	EA	EA	SF	SF	SF	EA	EA	EA	EA	EA	EA	EA	EA	EA	EA	EA	EA	EA
	29			**SR 21**																														
1		8.25	LT	M3-3-30	30 X 15		13.75												3.13					1		1								
			LT	M1-5-2-30	30 X 30														6.25					1										
2		8.25	LT	M3-4-30	30 X 15		13.75												3.13					1		1								
			LT	M1-4-2-30	30 X 30														6.25					1										
3		8.25	RT	M2-H6-168	168 X 120	1									1						140		1					1		1				
4		8.43	LT	M4-1-30	30 X 15		16.5												3.13					1		1								
			LT	M3-3-30	30 X 15														3.13					1										
			LT	M1-1-2-30	30 X 30														6.25					1										
			LT	M6-2R-24	24 X 18														3					1										
5		8.46	RT	M3-4-30																				1		1								
			RT	M1-4-2-30																				1										
			RT	M5-1R-24																				1										
6		8.67	LT	E6-H2-252	252 X 96													4			168							1						
			LT	E1-H1-240	240 X 108													4			180							1						
			LT	E1-H3-168	168 X 96													3			112							1						
7		8.75	LT	M3-4-30																				1		1								
			LT	M1-4-2-30																				1										
			LT	M5-1R-24																				1										
8		8.75	RT	M3-1-30	30 X 15														3.13					1		1								
			RT	M1-5-2-30	30 X 30														6.25					1										
8A		8.83	RT	E1-H1-180	180 X 144													3			180							1						
9		8.88	RT	M4-1-30	30 X 15		16.5												3.13															
			RT	M3-1-30	30 X 15														3.13															
			RT	M1-1-2-30	30 X 30														6.25															
10		9.08	LT	M4-1-30	30 X 15		16.5												3.13															
			LT	M3-3-30	30 X 15														3.13					1		1								
			LT	M1-1-2-30	30 X 30														6.25					1										
11		9.13	LT	E1-H1-120	120 X 108													2			90							1						
12		9.31	RT	M3-1-30	30 X 15		13.75												3.13															
			RT	M1-5-2-30	30 X 30														6.25															
12A		9.41	RT	R2-1-36	36 X 48		14												12					1		2								
							14																												
				TOTALS CARRIED TO SHEET 28		1	119	0	0	0	0	0	0	0	1	0	16	0	90	0	870	0	1	19	0	9	0	6	0	1	0	0				

CALCULATED ALP
CHECKED

SR 21 SUM-SUMMARY

STA-21-8.25

23
40

I:\Projects\STA\21\43\roadway\sheets\sheet_plans\2543sr2107.dgn 28-FEB-2007 9:45:AM cbaughma

REF NO.	SHEET NO.	SLM	SIDE	CODE ' PLYWOOD # YELLOW/GREEN ## WHITE ON BROWN	SIZE (INCHES)	625	630																							631				
						GROUND ROD	GROUND MOUNTED SUPPORT, NO 3 POST			GROUND MOUNTED SUPPORT W8X18 BEAM	GROUND MOUNTED SUPPORT W10X22 BEAM	GROUND MOUNTED SUPPORT W10X12 BEAM		BREAKAWAY BEAM CONNECTION	OVERHEAD SIGN SUPPORT TYPE TC-12.30, DESIGN 5	OVERHEAD SIGN SUPPORT TYPE TC-12.30, DESIGN 8	SIGN ATTACHMENT ASSEMBLY	SIGN SUPPORT ASSEMBLY, POLE MOUNTED	SIGN, FLAT SHEET	SIGN, GROUND MOUNTED EXTRUSHEET	SIGN, OVERHEAD EXTRUSHEET	GROUND MOUNTED BEAM SUPPORT FOUNDATION	RIGID OVERHEAD SIGN SUPPORT FOUNDATION	REMOVAL OF GROUND MOUNTED SIGN AND DISPOSAL	REMOVAL OF GROUND MOUNTED MAJOR SIGN AND DISPOSAL	REMOVAL OF GROUND MOUNTED POST SUPPORT AND DISPOSAL	REMOVAL OF GROUND MOUNTED BEAM SUPPORT AND DISPOSAL	REMOVAL OF OVERHEAD MOUNTED SIGN AND DISPOSAL	REMOVAL OF POLE MOUNTED SIGN AND DISPOSAL	REMOVAL OF OVERHEAD SIGN SUPPORT AND DISPOSAL, TYPE TC-12.30	REMOVAL OF LUMINAIRE AND DISPOSAL	REMOVAL OF DISCONNECT SWITCH AND DISPOSAL	REMOVAL OF BALLAST AND RDISPOSAL	REMOVAL OF SIGN WIRING AND DISPOSAL	REMOVAL OF SIGN SERVICE AND DISPOSAL
						EA	FT			FT	FT	FT		EA	EA	EA	EA	EA	SF	SF	SF	EA	EA	EA	EA	EA	EA	EA	EA	EA	EA	EA	EA	EA
	29			**SR 21**																														
13		9.49	LT	M3-3-30	30 X 15		13.75												3.13					1		1								
			LT	M1-5-2-30	30 X 30														6.25					1										
14		9.55	LT	E1-H1-120	120 X 108											2					90							1						
15		9.61	RT	E1-H1-180	180 X 144	1									1						180		1											
	30																																	
16		10.01	LT	M4-1-30	30 X 15		16.5												3.13					1		1								
			LT	M3-3-30	30 X 15														3.13					1										
			LT	M1-1-2-30	30 X 30														6.25					1										
			LT	M6-3-24	24 X 18														3					1										
17		10.10	LT	E1-H1-132	132 x 144											2					132							1						
			LT	E1-H3-156	180 X 72											3					90							1						
18		10.11	RT	E1-H3-216	216 X 120											3					180							1						
19		10.20	LT	E1-H3																								1		1	1				
20		10.40	LT	E1-H1-156	156 X 108						26.5 30.1			2						135		2			1		2								
21		10.43	LT	M3-3-30	30 X 15		13.75												3.13					1		1								
			LT	M1-5-2-30	30 X 30														6.25					1										
22		10.45	LT	M1-5-2-24	24 X 24		13.25												4					1		1								
			LT	M6-4-21	21 X 15														2.19					1										
23		10.47	RT	M1-5-2-24	24 X 24		13.25												4					1		1								
			RT	M6-4-21	21 X 15														2.19					1										
24		10.48	RT	M3-1-30	30 X 15		13.75												3.13					1		1								
			RT	M1-5-2-30	30 X 30														6.25					1										
	31																																	
25		10.65	RT	M4-5-30	30 X 15														3.13					1										
			RT	M1-5-3-30	24 X 30														5					1										
			RT	M4-5-24	12 X 24														2					1										
			RT	M8-H3-24	24 X 24														4					1										
			RT	M5-1R-21	21 X 15														2.19					1										
26		10.86	RT	M4-5-30	30 X 15														3.13					1										
			RT	M1-5-3-30	24 X 30														5					1										
			RT	M5-1R-24	24 X 18														3					1										
27		10.94	LT	M3-3-30	30 X 15		13.75												3.13					1		1								
			LT	M1-5-2-30	30 X 30														6.25					1										
TOTALS CARRIED TO SHEET 28						1	98	0	0	0	57	0	0	2	0	1	10	0	93	135	672	2	1	24	1	7	2	5	0	1	1				

CALCULATED ALP
CHECKED

SR 21 SUM-SUMMARY

STA-21-8.25

I:\Projects\STA_21-8.25\roadway\sheets\signs\25839sg00.dgn 28-FEB-2008 8:46AM bhoughto

REF NO.	SHEET NO.	SLM	SIDE	CODE * PLYWOOD # YELLOW/GREEN ## WHITE ON BROWN	SIZE (INCHES)	625	630																									631					
						GROUND ROD	GROUND MOUNTED SUPPORT, NO 3 POST			GROUND MOUNTED SUPPORT, W8X18 BEAM	GROUND MOUNTED SUPPORT, W10X22 BEAM	GROUND MOUNTED SUPPORT, W10X12 BEAM		BREAKAWAY BEAM CONNECTION	OVERHEAD SIGN SUPPORT, TYPE TC-12.30, DESIGN 5	OVERHEAD SIGN SUPPORT, TYPE TC-12.30, DESIGN 8	SIGN ATTACHMENT ASSEMBLY	SIGN SUPPORT ASSEMBLY, POLE MOUNTED	SIGN, FLAT SHEET	SIGN, GROUND MOUNTED EXTRUSHEET	SIGN, OVERHEAD EXTRUSHEET	GROUND MOUNTED BEAM SUPPORT FOUNDATION	RIGID OVERHEAD SIGN SUPPORT FOUNDATION	REMOVAL OF GROUND MOUNTED SIGN AND DISPOSAL	REMOVAL OF GROUND MOUNTED MAJOR SIGN AND DISPOSAL	REMOVAL OF GROUND MOUNTED POST SUPPORT AND DISPOSAL	REMOVAL OF GROUND MOUNTED BEAM SUPPORT AND DISPOSAL	REMOVAL OF OVERHEAD MOUNTED SIGN AND DISPOSAL	REMOVAL OF POLE MOUNTED SIGN AND DISPOSAL	REMOVAL OF OVERHEAD SIGN SUPPORT AND DISPOSAL TYPE TC-12.30	REMOVAL OF LUMINAIRE AND DISPOSAL	REMOVAL OF DISCONNECT SWITCH AND DISPOSAL	REMOVAL OF BALLAST AND RDISPOSAL	REMOVAL OF SIGN WIRING AND DISPOSAL	REMOVAL OF SIGN SERVICE AND DISPOSAL
						EA	FT			FT	FT	FT		EA	EA	EA	EA	EA	SF	SF	SF	EA	EA	EA	EA	EA	EA	EA	EA	EA	EA	EA	EA	EA	EA
	31			**SR 21**																															
28		10.96	LT	M4-5-30	30 X 15														3.13																
			LT	M1-5-3-30	24 X 30														5																
			LT	M6-1L-24	24 X 18														3																
			LT	M8-H3-24	24 X 24														4					1											
			LT	M6-1L-21	21 X 15														2.19					1											
29		10.97	LT	M4-5-30	30 X 15		15.25												3.13					1		1								
			LT	M1-4-2-30	30 X 30														6.25					1											
			LT	M6-1L-24	24 X 18														3					1											
30		10.97	LT	M1-5-2-30	30 X 30		14												6.25					1		1								
			LT	M6-4-24	24 X 18														3					1											
31		10.98	LT	M2-1																				1		1								
			LT	M1-5-3																				1											
			LT	M6-1L																				1											
32		10.98	RT	M2-H8-66	66 X 36		13												16.5					1		2								
							13																												
33		10.98	RT	M3-1-30	30 X 15		13.75												3.13					1		1								
			RT	M1-5-2-30	30 X 30														6.25					1											
34		11.11	LT	M4-5-30	30 X 15														3.13					1											
			LT	M1-5-3-30	24 X 30														5					1											
			LT	M5-1R-24	24 X 18														3					1											
			LT	M4-5-24	12 X 24														2					1											
			LT	M8-H3-24	24 X 24														4					1											
			LT	M5-1R-21	21 X 15														2.19					1											
35		11.19	LT	M2-H3-120	120 X 108					23.3 22.1				2						90		2			1		2								
36		11.36	LT	M3-3-30	30 X 15		13.75												3.13					1		1								
			LT	M1-5-2-30	30 X 30														6.25					1											
	32																																		
37		11.40	RT	M1-5-2-24	24 X 24		13.25												4					1		1								
			RT	M6-4-21	21 X 15														2.19					1											
38		11.42	RT	M3-1-30	30 X 15		13.75												3.13					1		1								
			RT	M1-5-2-30	30 X 30														6.25					1											
39		11.77	RT	M2-H2A-108	108 X 108							23 23.1		2						81		2			1		2								
TOTALS CARRIED TO SHEET 28						0	110	0	0	46	0	47	0	4	0	0	0	0	110	171	0	4	0	25	2	9	4	0	0	0	0	0	0	0	0

ALIGNED ALP
UNLOADED

SR 21 SUM-SUMMARY

STA-21-8.25

25
40

I:\Projects\STA_25437\roadway\sheets\sum\s5435a001.dgn 28-FEB-2007 8:46AM steadmma

REF NO.	SHEET NO.	SLM	SIDE	CODE * PLYWOOD # YELLOW/GREEN ## WHITE ON BROWN	SIZE (INCHES)	625	630																						631				
						GROUND ROD	GROUND MOUNTED SUPPORT, NO. 3 POST			GROUND MOUNTED SUPPORT, W8X18 BEAM	GROUND MOUNTED SUPPORT, W10X22 BEAM	GROUND MOUNTED SUPPORT, W10X12 BEAM		BREAKAWAY BEAM CONNECTION	OVERHEAD SIGN SUPPORT, TYPE TC-12.30, DESIGN 5	OVERHEAD SIGN SUPPORT, TYPE TC-12.30, DESIGN 8	SIGN ATTACHMENT ASSEMBLY	SIGN SUPPORT ASSEMBLY, POLE MOUNTED	SIGN, FLAT SHEET	SIGN, GROUND MOUNTED EXTRUSHEET	SIGN, OVERHEAD EXTRUSHEET	GROUND MOUNTED BEAM SUPPORT FOUNDATION	RIGID OVERHEAD SIGN SUPPORT FOUNDATION	REMOVAL OF GROUND MOUNTED SIGN AND DISPOSAL	REMOVAL OF GROUND MOUNTED MAJOR SIGN AND DISPOSAL	REMOVAL OF GROUND MOUNTED POST SUPPORT AND DISPOSAL	REMOVAL OF GROUND MOUNTED BEAM SUPPORT AND DISPOSAL	REMOVAL OF OVERHEAD MOUNTED SIGN AND DISPOSAL	REMOVAL OF POLE MOUNTED SIGN AND DISPOSAL	REMOVAL OF OVERHEAD SIGN SUPPORT AND DISPOSAL, TYPE TC-12.30	REMOVAL OF LUMINAIRE AND DISPOSAL	REMOVAL OF DISCONNECT SWITCH AND DISPOSAL	REMOVAL OF BALLAST AND RDISPOSAL	REMOVAL OF SIGN WIRING AND DISPOSAL	REMOVAL OF SIGN SERVICE AND DISPOSAL
						EA	FT			FT	FT	FT		EA	EA	EA	EA	EA	SF	SF	SF	EA	EA	EA	EA	EA	EA	EA	EA	EA	EA	EA	EA	EA
	32			**SR 21**																													
40		12.01	LT	M2-1-21	21 X 15														2.19					1										
			LT	M1-5-3-30	24 X 30														5					1										
			LT	M5-1R-24	24 X 18														3					1										
			LT	M4-5-24	12 X 24														2					1										
			LT	M8-H3-24	24 X 24														4					1										
			LT	M5-1R-21	21 X 15														2.19					1										
41		12.23	LT	M3-3-30	30 X 15		13.75												3.13					1		1								
			LT	M1-5-2-30	30 X 30														6.25					1										
42		12.25	LT	M3-1														1	5										1					
			LT	M1-5-3-30	24 X 30													1	3										1					
			LT	M6-1L-24	24 X 18																													
43		12.25	RT	M1-5-2-24	24 X 24		13.25												4					1		1								
			RT	M6-4-21	21 X 15														2.19					1										
44		12.27	RT	M1-5-2-24	24 X 24		13.25												4					1		1								
			RT	M6-4-21	21 X 15														2.19					1										
45		12.27	RT	M3-1-30	30 X 15													1	3.13															
			RT	M1-5-3-30	30 X 37.5													1	7.81															
			RT	M6-1R-21	21 X 15													1	2.19															
46		12.27	RT	M3-1																				1										
			RT	M1-5-3																				1										
			RT	M6-1R																				1										
47		12.28	RT	M3-1-30	30 X 15		13.75												3.13					1		1								
			RT	M1-5-2-30	30 X 30														6.25					1										
48		12.34	LT	M1-5-3																				1		1								
			LT	M6-1L																				1										
48A		12.38	RT	I-H2E-40	40 X 20		12												20					1		2								
							12																											
49		12.39	LT	M4-5-24																				1										
			LT	M8-H3-24																				1										
			LT	M5-1L-21																				1										
50		12.47	LT	M2-1-21	21 X 15		15												2.19					1		1								
			LT	M1-5-3-30	24 X 30														5					1										
			LT	M5-1L-24	24 X 18														3					1										
TOTALS CARRIED TO SHEET 28						0	93	0	0	0	0	0	0	0	0	0	0	0	5	101	0	0	0	0	26	0	8	0	0	3	0	0	0	0	0	0

SR 21 SUM-SUMMARY

STA-21-8.25

26
40

\\Projects\STA-25453 (100363)\Sheets\Signs\STA25453d01.dgn 28-FEB-2007 8:46AM bbaughma

REF NO.	SHEET NO.	SLM	SIDE	CODE * PLYWOOD # YELLOW/GREEN ## WHITE ON BROWN	SIZE (INCHES)	625	630																									631				
						GROUND ROD	GROUND MOUNTED SUPPORT. NO. 3 POST			GROUND MOUNTED SUPPORT. W8X18 BEAM	GROUND MOUNTED SUPPORT. W10X22 BEAM	GROUND MOUNTED SUPPORT. W10X12 BEAM		BREAKAWAY BEAM CONNECTION	OVERHEAD SIGN SUPPORT. TYPE TC-12.30. DESIGN 5	OVERHEAD SIGN SUPPORT. TYPE TC-12.30. DESIGN 8	SIGN ATTACHMENT ASSEMBLY	SIGN SUPPORT ASSEMBLY. POLE MOUNTED	SIGN. FLAT SHEET	SIGN. GROUND MOUNTED EXTRUSHEET	SIGN. OVERHEAD EXTRUSHEET	GROUND MOUNTED BEAM SUPPORT FOUNDATION	RIGID OVERHEAD SIGN SUPPORT FOUNDATION	REMOVAL OF GROUND MOUNTED SIGN AND DISPOSAL	REMOVAL OF GROUND MOUNTED MAJOR SIGN AND DISPOSAL	REMOVAL OF GROUND MOUNTED POST SUPPORT AND DISPOSAL	REMOVAL OF GROUND MOUNTED BEAM SUPPORT AND DISPOSAL	REMOVAL OF OVERHEAD MOUNTED SIGN AND DISPOSAL	REMOVAL OF POLE MOUNTED SIGN AND DISPOSAL	REMOVAL OF OVERHEAD SIGN SUPPORT AND DISPOSAL, TYPE TC-12.30	REMOVAL OF LUMINAIRE AND DISPOSAL	REMOVAL OF DISCONNECT SWITCH AND DISPOSAL	REMOVAL OF BALLAST AND RDISPOSAL	REMOVAL OF SIGN WIRING AND DISPOSAL	REMOVAL OF SIGN SERVICE AND DISPOSAL
						EA	FT			FT	FT	FT		EA	EA	EA	EA	EA	SF	SF	SF	EA	EA	EA	EA	EA	EA	EA	EA	EA	EA	EA	EA	EA
	32			**SR 21**																														
51		12.47	LT	M4-5-24	12 X 24		15												2															
			LT	M8-H3-24	24 X 24														4															
			LT	M5-1R-21	21 X 15														2.19															
																		1	1					1					1					
52		12.64	LT	W3-3-36	36 X 36													1	1					1					1					
			RT	W3-3-36	36 X 36																													
	33									26				2						81		2				2								
53		12.77	LT	M2-H2A-108	108 X 108					28.1																								
																		9						1		1								
54		12.78	LT	W3-5-36	36 X 36		13												9						1		1								
55		12.79	MED	R3-4-36	36 X 36		13												5						1					1					
			MED	R3-H4A-24	24 X 30														9						1		1								
56		12.80	MED	R3-4-36	36 X 36		13												5						1					1					
			MED	R3-H4A-24	24 X 30														18						1		2								
57		12.98	RT	R2-H2B-36	36 X 72		16 16																												
																			1															
58		13.00	RT	D10-4H-12	12 X 12		9												1																
59		13.00	LT	D10-4H-12	12 X 12		9												12						1		2								
60		13.02	LT	R2-1-36	36 X 48		14 14												12						1		2								
			RT	R2-1-36	36 X 48		14 14												20						1		2								
61		13.06	RT	I-H2E-40	40 X 20		12 12												20						1		2								
62		13.09	LT	I-H2E-40	40 X 20		12 12																		1		1								
63		13.38	RT	D10-H4																					1		1								
			LT	D10-H4																															
	35			**INDIAN RIVER RD**															2.19																
64		4.88	LT	M2-1-21	21 X 15		13.25												4																
			LT	M1-5-2-24	24 X 24														16.5																
65		4.92	LT	M2-H7-66	66 X 36		13 13																												
				TOTALS CARRIED TO SHEET 28		0	248	0	0	55	0	0	0	2	0	0	0	2	154	81	0	2	0	14	1	15	2	0	2	0	0	0	0	0	0

SR 21 SUM-SUMMARY

CHECKED BY: ALP
INITIAL

STA-21-8.25

27
40

\Projects\STA-21-8.25\roadway sheets\5433s001.dgn 28-FEB-2007 8:47:AM straughmo

REF NO.	SHEET NO.	SLM	SIDE	CODE * PLYWOOD # YELLOW/GREEN ## WHITE ON BROWN	SIZE (INCHES)	625	630																						631				
						GROUND ROD	GROUND MOUNTED SUPPORT, NO. 3 POST			GROUND MOUNTED SUPPORT, W8X18 BEAM	GROUND MOUNTED SUPPORT, W10X22 BEAM	GROUND MOUNTED SUPPORT, W10X12 BEAM		BREAKAWAY BEAM CONNECTION	OVERHEAD SIGN SUPPORT, TYPE TC-12.30, DESIGN 5	OVERHEAD SIGN SUPPORT, TYPE TC-12.30, DESIGN 8	SIGN ATTACHMENT ASSEMBLY	SIGN SUPPORT ASSEMBLY, POLE MOUNTED	SIGN, FLAT SHEET	SIGN, GROUND MOUNTED EXTRUSHEET	SIGN, OVERHEAD EXTRUSHEET	GROUND MOUNTED BEAM SUPPORT FOUNDATION	RIGID OVERHEAD SIGN SUPPORT FOUNDATION	REMOVAL OF GROUND MOUNTED SIGN AND DISPOSAL	REMOVAL OF GROUND MOUNTED MAJOR SIGN AND DISPOSAL	REMOVAL OF GROUND MOUNTED POST SUPPORT AND DISPOSAL	REMOVAL OF GROUND MOUNTED BEAM SUPPORT AND DISPOSAL	REMOVAL OF OVERHEAD MOUNTED SIGN AND DISPOSAL	REMOVAL OF POLE MOUNTED SIGN AND DISPOSAL	REMOVAL OF OVERHEAD SIGN SUPPORT AND DISPOSAL TYPE TC-12.30	REMOVAL OF LUMINAIRE AND DISPOSAL	REMOVAL OF DISCONNECT SWITCH AND DISPOSAL	REMOVAL OF BALLAST AND RDISPOSAL	REMOVAL OF SIGN WIRING AND DISPOSAL	REMOVAL OF SIGN SERVICE AND DISPOSAL
						EA	FT			FT	FT	FT		EA	EA	EA	EA	EA	SF	SF	SF	EA	EA	EA	EA	EA	EA	EA	EA	EA	EA	EA	EA
	35			**INDIAN RIVER RD**																													
66		4.95	LT	M4-5-24	12 X 24													2					1										
			LT	M1-4-2-24	24 X 24													4					1										
			LT	M6-1L-21	21 X 15													2.19					1										
			LT	M3-3-24	12 X 24													2					1										
			LT	M1-5-2-24	24 X 24													4					1										
			LT	M6-1L-21	21 X 15													2.19					1										
67		4.97	LT	M4-5-24	12 X 24													2					1										
			LT	M1-4-2-24	24 X 24													4					1										
			LT	M6-1R-21	21 X 15													2.19					1										
			LT	M2-H7-66	66 X 36													16.5					1										
				ERIE ST																													
68	35	5.03	LT	M3-1-24	12 X 24													2					1										
			LT	M1-5-2-24	24 X 24													4					1										
			LT	M6-1L-21	21 X 15													2.19					1										
69		5.12	RT	M2-1-21	21 X 15		13.25											2.19															
			RT	M1-5-2-24	24 X 24													4															
70		5.08	RT	M2-H7-66	66 X 36		13											16.5															
							13																										
71		5.03	RT	M4-5-24	12 X 24													2					1										
			RT	M1-4-2-24	24 X 24													4					1										
			RT	M6-3-21	21 X 15													2.19					1										
			RT	M2-H7-66	66 X 36													16.5					1										
	36			**RAMP C**																													
72		10.19	RT	M1-5-3-30	24 X 30													5					1										
			RT	M6-4-24	24 X 18													3					1										
				RAMP B																													
73		10.00	LT	M1-5-3-30	24 X 30													5					1										
			LT	M6-4-24	24 X 18													3					1										
				OBERLIN AVE																													
74		4.10	LT	M2-H6-144	144 X 60											3				60						1							
75		4.16	LT	M2-H6-96	96 X 60											2				40						1			2	1	2	1	1
			LT	M2-H6-96	96 X 60											2				40						1			2	1	2	1	
				TOTAL SHEET 23		1	119								1		16		90		870		1	19		9		6		1	1			
				TOTAL SHEET 24		1	98				57			2		1	10		93	135	672	2	1	24	1	7	2	5		1	1			
				TOTAL SHEET 25			110			46		47		4					110	171		4		25	2	9	4							
				TOTAL SHEET 26			93											5	101					26		8			3					
				TOTAL SHEET 27			248			55				2				2	154	81		2		14	1	15	2		2					
				TOTALS CARRIED TO GENERAL SUMMARY		2	708	0	0	101	57	47	0	8	1	1	33	7	661	387	1682	8	2	129	4	48	8	14	5	2	6	2	4	2	1

CALCULATED: ALP
CHECKED:

SR 21 SUM-SUMMARY

STA-21-8.25

28
40

I:\Projects\STA\25433\Roadway\Sheets\Sum\25433ss001.dgn 08-FEB-2007 5:41:4M rthoughms

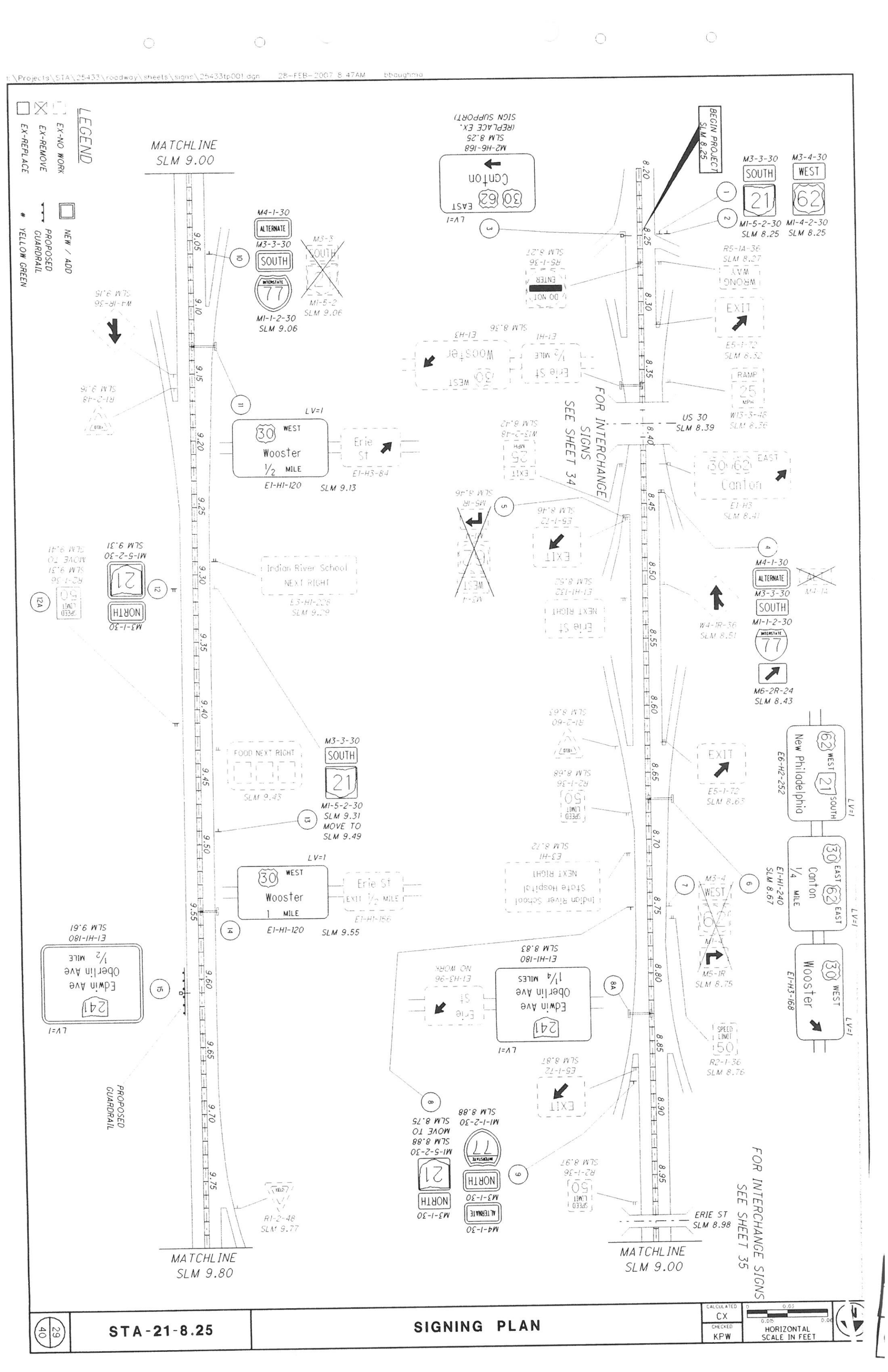

29/40	STA-21-8.25	SIGNING PLAN	CALCULATED CX	CHECKED KPW	0 0.03 0.06 0.09 HORIZONTAL SCALE IN FEET

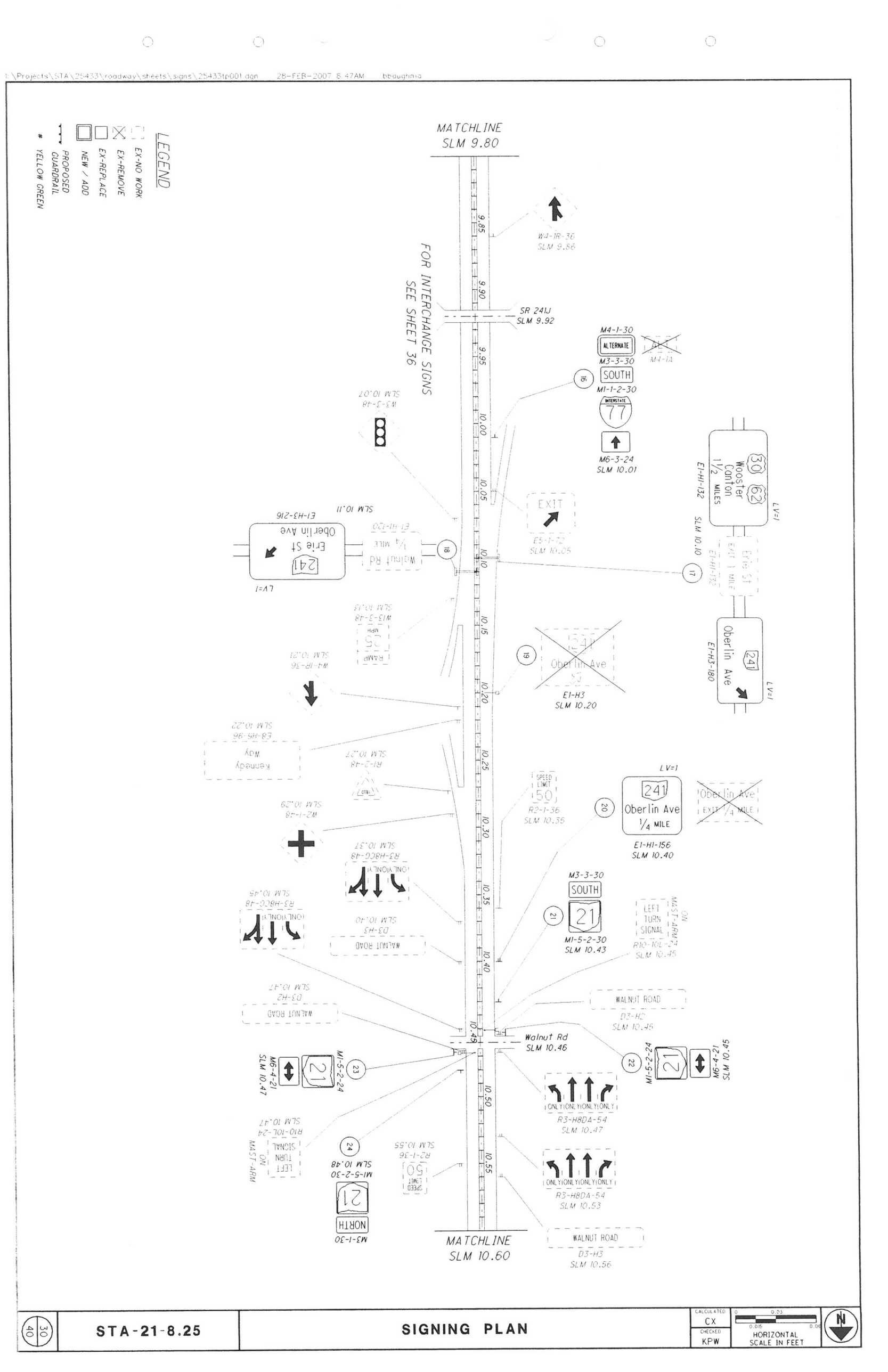

30/40	STA-21-8.25	SIGNING PLAN	CALCULATED CX / CHECKED KPW	HORIZONTAL SCALE IN FEET

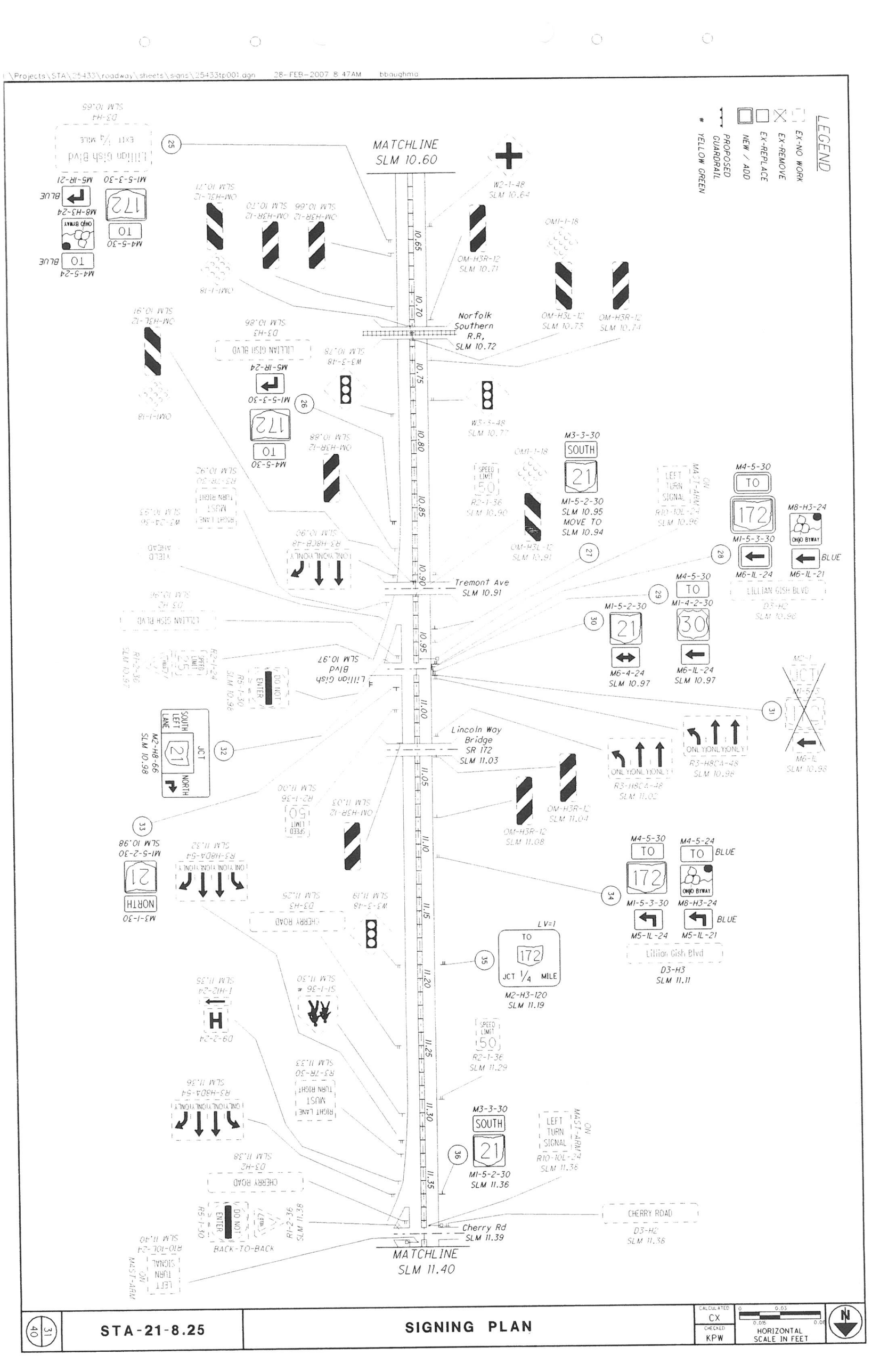
LEGEND
EX-NO WORK
EX-REMOVE
EX-REPLACE
NEW / ADD
PROPOSED GUARDRAIL
YELLOW GREEN
MATCHLINE SLM 10.60
MATCHLINE SLM 11.40
Norfolk Southern R.R, SLM 10.72
Tremont Ave SLM 10.91
Lincoln Way Bridge SR 172 SLM 11.03
Lillian Gish Blvd SLM 10.97
Cherry Rd SLM 11.39
CHERRY ROAD
D3-H2
SLM 11.38
Lillian Gish Blvd
D3-H3
SLM 11.11
BACK-TO-BACK
M3-3-30 SOUTH 21 M1-5-2-30 SLM 10.95 MOVE TO SLM 10.94
M3-3-30 SOUTH 21 M1-5-2-30 SLM 11.36
M4-5-30 TO 172 M1-5-3-30
M8-H3-24 OHIO BYWAY BLUE M6-1L-21
M4-5-24 TO BLUE OHIO BYWAY M8-H3-24 BLUE M5-1L-21
M4-5-30 TO 172 M1-5-3-30 SLM 10.98
M4-5-30 TO 172 M1-5-3-30
M4-5-24 TO BLUE OHIO BYWAY M8-H3-24 BLUE M5-1L-24 M5-1L-21
M4-5-30 TO M1-4-2-30 30 M6-1L-24 SLM 10.97
M1-5-2-30 21 M6-4-24 SLM 10.97
M6-1L SLM 10.98
M2-H8-66 SLM 10.98
M3-1-30 NORTH 21 M1-5-2-30 SLM 10.98
TO 172 JCT 1/4 MILE LV=1 M2-H3-120 SLM 11.19
M4-5-30 TO 172 M1-5-3-30 SLM 10.65
M4-5-24 TO BLUE OHIO BYWAY M8-H3-24 BLUE M5-1L-24 M5-1L-21
M4-5-30 TO 172 M1-5-3-30 SLM 10.88
M4-5-30 TO 172 M1-5-3-30 SLM 10.65
M4-5-24 TO BLUE OHIO BYWAY M8-H3-24 BLUE M5-1R-24 M5-1R-21
M4-5-30 TO 172 M1-5-3-30 SLM 10.65
M4-5-24 TO BLUE OHIO BYWAY M8-H3-24 BLUE M5-1R-24 M5-1R-21
SPEED LIMIT 50 R2-1-36 SLM 10.90
SPEED LIMIT 50 R2-1-36 SLM 11.29
SPEED LIMIT 50 R2-1-36 SLM 11.00
LEFT TURN SIGNAL R10-10L-24 SLM 10.96
LEFT TURN SIGNAL R10-10L-24 SLM 11.36
MAST-ARM ON
ONLY LEFT TURN SIGNAL R10-10L-24 SLM 11.40
MAST-ARM ON
R3-H8CA-48 SLM 10.96
R3-H8CA-48 SLM 11.02
R3-H8CA-48 SLM 10.98
R3-H8DA-48 SLM 10.90
R3-H8DA-54 SLM 11.32
R3-H8DA-54 SLM 11.36
R3-7R-30 SLM 10.92
R3-7R-30 SLM 11.33
R3-8R-24 SLM 10.53
R3-8R-24 SLM 10.96
R1-2-36 SLM 10.97
R2-1-24 SLM 10.96
R5-1-30 SLM 10.96
R5-1-30 SLM 11.36
R9-2-24
I-H12-24 SLM 11.35
SI-1-36 # SLM 11.30
M3-3-48 SLM 10.77
M3-3-48 SLM 11.18
M3-3-48 SLM 10.78
OM-H3R-12 SLM 10.71
OM-H3R-12 SLM 10.66
OM-H3R-12 SLM 10.70
OM-H3L-12 SLM 10.71
OM-H3L-12 SLM 10.73
OM-H3R-12 SLM 10.74
OM-H3L-12 SLM 10.91
OM-H3R-12 SLM 10.88
OM-H3L-12 SLM 10.91
OM-H3R-12 SLM 11.04
OM-H3R-12 SLM 11.08
OM-H3R-12 SLM 11.03
OM-I-18
W2-1-48 SLM 10.64
D3-H4 SLM 10.65
D3-H3 SLM 10.86
D3-H2 SLM 10.96
D3-H3 SLM 11.25
D3-H2 SLM 11.38
M2-2-24 SLM 10.53
M2-2-24 SLM 10.92
M2-2-24 SLM 11.32
M2-2-24 SLM 11.33
M2-2-24 SLM 11.36
M2-2-24 SLM 11.38
M2-1 JCT M1-5-5 SLM 10.98
M6-1L SLM 10.98
ONLY LEFT TURN SIGNAL
MUST RIGHT LANE TURN RIGHT
ENTER DO NOT
SOUTH LEFT LANE JCT 21 NORTH
Lillian Gish Blvd Exit 1/4 MILE D3-H4 SLM 10.65
CALCULATED CX
CHECKED KPW
HORIZONTAL SCALE IN FEET
0 0.03 0.015 0.06
N
STA-21-8.25
SIGNING PLAN
31 40

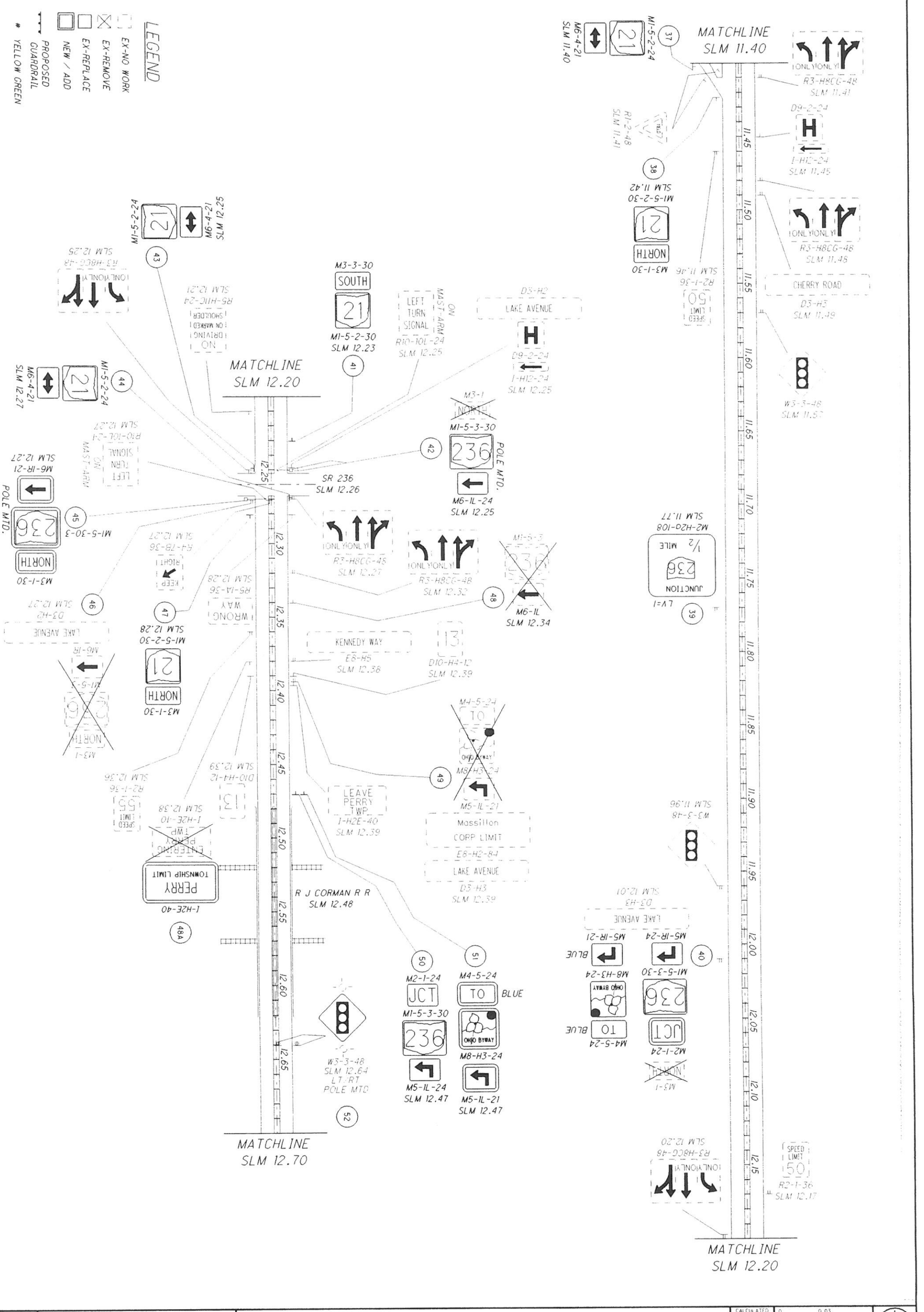

32/40	STA-21-8.25	SIGNING PLAN	CALCULATED CX CHECKED KPW	HORIZONTAL SCALE IN FEET

LEGEND

- EX-NO WORK
- EX-REMOVE
- EX-REPLACE
- NEW / ADD
- PROPOSED GUARDRAIL
- * YELLOW GREEN

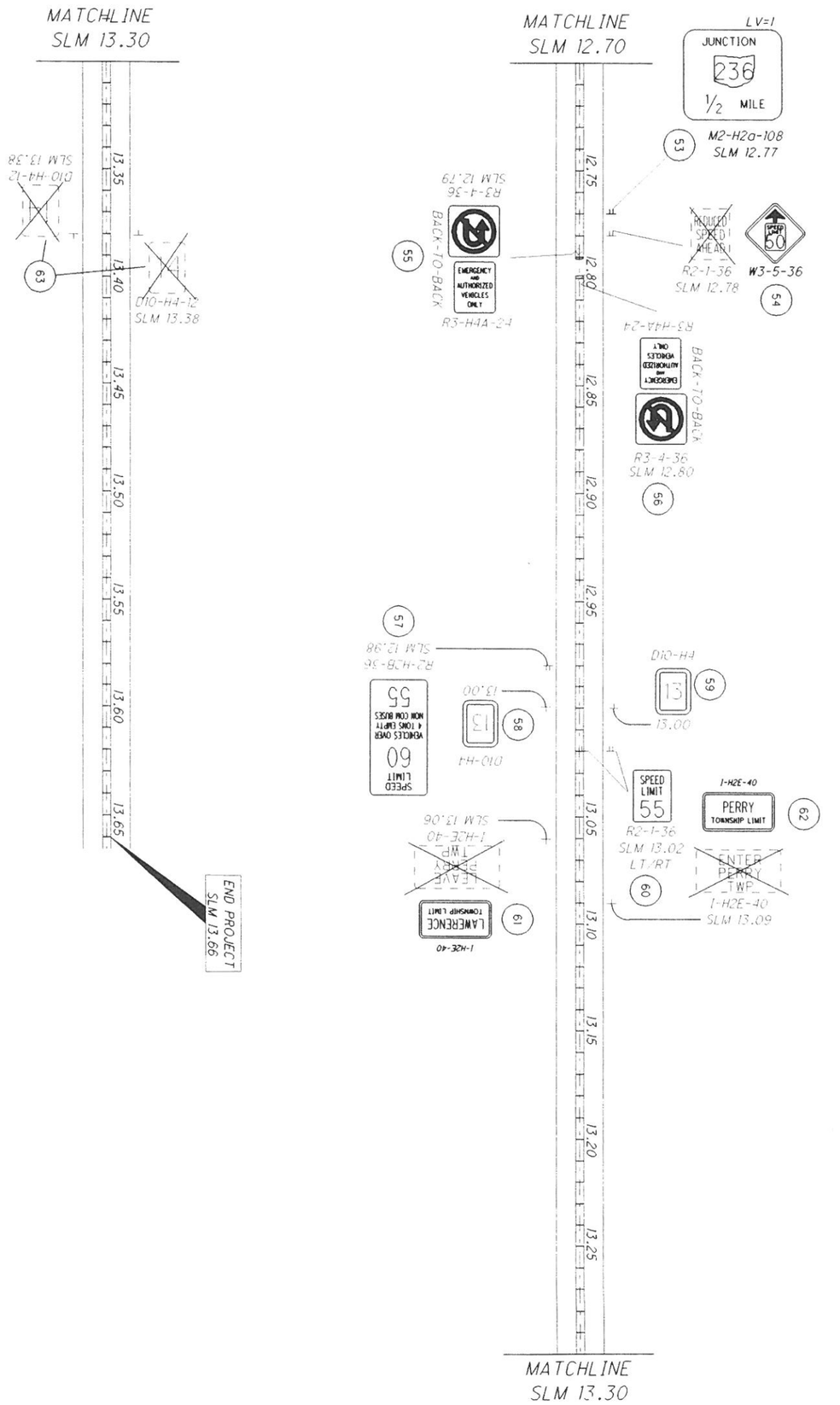

33 / 40	STA-21-8.25	SIGNING PLAN	CALCULATED CX / CHECKED KPW	0 0.03 0.04 0.08 HORIZONTAL SCALE IN FEET

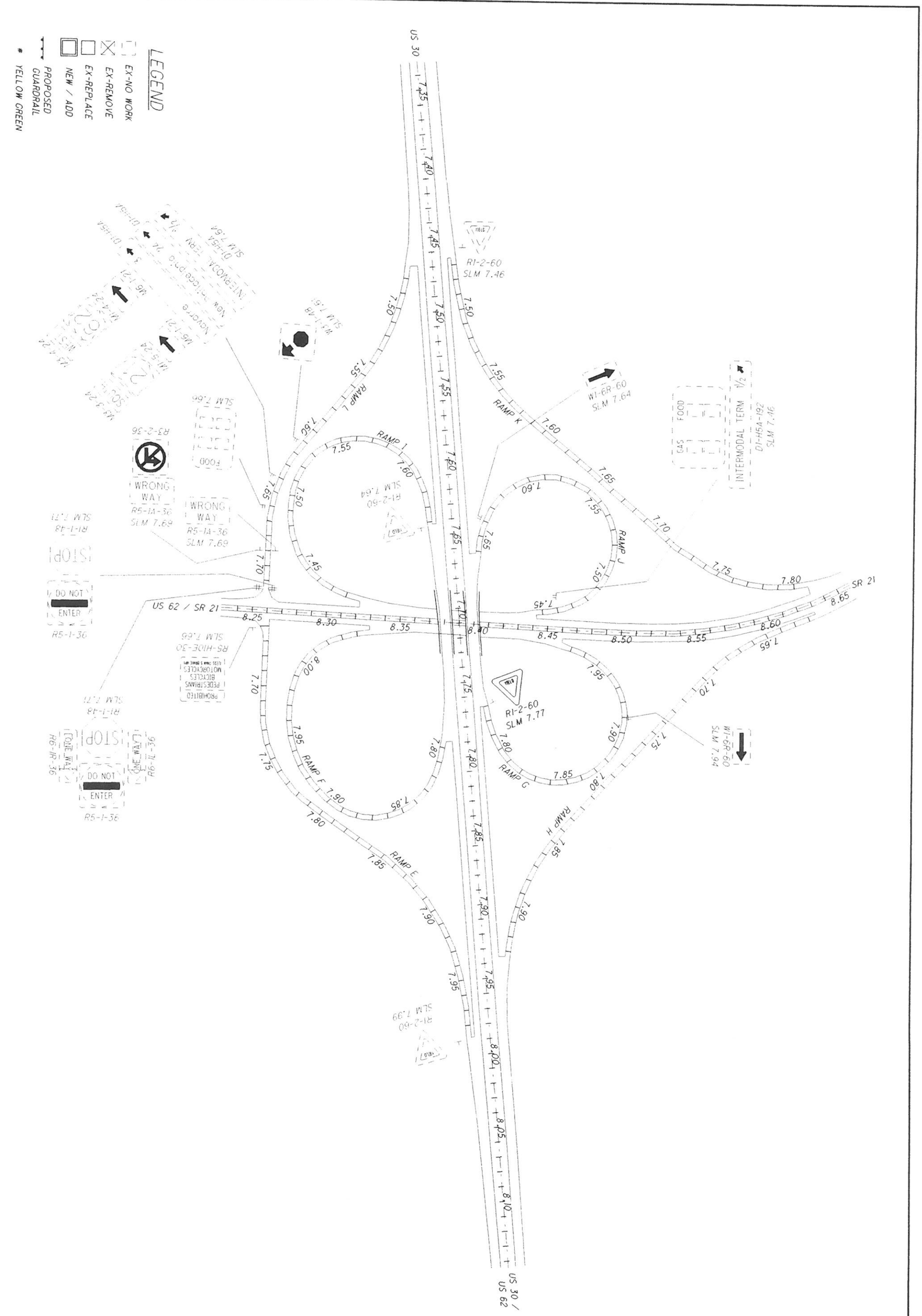
LEGEND
EX-NO WORK
EX-REMOVE
EX-REPLACE
NEW / ADD
PROPOSED GUARDRAIL
* YELLOW GREEN
US 30
US 62 / SR 21
SR 21
US 30 / US 62
RAMP I
RAMP J
RAMP K
RAMP E
RAMP F
RAMP G
RAMP H
R1-2-60 SLM 7.46
R1-2-60 SLM 7.77
R1-2-60 SLM 7.99
W1-6R-60 SLM 7.64
W1-6R-60 SLM 7.94
INTERMODAL TERM
D1-H5A-192 SLM 7.46
WRONG WAY R5-1A-36 SLM 7.69
DO NOT ENTER R5-1-36
ONE WAY R6-1R-36
R3-2-36
R5-H10E-30
SLM 7.66
SLM 7.71
SLM 7.73
SLM 7.74
SLM 7.76
SLM 7.78
SLM 7.79
SLM 7.81
SLM 7.84
SLM 7.86
SLM 7.89
SLM 7.91
SLM 7.94
SLM 7.96
SLM 7.99
SLM 8.01
SLM 8.04
SLM 8.06
SLM 8.09
SLM 8.11
SLM 8.14
SLM 8.16
SLM 8.19
SLM 8.21
SLM 8.24
SLM 8.26
SLM

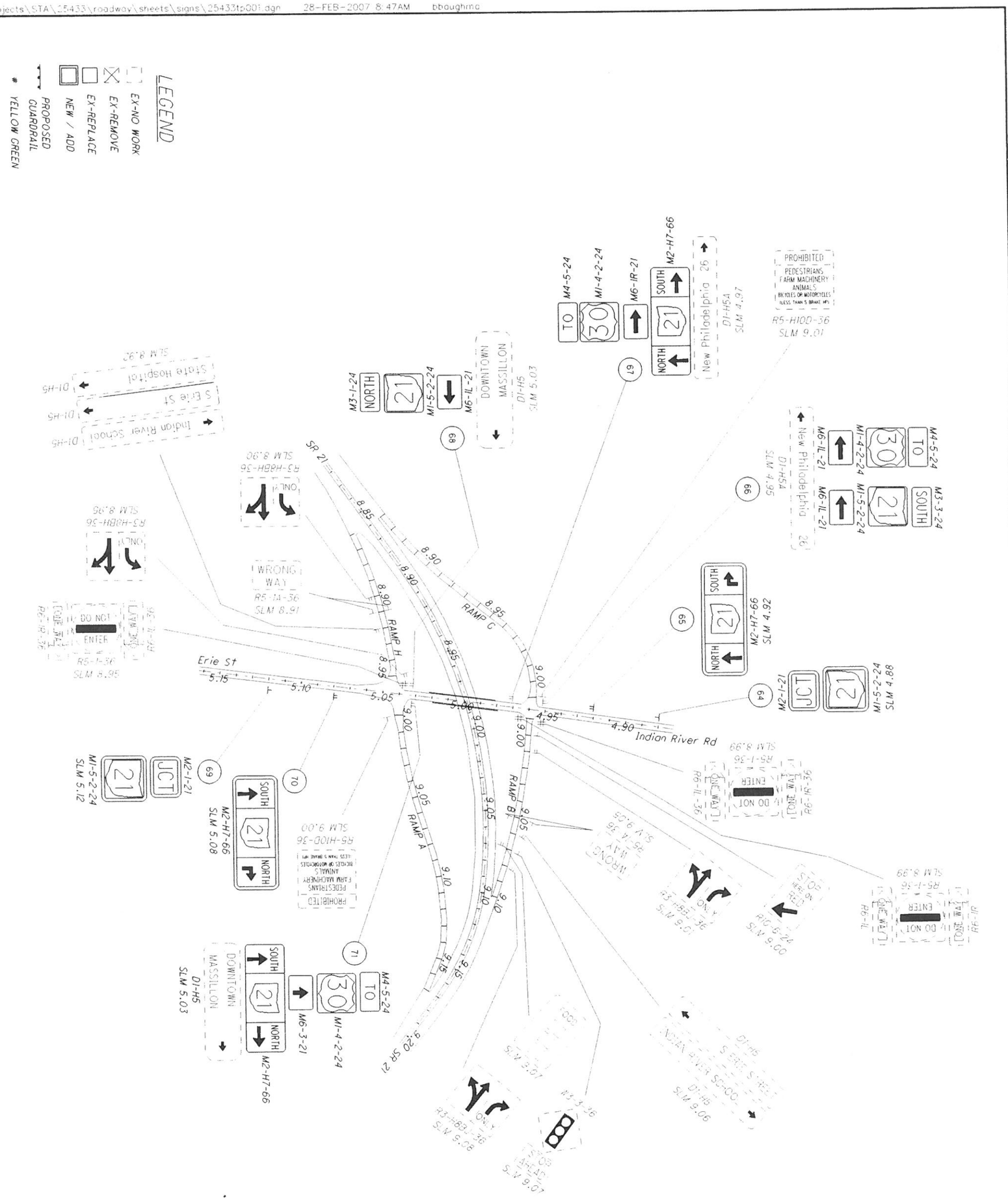

STA-21-8.25

SIGNING PLAN

CALCULATED CX
CHECKED KPW

0 0.03
0.015 0.06
HORIZONTAL SCALE IN FEET

N

HORIZONTAL SCALE IN FEET
0 0.03 0.06
0 0.015

CALCULATED CX
CHECKED KPW

SIGNING PLAN

STA-21-8.25

36
40

\\Projects\STA\25433\roadway\sheets\signs\25433tg001.dgn 28-FEB-2007 8:47AM tbaughma

SIGN No. 3
SLM 8.25, SR 21 NB
TC-12.30, DESIGN 5
POLE = 27'
ARM = 20'
(REPLACE EXISTING SIGN SUPPORT)

SIGN No. 6
SLM 8.67, SR 21 SB & RAMP "K"
EXISTING TC-7.65, DESIGN 6

CALCULATED CX
CHECKED KPW

ELEVATION VIEWS

8.25

ts\signs\25433g001.dgn 28-FEB-2007 8:47AM bbaughma

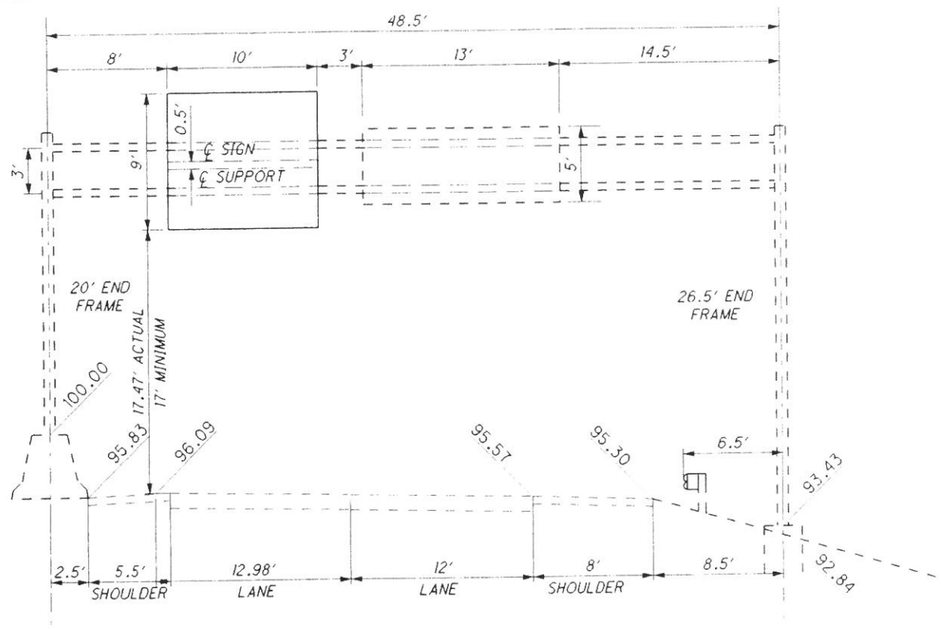

SIGN No. 14
SLM 9.55, US 21 SB
EXISTING TC-7.65, DESIGN 6

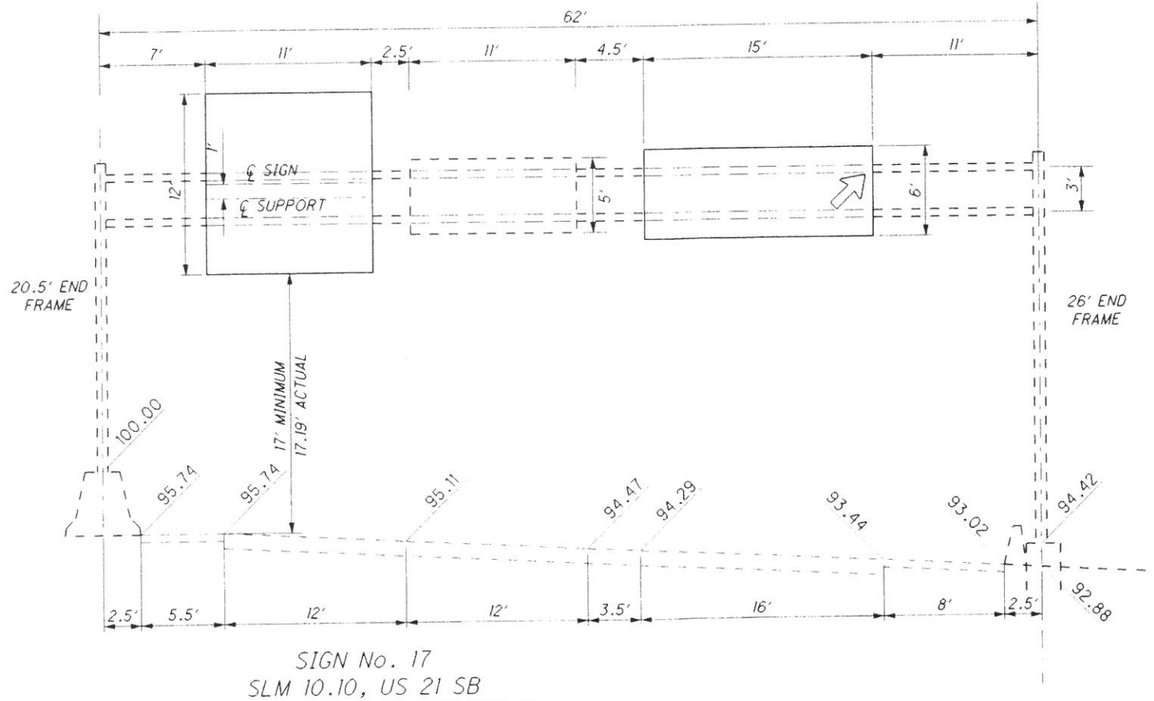

SIGN No. 17
SLM 10.10, US 21 SB
EXISTING TC-7.65, DESIGN 6

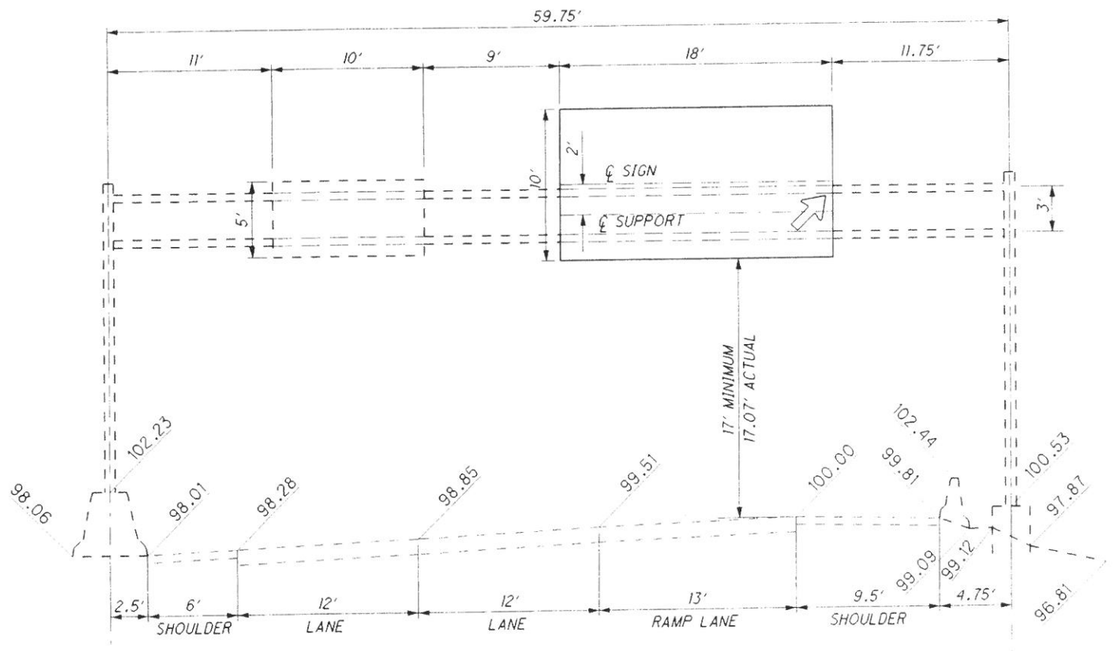

SIGN No. 18
SLM 10.11, US 21 NB
TC-7.65, DESIGN 6

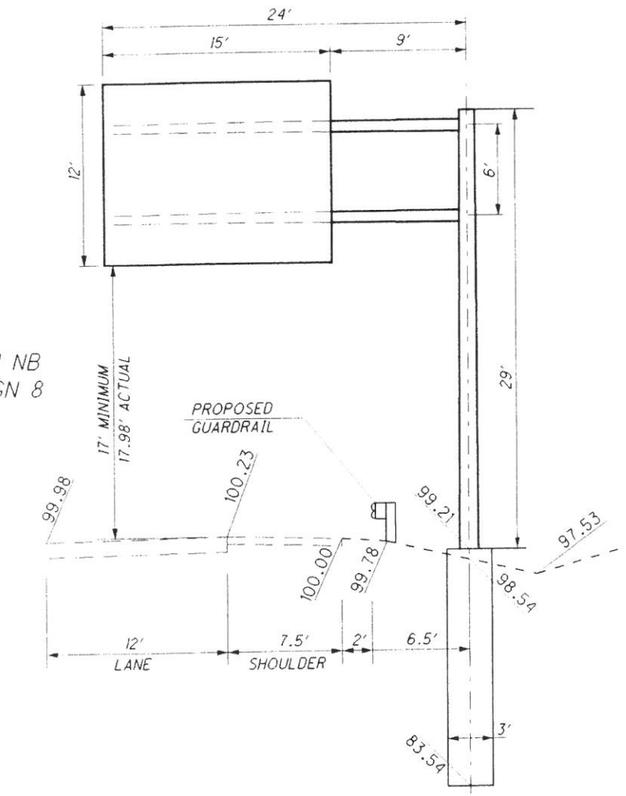

SIGN No. 15
SLM 9.61, SR 21 NB
TC-12.30, DESIGN 8
POLE = 29'
ARM = 24'

CALCULATED CX
CHECKED KPW

ELEVATION VIEWS

STA-21-8.25

38
40

\Projects\STA\25433\roadway\sheets\signs\25433sx001.dgn 28-FEB-2007 8:47AM bbaughma

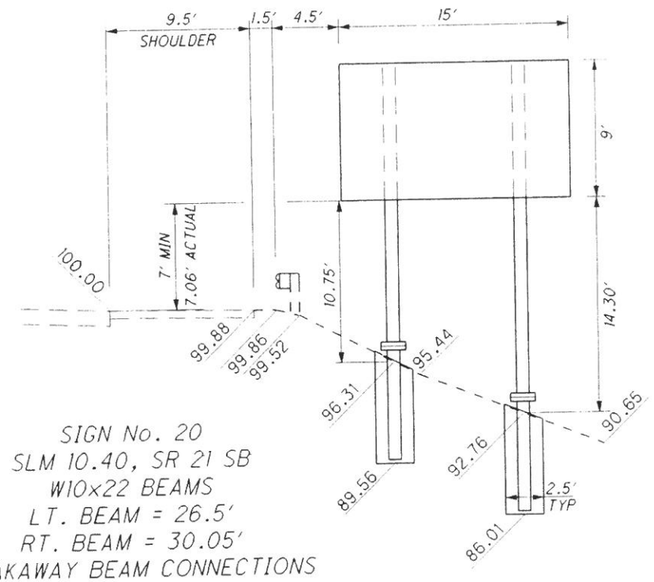

SIGN No. 20
SLM 10.40, SR 21 SB
W10x22 BEAMS
LT. BEAM = 26.5'
RT. BEAM = 30.05'
BREAKAWAY BEAM CONNECTIONS

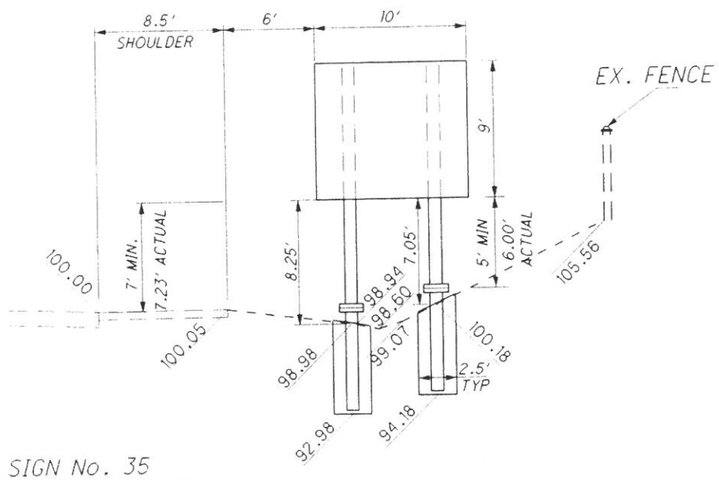

SIGN No. 35
SLM 11.19, SR 21 SB
W8x18 BEAMS
LT. BEAM = 23.25'
RT. BEAM = 22.05'
BREAKAWAY BEAM CONNECTIONS

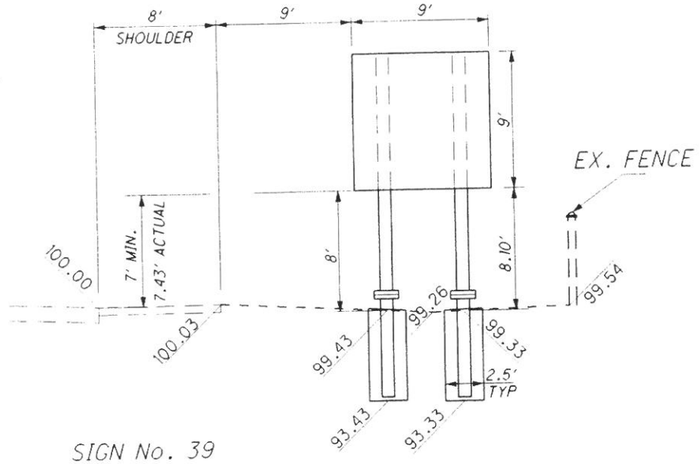

SIGN No. 39
SLM 11.77, SR 21 NB
W10x12 BEAMS
LT. BEAM = 23'
RT. BEAM = 23.1'
BREAKAWAY BEAM CONNECTIONS

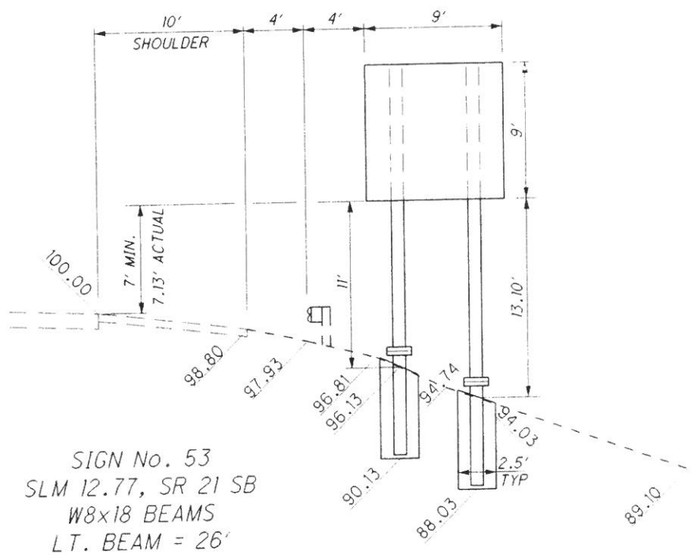

SIGN No. 53
SLM 12.77, SR 21 SB
W8x18 BEAMS
LT. BEAM = 26'
RT. BEAM = 28.1'
BREAKAWAY BEAM CONNECTIONS

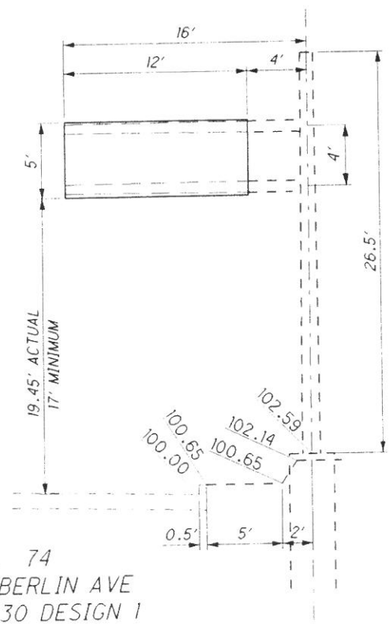

SIGN No. 74
SLM 4.10, EB OBERLIN AVE
EXISTING TC-12.30 DESIGN 1
POLE = 26.5'
ARM = 16'

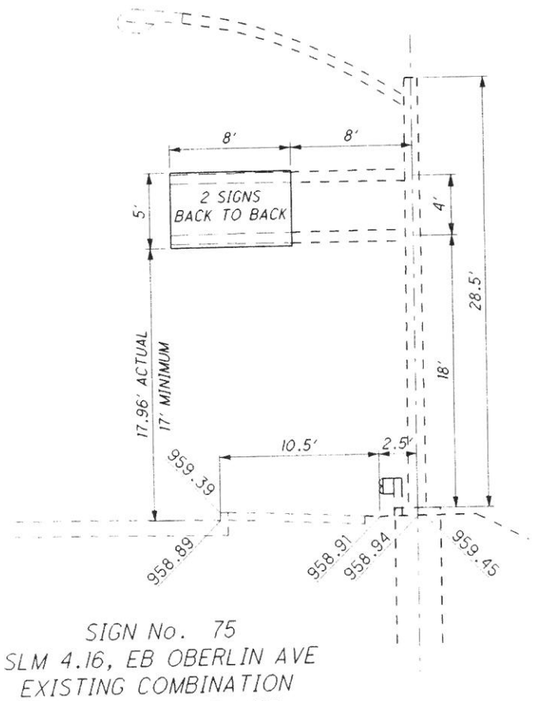

SIGN No. 75
SLM 4.16, EB OBERLIN AVE
EXISTING COMBINATION
12.24 DESIGN 3 MOD
POLE = 28.5'
ARM = 16'

CALCULATED CX
CHECKED KPW

ELEVATION VIEWS

STA-21-8.25

39
40

\Projects\STA\25422\roadway\sheets\signs\25423g001.dgn 28-FEB-2007 8:47AM bloughma

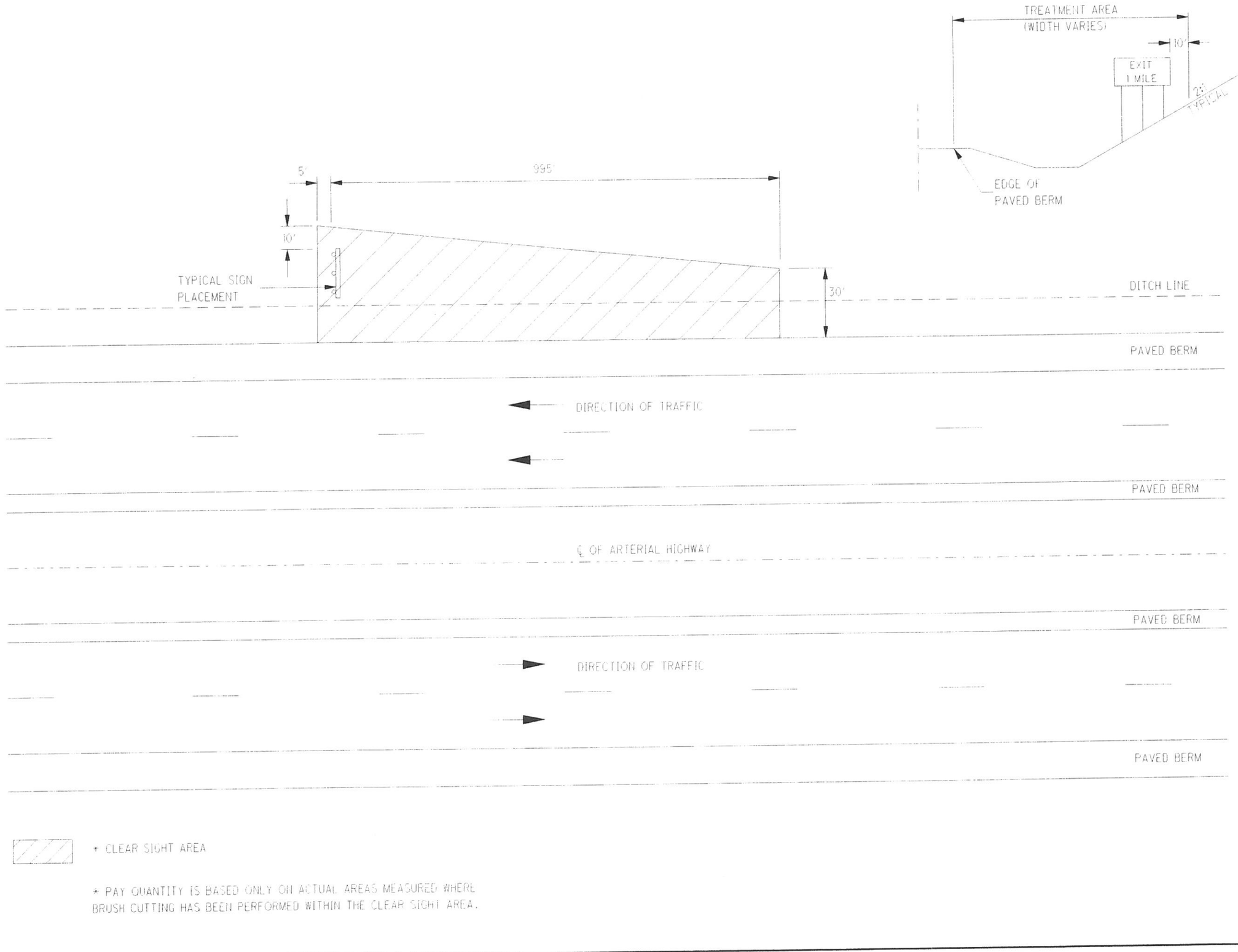

+ CLEAR SIGHT AREA

+ PAY QUANTITY IS BASED ONLY ON ACTUAL AREAS MEASURED WHERE BRUSH CUTTING HAS BEEN PERFORMED WITHIN THE CLEAR SIGHT AREA.

HORIZONTAL SCALE IN FEET

CALCULATED CX
CHECKED KPW

BRUSH CUT AND TREATED DETAIL

STA-21-8.25

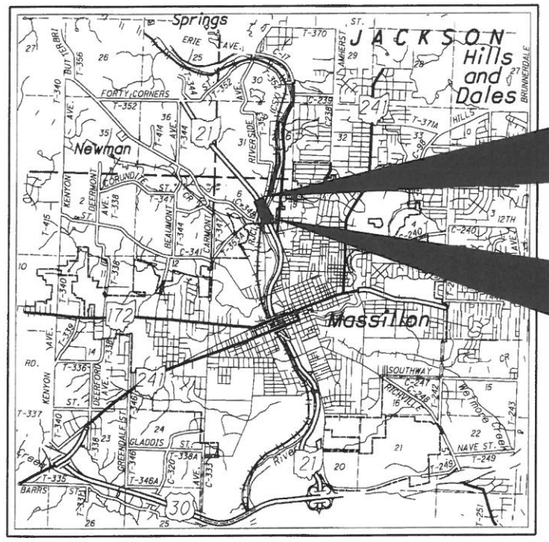

LOCATION MAP

LATITUDE: N40°49'00" LONGITUDE: W81°31'50"

SCALE IN MILES

0 1 2 3 4

N

PORTION TO BE IMPROVED

INTERSTATE & DIVIDED HIGHWAY

UNDIVIDED STATE & FEDERAL ROUTES

OTHER ROADS

DESIGN DESIGNATION

CURRENT ADT (2007)	12200
DESIGN YEAR ADT (2027)	15700
DESIGN HOURLY VOLUME (2027)	1413
DIRECTIONAL DISTRIBUTION	60%
TRUCKS (24 HOUR B&C)	15%
DESIGN SPEED	60 MPH
LEGAL SPEED	60 MPH
(50 MPH WITHIN MASSILLON CITY LIMITS)	
DESIGN FUNCTIONAL CLASSIFICATION:	
ARTERIAL (URBAN)	

DESIGN EXCEPTIONS

NONE REQUIRED

UNDERGROUND UTILITIES

CONTACT BOTH SERVICES
CALL TWO WORKING DAYS
BEFORE YOU DIG

CALL
1-800-362-2764
(TOLL FREE)
OHIO UTILITIES PROTECTION SERVICE
NON-MEMBERS
MUST BE CALLED DIRECTLY

OIL & GAS PRODUCERS PROTECTIVE SERVICE CALL: 1-800-929-0988

PLAN PREPARED BY:

KORDA

KORDA/NEMETH ENGINEERING, INC - CONSULTING ENGINEERS
1650 Watermark Drive, Suite 200 - Columbus Oh 43215-7010
TEL. 614-487-1650 FAX 614-487-8981 WEB www.korda.com

ENGINEERS SEAL:	ENGINEERS SEAL:
KORDA (ROADWAY)	GPD (MOT & TRAFFIC CONTROL)
STATE OF OHIO · RONALD W. EIFERT 29283 · REGISTERED PROFESSIONAL ENGINEER	STATE OF OHIO · MICHAEL A. HOBBS E-68713 · REGISTERED PROFESSIONAL ENGINEER
SIGNED: RW Eifert	SIGNED: Michael A Hobbs
DATE: 2/12/2007	DATE: 2/7/07
ENGINEERS SEAL:	ENGINEERS SEAL:
KORDA (STRUCTURES OVER 20 FT)	GPD (STRUCTURES OVER 20 FT)
STATE OF OHIO · JK SANT 032872 · REGISTERED PROFESSIONAL ENGINEER	STATE OF OHIO · GIN GIM NG 55978 · REGISTERED PROFESSIONAL ENGINEER
SIGNED: JK Sant	SIGNED:
DATE: 2/12/2007	DATE: 2/7/2007

STATE OF OHIO

DEPARTMENT OF TRANSPORTATION

STA-21-12.48
PART 2

RECONSTRUCTION OF EXISTING SEPARATED CROSSING WITH THE R.J. CORMAN RAILROAD COMPANY
CITY OF MASSILLON
PERRY TOWNSHIP
STARK COUNTY

FOR PART 1, SEE STA-21-8.25

INDEX OF SHEETS:

TITLE SHEET	1
CENTERLINE REFERENCES AND BENCHMARKS	2
TYPICAL SECTIONS	3,3A
GENERAL NOTES	4-6
MAINTENANCE OF TRAFFIC	7-57
GENERAL SUMMARY	58,58A
PROJECT SITE PLAN	59
EARTHWORK SUMMARY	60
PLAN AND PROFILE	61-67
CROSS SECTIONS	68-79
STORM SEWER PROFILES	80
TRAFFIC CONTROL	81-90
STRUCTRUES OVER 20 FT	91-123,106A
RIGHT OF WAY	124
SHEET 21 NOT USED	

STANDARD CONSTRUCTION DRAWINGS	SUPPLEMENTAL SPECIFICATIONS
SEE PART 1	SEE PART 1
	SPECIAL PROVISIONS
	SEE PART 1

PROJECT DESCRIPTION

IMPROVEMENT OF 0.17 OF A MILE OF STATE ROUTE 21 BY MAJOR REHABILITATION OF TWIN STRUCTURES, BRIDGE NOS. : STA-21-12.48 LEFT AND RIGHT, OVER TUSCARAWAS RIVER, R.J. CORMAN RAILROAD, AND T.R. 353, INCLUDING DECK, PIER CAP AND APPROACH SLAB REPLACEMENTS AND RECONSTRUCTION OF APPROACH ROADWAY.

PROJECT EDA = 6.46 ACRES
CONTRACTOR EDA = 1.00 ACRES
NOI EDA = 7.50 ACRES

LIMITED ACCESS

THIS IMPROVEMENT IS ESPECIALLY DESIGNED FOR THROUGH TRAFFIC AND HAS BEEN DECLARED A LIMITED ACCESS HIGHWAY OR FREEWAY BY ACTION OF THE DIRECTOR IN ACCORDANCE WITH THE PROVISIONS OF SECTION 5511.02 OF THE OHIO REVISED CODE.

2005 SPECIFICATIONS

THE STANDARD SPECIFICATIONS OF THE STATE OF OHIO, DEPARTMENT OF TRANSPORTATION, INCLUDING CHANGES AND SUPPLEMENTAL SPECIFICATIONS LISTED IN THE PROPOSAL SHALL GOVERN THIS IMPROVEMENT.

I HEREBY APPROVE THESE PLANS AND DECLARE THAT THE MAKING OF THIS IMPROVEMENT WILL NOT REQUIRE THE CLOSING TO TRAFFIC OF THE HIGHWAY AND THAT PROVISIONS FOR THE MAINTENANCE AND SAFETY OF TRAFFIC WILL BE AS SET FORTH ON THE PLANS AND ESTIMATES.

APPROVED John Averyson
DATE 2/27/2007 DISTRICT DEPUTY DIRECTOR

APPROVED _____
DATE _____ DIRECTOR, DEPARTMENT OF TRANSPORTATION

FEDERAL PROJECT NO. E032185

PID NO. 25433

CONSTRUCTION PROJECT NO.

RAILROAD INVOLVEMENT R.J. CORMAN RAILROAD

STA-21-12.48

2/7/2007 1:48:44 PM
H:\Projects\2006\2006-0007 STA-21-12.48 Part 2\Civil\Drawings\Front-End Sheets\25433GT001.dgn
25433GT001.dgn

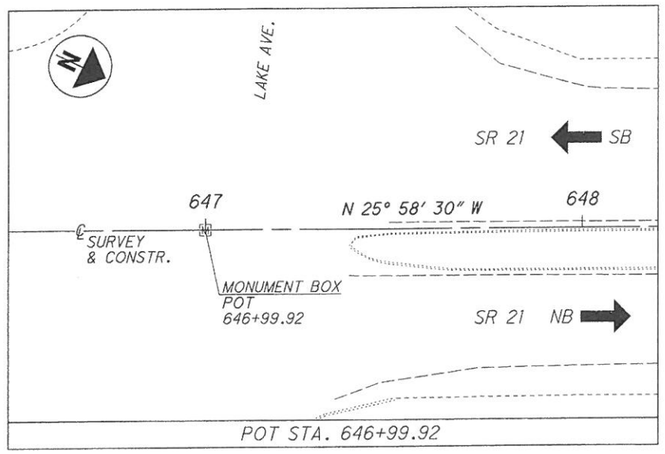

CENTERLINE OF SURVEY CONTROL S.R. 21					
STATION	OFFSET	SIDE	STATE PLANE COORDINATES		DESCRIPTIONS
			NORTHING	EASTING	
646+99.92	0.00	℄	418764.99	2237745.88	℄ MONUMENT FOUND
654+13.50	0.00	℄	419406.49	2237433.35	℄ MONUMENT FOUND
666+25.00	0.00	℄	420494.78	2236901.07	℄ MONUMENT SET
671+00.00	0.00	℄	420910.07	2236670.66	℄ MONUMENT SET

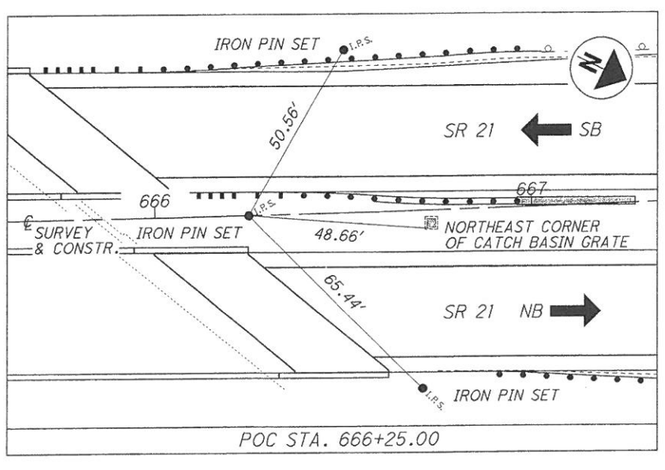

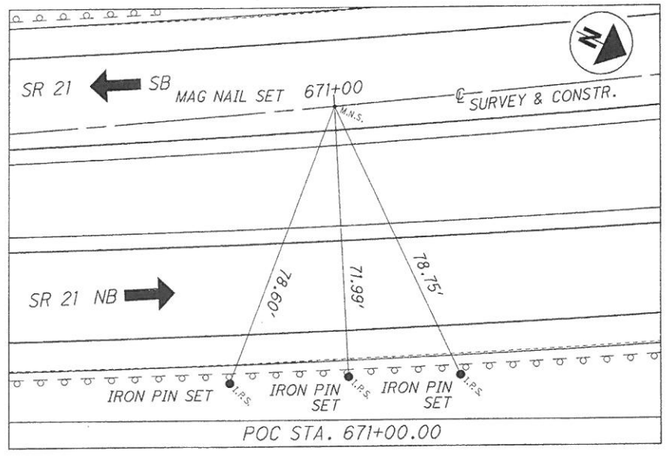

BM#1 ELEV. 991.98
IRON PIN SET
STA.672+55 35.08′ RT

BM#2 ELEV. 980.46
IRON PIN SET
STA. 666+51 0.30′ RT

BM#8 ELEV. 949.86
MINE SPIKE SET
STA. 664+68 1.87′ LT

BM Y305 ELEV. 938.32
VERTICALLY SET BRASS DISK IN PIER WALL
STA. 664+63 31.88′ RT

BM#3 ELEV. 956.60
IRON PIN SET
STA. 657+48 4.45′ RT

BM#4 ELEV. 946.37
IRON PIN SET IN MONUMENT BOX
STA. 654+13.5 0.00′ RT

CENTERLINE REFERENCES AND BENCHMARKS

CALCULATED CLP
CHECKED SAN

STA-21-12.48

H:\Projects\2006\2006-0007 STA-21-12.48 Part 2\Civil\Drawings\Front-End Sheets\254336C001.dgn
2/12/2007 1:47:33 PM
254336C001.dgn

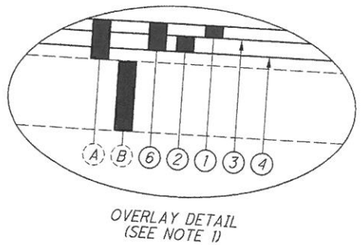

OVERLAY DETAIL
(SEE NOTE 1)

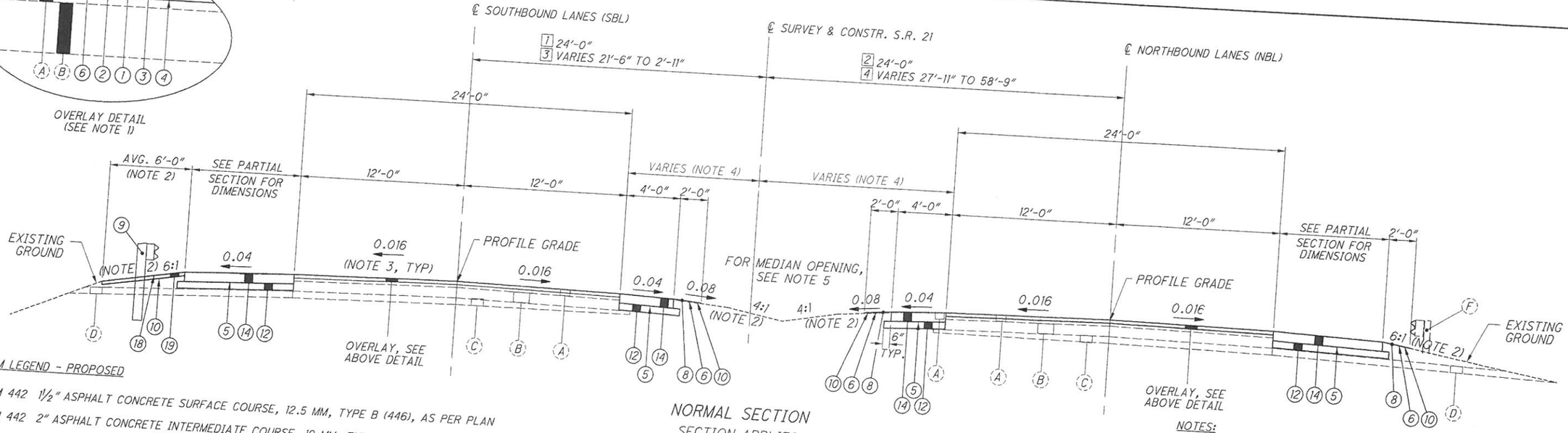

ITEM LEGEND - PROPOSED

(1) ITEM 442 1½" ASPHALT CONCRETE SURFACE COURSE, 12.5 MM, TYPE B (446), AS PER PLAN
(2) ITEM 442 2" ASPHALT CONCRETE INTERMEDIATE COURSE, 19 MM, TYPE B (446)
(3) ITEM 407 TACK COAT FOR INTERMEDIATE COURSE (0.04 GAL/SY)
(4) ITEM 407 TACK COAT (0.075 GAL/SY)
(5) ITEM 408 PRIME COAT (0.40 GAL/SY)
(6) ITEM 408 PRIME COAT (0.40 GAL/SY), AS PER PLAN
(7) ITEM 254 PAVEMENT PLANING, ASPHALT CONCRETE, 3½" AVERAGE DEPTH (SEE NOTE 1)
(8) ITEM 617 2" COMPACTED AGGERATE, AS PER PLAN (2' WIDTH)
(9) ITEM 606 GUARDRAIL, TYPE 5
(10) ITEM 204 SUBGRADE COMPACTION
(11) ITEM 526 REINFORCED CONCRETE APPROACH SLAB (T=15"), AS PER PLAN
(12) ITEM 304 6" AGGREGATE BASE, AS PER PLAN
(13) ITEM 305 9" CONCRETE BASE
(14) ITEM 301 8" ASPHALT CONCRETE BASE
(15) ITEM 442 ASPHALT CONCRETE INTERMEDIATE COURSE, 19MM, TYPE B (448), (VARIABLE DEPTH, APPROX. 1¾")
(16) ITEM 605 6" UNCLASSIFIED PIPE UNDERDRAIN
(17) ITEM 609 - CURB, TYPE 2-B
(18) ITEM 209 - LINEAR GRADING, AS PER PLAN
(19) ITEM 448 - 3" ASPHALT CONCRETE INTERMEDIATE COURSE, TYPE 1, PG 64-22, UNDER GUARDRAIL, AS PER PLAN.

ITEM LEGEND - EXISTING

(A) EXISTING 5"± ASPHALT CONCRETE
(B) EXISTING 9"± REINFORCED PORTLAND CEMENT CONCRETE PAVEMENT
(C) EXISTING AGGREGATE SUBBASE VARIES 3" TO 6"
(D) EXISTING 6"± AGGREGATE DRAINS
(E) EXISTING CONCRETE APPROACH SLAB (T=13")
(F) EXISTING GUARDRAIL

NORMAL SECTION

SECTION APPLIES:

1 SB STA. 651+20.00 TO STA. 657+75.00 = 655.00 L.F.
2 NB STA. 649+30.00 TO STA. 658+25.00 = 895.00 L.F.
3 SB STA. 666+50.00 TO STA. 673+10.00 = 660.00 L.F.
4 NB STA. 667+00.00 TO STA. 676+25.00 = 925.00 L.F.

TOTAL = 3135.00 L.F.

NOTES:

1. EXISTING PAVEMENT SHALL BE PLANED AT A VARIABLE DEPTH TO BRING THE SURFACE TO 3½" BELOW AND PARALLEL TO THE PROPOSED PAVEMENT SURFACE.
2. UNLESS OTHERWISE SHOWN ON THE CROSS SECTIONS.
3. OR MATCH EXISTING.
4. SEE PLAN & PROFILE FOR DETAILS
5. FOR MEDIAN OPENING (STA 652+12), USE SHOULDER PAVEMENT BUILDUP EXTENDED AT SAME CROSS SLOPE.

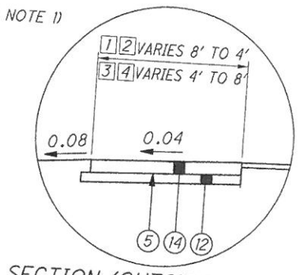

PARTIAL SECTION (OUTSIDE SHOULDER)

(SIMILAR FOR RIGHT SIDE)

SECTION APPLIES:

1 SB STA. 656+75.00 TO STA. 657+75.00
2 NB STA. 657+25.00 TO STA. 658+25.00
3 SB STA. 666+50.00 TO STA. 667+00.00
4 NB STA. 667+00.00 TO STA. 668+00.00

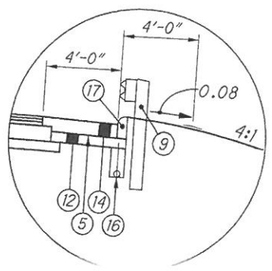

PARTIAL SECTION (CURB)

(SIMILAR FOR LEFT SIDE)

SECTION APPLIES:

SB STA. 657+74.00 TO STA. 658+01.00
NB STA. 658+29.00 TO STA. 658+59.00
SB STA. 658+12.00 TO STA. 658+38.00
NB STA. 658+70.00 TO STA. 659+00.00

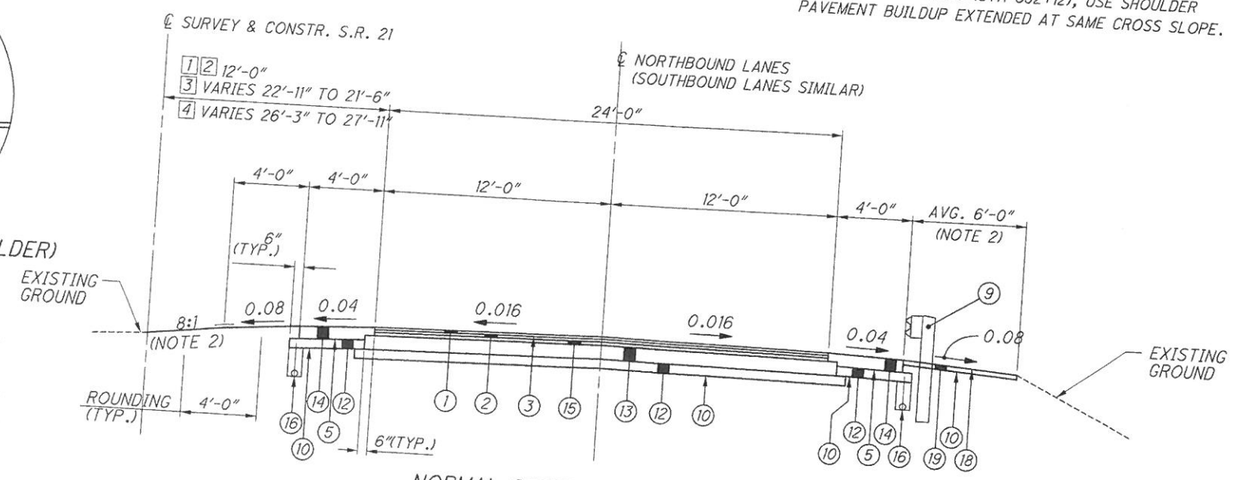

NORMAL SECTION (PAVEMENT REPLACEMENT)

SECTION APPLIES:

1 SB STA. 657+75.00 TO STA. 658+19.53 = 44.53 L.F.
2 NB STA. 658+25.00 TO STA. 658+77.49 = 52.49 L.F.
3 SB STA. 666+85.65 TO STA. 666+50.00 = 64.35 L.F.
4 NB STA. 666+43.61 TO STA. 666+00.00 = 56.39 L.F.

TYPICAL SECTIONS

STA-21-12.48

H:\Projects\2006\2006-0007 STA-21-12.48 Part 2\Civil\Drawings\Front-End Sheets\25433GY001.dgn
2/12/2007
1:47:31 PM
25433GY001.dgn

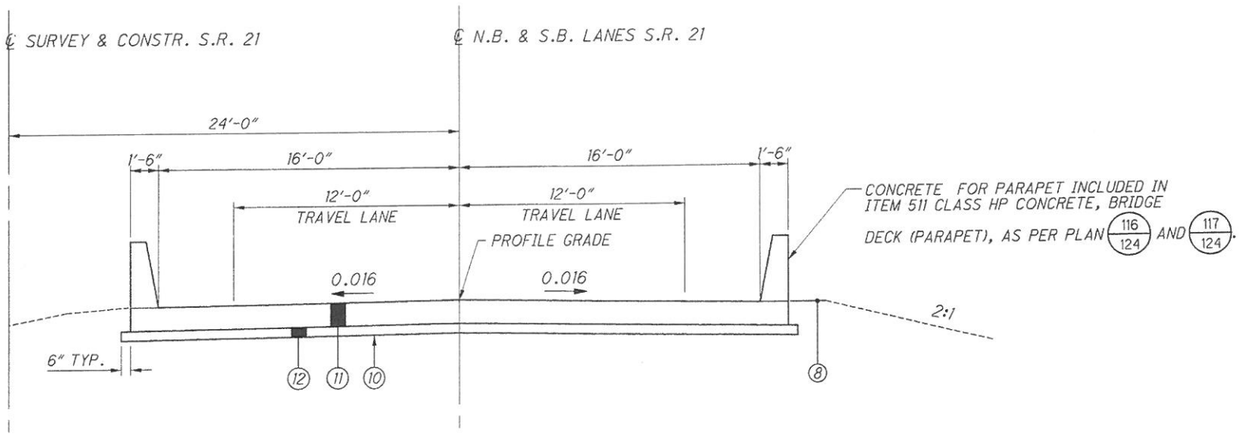

APPROACH SLAB TYPICAL - S.R. 21

(N.B. SHOWN, S.B. SIMILAR)

SECTION APPLIES:

STA. 658+79.45 TO STA. 666+41.64 = 762.19 L.F.

DEDUCT FOR STRUCTURE STA 21-12.48:

STA. 659+04.45 TO STA. 666+16.64 = 712.19 L.F.

TOTAL = 50.00 L.F.

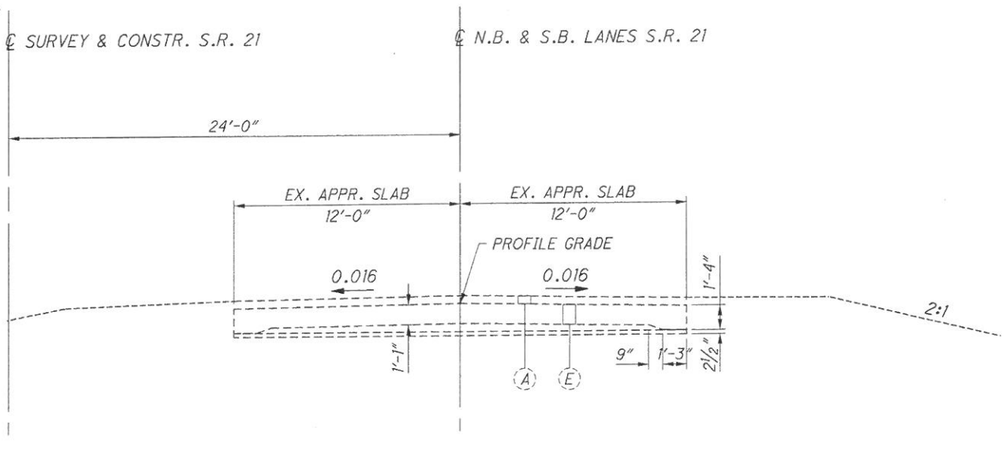

EXISTING APPROACH SLAB TYPICAL - S.R. 21

(N.B. SHOWN, S.B. SIMILAR)

TYPICAL SECTIONS

STA-21-12.48

3A / 124

H:\Projects\2006\2006-0007 STA-21-12.48 Part 2\Civil\Drawings\Front-End Sheets\25433GY002.dgn
2/12/2007 1:47:29 PM
25433GY002.dgn

2/13/2007 12:20:40 PM
H:\Projects\2006\2006-0007 STA-21-12.48 Part 2\Civil\Drawings\Front-End Sheets\25433GN001.dgn
25433GN001.dgn

ROUNDING

THE ROUNDING AT SLOPE BREAKPOINTS SHOWN ON THE TYPICAL SECTIONS APPLY TO ALL CROSS-SECTIONS EVEN THOUGH OTHERWISE SHOWN.

UTILITIES

LISTED BELOW ARE ALL UTILITIES LOCATED WITHIN THE PROJECT CONSTRUCTION LIMITS TOGETHER WITH THEIR RESPECTIVE OWNERS:

GAS: DOMINION EAST OHIO
4725 SOUTHWAY S.W.
CANTON, OH 44706
(330) 478-3136
STEVE CROWL

TELEPHONE: AT&T
50 W. BOWERY STREET, 4TH FLOOR
AKRON, OH 44308
(330) 384-8057
SABRINA LAMPLY-TALBERT

ELECTRIC: OHIO EDISON
1910 W. WEST MARKET STREET
BUILDING 1
AKRON, OHIO 44313
(330) 384-4750
STEVE VANCHOFF

WATER: AQUA OHIO
6650 SOUTH AVENUE
BOARDMAN, OH 44512
(330) 726-8151
DOUG WARRICK

RAILROAD: R.J. CORMAN COMPANY
475 WEST THIRD STREET
DOVER, OHIO 44622
(330) 364-4507
DARRELL PRIDDY, MANAGER

NORFOLK SOUTHERN CORPORATION
1200 PEACHTREE STREET N.E.
ATLANTA GEORGIA 30309-3579
(405) 529-1408
P.N. DECKER, ENGINEER

THE LOCATION OF THE UNDERGROUND UTILITIES SHOWN ON THE PLANS ARE AS OBTAINED FROM THE OWNERS AS REQUIRED BY SECTION 153.64 O.R.C.

UTILITY LINES

THE UTILITY(IES) SHALL BORE ALL EXPENSE INVOLVED IN RELOCATING (INSTALLING) THE AFFECTED UTILITY LINES. THE CONTRACTOR AND UTILITY(IES) ARE TO COOPERATE BY ARRANGING THEIR WORK IN SUCH A MANNER THAT INCONVENIENCE TO EITHER WILL BE HELD TO A MINIMUM.

EXISTING PLANS

EXISTING PLANS ENTITLED STA-21-12.39 MAY BE INSPECTED IN THE ODOT DISTRICT FOUR OFFICE IN AKRON.

ITEM 202 - PAVEMENT REMOVED

THE EXISTING CONCRETE PAVEMENT TO BE REMOVED SHALL BE REMOVED AND DISPOSED OF PER ITEM 202 OF THE CONSTRUCTION AND MATERIAL SPECIFICATIONS. THE EXISTING TYPICAL SECTION SHOWS 24 FEET OF 9" REINFORCED CONCRETE PAVEMENT WITH AN AVERAGE OVERLAY OF 5" ASPHALT PAVEMENT. THE AVERAGE END OF PAVEMENT REMOVED FOR THE NORMAL S.R. 21 TYPICAL SECTION WILL BE 24' x 14".

ELEVATION DATUM

ALL ELEVATIONS ARE BASED ON NAVD88.

ITEM 204 - PROOF ROLLING

AN ESTIMATED QUANTITY FOR THIS ITEM HAS BEEN PROVIDED IN THE GENERAL SUMMARY FOR USE AS DIRECTED BY THE ENGINEER.

WORK LIMITS

THE WORK LIMITS SHOWN ON THESE PLANS ARE FOR PHYSICAL CONSTRUCTION ONLY. PROVIDE THE INSTALLATION AND OPERATION OF ALL WORK ZONE TRAFFIC CONTROL AND WORK ZONE TRAFFIC CONTROL DEVICES REQUIRED BY THESE PLANS WHETHER INSIDE OR OUTSIDE THESE WORK LIMITS.

CLEARING AND GRUBBING

ALTHOUGH THERE ARE NO TREES OR STUMPS SPECIFICALLY MARKED FOR REMOVAL WITHIN THE LIMITS OF THE PROJECT, A LUMP SUM QUANTITY IS INCLUDED IN THE GENERAL SUMMARY FOR ITEM 201, CLEARING AND GRUBBING. ALL PROVISIONS AS SET FORTH IN THE SPECIFICATIONS UNDER THIS ITEM ARE INCLUDED IN THE LUMP SUM PRICE BID FOR ITEM 201, CLEARING AND GRUBBING.

ITEM 606 - IMPACT ATTENUATOR, TYPE 1-98 [BIDIRECTIONAL]

THIS ITEM SHALL CONSIST OF FURNISHING AND INSTALLING ANY ONE OF THE FOLLOWING IMPACT ATTENUATORS, OR AN APPROVED EQUAL AS LISTED ON ROADWAY ENGINEERING'S WEB PAGE AT WWW.DOT.STATE.OH.US/DRRC/ UNDER ROADSIDE SAFETY DEVICES FOR APPROVED IMPACT ATTENUATORS:

1) THE C-A-T MANUFACTURED BY TRINITY INDUSTRY, 1170 N. STATE STREET, GIRARD, OHIO 44420 (TELEPHONE: 330-545-4373).

THE LENGTH OF THE C-A-T SYSTEM IS CONSIDERED TO BE 31'-3" LONG. INSTALLATION SHALL BE AT THE LOCATIONS SPECIFIED IN THE PLANS, IN ACCORDANCE WITH THE MANUFACTURER'S SPECIFICATIONS AS DETAILED ON THE FOLLOWING PRE-APPROVED SHOP DRAWINGS:

DWG. NO.	DRAWING NAME	DWG./REV. DATE	ODOT APPROVAL DATE
SS245M	CRASH-CUSHION ATTENUATING TERMINAL PLAN, ELEVATION AND SECTIONS FOR USE AS A LONGITUDINAL MEDIAN BARRIER TERMINAL OR CRASH CUSHION ATTENUATOR.	4/10/97 REV. 4	3/6/98
SS224M	C-A-T TRANSITION TO MEDIAN BARRIER GUARDRAIL PLAN, ELEVATION & SECTIONS	4/26/96	3/6/98
SS226M	C-A-T TRANSITION TO VERTICAL WALL OR PIER PLAN, ELEVATION & SECTIONS	4/26/96	3/6/98

2) THE BRAKEMASTER MANUFACTURED BY ENERGY ABSORPTION SYSTEMS, INC., ONE EAST WACKER DRIVE, CHICAGO, IL 60601 (TELEPHONE: 312-467-6750).

THE LENGTH OF THE BRAKEMASTER SYSTEM IS CONSIDERED TO BE 32'-8" LONG. INSTALLATION SHALL BE AT THE LOCATIONS SPECIFIED IN THE PLANS, IN ACCORDANCE WITH THE MANUFACTURER'S SPECIFICATIONS AS DETAILED ON THE FOLLOWING PRE-APPROVED SHOP DRAWINGS:

DWG. NO.	DRAWING NAME	DWG./REV. DATE	ODOT APPROVAL DATE
92-00-01	BRAKEMASTER GENERAL ASSEMBLY (UNIDIRECTIONAL SYSTEM)	3/6/97 REV. K	3/6/98
92-00-81	BRAKEMASTER (UNIDIRECTIONAL) WITH FOUNDATION TUBES	2/9/98	3/6/98
92-00-02	BRAKEMASTER GENERAL ASSEMBLY (BIDIRECTIONAL SYSTEM)	3/10/97 REV. K	3/10/97
92-00-82	BRAKEMASTER (BIDIRECTIONAL) WITH FOUNDATION TUBES	2/9/98	3/6/98
9202024	ANCHOR ASSEMBLY, FOUNDATION TUBE, 6½FT., BRS	6/12/97 REV. D	3/6/98

3) THE FLEAT-MT MANUFACTURED BY ROAD SYSTEMS, INC. (RSI), 3616 OLD HOWARD COUNTY AIRPORT ROAD, BIG SPRINGS, TX, 79720 (TELEPHONE 915-263-2435) AND AVAILABLE FROM RSI'S LIST OF APPROVED DISTRIBUTORS.

THE LENGTH OF THE FLEAT-MT SYSTEM IS CONSIDERED TO BE 37'-6" LONG. INSTALLATION SHALL BE AT THE LOCATIONS SPECIFIED IN THE PLANS, IN ACCORDANCE WITH THE MANUFACTURER'S SPECIFICATION AS DETAILED ON THE FOLLOWING PRE-APPROVED SHOP DRAWINGS AND THE MANUFACTURERS INSTALLATION MANUAL.

DWG. NO.	DRAWING NAME	DWG./REV. DATE	ODOT APPROVAL DATE
MEDFLT-W-US	FLARED ENERGY ABSORBING TERMINAL - FLEAT-MT ASSEMBLY FOR WOOD BREAKAWAY POST SYSTEM	4/10/02 REV. 5	1/6/03
MEDFLT-S-US	FLARED ENERGY ABSORBING TERMINAL - FLEAT-MT ASSEMBLY FOR STEEL BREAKAWAY POST SYSTEM	4/10/02 REV. 6	1/6/03
MEDFLT-W-M	FLARED ENERGY ABSORBING TERMINAL - FLEAT-MT (METRIC) ASSEMBLY FOR WOOD BREAKAWAY POST SYSTEM	4/10/02 REV. 5	1/6/03
MEDFLT-S-M	FLARED ENERGY ABSORBING TERMINAL - FLEAT-MT (METRIC) ASSEMBLY FOR STEEL BREAKAWAY POST SYSTEM	4/10/02 REV. 6	1/6/03

THE FACE OF THE TYPE 1-98 IMPACT HEAD SHALL BE COVERED WITH A SHEET OF TYPE G REFLECTIVE SHEETING, PER CMS 730.19, APPROXIMATELY 36" X 12" (ONE 9" X 18" FOR EACH FLEAT-MT IMPACT HEAD). PAYMENT FOR THE ABOVE WORK SHALL BE MADE AT THE UNIT PRICE BID FOR ITEM 606, IMPACT ATTENUATOR, TYPE 1-98 (UNIDIRECTIONAL OR BIDIRECTIONAL), EACH, AND SHALL INCLUDE ALL LABOR, TOOLS, EQUIPMENT AND MATERIALS NECESSARY TO CONSTRUCT A COMPLETE AND FUNCTIONAL IMPACT ATTENUATOR SYSTEM, INCLUDING ALL RELATED TRANSITIONS, HARDWARE, REFLECTIVE SHEETING AND GRADING, NOT SEPARATELY SPECIFIED, AS REQUIRED BY THE MANUFACTURER.

CONNECTION BETWEEN EXISTING AND PROPOSED GUARDRAIL

WHEN IT IS NECESSARY TO SPLICE PROPOSED GUARDRAIL TO EXISTING GUARDRAIL, ONLY THE EXISTING GUARDRAIL SHALL BE CUT, DRILLED, OR PUNCHED. THE CONNECTION SHALL BE MADE USING A "W-BEAM RAIL SPLICE" AS SHOWN IN AASHTO M 180. PAYMENT SHALL BE INCLUDED IN THE CONTRACT PRICE FOR THE RESPECTIVE GUARDRAIL ITEMS.

SEEDING AND MULCHING

THE FOLLOWING QUANTITIES ARE PROVIDED TO PROMOTE GROWTH AND CARE OF PERMANENT SEEDED AREAS:

659, SEEDING AND MULCHING 1814 SQ. YD.

659, REPAIR SEEDING AND MULCHING 91 SQ. YD

659, INTER-SEEDING 91 SQ. YD.

659, COMMERCIAL FERTILIZER 0.33 TON

659, LIME 0.38 ACRES

659, WATER 10 M. GAL.

659, MOWING 4 M. SQ. FT.

SEEDING AND MULCHING SHALL BE APPLIED TO ALL AREAS OF EXPOSED SOIL BETWEEN THE RIGHT-OF-WAY LINES, AND WITHIN THE CONSTRUCTION LIMITS FOR AREAS OUTSIDE THE RIGHT-OF-WAY LINES COVERED BY WORK AGREEMENT OR SLOPE EASEMENT. QUANTITY CALCULATIONS FOR SEEDING AND MULCHING ARE BASED ON THESE LIMITS.

REVIEW OF DRAINAGE FACILITIES

BEFORE ANY WORK IS STARTED ON THE PROJECT AND AGAIN BEFORE FINAL ACCEPTANCE BY THE STATE, REPRESENTATIVES OF THE STATE AND THE CONTRACTOR, ALONG WITH LOCAL REPRESENTATIVES, SHALL MAKE AN INSPECTION OF ALL EXISTING SEWERS WHICH ARE TO REMAIN IN SERVICE AND WHICH MAY BE AFFECTED BY THE WORK. THE CONDITION OF THE EXISTING CONDUITS AND THEIR APPURTENANCE SHALL BE DETERMINED FROM FIELD OBSERVATIONS. RECORDS OF THE INSPECTION SHALL BE KEPT IN WRITING BY THE STATE.

ALL NEW CONDUITS, INLETS, CATCH BASINS, AND MANHOLES CONSTRUCTED AS A PART OF THE PROJECT SHALL BE FREE OF ALL FOREIGN MATTER AND IN A CLEAN CONDITION BEFORE THE PROJECT WILL BE ACCEPTED BY THE STATE.

ALL EXISTING SEWERS INSPECTED INITIALLY BY THE ABOVE MENTIONED PARTIES SHALL BE MAINTAINED AND LEFT IN A CONDITION REASONABLY COMPARABLE TO THAT DETERMINED BY THE ORIGINAL INSPECTION. ANY CHANGE IN THE CONDITION RESULTINGFROM THE CONTRACTOR'S OPERATIONS SHALL BE CORRECTED BY THE CONTRACTOR TO THE SATISFACTION OF THE ENGINEER.

PAYMENT FOR ALL OPERATIONS DESCRIBED ABOVE SHALL BE INCLUDED IN THE CONTRACT PRICE FOR THE PERTINENT 603 CONDUIT ITEMS.

CROSSING AND CONNECTIONS TO EXISTING PIPES AND UTILITIES

WHERE PLANS PROVIDE FOR A PROPOSED CONDUIT TO BE CONNECTED TO, OR CROSS OVER OR UNDER AN EXISTING SEWER OR UNDERGROUND UTILITY, THE CONTRACTOR SHALL LOCATE THE EXISTING PIPES OR UTILITIES BOTH AS TO LINE AND GRADE BEFORE STARTING TO LAY THE PROPOSED CONDUIT.

IF IT IS DETERMINED THAT THE ELEVATION OF THE EXISTING CONDUIT, OR EXISTING APPURTENANCE TO BE CONNECTED, DIFFERS FROM THE PLAN ELEVATION OR RESULTS IN A CHANGE IN THE PLAN CONDUIT SLOPE, THE ENGINEER SHALL BE NOTIFIED BEFORE STARTING CONSTRUCTION OF ANY PORTION OF THE PROPOSED CONDUIT WHICH WILL BE AFFECTED BY THE VARIANCE IN THE EXISTING ELEVATIONS.

IF IT IS DETERMINED THAT THE PROPOSED CONDUIT WILL INTERSECT AN EXISTING SEWER OR UNDERGROUND UTILITY IF CONSTRUCTED AS SHOWN ON THE PLAN, THE ENGINEER SHALL BE NOTIFIED BEFORE STARTING CONSTRUCTION OF ANY PORTION OF THE PROPOSED CONDUIT WHICH WOULD BE AFFECTED BY THE INTERFERENCE WITH AN EXISTING FACILITY.

PAYMENT FOR ALL THE OPERATIONS DESCRIBED ABOVE SHALL BE INCLUDED IN THE CONTRACT PRICE FOR THE PERTINENT 603 CONDUIT ITEM.

CALCULATED CLP CHECKED SAN

GENERAL NOTES

STA-21-12.48

POST CONSTRUCTION STORM WATER TREATMENT

THIS PLAN UTILIZES STRUCTURAL BEST MANAGEMENT PRACTICES (BMP'S) FOR POST CONSTRUCTION STORM WATER TREATMENT.

PAVING UNDER GUARDRAIL

THIS OPERATION SHALL INCLUDE PREPARATION OF THE GRADED SHOULDER USING 209, LINEAR GRADING, AND PAVING UNDER THE GUARDRAIL USING 448 ASPHALT CONCRETE INTERMEDIATE COURSE, TYPE 1, PG 64-22, UNDER GUARDRAIL, AS PER PLAN.

ITEM 209, LINEAR GRADING, SHALL CONSIST OF EXCAVATING EXISTING MATERIAL, PLACING GRANULAR MATERIAL AND APPLYING HERBICIDE AS SPECIFIED IN THE PLANS AND IN ACCORDANCE WITH THE FOLLOWING:

ALL COLLECTED DEBRIS, ASPHALT AND TOPSOIL, INCLUDING RHIZOMES, ROOTS AND OTHER VEGETATIVE PLANT MATERIAL SHALL BE REMOVED AND DISPOSED OF AS SPECIFIED IN 105.17.

THE REMOVED MATERIAL SHALL BE REPLACED WITH COMPACTABLE GRANULAR MATERIAL CONFORMING TO 703.16 PLACED TO GRADE AS DETAILED ON THE TYPICAL SECTION OR AS APPROVED BY THE ENGINEER.

HERBICIDE SHALL BE EPA APPROVED FOR PAVING UNDER GUARDRAIL. IT SHALL BE APPLIED TO THE PREPARED AREA AFTER FINAL LEVELING AND GRADING HAS BEEN COMPLETED. THE APPLICATION SHALL BE JUST PRIOR TO PAVING AND SHALL STRICTLY ADHERE TO THE MANUFACTURER'S INSTRUCTIONS.

EACH SUCCESSFUL BIDDER MUST BE LICENSED BY THE OHIO DEPARTMENT OF AGRICULTURE AS A COMMERCIAL APPLICATOR AND ALL PERSONS INVOLVED IN THE ACTUAL SPRAYING SHALL BE LICENSED AS COMMERCIAL OPERATORS IN THE APPROPRIATE SPRAY CATEGORY.

HERBICIDE LABEL, MATERIAL SAFETY DATA SHEET AND COPY OF APPLICATORS LICENSES SHALL BE SUBMITTED TO THE ENGINEER FOR VERIFICATION PRIOR TO COMMENCING WORK.

ALL EQUIPMENT, MATERIALS AND LABOR REQUIRED TO PERFORM THE WORK OUTLINED ABOVE SHALL BE INCLUDED FOR PAYMENT UNDER ITEM 209, LINEAR GRADING, AS PER PLAN.

PAVING UNDER GUARDRAIL SHALL CONSIST OF PLACING ITEM 448 TO THE DEPTH SPECIFIED. PAVING MAY BE PLACED UNDER EXISTING OR PROPOSED GUARDRAIL USING ONE OF THE FOLLOWING METHODS:

METHOD A
1) SET GUARDRAIL POSTS
2) PLACE ITEM 448

METHOD B
1) PLACE ITEM 448
2) BORE ASPHALT AT POST LOCATIONS
3) SET GUARDRAIL POSTS
4) PATCH AROUND POSTS. THE MATERIALS USED FOR PATCHING SHALL BE AN ASPHALT CONCRETE APPROVED BY THE ENGINEER. PATCHED AREAS SHALL BE COMPACTED USING EITHER HAND OR MECHANICAL METHODS. FINISHED SURFACES SHALL BE SMOOTH AND SLOPED TO DRAIN AWAY FROM THE POSTS

ALL EQUIPMENT, MATERIALS AND LABOR REQUIRED TO PERFORM THE WORK OUTLINED ABOVE, WITH THE EXCEPTION OF SETTING GUARDRAIL POSTS, SHALL BE INCLUDED FOR PAYMENT UNDER ITEM 448, ASPHALT CONCRETE, INTERMEDIATE COURSE, TYPE 1, PG 64-22, UNDER GUARDRAIL, AS PER PLAN.

ITEM 251 - PARTIAL DEPTH PAVEMENT REPAIR

A QUANTITY OF THIS ITEM SHALL BE PROVIDED FOR USE AS DIRECTED BY THE ENGINEER. THE ITEM SHALL CONSIST OF REPAIRING EXISTING LOCATIONS EXHIBITING SURFACE DETERIORATION AND PLACING 3"± OF ITEM 448 ASPHALT CONCRETE, TYPE 2. THE ASPHALT CONCRETE SHALL BE COMPACTED WITH A TYPE I PNEUMATIC TIRE ROLLER AND A STEEL WHEEL ROLLER AS PER 401.13. IT IS NOT THE INTENT TO REPAIR EVERY DETERIORATED AREA WITHIN THE PROJECT. THE ENGINEER SHALL DETERMINE WHICH AREAS ARE TO BE REPAIRED. UNLESS OTHERWISE DIRECTED BY THE ENGINEER, THIS ITEM SHALL BE PERFORMED AFTER THE COMPLETION OF MAINLINE PAVEMENT PLANING. ALSO, THIS ITEM SHALL COMMENCE WITHIN 7 DAYS OF THE COMPLETION OF MAINLINE PAVEMENT PLANING. PAYMENT SHALL BE BASED ON THE ACTUAL NUMBER OF SQUARE YARDS OF PAVEMENT REPAIR. THE FOLLOWING ESTIMATED QUANTITY HAS BEEN CARRIED TO THE GENERAL SUMMARY:

251, PARTIAL DEPTH PAVEMENT REPAIR, 839 SQ. YD.

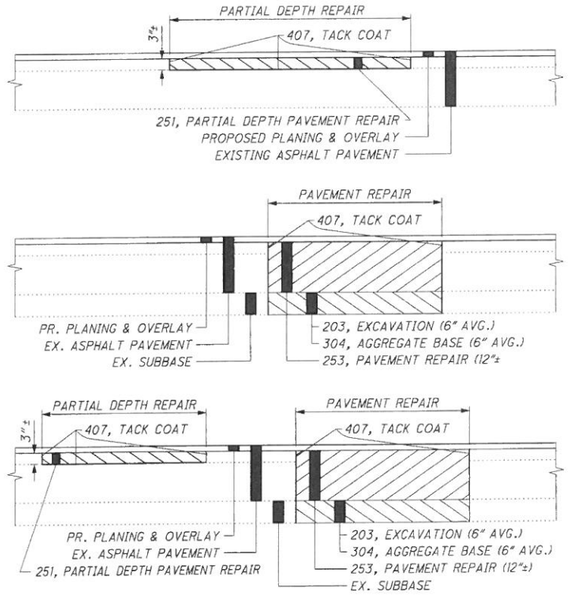

ITEM 304 - AGGREGATE BASE

THE FOLLOWING ESTIMATED QUANTITY HAS BEEN PROVIDED AND SHALL BE USED AS DIRECTED BY THE ENGINEER TO BACKFILL AREAS WHICH WERE EXCAVATED UNDER ITEM 203 EXCAVATION NOT INCLUDING EMBANKMENT CONSTRUCTION. THE FOLLOWING ESTIMATED QUANTITY HAS BEEN CARRIED TO THE GENERAL SUMMARY:

304, AGGREGATE BASE 140 CU YD

ITEM 304 AGGREGATE BASE, AS PER PLAN

GRANULATED SLAG (GS) SHALL NOT BE PERMITTED FOR THIS ITEM. ALL OTHER REQUIREMENTS OF SECTIONS 304 AND 703.17 OF THE CONSTRUCTION AND MATERIAL SPECIFICATIONS SHALL STILL BE APPLICABLE.

ITEM 408 - PRIME COAT, AS PER PLAN

THE CONTRACTOR WILL APPLY "MC-70" AT A RATE OF 0.4 GALLONS PER SQUARE YARD, OR AS DETERMINED BY THE ENGINEER, TO THE COMPLETED ITEM 617 COMPACTED AGGREGATE SHOULDER.

THE CONTRACTOR SHALL PROVIDE A SHIELD TO PREVENT THE SPRAYING OR DRIFTING OF LIQUID PRIME COAT MATERIAL ONTO THE EDGE OF THE PAVEMENT OR EDGELINE. CARE ALSO SHALL BE TAKEN TO AVOID SPRAYING LIQUID PRIME COAT MATERIAL ONTO DRIVEWAY APRONS, MAILBOX APPROACHES OR ANY PEDESTRIAN AREAS. THE ATTENTION OF THE CONTRACTOR IS DIRECTED TO 107.10 OF THE SPECIFICATIONS.

AN ESTIMATED QUANTITY OF 596 GAL. HAS BEEN CARRIED TO THE GENERAL SUMMARY FOR THIS WORK.

ITEM 442 - ASPHALT CONCRETE SURFACE COURSE, 12.5mm, TYPE B (446), AS PER PLAN

THE REQUIREMENTS OF 442 AND 446 SHALL APPLY; DEVIATIONS FROM THESE ARE AS FOLLOWS:

THE COMBINATION OF NEW AGGREGATES, NEW ASPHALT BINDER, AND RECLAIMED MATERIAL SHALL BE AS REQUIRED TO PRODUCE A COMPOSITION CONTAINING A MINIMUM OF 6.2% NEW ASPHALT BINDER RESULTING IN A MINIMUM TOTAL BINDER OF 6.9%. THE PERCENTAGE OF RECLAIMED MATERIAL PROPOSED FOR USE SHALL BE INCLUDED IN THE MIX DESIGN PROCESS TO ESTABLISH THE JOB MIX FORMULA (JMF) IN ACCORDANCE WITH 401.04.

MATERIALS:	THE MATERIALS SHALL BE:
AGGREGATES	703.05*

*THE VIRGIN COURSE AGGREGATE PORTION OF THE MIXTURE SHALL BE AIR COOLED BLAST FURNACE SLAG AND MEET THE REQUIREMENTS OF 703.05. ONLY RECLAIMED PAVEMENT FROM THIS PROJECT OR AN APPROVED EQUAL DETERMINED BY THE DISTRICT ENGINEER OF TESTS WILL BE PERMITTED FOR USE IN THIS ITEM.

ITEM 617 COMPACTED AGGREGATE, AS PER PLAN

IN LOW SHOULDER AREAS EXCEEDING 1", OR AS DIRECTED BY THE ENGINEER, RECYCLED ASPHALT PAVEMENT (RAP) SHALL BE USED IN AREAS ADJACENT TO THE PAVED BERM. THE RAP SHALL HAVE A MINIMUM PG CONTENT OF 4.5% AND MEET THE FOLLOWING GRADATION. ONCE THE STOCKPILE MEETS THE GRADATION, THE PG CONTENT OF THE RAP SHALL BE DETERMINED PER 441.03. THE RAP ANALYSIS MUST BE SUBMITTED TO THE ENGINEER FOR APPROVAL 2 WEEKS PRIOR TO USE. METHOD OF MEASUREMENT SHALL BE AS PER 617.06. PLACEMENT AND COMPACTION SHALL MEET THE REQUIREMENTS OF ITEM 617. ALL MATERIALS, LABOR, EQUIPMENT, TOOLS AND INCIDENTALS NECESSARY TO COMPLETE THE WORK SHALL BE INCLUDED IN THE UNIT PRICE BID FOR ITEM 617 COMPACTED AGGREGATE, AS PER PLAN.

MODIFIED GRADATION SHALL APPLY:

SIEVE	TOTAL PERCENT PASSING
1- 1/2 "	100
3/4 "	50-100
NO. 4	35-70
NO. 30	9-33
NO. 200	0-13

AN ESTIMATED QUANTITY OF 77 CU. YD. HAS BEEN CARRIED TO THE GENERAL SUMMARY FOR THIS WORK.

PAVEMENT RESTORATION FOR PIPE INSTALLATIONS, AS PER PLAN

THE FOLLOWING QUANTITY HAS BEEN PROVIDED FOR PAVEMENT RESTORATION FOLLOWING INSTALLATION OF PIPES, UNDER ITEM 603, TO BE PLACED UNDER THE BIKE PATH.

ITEM 304, 6" AGGREGATE BASE	1 CU. YD.
ITEM 411, 3" STABILIZED CRUSHED AGGREGATE	1 CU. YD.

THE ABOVE QUANTITY IS BASED ON A TRENCH WIDTH PLUS TWO FEET ON EACH SIDE OF THE TRENCH. SEE STANDARD CONSTRUCTION DRAWING DM-1.4 FOR TRENCH WIDTH FORMULA AND CALCULATION.

PROVIDE ANY MATERIALS USED OUTSIDE THE LIMITS STATED ABOVE AT NO ADDITIONAL COST.

PAVEMENT MARKING LANE WIDTHS

THE NORMAL LANE WIDTH FOR THE PAVEMENT MARKINGS ON THIS PROJECT SHALL BE AS FOLLOWS:

STATE ROUTE 21 STA. 649+30 TO STA. 676+25 LANE WIDTH OF 12 FT.

ITEM 604 - MONUMENT ASSEMBLY, AS PER PLAN

ADJUSTABLE MONUMENT ASSEMBLIES AS SHOWN ON STANDARD CONSTRUCTION DRAWING "RM-1.1", REVISED APRIL 18, 2003, WILL BE PLACED BY THE CONTRACTOR AT THE TIME OF CONSTRUCTION. THE CONTRACTOR WILL BE PROVIDED A LOCATION LIST OF EXISTING MONUMENTATION WHICH IS TO BE REPLACED WITH NEW ADJUSTABLE MONUMENT BOX ASSEMBLIES AT THE PRE-CONSTRUCTION MEETING. THIS LIST MAY INCLUDE BOTH EXPOSED AND BURIED MONUMENTATION AND MAY ALSO INCLUDE SOME TIES TO AID MONUMENT ASSEMBLIES SHALL ALSO BE INCLUDED IN THIS ITEM.

QUANTITY THAT WILL BE CARRIED TO THE GENERAL SUMMARY:
604, MONUMENT ASSEMBLY, AS PER PLAN, 1 EACH

PAVEMENT RESTORATION FOR MONUMENT ASSEMBLY INSTALLATIONS

THE FOLLOWING QUANTITY IS PROVIDED FOR PAVEMENT RESTORATION FOLLOWING INSTALLATION OF ITEM 604 MONUMENT ASSEMBLIES.

ITEM 301, 8" ASPHALT CONCRETE BASE, PG64-22	1 CU. YD.
ITEM 304, 6" AGGREGATE BASE	1 CU. YD.
ITEM 305, 9" CONCRETE BASE	1 CU. YD.
ITEM 407, TACK COAT	1 GAL.
ITEM 442, 1½" ASPH. CONC. SURF. COURSE	1 CU. YD.
ITEM 442, 2 " ASPH. CONC. INTRM. COURSE	1 CU. YD.

THE ABOVE QUANTITY IS BASED ON A WIDTH OF TWO FEET AROUND THE PERIMETER OF THE MONUMENT ASSEMBLIES.

PROVIDE ANY MATERIALS USED OUTSIDE THE LIMITS STATED ABOVE AT NO ADDITIONAL COST.

PROFILE AND ALIGNMENT

WHERE OVERLAY IS CALLED FOR ON THE PLANS, PLACE THE PROPOSED PAVEMENT TO FOLLOW THE ALIGNMENT AND PROFILE OF THE EXISTING PAVEMENT. PLACE THE PROPOSED ASPHALT CONCRETE OVERLAY (WITH A UNIFORM THICKNESS OF 3 1/4 INCHES (AS SHOWN ON THE TYPICAL SECTIONS).

CALCULATED CLP CHECKED SAN

GENERAL NOTES

STA-21-12.48

H:\Projects\2006\2006-0007 STA-21-12.48 Part 2\Civil\Drawings\Front-End 8/24/2007 1 55 AM
25433GN002.dgn

ENVIRONMENTAL COMMITMENTS

RJ CORMAN RAILROAD

THE CONTRACTOR SHALL SCHEDULE HIS WORK OVER THE RJ CORMAN RAILROAD WHEN THERE IS NO TRAIN TRAFFIC. THE CONTRACTOR WILL BE REQUIRED TO CLOSELY COORDINATE HIS SCHEDULE WITH ODOT AND THE RAILROAD. THE CONTRACTOR WILL CONSTRUCT A TEMPORARY CROSSING OVER THE RAILROAD FOR CONSTRUCTION AND MAINTENCE ACCESS IN ACCORDANCE WITH THE RAILROAD AGREEMENT. THE CONTRACTOR WILL BE REQUIRED TO PROVIDE A FLAGGER ON DAYS WHEN THE RAILROAD IS OPERATING.

THE CONGRESSMAN RALPH REGULA TOWPATH TRAIL

THE CONGRESSMAN RALPH REGULA TOWPATH TRAIL MAY BE CLOSED FOR SHORT PERIODS WHILE WORK IS PERFORMED OVER THE TRAIL. CLOSURES WILL BE LIMITED TO A DURATION OF APPROXIMATELY 3 DAYS IN LENGTH EXCEPT FOR CONSTRUCTING AND/OR REMOVING CAUSEWAY AND PAINTING OPERATIONS, WHICH MAY HAVE DURATIONS LASTING 5 DAYS IN LENGTH. DURING WEEKDAYS, FROM 7:00 A.M. TO 6:00 P.M., APPROXIMATELY 14 CLOSURES ARE ANTICIPATED DURING THE TOTAL CONSTRUCTION PERIOD. THE TRAIL MUST BE PROTECTED AT ALL TIMES FROM DAMAGE CAUSED BY CONSTRUCTION EQUIPMENT AND ACTIVITIES. PRIOR TO REOPENING THE TRAIL, THE BIKE TRAIL MUST BE FREE OF HOLES, RUTS, RIDGES AND EQUIPMENT MARKS AND RESTORED WITH 411 MATERIAL TO MATCH EXISTING MATERIAL AND COMPACTED. FAILURE TO PROTECT AND/OR RESTORE THE BIKE TRAIL MAY RESULT IN THE PROJECT BEING SHUT DOWN BY THE ENGINEER. THE CONTRACTOR SHALL PROVIDE 3 DAY ADVANCE NOTICE OF CLOSURE TO THE ENGINEER AND TO THE STARK COUNTY PARKS DISTRICT, POST "BIKEPATH CLOSED" SIGNS AT LAKE AVENUE AND ON THE TOWPATH AREA TO THE NORTH, AND ERECT CHAIN LINK FENCE AT THE LOCATIONS SHOWN IN THE PLAN WHEN THE PATH IS CLOSED. THE CONTRACTOR WILL ALSO POST ADDITIONAL WARNING SIGNS AND DETOUR ROUTE (SHOWN IN THE PLANS) AS NEEDED AND PROVIDE NOTIFICATION TO THE CITY OF MASSILLON, AND TO LOCAL AFFECTED BUSINESSES PRIOR TO CLOSING.

THE FOLLOWING ESTIMATED QUANTITY HAS BEEN CARRIED TO THE MAINTENANCE OF TRAFFIC GENERAL SUMMARY.

ITEM 411, STABILIZED CRUSHED AGGREGATE 50 CU. YDS.

TUSCARAWAS RIVER CANOE TRAFFIC

PERSONS CANOEING THE TUSCARAWAS RIVER WILL BE ADVISED THAT USING THE RIVER UNDER THE BRIDGES WOULD NOT BE SAFE DURING ACTIVE CONSTRUCTION. WARNING SIGNS WILL BE POSTED BY THE CONTRACTOR. THE RIVER WILL BE CLOSED TO THE CANOEISTS DURING ACTIVE BRIDGE WORK IN SPAN 2, SAID CLOSURE PERIODS BEING LIMITED TO THE FOLLOWING NUMBER OF CLOSURE PERIODS, 12 ESTIMATED. DURATION: 3-5 DAYS EACH CLOSURE CLOSURE TIMING: 7:00 A.M. TO 6:00 P.M., MONDAY - FRIDAY

BEST MANAGEMENT PRACTICES

ALL WORK PERFORMED WILL COMPLY WITH THE 2005 CONSTRUCTION AND MATERIALS SPECIFICATIONS OF THE OHIO DEPARTMENT OF TRANSPORTATION. CONSTRUCTION PLANS WILL INCLUDE PROVISIONS FOR THE CONTROL OF DEMOLITION DEBRIS AND EROSION AND SEDIMENTATION DURING CONSTRUCTION.

ALL SOIL EROSION AND SEDIMENT CONTROL MEASURES AS SPECIFIED IN THE STORM WATER POLLUTION PREVENTION PLAN SHALL BE IN PLACE PRIOR TO ANY EXCAVATION, GRADING, OR FILLING OPERATIONS AND INSTALLATION OF PROPOSED STRUCTURES. THEY SHALL REMAIN IN PLACE UNTIL CONSTRUCTION IS COMPLETED AND THE AREA IS STABILIZED AS ACCEPTED BY THE ENGINEER.

ONLY CLEAN, NON-ERODIBLE MATERIAL WILL BE USED FOR STREAM CROSSINGS, COFFERDAMS, AND EQUIPMENT ACCESS PADS. THE TEMPORARILY PLACED MATERIALS WILL BE REMOVED AND THE STREAM BOTTOM AND BANKS RETURNED TO NEAR NATURAL CONDITIONS WHEN WORK IS COMPLETED.

THE CONTRACTOR SHALL TAKE ALL PRECAUTIONS NECESSARY TO PREVENT ANY INCIDENTAL DISCHARGES OF OIL, GREASE, OR OTHER FLUIDS AND/OR EPOXYURETHANE SEALER, PAINT, OR OTHER MATERIALS USED TO REPAIR, CLEAN, SEAL, OR TREAT ANY BRIDGE STRUCTURE FROM ENTERING THE TUSCARAWAS RIVER AND TO TAKE THE APPROPRIATE ACTIONS IN THE EVENT OF A RELEASE.

THE CONTRACTOR SHALL TAKE PRECAUTIONS TO AVOID AND/OR LIMIT DEMOLITION DEBRIS FROM ENTERING THE RIVER. ANY MATERIALS THAT DOES FALL INTO THE RIVER, SHALL BE REMOVED AS SOON AS POSSIBLE.

IN SUCH CASE WHERE THERE IS AN INCIDENT OF HAZARDOUS MATERIAL THAT FALLS OR MIGRATES INTO THE RIVER, THE CONTRACTOR SHALL AS SOON AS POSSIBLE NOTIFY THE ENGINEER/SUPERVISOR AND THE FOLLOWING THE AGENCIES:

OHIO EPA SPILL REPORTING
24 HOUR EMERGENCY SERVICE
CALL: 1-800-282-9378

AND PROVIDE AS MUCH OF THE FOLLOWING INFORMATION AS POSSIBLE:

1. TIME OBSERVED
2. LOCATION
3. MATERIAL RELEASED
4. PROBABLE SOURCE
5. VOLUME AND DURATION
6. PRESENT & ANTICIPATED MOVEMENT OF CONTAINMENT
7. PERSONNEL ON SCENE
8. ACTIONS ALREADY INITIATED

WATERWAY PERMIT DETERMINATION (404/401) - ODOT PROJECTS

ALL PROJECTS INVOLVING JURISDICTIONAL WATERS OF THE UNITED STATES (STREAMS, RIVERS, NON-ISOLATED WETLANDS) AND/OR ISOLATED WETLANDS ARE SUBJECT TO REGULATION UNDER SECTIONS 404 AND 401 OF THE CLEAN WATER ACT, AND POSSIBLY OHIO EPA ISOLATED WETLAND LAW. THE OHIO DEPARTMENT OF TRANSPORTATION - OFFICE OF ENVIRONMENTAL SERVICES (OES) AND/OR THE UNITED STATES ARMY CORPS OF ENGINEERS (USACE) HAS DETERMINED THAT THE PROJECT MEETS THE CRITERIA OF NATIONWIDE PERMIT (NWP) 3 - MAINTENANCE; AND NWP 33 - TEMPORARY CONSTRUCTION ACCESS AND DEWATERING; BASED UPON THE ANTICIPATED IMPACTS TO STREAM(S) AND/OR WETLAND(S). THESE PERMIT DETERMINATIONS INCLUDE THE USE OF TEMPORARY CONSTRUCTION ACCESS FILL THAT MAY BE REQUIRED FOR CONSTRUCTION (I.E. CAUSEWAY STREAM CROSSINGS, CONSTRUCTION ACCESS PADS, COFFERDAMS, ETC.). THE CONTRACTOR SHOULD BE AWARE THAT ANY MODIFICATION TO THE TEMPORARY CONSTRUCTION ACCESS FILL THAT INCREASES THE AMOUNT OF TEMPORARY FILL BELOW THE ORDINARY HIGH WATER MARK (OHWM), WHICH IS THE USACE'S JURISDICTIONAL LIMITS, WILL REQUIRE ADDITIONAL PRE-CONSTRUCTION NOTIFICATION (PCN) AND AUTHORIZATION BY THE USACE. SHOULD AN INCREASE IN THE AMOUNT OF TEMPORARY CONSTRUCTION ACCESS FILL BE REQUIRED, THE CONTRACTOR SHALL COORDINATE SUCH ACTIVITIES, INCLUDING THE ADDITIONAL PCN, THROUGH OES AND ALLOW 60 DAYS MINIMUM FOR PROCESSING WITH THE USACE. THE CONTRACTOR SHALL NOT COORDINATE THESE ACTIVITIES DIRECTLY WITH THE USACE. THE CONTRACTOR SHALL NOT UTILIZE TEMPORARY FILLS BELOW OHWM UNTIL SUCH ACTIVITY IS AUTHORIZED BY THE USACE. THE ADDITIONAL PCN SHALL INCLUDE PERTINENT INFORMATION (I.E. VOLUME AND SURFACE AREA OF TEMPORARY FILLS) AND DRAWINGS (PLAN AND PROFILE VIEW) OF TEMPORARY FILLS BELOW OHWM. ONLY CLEAN, NON-ERODIBLE MATERIALS SHALL BE USED FOR TEMPORARY CONSTRUCTION ACCESS FILLS. ANY TEMPORARY FILLS BELOW OHWM SHALL BE REMOVED FOLLOWING COMPLETION OF THE AUTHORIZED ACTIVITY AND THE AREA OF STREAM WHERE TEMPORARY FILL WAS LOCATED SHALL BE RESTORED TO ITS PRE-CONSTRUCTION CONDITION. PLEASE NOTE THAT FORDING OF WATERWAYS IS NOT ALLOWED PER ODOT CONSTRUCTION AND MATERIAL SPECIFICATIONS 2005, ITEM 207.03.

MECHANICAL EQUIPMENT OPERATION AT STREAM CHANNEL

THE MECHANICAL EQUIPMENT USED TO EXECUTE THE WORK AUTHORIZED HEREIN SHALL BE OPERATED IN SUCH A WAY AS TO MINIMIZE TURBIDITY THAT COULD DEGRADE WATER QUALITY AND ADVERSELY AFFECT AQUATIC PLANT AND ANIMAL LIFE.

INSTREAM WORK

ALL MATERIALS REMOVED FROM DITCHES, STREAMS OR WETLANDS MUST BE IMMEDIATELY REMOVED TO AN UPLAND SITE AND STABILIZED (I.E., SEEDED) TO PREVENT REDISTRIBUTION INTO ANY WATERS OF THE UNITED STATES. IMMEDIATE REMOVAL IS DEFINED BY THE UNITED STATES ARMY CORPS OF ENGINEERS AS DEPOSITING THE REMOVED MATERIALS DIRECTLY INTO A TRUCK AND REMOVING THE MATERIAL FROM THE SITE; PLACEMENT OF REMOVED MATERIALS INTO A WETLAND OR ON THE BANKS OF A STREAM EVEN TEMPORARILY IS CONSIDERED A FILL AND REQUIRES A PERMIT ACTION. ANY AREAS DISTURBED BY EQUIPMENT ACTIVITIES MUST BE SEEDED TO PREVENT EROSION OF SEDIMENTS INTO WATERS OF THE UNITED STATES.

WATER COLUMN AND SEDIMENTATION IMPACTS SHALL BE KEPT TO A MINIMUM THROUGH THE USE OF BEST MANAGEMENT PRACTICES FOR SOIL EROSION AND SEDIMENTATION CONTROL.

INSTREAM WORK WILL BE LIMITED WERE PRACTICABLE AND ONLY CLEAN NON-ERODIBLE MATERIAL WILL BE USED FOR STREAM CROSSINGS, COFFERDAMS, OR OTHER EQUIPMENT ACCESS PADS. THIS TEMPORARILY PLACED MATERIAL WILL BE REMOVED AND THE STREAM BOTTOM RESTORED TO NEAR NATURAL CONDITIONS WHEN THE WORK IS COMPLETED.

ENDANGERD SPECIES HABITAT

THIS PROJECT IS WITHIN THE RANGE OF THE FEDERALLY ENDANGERED INDIAN BAT (MYOTIS SODALI) AND MAY IMPACT SUMMER ROOSTING HABITAT FOR THIS SPECIES. THE SUMMER ROOSTING HABITAT FOR THE INDIANA BAT CONSISTS OF LIVING OR DEAD TREES OR SNAGS WITH EXFOLIATING, PEELING OR LOOSE BARK, SPLIT TRUNKS AND/OR BRANCHES OR CAVITIES THEREFORE, ANY UNAVOIDABLE CUTTING OF SUCH TREES WILL BE PERFORMED ONLY AFTER SEPTEMBER 15 AND BEFORE APRIL 15.

THE UNDERSIDE OF BRIDGES SHALL BE CHECKED FOR THE PRESENCE OF BATS PRIOR TO CONSTRUCTION BY THE ENGINEER. IF BATS ARE FOUND, THE DISTRICT 4 ENVIRONMENTAL SECTION SHALL BE CONTACTED FOR FURTHER DIRECTION.

DEMOLITION DEBRIS

THE CONTRACTOR SHALL TAKE PRECAUTIONS TO ADVOID AND/OR LIMIT DEMOLITION DEBRIS FROM ENTERING THE RIVER. ANY MATERIAL THAT DOES FALL INTO THE RIVER SHALL BE REMOVED AS SOON AS POSSIBLE.

STREAM CHANNEL EXCAVATION

THE CONTRACTOR SHALL TAKE ALL PRECAUTIONS NECESSARY TO PREVENT ANY INCIDENTAL DISCHARGES ASSOCIATED WITH THE EXCAVATION AND HAULING OF MATERIAL FROM THE STREAM CHANNEL. THIS PERTAINS TO ANY EXCAVATION OPERATIONS SUCH AS EXCAVATION FOR TEMPORARY SUPPORT STRUCTURE, AND ROCK CHANNEL PROTECTION AND REMOVAL OF ANY TEMPORARY FILL ASSOCIATED WITH CONSTRUCTION OPERATIONS.

ASBESTOS NOTIFICATION

AN ASBESTOS SURVEY OF THE SR 21 BRIDGE STRUCTURE LOCATED AT SLM 12.48 (L&R) SCHEDULED FOR REHABILITATION WAS CONDUCTED BY A CERTIFIED ASBESTOS HAZARD EVALUATION SPECIALIST. THE SURVEY DETERMINED THAT NO ASBESTOS IS PRESENT ON THE BRIDGE.
A COPY OF THE OHIO ENVIRONMENTAL PROTECTION AGENCY (OEPA) NOTIFICATION OF DEMOLITION AND RENOVATION FORM, PARTIALLY COMPLETED AND SIGNED BY THE BRIDGE OWNER, WILL BE PROVIDED TO THE SUCCESSFUL BIDDER. THE CONTRACTOR SHALL COMPLETE THE FORM AND SUBMIT IT TO:

DIVISION OF AIR POLLUTION CONTROL
DAN ALEMAN, ADMINISTRATOR
420 MARKET AVENUE NORTH
CANTON, OHIO 44702
(330) 489-3385
FAX: (330) 489-3335

AT LEAST TEN (10) WORKING DAYS PRIOR TO THE START OF THE DEMOLITION OF THE BRIDGE. THE CONTRACTOR SHALL PROVIDE A COPY OF THE COMPLETED FORM TO THE ENGINEER. INFORMATION REQUIRED ON THE FORM WILL INCLUDE:1) THE CONTRACTORS NAME AND ADDRESS, 2) THE SCHEDULED DATES FOR THE START AND COMPLETION OF THE BRIDGE REMOVAL AND 3) A DESCRIPTION OF THE PLANNED DEMOLITION WORK AND THE METHOD(S) TO BE USED. A COPY OF THE OEPA FORM IS AVAILABLE FOR INSPECTION AT THE ODOT DISTRICT 4 CONSTRUCTION OFFICE, 2088 S. ARLINGTON ROAD, AKRON, OHIO 44306.

BASIS FOR PAYMENT-THE CONTRACTOR SHALL FURNISH ALL FEES, LABOR, AND MATERIAL NECESSARY TO COMPLETE AND SUBMIT THE OEPA NOTIFICATION FORM. PAYMENT FOR THIS WORK SHALL BE INCLUDED IN ITEM 202-PORTIONS OF STRUCTURE REMOVED, OVER 20 FOOT SPAN, AS PER PLAN.

WATER QUALITY PROTECTION

NO TOXIC OR HAZARDOUS MATERIALS SUCH AS SEALANTS, PAINT, SOLVENTS, CLEANING AGENTS, EARTHEN MATERIALS, WASTE-WATER, FUELS OR DEBRIS OF ANY KIND SHALL BE DISCHARGED TO ANY STREAMS, WETLANDS, DRAINAGE COURSES, OR BODIES OF WATER. ALL ASPHALT OR CONCRETE GRINDINGS, EXCESS ASPHALTIC OR CONCRETE MATERIALS OR ANY OTHER DEBRIS GENERATED DURING RESURFACING OR OTHER SIMILAR ACTIVITIES SHALL BE NOT BE DISPOSED OF WITHIN A FLOODPLAIN BELOW THE 100-YEAR FLOOD ELEVATION.

THE CONTRACTOR SHALL TAKE ALL PRECAUTIONS NECESSARY TO PREVENT LIQUIDS USED TO REPAIR, CLEAN, SEAL, OR TREAT ANY BRIDGE STRUCTURE (I.E. PAINT, SEALER, SOLVENT) FROM ENTERING STREAMS, WETLANDS OR OTHER WATERS OF THE UNITED STATES AND TAKE THE APPROPRIATE ACTIONS IN THE EVENT OF A RELEASE. ANY SUCH SPILL OR EVENT SHALL BE REPORTED IMMEDIATELY TO THE PROJECT ENGINEER, THE LOCAL FIRE DEPARTMENT, AND THE VILLAGE ADMINISTRATOR. THE CONTRACTOR SHALL BE RESPONSIBLE FOR THE CLEAN UP AND REMEDIATION OF ANY SUCH SPILL.

TRAFFIC PROTECTION FOR BIKE AND CANAL TRAFFIC

THE BIKE PATH AND RIVER TRAFFIC IS ACTIVE TRAFFIC AND SHALL BE PROTECTED AS PER 501.05.

CALCULATED CLP CHECKED SAN

GENERAL NOTES - ENVIRONMENTAL COMMITMENTS

STA-21-12.48

6
124

H:\Projects\2006\2006-0007 STA-21-12.48 Part 2\Civil\Drawings\Front-End Sheets\25433GN003.dgn 8/24/2007 10:5Hl2 AM
25433GN003.dgn

NOTIFICATION AND CONTACTS

THE CONTRACTOR SHALL NOTIFY THE FOLLOWING ENTITIES IN WRITING AND VIA TELEPHONE AT LEAST EIGHTEEN (18) DAYS PRIOR TO THE BEGINNING OF THE CONSTRUCTION ACTIVITIES. INCLUDED IN THE NOTIFICATION SHALL BE THE PROJECTED DATES AND TIME FRAMES OF ANY ROAD CLOSURES.

1. OHIO DEPARTMENT OF TRANSPORTATION
   DISTRICT 4
   2088 SOUTH ARLINGTON ROAD
   AKRON, OHIO 44306
   1-800-603-1054

2. OHIO STATE HIGHWAY PATROL
   CANTON PATROL POST
   4710 SHUFFEL ROAD
   NORTH CANTON, OHIO 44720
   (330)-433-6200

3. STARK COUNTY SHERIFF'S DEPARTMENT
   4500 ATLANTIC BOULEVARD NE
   CANTON, OHIO 44705
   (330)-430-3802

4. STARK COUNTY ENGINEER'S OFFICE
   5165 SOUTHWAY STREET SW
   CANTON, OHIO 44706
   (330)-477-6781

5. CITY OF MASSILLON ENGINEER'S OFFICE
   151 LINCOLN WAY EAST
   MASSILLON, OHIO 44646
   (330)-830-1722

6. CITY OF MASSILLON POLICE DEPARTMENT
   1 JAMES DUNCAN PLAZA
   MASSILLON, OHIO 44646
   (330)-832-9811

7. CITY OF MASSILLON FIRE DEPARTMENT
   233 ERIE STREET SOUTH
   MASSILLON, OHIO 44646
   (330)-833-1053

SHOULD THE PROJECTED DATES AND TIME FRAMES OF THE START AND END OF THE ROAD CLOSURES CHANGE THROUGHOUT THE DURATION OF THE PROJECT, THE AGENCIES LISTED ABOVE MUST BE NOTIFIED IMMEDIATELY OF SUCH CHANGES.

SEQUENCE OF CONSTRUCTION

PROJECT DESCRIPTION:

THIS PROJECT CONSISTS OF THE REDECKING OF THE SR 21 TWIN STRUCTURES OVER THE TUSCARAWAS RIVER AND MINIMAL ROADWAY APPROACH WORK. ONE LANE OF TRAFFIC IN EACH DIRECTION MUST BE MAINTAINED AT ALL TIMES ON SR 21. TRAFFIC WILL BE MAINTAINED ON SR 21 THRU THE CONSTRUCTION OF CROSSOVERS. TRAFFIC MUST ALSO BE MAINTAINED AT ALL TIMES ON RIVERSIDE ROAD (TR 353). RAILWAY, BIKEWAY AND RIVER TRAFFIC MUST ALSO BE MAINTAINED AT ALL TIMES.

CONSTRUCTION PHASE 1:

THE CONTRACTOR SHALL CONSTRUCT THE REQUIRED CROSSOVERS NORTH AND SOUTH OF THE STA-21-1248 BRIDGES. BOTH SETS OF CROSSOVERS SHALL BE CONSTRUCTED AT THIS TIME. THE CONTRACTOR SHALL BE REQUIRED TO INSTALL APPROPRIATE DRAINAGE STRUCTURES TO MAINTAIN PROPER DRAINAGE OF THE ROADWAY FACILITY DURING CONSTRUCTION AS DETAILED ON THE CROSSOVER GEOMETRIC PLANS. CARE SHALL BE TAKEN TO PROTECT THE EXISTING STORM INLETS LOCATED NEAR THE PROPOSED CROSSOVER LOCATIONS.

CONSTRUCTION PHASE 2:

THE CONTRACTOR SHALL CONSTRUCT THE STA-21-1248L STRUCTURE IN THIS PHASE OF CONSTRUCTION. ONE LANE OF TRAFFIC SHALL BE MAINTAINED IN EACH DIRECTION ON THE STA-21-1248R STRUCTURE THROUGH THE USE OF THE CROSSOVERS CONSTRUCTED IN CONSTRUCTION PHASE 1. THE CONTRACTOR SHALL MODIFY THE NORTHBOUND SR 21 APPROACH TO THE SR 21 / LAKE AVENUE INTERSECTION AND THE LAKE AVENUE/ ERIE STREET INTERSECTION AS SHOWN IN THE PLANS. UPON COMPLETION OF CONSTRUCTION PHASE 2 ACTIVITIES, THE CONTRACTOR SHALL PROCEED TO PHASE 3.

CONSTRUCTION PHASE 3:

THE CONTRACTOR SHALL CONSTRUCT THE STA-21-1248R STRUCTURE IN THIS PHASE OF CONSTRUCTION. ONE LANE OF TRAFFIC SHALL BE MAINTAINED IN EACH DIRECTION ON THE NEWLY REDECKED STA-21-1248L STRUCTURE THRU THE USE OF THE CROSSOVERS CONSTRUCTED IN CONSTRUCTION PHASE 1. UPON COMPLETION OF CONSTRUCTION PHASE 3 ACTIVITIES, THE CONTRACTOR SHALL RESTORE THE NORMAL TRAFFIC PATTERN TO SR 21. UPON COMPLETION OF PHASE 3 CONSTRUCTION ACTIVITIES, THE CONTRACTOR SHALL PROCEED TO PHASE 4.

CONSTRUCTION PHASE 4:

THE CONTRACTOR SHALL RESURFACE S.R. 21 AND INSTALL PERMANENT SIGNING AND PAVEMENT MARKINGS.

PERMITTED CONSTRUCTION PHASING

WORK SHALL BEGIN WITH PHASE 1 AND PROCEED IN SEQUENCE TO PHASE 4. THE ORDER OF CONSTRUCTION OF PHASES 2 AND 3 MAY BE REVERSED, HOWEVER, THE CONTRACTOR SHALL NOT BE PERMITTED TO PERFORM CONSTRUCTION PHASES 2 AND 3 CONCURRENTLY.

ITEM 614 - LAW ENFORCEMENT OFFICER (WITH PATROL CAR)

IN ADDITION TO THE REQUIREMENTS OF CMS 614 AND THE LATEST EDITION OF THE OHIO MANUAL OF UNIFORM TRAFFIC CONTROL DEVICES (OMUTCD). A UNIFORMED LAW ENFORCEMENT OFFICER (AND OFFICAL PATROL CAR WITH WORKING TOP-MOUNTED EMERGENCY FLASHING LIGHTS) SHALL BE PROVIDED FOR CONTROLLING TRAFFIC FOR THE FOLLOWING TASKS:

FOR LANE CLOSURES: DURING INITIAL SET-UP PERIODS, TEAR DOWN PERIODS, SUBSTANTIAL SHIFTS OF A CLOSURE POINT OR WHEN NEW LANE CLOSURE ARRANGEMENTS ARE INITIATED.

DURING THE ENTIRE ADVANCE PREPARATION AND CLOSURE SEQUENCE WHERE COMPLETE BLOCKAGE OF TRAFFIC IS REQUIRED.

DURING A TRAFFIC SIGNAL INSTALLATION.

LAW ENFORCEMENT OFFICERS (LEOS) SHOULD NOT BE USED WHERE THE OMUTCD INTENDS THAT FLAGGERS BE USED. THE LEOS ARE CONSIDERED TO BE EMPLOYED BY THE CONTRACTOR AND THE CONTRACTOR SHALL BE RESPONSIBLE FOR THEIR ACTIONS. ALTHOUGH THEY ARE EMPLOYED BY THE CONTRACTOR, THE PROJECT ENGINEER SHALL HAVE CONTROL OVER THEIR PLACEMENT. THE OFFICIAL PATROL CAR SHALL BE A PUBLIC SAFETY VEHICLE AS REQUIRED BY THE OHIO REVISED CODE. THE CONTRACTOR SHALL MAKE ARRANGEMENTS FOR THESE SERVICES WITH:

THE OHIO STATE HIGHWAY PATROL
CANTON PATROL POST
4710 SHUFFLE ROAD
NORTH CANTON, OHIO 44720
PHONE: (330)-433-6200
FAX: (330)-433-6230

IF AFTER CONTACTING THE OHIO HIGHWAY PATROL, IT IS DETERMINED THAT THEY CANNOT SUPPLY THE LEO, THEN AN AUTHORIZED MUNICIPAL OR COUNTY POLICE OFFICER WITH A MARKED AND FLASHER-LIGHT EQUIPPED OFFICAL POLICE OR PATROL CAR SHALL BE PROVIDED.

LAW ENFORCEMENT OFFICERS WITH PATROL CAR REQUIRED BY THE TRAFFIC MAINTENANCE TASKS ABOVE SHALL BE PAID FOR ON AN HOURLY BASIS UNDER ITEM 614 LAW ENFORCEMENT OFFICER WITH PATROL CAR. THE FOLLOWING ESTIMATED QUANTITIES HAVE BEEN CARRIED TO THE GENERAL SUMMARY:

ITEM 614, LAW ENFORCEMENT OFFICER WITH PATROL CAR 32 HOURS

THE HOURS PAID SHALL INCLUDE THE MINIMUM SHOW-UP TIME REQUIRED BY THE LAW ENFORCEMENT AGENCY INVOLVED.

IF THE CONTRACTOR WISHES TO UTILIZE LEO'S FOR FLAGGING AND TRAFFIC CONTROL OTHER THAN FOR THAT REQUIRED IN THESE PLANS, HE MAY DO SO AT HIS OWN EXPENSE. PAYMENT FOR THE EXCESS ABOVE THE CONTRACT REQUIREMENTS WILL BE INCLUDED UNDER ITEM 614 MAINTAINING TRAFFIC.

CALCULATED LOB
CHECKED MAH

MAINTENANCE OF TRAFFIC GENERAL NOTES

STA-21-12.48

G:\CIVIL\20041054\00\STA\25433\MOT\SHEETS\25433MN001.DGN
2/6/2007
9:02:27 AM
SVARRECCHIA

ITEM 614 - MAINTAINING TRAFFIC

THIS ITEM SHALL CONSIST OF MAINTENANCE OF TRAFFIC ON EXISTING ROADWAYS AND RAMPS IN ACCORDANCE WITH THE OHIO MANUAL OF UNIFORM TRAFFIC CONTROL DEVICES FOR STREETS AND HIGHWAYS, CURRENT EDITION, LATEST REVISION, THE SPECIFICATIONS AND THE FOLLOWING:

1. A MINIMUM OF ONE (1) ELEVEN FOOT LANE IN EACH DIRECTION SHALL BE MAINTAINED ON THE EXISTING PAVEMENT (COMPLETED PAVEMENT AND TEMPORARY PAVEMENT) DURING CONSTRUCTION OF THE WORK.

2. THE CONTRACTOR SHALL INFORM THE DISTRICT OFFICE, (330) 786-2211 EXT. 209, EIGHTEEN (18) DAYS PRIOR TO THE BEGINNING OF WORK.

3. CONES SHALL NOT BE ACCEPTABLE TRAFFIC CONTROL DEVICES FOR LANE RESTRICTIONS OR LANE REDUCTIONS THAT ARE IN OPERATION ONE-HALF HOUR AFTER SUNSET OR ONE HALF-HOUR BEFORE SUNRISE. ALL NIGHTTIME LANE RESTRICTIONS SHALL REQUIRE DRUMS OR BARRICADES AT A MAXIMUM SPACING OF FIFTY (50) FEET. WEIGHTED CHANNELIZERS MAY BE USED IN ACCORDANCE WITH THE ADDITIONAL NOTE HEREIN.

4. THE CONTRACTOR SHALL FURNISH, ERECT, MAINTAIN AND SUBSEQUENTLY REMOVE ALL FLAGS, BARRICADES, SIGNS, SIGN SUPPORTS AND FURNISH AND MAINTAIN ALL FLAGGERS, WATCHERS AND INCIDENTALS RELATED THERETO.

5. NO FULL DEPTH BRIDGE REPAIR SHALL BE PERFORMED OVER AN OPEN LANE. A SAFETY NET OR PLATFORM SHALL BE REQUIRED TO PROTECT THE ROADWAY, RAILROAD, BIKE PATH OR STREAM DURING THE REMOVAL OF THE EXISTING CONCRETE PARAPET AND DECK. THE CONTRACTOR SHALL PROVIDE A SAFETY NET OR PLATFORM OF SUITABLE STRENGTH ON THE UNDERSIDE OF THE DECK. THE DESIGN OF THE NET OR PLATFORM SHALL CONFORM WITH OSHA REQUIREMENTS AND THE APPROVAL OF THE ENGINEER AND SHALL REMAIN IN PLACE UNTIL THE WORK HAS BEEN COMPLETED AND ACCEPTED OR AS DIRECTED BY THE ENGINEER. THE CONTRACTOR SHALL SUBMIT A DEMOLITION PLAN AND SAFETY NET OR PLATFORM DESIGN 10 DAYS PRIOR TO COMMENCING ANY DEMOLITION FOR APPROVAL BY THE ENGINEER. THE SUBMITTAL SHALL BE IN WRITING TO THE DISTRICT CONSTRUCTION ENGINEER WITH A COPY TO THE PROJECT ENGINEER.

6. UNDER NO CIRCUMSTANCES SHALL THE CONTRACTOR BE PERMITTED TO HAVE SUCCESSIVE WORK ZONES UNLESS THE DISTANCE BETWEEN THE DRUMS, BARRICADES OR CONES EXCEEDS TWO (2) MILES RURAL OR ONE (1) MILE URBAN.

7. ONLY DURING OFF-PEAK PERIODS (ie. ANY PERIOD OTHER THAN 6-8 AM AND 3-6PM) SHALL THE CONTRACTOR INSTALL AND SUBSEQUENTLY RESET ALL TRAFFIC CONTROL NECESSARY FOR THE WORK ZONE FOR EACH CONSTRUCTION PHASE.

8. THE EXISTING PAVEMENT MARKINGS SHOWN WERE OBTAINED FROM A COMBINATION OF FIELD SURVEY, RECORD PLAN INFORMATION AND FIELD MEASUREMENT. THE CONTRACTOR SHALL FIELD VERIFY THE EXISTING CONDITIONS PRIOR TO PERFORMING ANY MODIFICATIONS TO THE EXISTING PAVEMENT MARKINGS.

9. ALTHOUGH ESTIMATES FOR TEMPORARY EXCAVATION, EMBANKMENT AND TEMPORARY DRAINAGE FACILITIES MAY BE SHOWN ON THE PLAN DETAILS, THESE ITEMS SHALL BE CONSIDERED INCIDENTAL TO, AND INCLUDED WITH THE LUMP SUM PAYMENT FOR ITEM 614 - MAINTAINING TRAFFIC, AS PER PLAN.

FOR QUANTITIES, SEE SHEET NO. 13 .

MAINTENANCE OF TRAFFIC SIGNAL/ FLASHER INSTALLATION

BEFORE ANY WORK IS STARTED REPRESENTATIVES OF THE STATE, THE MAINTAINING AGENCY, AND THE CONTRACTOR SHALL MAKE A VISUAL INSPECTION OF THE EXISTING SIGNAL/FLASHER INSTALLATIONS TO BE MAINTAINED. DURING THIS INSPECTION A WRITTEN RECORD OF THE CONDITION OF THE EXISTING SIGNAL/FLASHER SHALL BE MADE BY THE STATE'S REPRESENTATIVE. THIS WRITTEN REPORT SHALL NOTE INDIVIDUAL ITEMS WHICH ARE NOT IN WORKING ORDER. THE COMPLETED REPORT SHALL BE SIGNED BY THE REPRESENTATIVES OF THE STATE, THE MAINTAINING AGENCY, AND THE CONTRACTOR.

AFTER THE REPORT HAS BEEN SIGNED BY ALL PARTIES, THE SIGNAL INSTALLATION SHALL BE TURNED OVER TO THE CONTRACTOR, WHO SHALL THEN BE REQUIRED TO MAINTAIN THE TRAFFIC SIGNAL INSTALLATIONS WITHIN THE PROJECT UNDER THE FOLLOWING CONDITIONS:

A) EXISTING SIGNAL/FLASHER INSTALLATIONS WHICH THE PLANS REQUIRE THE CONTRACTOR TO ADJUST, MODIFY, ADD ONTO OR REMOVE, OR WHICH THE CONTRACTOR ACTUALLY ADJUSTS, MODIFIES OR OTHERWISE DISTURBS INCLUDING DAMAGE DUE TO UTILITY RELOCATION. THE CONTRACTOR SHALL BE RESPONSIBLE FOR THE ENTIRE INSTALLATION AT AN INTERSECTION FROM THE TIME THE INSTALLATION IS FIRST DISTURBED, WHETHER FROM UTILITY WORK OR FROM THE CONTRACTOR UNTIL THE INSTALLATION HAS BEEN SUBSEQUENTLY REMOVED OR MODIFIED AND THE WORK IS ACCEPTED.

B) NEW OR REUSED SIGNAL/FLASHER INSTALLATIONS OR DEVICES, INSTALLED BY THE CONTRACTOR. THE CONTRACTOR SHALL BE RESPONSIBLE FOR MAINTENANCE OF THESE FROM THE TIME OF INSTALLATION UNTIL THE WORK IS ACCEPTED.

THE CONTRACTOR SHALL CORRECT AS QUICKLY AS POSSIBLE ALL OUTAGES OR MALFUNCTIONS. AT THE PRE-CONSTRUCTION MEETING, THE CONTRACTOR SHALL PROVIDE THE MAINTAINING AGENCY AND THE PROJECT ENGINEER SUCH ADDRESSES AND PHONE NUMBERS WHERE HIS MAINTENANCE FORCES CAN BE CONTACTED. THE CONTRACTOR SHALL PROVIDE ONE OR MORE PERSONS TO RECEIVE ALL CALLS AND DISPATCH THE NECESSARY MAINTENANCE FORCES TO CORRECT OUTAGES. SUCH A PERSON OR PERSONS MAY BE USED TO PERFORM OTHER DUTIES AS LONG AS PROMPT ATTENTION IS GIVEN TO THESE CALLS AND A PERSON IS READILY AVAILABLE CONTINUOUSLY 24 HOURS A DAY, 7 DAYS A WEEK. THE CONTRACTOR SHALL HAVE THE MALFUNCTION CORRECTED AND/OR REPAIRED TO THE SATISFACTION OF THE ENGINEER WITHIN EIGHT HOURS OF THE NOTIFICATION OR LIQUIDATED DAMAGES OF $500 PER HOUR SHALL BE ASSESSED THE CONTRACTOR.

ALL LAMP OUTAGES, CABLE OUTAGES, ELECTRICAL FAILURES, EQUIPMENT MALFUNCTIONS AND MISALIGNED SIGNAL HEADS SHALL BE CORRECTED TO THE SATISFACTION OF THE PROJECT ENGINEER WITH THE SIGNAL BACK IN SERVICE WITHIN FOUR (4) HOURS AFTER THE CONTRACTOR HAS BEEN NOTIFIED OF THE OUTAGES.

IN THE EVENT NEW SIGNALS ARE DAMAGED PRIOR TO ACCEPTANCE ALL DAMAGED EQUIPMENT EXCEPT POLES AND CONTROL EQUIPMENT SHALL BE REPLACED BY THE CONTRACTOR TO THE SATISFACTION OF THE PROJECT ENGINEER WITH THE SIGNAL BACK IN SERVICE WITHIN EIGHT (8) HOURS AFTER THE CONTRACTOR IS NOTIFIED OF THE OUTAGE. THE CONTRACTOR SHALL ARRANGE FOR FULL TRAFFIC CONTROL UNTIL THE SIGNAL IS BACK IN OPERATION.

IF POLES AND/OR CONTROL EQUIPMENT ARE DAMAGED AND MUST BE REPLACED, THE CONTRACTOR SHALL MAKE TEMPORARY REPAIRS AS NECESSARY TO BRING THE SIGNAL BACK INTO FULL OPERATION WITHIN THE ALLOWED EIGHT (8) HOUR PERIOD, AND SHALL MAKE PERMANENT REPAIRS OR REPLACEMENT AS SOON AS POSSIBLE.

NONE OF THE ABOVE SHALL BE CONSTRUED AS COLLECTIVE OR CONSECUTIVE OUTAGE TIME PERIODS AT ANY ONE LOCATION. WHERE MORE THAN ONE OUTAGE OCCURS AT ANY ONE LOCATION, THEN THE ALLOTTED TIME LIMIT SHALL BE FOR THE WORST SINGLE OUTAGE.

WHERE OUTAGES ARE THE DIRECT RESULT OF A VEHICLE ACCIDENT THE RESPONSE OF THE CONTRACTOR SHALL BE AS OUTLINED ABOVE. THE CONTRACTOR SHALL BE RESPONSIBLE FOR COLLECTION OF ANY DAMAGES FOR THIS WORK FROM THOSE PARTIES RESPONSIBLE FOR THE DAMAGES AS PER 107.16.

WHERE THE CONTRACTOR HAS FAILED TO OR CANNOT RESPOND TO AN OUTAGE OR SIGNAL EQUIPMENT MALFUNCTION, AT THESE LOCATIONS WITHIN HIS RESPONSIBILITY, WITHIN PERIODS AS SPECIFIED ABOVE, THE PROJECT ENGINEER MAY INVOKE THE PROVISIONS OF SECTION 105.15 AND ANY SUBSEQUENT BILLINGS TO THE STATE OR THE CITY OF MASSILLON FOR POLICE SERVICES AND MAINTENANCE SERVICES BY STATE OR CITY FORCES SHALL BE DEDUCTED FROM MONEYS DUE OR TO BECOME DUE THE CONTRACTOR IN ACCORDANCE WITH PROVISIONS OF SECTION 105.15. IN ADDITION TO THESE BILLINGS, THE CONTRACTOR SHALL BE ASSESSED LIQUIDATED DAMAGES OF $500/HOUR FOR EACH HOUR BEYOND THE ALLOWED EIGHT (8) HOUR PERIOD THAT THE SIGNAL IS INOPERATIVE.

THE CONTRACTOR SHALL PROVIDE THE MAINTENANCE SERVICES ENTIRELY WITH HIS FORCES OR HE MAY CHOOSE TO ENTER INTO A MUTUALLY ACCEPTABLE AGREEMENT WITH THE LOCAL MAINTAINING AGENCY TO PROVIDE THE MAINTENANCE.

THE CONTRACTOR SHALL INFORM THE PROJECT ENGINEER, IN WRITING, OF THE MAINTENANCE METHOD SELECTED.
THE CONTRACTOR SHALL BE RESPONSIBLE FOR ANY DAMAGE DUE TO ANY TRAFFIC SIGNAL COMPONENTS REQUIRED TO BE HANDLED DURING THE RELOCATION OF POLES AND REVISIONS TO THE SIGNAL SYSTEM.

WHEN A TRAFFIC SIGNAL MUST BE TAKEN OUT OF SERVICE BY THE CONTRACTOR, DUE TO CONSTRUCTION PROCEDURES, THIS OUTAGE SHALL NOT EXCEED FOUR (4) HOURS AND SHALL NOT INCLUDE THE HOURS OF 6:00AM TO 8:00AM AND 4:00PM TO 6:00PM. ANY SIGNALIZED INTERSECTION, WHERE THE SIGNAL IS OUT OF SERVICE DUE TO CONSTRUCTION PROCEDURES, OR DUE TO AN OUTAGE OR MALFUNCTION OF EQUIPMENT AS DESCRIBED ABOVE, SHALL BE PROTECTED, BY THE CONTRACTOR, BY THE INSTALLATION OF TEMPORARY "STOP" SIGNS, EXCEPT FOR THE FOLLOWING INTERSECTIONS WHICH SHALL BE PROTECTED BY OFF-DUTY POLICE, HIRED BY THE CONTRACTOR.

1. S.R. 21/ LAKE AVENUE

ANY VEHICULAR TRAFFIC SIGNAL HEAD, EITHER NEW OR EXISTING WHICH WILL BE OUT OF OPERATION SHALL BE COVERED, AS DESCRIBED IN 632.24.

THE CONTRACTOR SHALL MAINTAIN COMPLETE RECORDS OF MALFUNCTIONS INCLUDING: 1. TIME OF NOTIFICATION OF MALFUNCTION; 2. TIME OF WORK CREWS ARRIVAL TO CORRECT THE MALFUNCTION; 3. ACTIONS TAKEN TO CORRECT THE MALFUNCTION, INCLUDING A LIST OF PARTS REPAIRED OR REPLACED; 4. A DIAGNOSIS OF REASON FOR THE MALFUNCTION AND PROBABILITY OF REOCCURRENCE; AND 5. TIME OF COMPLETION OF REPAIR AND SYSTEM RESTORED TO FULL SERVICE. A COPY OF THESE RECORDS SHALL BE PROVIDED TO THE ENGINEER WITHIN THREE (3) WORKING DAYS FOLLOWING COMPLETION OF EACH REPAIR.

ALL COSTS RESULTING FROM THE ABOVE REQUIREMENTS SHALL BE CONSIDERED TO BE INCLUDED TO AND INCLUDED IN THE LUMP SUM PRICE BID FOR ITEM 614 - MAINTAINING TRAFFIC.

ITEM 615 - PAVEMENT FOR MAINTAINING TRAFFIC, CLASS A, AS PER PLAN

IN ADDITION TO THE REQUIREMENTS OF 615, THIS ITEM REPLACES THE 7 INCHES OF ITEM 301 ASPHALT CONCRETE AGGREGATE BASE AND THE 4 INCHES OF ITEM 304 AGGREGATE BASE WITH 9 INCHES OF ITEM 302 ASPHALT CONCRETE AGGREGATE BASE. RIGID TEMPORARY PAVEMENT SHALL BE CLASS C CONCRETE CONFORMING TO ITEM 452, IN LIEU OF CLASS F CONCRETE.

ON THIS PROJECT THE CLASS A PAVEMENT FOR MAINTAINING TRAFFIC SHALL BE 18 FEET WIDE AND THE ROADWAY WIDTH SHALL NOT BE LESS THEN 22 FEET OUT TO OUT OF SHOULDERS. THE EXISTING PAVEMENT/ SHOULDER SHALL BE SAWCUT AS PER 203.04(E).

THE FOLLOWING ESTIMATED QUANTITIES HAVE BEEN CALCULATED IN THE SUBSUMMARIES AND INCLUDED IN THE GENERAL SUMMARY TO BE USED IN CONSTRUCTING THE PAVEMENT FOR MAINTAINING TRAFFIC, CLASS A, AS PER PLAN.

ITEM 615 - ROADS FOR MAINTAINING TRAFFIC 1 LUMP SUM
ITEM 615 - PAVEMENT FOR MAINTAINING TRAFFIC, CLASS A, AS PER PLAN 2819 SQ. YD.
ITEM 411 - STABILIZED CRUSHED AGGREGATE 135 CU. YD.

UPON COMPLETION OF THE PROJECT, THE CONTRACTOR SHALL REMOVE THE PAVEMENT FOR MAINTAINING TRAFFIC INCLUDING ANY TEMPORARY DRAINAGE FACILITIES. THE AFFECTED EXISTING EARTH MEDIAN AND PAVED SHOULDERS SHALL BE RESTORED TO THEIR ORIGINAL CONDITION AS DIRECTED BY THE ENGINEER AND AS PER 615.08.

PAVEMENT FOR MAINTAINING TRAFFIC SHALL NOT BE OPENED TO TRAFFIC UNTIL ALL WORK ZONE TRAFFIC CONTROL DEVICES, SIGNS, PAVEMENT MARKINGS AND PORTABLE CONCRETE BARRIERS HAVE BEEN ERECTED AND APPROVED BY THE ENGINEER.

ALTHOUGH ESTIMATES FOR TEMPORARY EXCAVATION, EMBANKMENT AND TEMPORARY DRAINAGE FACILITIES MAY BE SHOWN ON THE PLAN DETAILS, THESE ITEMS SHALL BE CONSIDERED INCIDENTAL TO, AND INCLUDED WITH PAYMENT FOR ITEM 615 - PAVEMENT FOR MAINTAINING TRAFFIC, CLASS A AS PER PLAN.

ITEM 616 - DUST CONTROL

THE CONTRACTOR SHALL SUPPLY WATER FOR DUST CONTROL AS DIRECTED BY THE ENGINEER. THE FOLLOWING CONTINGENCY QUANTITIES HAVE BEEN INCLUDED FOR DUST CONTROL PURPOSES:

ITEM 616 - WATER - 10 M GAL
ITEM 616 - CALCIUM CHLORIDE - 1 TON

CALCULATED LOB CHECKED MAH

MAINTENANCE OF TRAFFIC GENERAL NOTES

STA-21-12.48

\\AKRNAS\DATA\CIVIL\28485A\ADMIN\STA\28433\NOTSHEETS\28433MN002.DGN
8/9/2007
2:10:21 PM
DTHOTER

CONSTRUCTION ACCESS POINTS

CONSTRUCTION ACCESS POINT LOCATIONS MAY BE SELECTED BY THE CONTRACTOR, WITH THE APPROVAL OF THE ENGINEER. THEY SHALL BE IN ACCORDANCE WITH THE DETAILS IN THE PLANS. THE LOCATIONS SHALL BE SELECTED FOR GOOD SIGHT DISTANCE AND EASE OF ACCESS FOR ENTERING VEHICLES. AVOID LOCATIONS JUST BEYOND CREST VERTICAL CURVES ON CURVES TO THE SIDE OF THE ROAD WITH THE BARRIER, JUST BEYOND OVERHEAD STRUCTURES, UPGRADES, ETC. IN THE EVENT THAT THE ENGINEER DETERMINES THAT THE ACCESS POINT DOES NOT FUNCTION IN A SAFE MANNER, HE SHALL ORDER IT IMMEDIATELY CLOSED AT NO ADDITIONAL COST TO THE STATE. ACCESS POINTS, WHICH INCLUDE THE SECONDARY OPENING, SHALL ALSO INCLUDE AN OPERABLE IMPACT ATTENUATOR AS DETAILED. WHEN AN IMPACT ATTENUATOR BECOMES INOPERABLE FOR ANY REASON, THE ENGINEER SHALL ORDER THE SECONDARY OPENING TO BE IMMEDIATELY CLOSED WITH PORTABLE CONCRETE BARRIER. ACCESS POINTS MAY BE RELOCATED SUBJECT TO THE APPROVAL OF THE ENGINEER, AS NECESSARY TO ACCOMPLISH CONSTRUCTION ACTIVITIES.

ALL COST FOR RELOCATION OF PORTABLE CONCRETE BARRIER, INSTALLATION, REPAIR, REPLACEMENT, AND REMOVAL OF IMPACT ATTENUATORS, GRADING FOR ACCESS DRIVES, AND RELATED COSTS ARE INCLUDED IN THE LUMP SUM BID PRICE FOR ITEM 614 - MAINTAINING TRAFFIC.

FLOODLIGHTING

FLOODLIGHTING OF THE WORK SITE FOR OPERATIONS CONDUCTED DURING NIGHT TIME PERIODS SHALL BE ACCOMPLISHED SO THAT THE LIGHTS DO NOT CAUSE GLARE TO THE DRIVERS ON THE ROADWAY. TO ENSURE THE ADEQUACY OF THE FLOODLIGHT PLACEMENT, THE CONTRACTOR AND THE ENGINEER SHALL DRIVE THROUGH THE WORK SITE EACH NIGHT WHEN THE LIGHTING IS IN PLACE AND THE PLACEMENT AND SHIELDING SHALL BE ADJUSTED TO THE SATISFACTION OF THE ENGINEER BEFORE WORK PROCEEDS. FLOODLIGHTING PLACEMENT SHALL ALSO BE SUCH THAT IT DOES NOT IMPACT ANY RESIDENTIAL PROPERTIES WITHIN OR NEAR THE CONSTRUCTION ZONE.

PAYMENT FOR ALL LABOR, EQUIPMENT AND MATERIALS SHALL BE INCLUDED IN THE LUMP SUM CONTRACT PRICE FOR ITEM 614 - MAINTAINING TRAFFIC.

EARTHWORK FOR MAINTAINING TRAFFIC

THE FOLLOWING QUANTITIES HAVE BEEN INCLUDED IN THE PLAN FOR INFORMATION ONLY:

EXCAVATION FOR MAINTAINING TRAFFIC 517 CU. YD.
EMBANKMENT FOR MAINTAINING TRAFFIC 250 CU. YD.

ITEM 614 - WORK ZONE CROSSOVER LIGHTING SYSTEM

THIS WORK SHALL CONSIST OF FURNISHING, ERECTING, OPERATING, MAINTAINING AND REMOVING A WORK ZONE LIGHTING SYSTEM FOR A SINGLE CROSSOVER, OR OVERLAPPING A PAIR OF CROSSOVERS ON A TWO-LANE, TWO-WAY OPERATION. THE SYSTEM SHALL BE AS SHOWN ON SCD MT-100.00. THE CONTRACTOR SHALL ARRANGE FOR AND PAY FOR POWER. ALL MATERIALS AND CONSTRUCTION SHALL COMPLY WITH APPLICABLE PORTIONS OF 625 AND 725 EXCEPT: THE PERFORMANCE TEST OF 625.19F, AND CERTIFIED DRAWING REQUIREMENT OF 625.04, ARE WAIVED AND USED MATERIALS IN GOOD CONDITION ARE ACCEPTABLE.

POLES MAY BE LESS THAN 30 FT FROM THE EDGE OF PAVEMENT WHEN BEHIND GUARDRAIL. ADDITIONAL POLE LINES, CABLES AND APPURTENANCES NECESSARY TO FURNISH POWER TO THE LIGHTING SYSTEM SHALL BE INCLUDED IN THIS ITEM. SERVICE POLES SHALL BE POSITIONED WITH THE SAME CONSTRAINTS AS THE LIGHTING POLES AS A MINIMUM.

PAYMENT WILL BE MADE AT THE UNIT PRICE PER EACH FOR ITEM 614, WORK ZONE CROSSOVER LIGHTING SYSTEM THROUGHOUT ALL PHASES OF WORK WHEN THE CROSSOVER ROADWAYS ARE USED.

THE FOLLOWING QUANTITY HAS BEEN CARRIED TO THE GENERAL SUMMARY:

ITEM 614 - WORK ZONE CROSSOVER LIGHTING SYSTEM 2 EACH

WORK ZONE INCREASED PENALTIES SIGN (R11-H5A)

R11-H5A-48 SIGNS SHALL BE FURNISHED, ERECTED, AND MAINTAINED IN GOOD CONDITION AND/OR REPLACED AS NECESSARY AND SUBSEQUENTLY REMOVED BY THE CONTRACTOR. SIGNS SHALL BE MOUNTED AT THE APPROPRIATE OFFSETS AND ELEVATIONS AS PRESCRIBED BY THE OHIO MANUAL OF UNIFORM TRAFFIC CONTROL DEVICES. THEY SHALL BE MAINTAINED ON SUPPORTS MEETING CURRENT SAFETY CRITERIA.

THE SIGNS MAY BE ERECTED OR UNCOVERED NO MORE THAN FOUR HOURS BEFORE THE ACTUAL START OF WORK. THE SIGNS SHALL BE REMOVED OR COVERED NO LATER THAN FOUR HOURS FOLLOWING RESTORATION OF ALL LANES TO TRAFFIC WITH NO RESTRICTIONS, OR SOONER AS DIRECTED BY THE ENGINEER. TEMPORARY SIGN COVERING AND UNCOVERING DUE TO TEMPORARY LANE RESTORATIONS SHALL BE GUIDED BY THE FOUR-HOUR LIMITATIONS STATED ABOVE. SUCH LANE RESTORATIONS SHOULD BE EXPECTED TO REMAIN IN EFFECT FOR 30 OR MORE CONSECUTIVE CALENDAR DAYS, SUCH AS DURING WINTER SHUT-DOWNS.

(THE SIGNS ON THE MAINLINE SHALL BE DUAL MOUNTED UNLESS NOT PHYSICALLY POSSIBLE. THE FIRST SIGN SHALL BE PLACED BETWEEN THE ROAD WORK AHEAD (W20-1) SIGN AND THE NEXT SIGN IN THE SEQUENCE. SIGNS SHALL BE ERECTED ON EACH ENTRANCE RAMP AND EVERY 2 MILES (3 KILOMETERS) THROUGH THE CONSTRUCTION WORK LIMITS. SIGNS ON THE MAINLINE SHALL BE R11-H5A-48. SIGNS USED ON THE RAMPS SHALL BE R11-H5A-24. R11-H5A-24 SIGNS MAY BE USED IN THE MEDIAN IN LIEU OF R11-H5A-48 SIGNS IF IT IS NOT PHYSICALLY POSSIBLE TO PROVIDE R11-H5A-48 SIGNS IN THE MEDIAN.)

THE CONTRACTOR MAY USE SIGNS AND SUPPORTS IN USED, BUT GOOD, CONDITION PROVIDED THE SIGNS MEET CURRENT ODOT SPECIFICATIONS. SIGN FACES SHALL BE REFLECTORIZED WITH TYPE G SHEETING COMPLYING WITH THE REQUIREMENTS OF CMS 730.19.

WORK ZONE INCREASED PENALTIES SIGNS AND SUPPORTS WILL BE MEASURED AS THE NUMBER OF SIGN INSTALLATIONS, INCLUDING THE SIGN AND NECESSARY SUPPORTS. IF A SIGN AND SUPPORT COMBINATION IS REMOVED AND REERECTED AT ANOTHER LOCATION AS DIRECTED BY THE ENGINEER, IT SHALL BE CONSIDERED ANOTHER UNIT.

PAYMENT FOR ACCEPTED QUANTITIES, COMPLETE, IN PLACE WILL BE MADE AT THE CONTRACT UNIT PRICE. PAYMENT SHALL BE FULL COMPENSATION FOR ALL MATERIALS, LABOR, INCIDENTALS AND EQUIPMENT FOR FURNISHING, ERECTING, MAINTAINING, COVERING DURING SUSPENSION OR WORK AND REMOVAL OF THE SIGN AND SUPPORT.

ITEM 614 - WORK ZONE INCREASED PENALTIES SIGN 4 EACH

ITEM 614 - BARRIER REFLECTORS AND/OR OBJECT MARKERS

BARRIER REFLECTORS AND/OR OBJECT MARKERS SHALL BE INSTALLED ON ALL PORTABLE CONCRETE BARRIER USED FOR TRAFFIC CONTROL. BARRIER REFLECTORS, OBJECT MARKERS AND THEIR INSTALLATION SHALL CONFORM TO CMS 626, EXCEPT THAT THE SPACING SHALL BE 50 FEET. QUINTITIES FOR ITEM 614 BARRIER REFLECTOR, TYPE B AND ITEM 614 OBJECT MARKER, 2-WAY HAVE BEEN PROVIDED IN THE MAINTENANCE OF TRAFFIC SUBSUMMARY SHEETS.

TRAFFIC CONTROL INSPECTOR

THE CONTRACTOR SHALL DESIGNATE AN INDIVIDUAL OTHER THAN THE SUPERINTENDENT AND SUBJECT TO THE APPROVAL OF THE ENGINEER, TO CONTINUOUSLY INSPECT ALL TRAFFIC CONTROL DEVICES WHENEVER CONSTRUCTION WORK IS BEING PERFORMED WITHIN THE WORK LIMITS OF THE PROJECT. THE DESIGNATED INDIVIDUAL SHALL ALSO INSPECT ALL TRAFFIC DEVICES AT THE BEGINNING AND AT THE END OF EACH WORK DAY. THE DESIGNATED INDIVIDUAL OR A QUALIFIED RESPENTATIVE SHALL ALSO BE AVAILABLE ON AN AROUND THE CLOCK BASIS TO REPAIR AND/OR REPLACE DAMAGED OR MISSING TRAFFIC CONTROL DEVICES. THESE INDIVIDUALS SHALL BE EQUIPPED WITH CELLULAR PHONES AND THEIR NAMES AND PHONE NUMBERS SHALL BE GIVEN TO THE PROJECT ENGINEER AT THE PRE-CONSTRUCTION MEETING. THE DESIGNATED INDIVIDUAL MAY HAVE OTHER CONSTRUCTION RELATED DUTIES AS LONG AS IMMEDIATE ATTENTION IS GIVEN TO TRAFFIC CONTROL. PAYMENT FOR THE SERVICES OF THE TRAFFIC CONTROL INSPECTOR SHALL BE INCLUDED IN THE LUMP SUM PRICE BID FOR ITEM 614 MAINTAINING TRAFFIC.

WEIGHTED CHANNELIZERS

THE WEIGHTED CHANNELIZER SHALL BE PREDOMINANTLY ORANGE IN COLOR AND SHALL BE MADE OF A LIGHTWEIGHT, FLEXIBLE, AND DEFORMABLE MATERIAL. THEY SHALL BE AT LEAST 42 INCHES IN HEIGHT WITH A WEIGHTED BASE. THEY MAY HAVE A "HANDLE" OR LIFTING DEVICE WHICH EXTENDS ABOVE THE 42-INCH MINIMUM HEIGHT.

THE MARKINGS ON THE WEIGHTED CHANNELIZER SHALL BE HORIZONTAL, CIRCUMFERENTIAL, ALTERNATING ORANGE AND WHITE RETROREFLECTIVE STRIPES 6 INCHES WIDE. EACH WEIGHTED CHANNELIZER SHALL HAVE A MINIMUM OF TWO ORANGE AND TWO WHITE STRIPES. ANY NON-RETROREFLECTIVE SPACES BETWEEN THE HORIZONTAL ORANGE AND WHITE STRIPES SHALL NOT EXCEED 2 INCHES WIDE. THE WEIGHTED CHANNELIZER SHALL HAVE A 4-INCH MINIMUM WIDTH, REGARDLESS OF ORIENTATION.

ON FREEWAYS AND MULTILANE HIGHWAYS:
USE OF WEIGHTED CHANNELIZERS ON FREEWAYS AND MULTILANE HIGHWAYS SHALL BE LIMITED TO SHORT-TERM OPERATION, GENERALLY TWELVE HOURS OR LESS, FOR EITHER DAY OR NIGHT. UPON COMPLETION OF WORK WITHIN THE ABOVE NOTED TIME PERIOD, THE WEIGHTED CHANNELIZERS SHALL BE REMOVED. THE WEIGHTED CHANNELIZERS MAY AGAIN BE PLACED ON THE HIGHWAY WHEN THE WORK IS TO RESUME ON THE FOLLOWING DAY OR NIGHT. ANY LANE CLOSURE USING CHANNELIZING DEVICES, EXPECTED TO REMAIN FOR MORE THAN TWELVE HOURS, SHALL REQUIRE THE USE OF DRUMS OR BARRIERS.

WHEN USED AT NIGHT, WEIGHTED CHANNELIZERS SHALL ONLY BE PLACED IN THE "TANGENT AREA". THE "TANGENT AREA" IS DEFINED AS THE AREA AFTER THE TRANSITION TAPER WHERE THE WORK TAKES PLACE. DRUMS SHALL BE USED IN THE TRANSITION TAPERS FOR NIGHT OPERATIONS.

ON OTHER HIGHWAYS:
THERE ARE NO DURATIONS OF WORK RESTRICTIONS FOR USE OF WEIGHTED CHANNELIZERS ON ALL OTHER TYPES OF HIGHWAYS, DAY OR NIGHT. ON THESE ROADWAYS THE WEIGHTED CHANNELIZER MAY BE USED IN THE TRANSITION TAPERS AS WELL AS IN THE TANGENT AREAS, DAY OR NIGHT.

MAXIMUM SPACING OF THE WEIGHTED CHANNELIZER SHALL BE 40 FEET.

STEPS SHOULD BE TAKEN TO ENSURE THAT THE WEIGHTED CHANNELIZERS WILL NOT BE BLOWN OVER OR DISPLACED BY WIND OR MOVING TRAFFIC. BALLASTS SHOULD NOT PRESENT A HAZARD IF THE WEIGHTED CHANNELIZERS ARE INADVERTENTLY STRUCK, NOR SHOULD THEY AFFECT THE VISIBILITY OF THE WEIGHTED CHANNELIZERS. ALL BALLASTS USED SHOULD BE IN ACCORDANCE WITH THE MANUFACTURE'S SPECIFICATIONS.

TEMPORARY TRAFFIC SIGNAL TIMINGS

THE TRAFFIC SIGNAL INSTALLATION AT THE STATE ROUTE 21 / LAKE AVENUE INTERSECTION IS MAINTAINED BY THE CITY OF MASSILLON. IT SHALL BE THE CITY OF MASSILLON'S RESPONSIBILITY TO ADJUST THE TIMINGS DURING CONSTRUCTION TO PROVIDE FOR ADEQUATE PEDESTRIAN CLEARANCE INTERVALS. THE REQUIRED PEDESTRIAN INTERVAL TO CROSS SR 21 ALONG THE TOW PATH TRAIL DETOUR ROUTE IS 27.0 SECONDS.

CONTRACTOR ACCESS

ODOT HAS OBTAINED PERMISSION FROM THE NORFOLK AND SOUTHERN RAILROAD TO ALLOW OUR CONTRACTOR TO USE THE CORRIDOR ADJACENT TO THE ABANDONED RAILROAD TRACKS TO ACCESS PIER 2 (LEFT AND RIGHT). THIS CORRIDOR WILL BE RESTORED TO SIMILAR CONDITION AND WILL BE SUBJECT TO THE APPROVAL OF THE PROJECT ENGINEER AND THE RAILROAD.

CALCULATED LOB
CHECKED MAH

MAINTENANCE OF TRAFFIC GENERAL NOTES

STA-21-12.48

\\ARFNB1\DATA\CIVIL\2004054\MB\STA2543\MOT\SHEETS\2543MN003.DGN
8/24/2007
7:55:38 AM
DTROYER

ITEM 614 - WORKZONE IMPACT ATTENUATOR FOR 24" WIDE HAZARDS (UNIDIRECTIONAL)

THIS ITEM SHALL CONSIST OF FURNISHING AND INSTALLING ONE OF THE FOLLOWING IMPACT ATTENUATORS:

1. THE QUADGUARD CZ, (24 INCHES (610 MILLIMETERS) WIDE SIX-BAY) WORK ZONE IMPACT ATTENUATOR MANUFACTURED BY ENERGY ABSORPTION SYSTEMS, INC., 35 EAST WACKER DRIVE, CHICAGO, IL 60601 (TELEPHONE: 312-467-6750).

   THE LENGTH OF THE SIX-BAY QUADGUARD CZ IS 20'-9" (6.33 METERS). INSTALLATION SHALL BE AT THE LOCATIONS SPECIFIED IN THE PLANS, IN ACCORDANCE WITH THE MANUFACTURER'S SPECIFICATIONS AS DETAILED ON THE FOLLOWING PRE-APPROVED SHOP DRAWINGS:

DWG NO.	DRAWING NAME	DWG./REV. DATE	ODOT APPROVAL DATE
QSCZCVR-T4	QUADGUARD CZ SYSTEM FOR CONSTRUCTION ZONES	5/13/99 REV. J	8/27/99
35-40-10	QUADGUARD SYSTEM CONCRETE PAD, CZ, QG	11/19/97 REV. D	8/27/99
35-40-16	QUADGUARD SYSTEM BACKUP ASSEMBLY, CZ, QG,	7/30/99 REV. F	8/27/99
354051Z	QUADGUARD CZ SYSTEM NOSE ASSEMBLY, CZ, QG, 24, 30, 36	5/17/99	8/27/99
35-40-18	TRANSITION ASSEMBLY, 4 OFFSET, QG	6/25/99 REV. F	8/27/99
35400260	QUADGUARD SYSTEM PCMB ANCHOR ASSEMBLY	11/19/97 REV. C	8/27/99

2. THE TRACC (TRINITY ATTENUATING CRASH CUSHION) MANUFACTURED BY TRINITY INDUSTRY, 1170 N. STATE STREET, GIRARD, OHIO 44420 (TELEPHONE: 330-545-4373).

   THE TRACC IS 21'-0" (6.4 METERS) LONG AND 2'-7" (0.8 METERS) WIDE. INSTALLATION SHALL BE AT THE LOCATIONS SPECIFIED IN THE PLANS, IN ACCORDANCE WITH THE MANUFACTURER'S SPECIFICATIONS AS DETAILED ON THE FOLLOWING PRE-APPROVED SHOP DRAWINGS:

DWG NO.	DRAWING NAME	DWG./REV. DATE	ODOT APPROVAL DATE
SS450	CRASH-CUSHION ATTENUATING TERMINAL PLAN, ELEVATION & SECTIONS	3/12/99 REV. 1	8/27/99
SS455	TRACC TRANSITION TO W-BEAM MEDIAN BARRIER PLAN, ELEVATION & SECTIONS	2/18/99	8/27/99
SS461	TRACC TRANSITION TO CONCRETE SAFETY SHAPE BARRIER PLAN, ELEVATION & SECTIONS	6/30/99 REV. 1	8/27/99
SS462	TRACC TRANSITION TO CONCRETE BARRIER SINGLE SLOPE PLAN, ELEVATION & SECTIONS	6/30/99	8/27/99

3. THE BARRIER SYSTEMS, INC. TAU-II IMPACT ATTENUATOR, DISTRIBUTED BY ROAD SYSTEMS, INC., SALES SUPPORT, 2183 ELM TRACE, AUSTINTOWN, OHIO 44515 (TELEPHONE: 330-799-9291).

   THE TAU-II FOR THIS NOTE IS PARALLEL 8-BAY UNIT 24' LONG AND 35" WIDE.) INSTALLATION SHALL BE AT THE LOCATIONS SPECIFIED IN THE PLANS, IN ACCORDANCE WITH THE MANUFACTURER'S SPECIFICATIONS AS DETAILED ON THE FOLLOWING PRE-APPROVED SHOP DRAWINGS:

DWG NO.	DRAWING NAME	DWG./REV. DATE	ODOT APPROVAL DATE
A040416	UNIVERSAL TAU-II PARTS LIST	4/22/04	10/16/04
A040420	UNIVERSAL TAU-II FOUNDATION, FLUSH MOUNT BACKSTOP	4/28/04	10/16/04
A040105	UNIVERSAL TAU-II FOUNDATION, PCB BACKSTOP (REFERENCED ON A04020)	1/07/04	10/16/04
B040239	APPLICATION, FLUSH MOUNT BACKSTOP (TYPICAL FOR PARALLEL 60 MPH UNIT)	4/21/04	10/16/04

THE CONTRACTOR SHALL PROVIDE A REPLACEMENT UNIT WHEN AN IMPACT IS SEVERE ENOUGH TO REQUIRE COMPLETE REPLACEMENT OF THE ATTENUATOR. THE CONTRACTOR SHALL HAVE A SPARE PARTS PACKAGE AVAILABLE ON THE PROJECT SITE AT ALL TIMES WHEN AN ATTENUATOR IS IN PLACE. THE CONTRACTOR SHALL PROVIDE A MINIMUM OF ONE COMPLETE SPARE PARTS PACKAGE FOR EVERY ONE TO SIX UNITS INSTALLED ON THE PROJECT SITE. FOR EXAMPLE, FIVE INSTALLED UNITS REQUIRE ONE SPARE PARTS PACKAGE AND SEVEN INSTALLED UNITS REQUIRE TWO SPARE PARTS PACKAGES.

WHEN BIDIRECTIONAL DESIGNS ARE SPECIFIED, THE CONTRACTOR SHALL SUPPLY APPROPRIATE TRANSITIONS. PAYMENT FOR THE ABOVE WORK SHALL BE MADE AT THE UNIT PRICE BID AND SHALL INCLUDE ALL LABOR, TOOLS, EQUIPMENT AND MATERIALS NECESSARY TO CONSTRUCT, MAINTAIN, REPAIR, REPLACE OR RELOCATE A COMPLETE AND FUNCTIONAL IMPACT ATTENUATOR SYSTEM, INCLUDING ALL RELATED BACKUPS, TRANSITIONS, LEVELING PADS, HARDWARE AND GRADING, NOT SEPARATELY SPECIFIED, AS REQUIRED BY THE MANUFACTURER.

MAINTENANCE OF TRAFFIC - RIVERSIDE DRIVE

TRAFFIC ON RIVERSIDE DRIVE SHALL BE MAINTAINED AT ALL TIMES. TRAFFIC MAY BE REDUCED TO ONE (1) LANE BY THE USE OF FLAGGERS PER MT-97.10.

ITEM SPECIAL - STRUCTURE, MISC.: PATCHING BRIDGE DECKS WITH ASPHALT

PORTIONS OF THE EXISTING NORTHBOUND BRIDGE DECK OF STRUCTURE STA-12-1248R SHALL BE PATCHED WITH ASPHALT AS DIRECTED BY THE ENGINEER.

THE PROJECT ENGINEER/SUPERVISOR SHALL SPRAY PAINT AREAS WHICH HE OR SHE DETERMINES SHOULD BE PATCHED. THE PERIMETER OF THE PATCH SHALL BE SAW CUT APPROXIMATELY 2½" DEEP. THE LOOSE AND VISUALLY UNSOUND MATERIAL (BOTH ASPHALT AND CONCRETE) SHALL BE REMOVED WITH CHIPPING HAMMERS NOT HEAVIER THAN THE NOMINAL 35 POUND CLASS WITHOUT DISPLACING, UNDERMINING OR OTHERWISE DAMAGING THE REMAINING BRIDGE DECK. THE CHIPPING HAMMERS SHALL BE OPERATED AT AN ANGLE NOT LESS THAN 45 DEGREES WITH RESPECT TO THE DECK SURFACE. DISPOSE OF REMOVED MATERIAL ACCORDING TO 203.01. SMALL MILLING MACHINES MAY BE PERMITTED TO REMOVE LARGE PATCH AREAS AS APPROVED BY THE ENGINEER. ANY LOOSE REINFORCING STEEL SHALL BE TIED TO THE EXISTING REINFORCING STEEL MAT AS APPROVED BY THE ENGINEER.

THE PATCH AREA SHALL BE CLEANED OUT WITH COMPRESSED AIR SO ALL DEBRIS IS REMOVED. TACK ALL EXPOSED SURFACES (BOTH VERTICAL AND HORIZONTAL) WITH ITEM 407 TACK COAT AT A RATE OF 0.10 GAL./S.Y. AS APPROVED BY THE ENGINEER. THE PATCH AREA SHALL BE FILLED WITH ITEM 448 ASPHALT CONCRETE SURFACE COURSE, TYPE I, PG64-22. PLACE THE REPLACEMENT MATERIAL IN LIFTS AS APPROVED BY THE ENGINEER. THOROUGHLY AND UNIFORMLY COMPACT EACH LIFT USING SUITABLE COMPACTION EQUIPMENT AS THE ENGINEER DIRECTS IN ACCORDANCE WITH 401. FINISH THE FINAL LIFT FLUSH WITH THE EXISTING PAVEMENT SURFACE.

TRAFFIC SHALL BE MAINTAINED DURING THE PATCHING OPERATION UTILIZING MT-95.30 IN ACCORDANCE WITH THE NECESSARY LANE CLOSURE.

THE ENGINEER WILL MEASURE THE QUANTITY OF PAVEMENT REPAIR BY THE NUMBER OF SQUARE YARDS OF PAVEMENT REPAIR IN THE COMPLETE AND ACCEPTED WORK, CALCULATED USING THE DIMENSIONS ESTABLISHED BY THE ENGINEER. THE ENGINEER WILL NOT MEASURE REMOVAL AND REPLACEMENT PAVEMENT BEYOND THE DESIGNATED LIMITS.

PAYMENT FOR THE PATCHING WILL BE MADE AT THE UNIT PRICE BID PER SQUARE YARD AND WILL INCLUDE ALL MATERIALS, LABOR, EQUIPMENT AND INCIDENTALS TO SAW CUT THE PATCHES, REMOVE UNSOUND MATERIALS, TACK AND PATCH WITH ASPHALT. THE FOLLOWING ESTIMATED QUANTITY HAS BEEN CARRIED TO THE MOT GENERAL SUMMARY, SEE SHEET 13.

STA-21-1248R 135 S.Y.

TOTAL ESTIMATED QUANTITY CARRIED TO THE MOT GENERAL SUMMARY:

ITEM SPECIAL - 530 STRUCTURE, MISC.: PATCHING BRIDGE DECKS WITH ASPHALT 135 S.Y.

CALCULATED LOB CHECKED MAH

MAINTENANCE OF TRAFFIC GENERAL NOTES

STA-21-12.48

\\AKRNB1\DATA\CIVIL\2008\8541\ROUTE\STA\25433\MOT\SHEETS\25433NN084.DGN
8/4/2007
2:18:57 PM
DTROYER

CONTRACTOR'S EQUIPMENT - OPERATION AND STORAGE

A QUALIFIED FLAGGER SHALL BE EMPLOYED WHERE THE CONTRACTOR'S EQUIPMENT MUST MERGE WITH THE TRAFFIC STREAM. THE CONTRACTOR'S EQUIPMENT SHALL BE EQUIPPED WITH AT LEAST ONE AMBER FLASHING LIGHT. PAVERS, ROLLERS AND OTHER EQUIPMENT MAY BE PARKED IN AREAS ALONG THE HIGHWAY WHEN PAVING OPERATIONS ARE SCHEDULED TO CONTINUE WITHIN THE NEXT WORKDAY. OTHERWISE THE EQUIPMENT SHALL BE STORED AT A STORAGE AREA OUTSIDE THE R/W, THE LOCATION OF WHICH SHALL HAVE PRIOR APPROVAL OF THE ENGINEER. WHEN PARKING ALONG THE HIGHWAY THE EQUIPMENT SHALL BE PLACED AND DELINEATED AS PER 614.03A. NO EQUIPMENT SHALL BE PARKED IN THE MEDIAN OF THE HIGHWAY. ADEQUATE BARRICADES AND LIGHTS SHALL BE PLACED ON THE PAVEMENT SIDE OF THE EQUIPMENT TO IDENTIFY THE LIMITS OF THE EQUIPMENT. ALL OTHER EQUIPMENT, INCLUDING PRIVATE VEHICLES, SHALL BE STORED AT THE APPROVED CONTRACTOR'S STORAGE AREA. NO EQUIPMENT SHALL BE PARKED ON PRIVATE PROPERTY UNLESS PRIOR APPROVAL OF THE OWNER AND THE PROJECT ENGINEER/SUPERVISOR HAS BEEN GRANTED.

ITEM 622 - PORTABLE CONCRETE BARRIER, 50" AS PER PLAN

THIS WORK SHALL CONSIST OR FURNISHING, MAINTAINING, AND SUBSEQUENTLY REMOVING NCHRP COMPLIANT 50-INCH PORTABLE CONCRETE BARRIER AT THE LOCATIONS SHOWN ON THE PLANS.

ALL EXISTING BARRIER REFLECTORS, LINEAR DELINEATION, AND OBJECT MARKERS ON THE PORTABLE CONCRETE BARRIER SHALL BE REMOVED PRIOR TO PLACEMENT OF NEW BARRIER REFLECTORS, LINEAR DELINEATION, AND OBJECT MARKERS ON THE PORTABLE CONCRETE BARRIER.

PAYMENT SHALL INCLUDE ALL LABOR, MATERIAL AND EQUIPMENT NECESSARY TO PERFORM THE WORK AND SHALL BE PAID FOR AT THE CONTRACT PRICE PER FOOT FOR ITEM 622 - PORTABLE CONCRETE BARRIER, 50-INCH, AS PER PLAN.

MAINTENANCE OF CANOE AND TOWPATH TRAFFIC

CANOE AND TOWPATH TRAFFIC SHALL BE MAINTAINED THROUGHOUT CONSTRUCTION OF THE PROJECT BY THE CONTINUING USE OF THE TUSCARAWAS RIVER CHANNEL AND THE CONGRESSMAN RALPH REGULA TOWPATH TRAIL (OR A TOWPATH TRAIL DETOUR APPROVED BY THE ENGINEER). HOWEVER, THE RIVER CHANNEL AND THE TOWPATH TRAIL MAY BE CLOSED, AND THE TOWPATH TRAFFIC DETOURED, FOR LIMITED DURATION PERIODS IN ORDER TO PERMIT ACTIVE CONSTRUCTION ACTIVITIES OVER THE RIVER AND THE TRAIL. THE PERMITTED CLOSURE PERIODS ARE AS FOLLOWED:

NUMBER OF CLOSURE PERIODS - 14
DURATION OF CLOSURES - 3-5 DAYS
CLOSURE TIMING - 7:00AM TO 6:00 PM, MONDAY THROUGH FRIDAY

ADEQUATE RIVER SIGNING BOTH UPSTREAM AND DOWNSTREAM SHALL BE INSTALLED AND MAINTAINED BY THE CONTRACTOR. THE FOLLOWING TYPE SIGNS ARE CONSIDERED TO BE MINIMUM TREATMENT.

1. APPROXIMATELY ONE-QUARTER MILE UPSTREAM, ADVANCED WARNING TYPE SIGNS ON BOTH BANKS.
2. APPROXIMATELY 300 FEET UPSTREAM, SIGNS SPECIFYING ACTIONS REQUIRED OF CANOEIST ON BOTH BANKS.
3. APPROXIMATELY ONE-QUARTER MILE DOWNSTREAM, ADVANCE WARNING TYPE SIGNS ON BOTH BANKS.
4. APPROXIMATELY 300 FEET DOWNSTREAM, SIGNS SPECIFYING ACTIONS REQUIRED OF CANOEIST ON BOTH BANKS.

THE ABOVE SIGNING SHALL BE MOUNTED IN SUCH A WAY AS TO BE A MINIMUM OF 4 FEET ABOVE THE WATER LEVEL, UNOBSTRUCTED BY TREE BRANCHES, AND PROPERLY ANGLED FOR MAXIMUM VISIBILITY FROM THE MAIN CLEAR CHANNEL. THE METHOD OF SUPPORTING THE SIGNS SHALL BE APPROVED BY THE ENGINEER PRIOR TO INSTALLATION. UPON COMPLETION OF THE PROJECT, THE SIGNS AND SUPPORT SYSTEMS SHALL BE COMPLETELY REMOVED FROM THE RIVER CHANNEL. THE CONTRACTOR SHALL NOTIFY LOCAL CANOE LIVERIES USING THIS PORTION OF THE RIVER AT LEAST 10 DAYS PRIOR TO ANY CHANGES AFFECTING CANOE TRAFFIC.

IN THE EVENT PIPES ARE USED TO DIVERT OR CARRY RIVER WATER, BOTH THE INLET AND OUTLET ENDS SHALL BE ADEQUATELY PROTECTED BY GRATES OR FENCE SO THAT PEOPLE OR CANOES ARE NOT DRAWN THROUGH OR HELD BY THEM.

ADVANCED WARNING SIGNAGE SHALL BE ERECTED ALONG THE CONGRESSMAN RALPH REGULA TOWPATH TRAIL, WARNING TRAIL USERS OF THE CONSTRUCTION AREA AHEAD. ALL WARNING SIGNS SHALL BE DUAL MOUNTED ON BOTH SIDES OF THE BIKE PATH FACING ONCOMING TRAFFIC, ON BOTH APPROACHES TO THE PROJECT LIMITS. THE FOLLOWING SIGN INSTALLATIONS ARE CONSIDERED TO BE THE MINIMUM ACCEPTABLE TREATMENT.

1. APPROXIMATELY 1500 FEET PRIOR TO THE PROJECT LIMITS, THE CONTRACTOR SHALL ERECT W20-1-30 "ROAD WORK AHEAD" SIGNS.
2. APPROXIMATELY 500 FEET PRIOR TO THE WORK AREA, THE CONTRACTOR SHALL ERECT W5-4A-18 "BIKEWAY NARROWS" SIGNS.
3. APPROXIMATELY 500 FEET AFTER PASSING THROUGH THE PROJECT, THE CONTRACTOR SHALL ERRECT G20-2-48 "END ROAD WORK" SIGNS.

THE ABOVE LISTED SIGNS SHALL BE MOUNTED TO ALLOW CLEAR UNOBSTRUCTED VIEW BY ONCOMING TRAIL USERS WITH THE METHOD OF SUPPORT AND INSTALLATION LOCATION APPROVED BY THE ENGINEER. UPON COMPLETION OF THE PROJECT, THE SIGNS AND SUPPORTS SHALL BE COMPLETELY REMOVED FROM THE TRAIL RIGHT OF WAY.

MAINTENANCE OF CANOE AND TOWPATH TRAFFIC (CONT.)

THE CONTRACTOR SHALL ALSO INSTALL SAFETY FENCING ALONG THE TRAIL RIGHT OF WAY TO PREVENT TRAIL USERS FROM LEAVING THE TRAIL SURFACE AND ENTERING THE CONSTRUCTION AREA. THE FENCING MATERIAL UTILIZED SHALL BE OF A CONSTRUCTION, WHICH WILL MINIMIZE INJURY TO TRAIL USERS. SELECTION OF FENCING TYPE SHALL BE APPROVED BY THE ENGINEER PRIOR TO INSTALLATION. THE CONTRACTOR SHALL LAYOUT THE PROPOSED FENCE LOCATION IN THE FIELD FOR APPROVAL BY THE ENGINEER PRIOR TO INSTALLATION.

ALL COSTS ASSOCIATED WITH MAINTAINING CANOE AND BIKE PATH TRAFFIC SHALL BE INCLUDED IN THE LUMP SUM BID PRICE FOR ITEM 614 - MAINTAINING TRAFFIC, MISC.: MAINTENANCE OF CANOE AND BIKE PATH TRAFFIC.

ITEM 614 - WORK ZONE RAISED PAVEMENT MARKER, AS PER PLAN

WORK ZONE RAISED PAVEMENT MARKERS (WZRPMS), AS PER PLAN, AND THEIR INSTALLATION SHALL CONFORM TO CMS 614 OR CMS 621 AS SPECIFIED HEREIN.

RAISED PAVEMENT MARKERS IN USE DURING THE SNOW-PLOWING SEASON SHALL CONFORM TO 621.

RAISED PAVEMENT MARKERS IN USE DURING NON-SNOW-PLOW SEASON SHALL CONFORM TO EITHER 614 OR TO 621.

THE SNOW-PLOWING SEASON SHALL RUN FROM OCTOBER 15 THROUGH APRIL 1.

IF PROJECT DELAYS, NOT THE FAULT OF ODOT, CAUSE THE WORK TO EXTEND INTO THE SNOW-PLOWING SEASON, THE CONTRACTOR SHALL BE RESPONSIBLE FOR REPLACING WORK ZONE RAISED PAVEMENT MARKERS (WZRPMS) CONFORMING TO CMS 614, WITH RAISED PAVEMENTMARKERS CONFORMING TO 621, AS DETERMINED BY THE ENGINEER, AT THE CONTRACTOR'S EXPENSE.

THIS ITEM SHALL INCLUDE PURCHASE, INSTALLATION AND REMOVAL OF ITEM 614 WORK ZONE RAISED PAVEMENT MARKERS, AS PER PLAN, INCLUDING FILLING OF ANY DEPRESSIONS CREATED IN THE PAVEMENT AS PER CMS 202.10.

AN ESTIMATED QUANTITY OF ITEM 614 WORK ZONE RAISED PAVEMENT MARKER, AS PER PLAN HAS BEEN CALCULATED AND INCLUDED IN THE MAINTENANCE OF TRAFFIC SUBSUMMARY SHEETS AND CARRIED TO THE GENERAL SUMMARY.

WORK ZONE RAISED PAVEMENT MARKERS ON CONCRETE SURFACES

RAISED PAVEMENT MARKERS IN WORK ZONES, INSTALLED ON TO CONCRETE SURFACES, SHALL BE ITEM 614 WORK ZONE RAISED PAVEMENT MARKERS (WZRPMS). WZRPMS ARE INTENDED FOR USE ONLY DURING THE NON-SNOW-PLOWING SEASON. WZRPMS SHALL NOT BE PROVIDED DURING THE SNOW-PLOWING SEASON.

THE SNOW-PLOWING SEASON SHALL RUN FROM OCTOBER 15 THROUGH APRIL 1.

WHERE A TEMPORARY ALIGNMENT WILL REMAIN IN USE THROUGH THE WINTER, THE WZRPMS SHALL BE REMOVED PRIOR TO THE BEGINNING OF THE SNOW-PLOWING SEASON AND REPLACED APPROXIMATELY APRIL 1, OR AS OTHERWISE DETERMINED BY THE ENGINEER.

THIS ITEM SHALL INCLUDE PURCHASE, INSTALLATION AND REMOVAL OF ITEM 614 WORK ZONE RAISED PAVEMENT MARKERS.

AN ESTIMATED QUANTITY OF ITEM 614 WORK ZONE RAISED PAVEMENT MARKER HAS BEEN CALCULATED AND INCLUDED IN THE MAINTENANCE OF TRAFFIC SUBSUMMARY SHEETS AND CARRIED TO THE GENERAL SUMMARY.

ITEM SPECIAL - LINEAR DELINEATION

3M SCOTCHLITE LINEAR DELINEATION SYSTEM (LDS) SHALL BE INSTALLED ON ALL CONCRETE BARRIER, PERMANENT OR TEMPORARY, LOCATED WITHIN 5 FEET OF THE EDGE OF THE TRAVEL LANE UNDER EITHER OF THE FOLLOWING CONDITIONS:

ALONG TAPERS AND TRANSITION AREAS

ALONG CURVES WITH DEGREE OF CURVATURE GREATER THAN OR EQUAL TO 3 DEGREES

THE LDS SHALL CONSISTS OF PANELS OF DELINEATION, APPROXIMATELY 34 INCHES LONG AND 6 INCHES WIDE. PANELS SHALL BE PROVIDED AT THE RATE OF ONE PER SECTION OF PORTABLE CONCRETE BARRIER OR ONE PANEL EVERY 10 FEET, SPACED ALONG THE LENGTH OF THE RUN. THE PANELS SHALL BE MOUNTED SUCH THAT THE TOPS OF THE PANELS ARE 26 INCHES FROM THE BASE OF THE CONCRETE BARRIER

PAYMENT SHALL BE FULL COMPENSATION FOR ALL MATERIAL, LABOR, INCIDENTALS AND EQUIPMENT NECESSARY FOR FURNISHING, INSTALLING, MAINTAINING AND REMOVING 3M SCOTCHLITE LINEAR DELINEATION SYSTEM (LDS).

QUANTITIES OF ITEM SPECIAL - LINEAR DELINEATION HAVE BEEN CALCULATED AND INCLUDED IN THE MAINTENANCE OF TRAFFIC SUBSUMMARY SHEETS AND CARRIED TO THE GENERAL SUMMARY. ALONG RUNS OF CONCRETE BARRIER WHERE THIS ITEM IS PROVIDED, THE QUANTITY SHALL BE MEASURED AS THE ENTIRE LENGTH OF THE RUN BEING DELINEATED, INCLUDING THE SPACES BETWEEN THE INDIVIDUAL PANELS.

CONCRETE BARRIER DELINEATION

OBJECT MARKERS SHALL BE INSTALLED ON ALL CONCRETE BARRIER, PERMANENT AND/OR TEMPORARY, 32 INCHES OR LESS IN HEIGHT, LOCATED WITHIN 5 FEET OF THE EDGE OF THE ADJACENT TRAVEL LANE. OBJECT MARKER SPACING SHALL BE 50 FEET.

PAYMENT SHALL BE FULL COMPENSATION FOR ALL MATERIAL, LABOR, INCIDENTALS AND EQUIPMENT NECESSARY FOR FURNISHING, INSTALLING, MAINTAINING AND REMOVING OBJECT MARKERS.

QUANTITIES OF ITEM 614 - OBJECT MARKER, ONE-WAY HAVE BEEN CALCULATED AND INCLUDED IN THE MAINTENANCE OF TRAFFIC SUBSUMMARY SHEETS AND CARRIED TO THE GENERAL SUMMARY.

GUARDRAIL DELINEATION

OBJECT MARKERS SHALL BE INSTALLED ON ALL GUARDRAIL LOCATED WITHIN 5 FEET OF THE EDGE OF THE ADJACENT TRAVEL LANE. GUARDRAIL-MOUNTING OF OBJECT MARKERS SHALL BE MADE BY INSTALLING THE OBJECT MARKERS ON THE EXTENSION BLOCKS RATHER THAN DIRECTLY ONTO THE GUARDRAIL ITSELF. OBJECT MARKER SPACING SHALL BE APPROXIMATELY 50 FEET.

PAYMENT SHALL BE FULL COMPENSATION FOR ALL MATERIAL, LABOR, INCIDENTALS AND EQUIPMENT NECESSARY FOR FURNISHING, INSTALLING, MAINTAINING AND REMOVING OBJECT MARKERS.

QUANTITIES OF ITEM 614 - OBJECT MARKER, ONE-WAY HAVE BEEN CALCULATED AND INCLUDED IN THE MAINTENANCE OF TRAFFIC SUBSUMMARY SHEETS AND CARRIED TO THE GENERAL SUMMARY.

COVERING OF SIGNS

WHERE THE PLANS CALL FOR A PERMANENT SIGN TO BE OVERLAYED, THE CONTRACTOR SHALL DO SO IN SUCH A MANNER AS TO AVOID DAMAGING THE PERMANENT SIGN WHEN THE OVERLAY IS REMOVED. THE OVERLAY SHALL BE TOTALLY OPAQUE. THE USE OF ADHESIVE TAPE APPLIED DIRECTLY TO SIGN FACE IS STRICTLY PROHIBITED. THE OVERLAYS MAY BE RIVETED TO THE PERMANENT SIGN. THE CONTRACTOR SHALL PROVIDE ALL OF THE PLAQUES, SIGNS AND SIGN PANELS NECESSARY.

CALCULATED LOB
CHECKED MAH

MAINTENANCE OF TRAFFIC GENERAL NOTES

STA-21-12.48

\\AKRNB1\DATA\CIVIL\2004054\600\STA\254300\NOT\SHEETS\254300N0005.DGN
8/9/2007
2:19:28 PM
DTROYER

CONSTRUCTION EQUIPMENT RESTRICTIONS

SHOULD IT BE NECESSARY FOR THE CONTRACTOR TO CREATE HAUL ROADS (CONTRACTOR ACCESS) FOR EQUIPMENT THAT CROSS EXISTING LOCAL ROADS, OR THE TOWPATH TRAIL AT-GRADE, THE CONTRACTOR SHALL FURNISH FLAGGERS AT EACH SUCH CROSSING TO ASSURE THE SAFETY OF THE TRAVELING PUBLIC. THE FLAGGERS SHALL BE PRESENT DURING SUCH TIME THAT THE HAUL ROAD IS BEING USED. SEE THIS SHEET FOR DETAIL OF TYPICAL EQUIPMENT CROSSING. FOR ADDITIONAL DETAILS SEE STD MT-97.10.

NO OFF ROAD EQUIPMENT SHALL BE PERMITTED TO CROSS OPEN LANES ON S.R. 21.

SIGN LOCATIONS MAY BE ADJUSTED TO FIT EXISTING CONDITIONS AS APPROVED BY THE ENGINEER.

ALL WORK AND TRAFFIC CONTROL DEVICES SHALL BE IN ACCORDANCE WITH 614 AND OTHER APPLICABLE PORTIONS OF THE SPECIFICATIONS AS WELL AS THE OHIO MANUAL OF UNIFORM TRAFFIC CONTROL DEVICES. PAYMENT FOR ALL LABOR, EQUIPMENT AND MATERIALS SHALL BE INCLUDED IN THE LUMP SUM CONTRACT PRICE FOR ITEM 614 - MAINTAINING TRAFFIC, MISC.: MAINTENANCE OF CANOE AND BIKE PATH TRAFFIC.

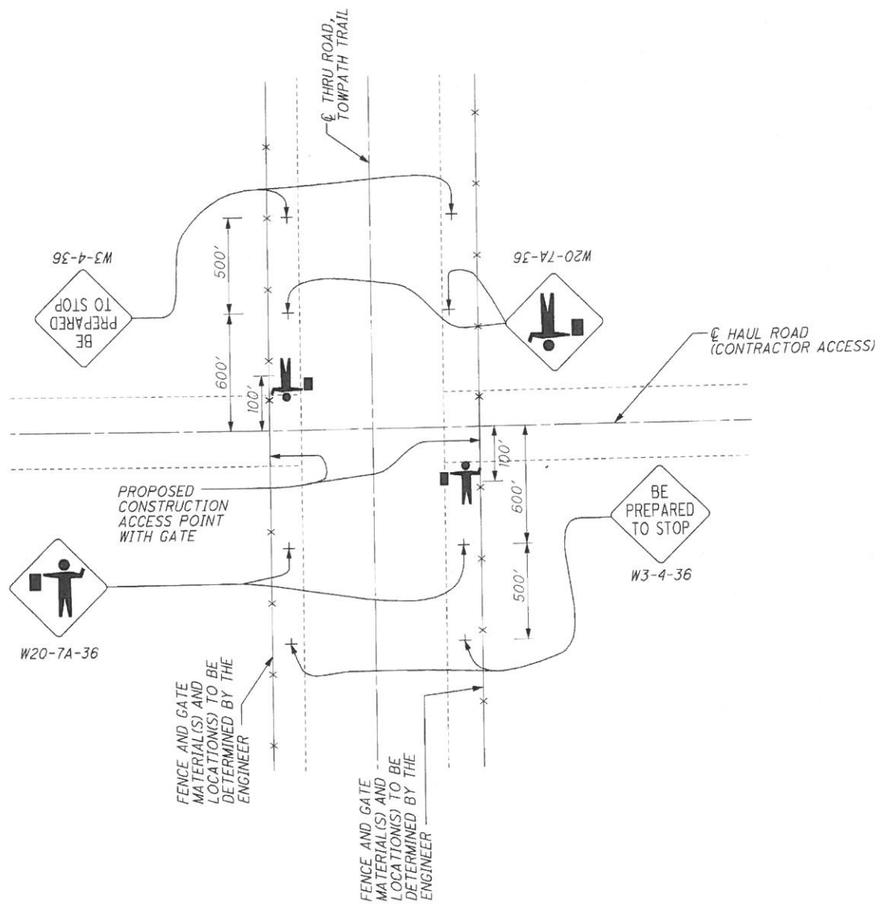

FLAGGER OPERATION DETAIL FOR CROSSING OF CONSTRUCTION EQUIPMENT

SEE RESTRICTIONS UNDER GENERAL REQUIREMENTS NOTE ON THIS SHEET

SIGN LOCATIONS TO BE COORDINATED WITH THOSE LISTED IN THE MAINTENANCE OF CANOE AND TOWPATH TRAFFIC NOTE.

FLAGGER OPERATIONS DETAIL
NOT TO SCALE

CALCULATED LOB
CHECKED MAH

MAINTENANCE OF TRAFFIC GENERAL NOTES

STA-21-12.48

\\AKRN01\DATA\CIVIL\2004054\00\STA\25433\MOT\SHEETS\25433MN013.DGN
8/9/2007
2:19:48 PM
DTROYER

ITEM	SHEET NUMBERS 7	8	9	10	14	15	16	17	6	ITEM	ITEM EXT.	TOTAL QUANT.	UNIT	DESCRIPTION	SHEET NUMBER
411								85	50	411	10000	135	CU YD	STABILIZED CRUSHED AGGREGATE	
530				135						530	00800	135	SQ YD	STRUCTURE, MISC.: PATCHING BRIDGE DECKS WITH ASPHALT	10
614	32									614	11100	32	HOUR	LAW ENFORCEMENT OFFICER WITH PATROL CAR	
614					1					614	12336	1	EACH	WORK ZONE IMPACT ATTENUATOR (UNIDIRECTIONAL)	
614			4							614	12484	4	EACH	WORK ZONE INCREASED PENALTIES SIGN	
614			2							614	12756	2	EACH	WORK ZONE CROSSOVER LIGHTING SYSTEM	
614					20		10			614	12800	30	EACH	WORK ZONE RAISED PAVEMENT MARKER	
614					170	104	116	106		614	12801	496	EACH	WORK ZONE RAISED PAVEMENT MARKER, AS PER PLAN	11
614					61	20	48	30		614	13300	159	EACH	BARRIER REFLECTOR, TYPE B	
614					36	2	37			614	13350	75	EACH	OBJECT MARKER, ONE WAY	
614					34	10	29	19		614	13360	92	EACH	OBJECT MARKER, TWO WAY	
614										614	18002	LUMP		MAINTAINING TRAFFIC, MISC: MAINTENANCE OF CANOE AND BIKE PATH TRAFFIC	11
614					1.51	0.97	0.65	0.94		614	22100	4.07	MILE	WORK ZONE EDGE LINE, CLASS 1, 642 PAINT	
614							0.67			614	22200	0.67	MILE	WORK ZONE EDGE LINE, CLASS 1, 740.06, TYPE 1	
614					2					614	30200	2	EACH	WORK ZONE LANE ARROW, CLASS 1, 642 PAINT	
SPECIAL					410		567	290		SPECIAL	61413170	1267	FT	LINEAR DELINEATION	11
615										615	10000	LUMP		ROADS FOR MAINTAINING TRAFFIC	
615								2819		615	20001	2819	SQ YD	PAVEMENT FOR MAINTAINING TRAFFIC, CLASS A, AS PER PLAN	8
616		10								616	10000	10	M GAL	WATER	
616		1								616	20000	1	TON	CALCIUM CHLORIDE	
622					1670	480	1420	860		622	40031	4430	FT	PORTABLE CONCRETE BARRIER, 50", AS PER PLAN	11
630					20					630	80300	20	SQ FT	SIGN, TEMPORARY OVERLAY	
630							2			630	89894	2	EACH	REMOVAL OF TEMPORARY OVERLAY SIGN AND DISPOSAL	

CALCULATED LOB
CHECKED MAH

MAINTENANCE OF TRAFFIC GENERAL SUMMARY

STA-21-12.48

\\AKRN01\DATA\CIVIL\2004054\00\STA\25433\MOT\SHEETS\25433MG001.DGN
8/24/2007
7:54:32 AM
DTROYER

SHEET NO.	REFERENCE NO.	LOCATION	STATION FROM	STATION TO	SIDE	411 STABILIZED CRUSHED AGGREGATE	614 WORK ZONE IMPACT ATTENUATOR (UNIDIRECTIONAL)	614 WORK ZONE RAISED PAVEMENT MARKER	614 WORK ZONE RAISED PAVEMENT MARKER, AS PER PLAN	614 SPECIAL - LINEAR DELINEATION	614 BARRIER REFLECTOR, TYPE B	614 OBJECT MARKER, ONE WAY	614 OBJECT MARKER, TWO WAY	614 WORK ZONE EDGE LINE, CLASS 1, 642 PAINT (WHITE)	614 WORK ZONE EDGE LINE, CLASS 1, 642 PAINT (YELLOW)	614 WORK ZONE EDGE LINE, CLASS 1, 740.06, TYPE 1 (WHITE)	614 WORK ZONE EDGE LINE, CLASS 1, 740.06, TYPE 1 (YELLOW)	614 WORK ZONE LANE ARROW, CLASS 1, 642 PAINT	615 PAVEMENT FOR MAINTAINING TRAFFIC, CLASS A, AS PER PLAN	622 PORTABLE CONCRETE BARRIER, 50", AS PER PLAN	630 SIGN, TEMPORARY OVERLAY	630 REMOVAL OF TEMPORARY OVERLAY SIGN AND DISPOSAL
						CU YD	EACH	EACH	EACH	FT	EACH	EACH	EACH	FT	FT	FT	FT	EACH	SQ YD	FT	SQ FT	EACH
25	W-1	S.R. 21 NB	635+85	642+00	RT.									615.00								
26	W-2	S.R. 21 NB	642+00	643+95	RT.									195.00								
26	LA-1	S.R. 21 NB	644+49		RT.													1				
26	LA-2	S.R. 21 NB	645+93		RT.													1				
26	W-3	S.R. 21 NB	647+12	654+50	RT.									757.00								
26	Y-1	S.R. 21 NB	647+50	654+50	RT.										700.00							
26		S.R. 21 NB	650+30	651+70	RT.						4											
26		S.R. 21 NB	651+70	654+50	RT.					280.00												
26		S.R. 21 NB	652+80	654+50	RT.						4											
26	MS-1	S.R. 21 NB	643+84																		10	
26	MS-2	S.R. 21 NB	645+15																		10	
26		S.R. 21 NB	647+50	654+50	RT.				70													
26	PCB-1	S.R. 21	650+30	654+50	RT.															420.00		
26		S.R. 21	650+30		RT.		1															
26		S.R. 21	650+30	654+50									9									
26	W-4	S.R. 21 SB	650+75	654+50	LT. & RT.									375.00								
26	Y-2	S.R. 21 SB	651+31	654+50	LT. & RT.										319.00							
26		S.R. 21 SB	650+75	654+50	LT. & RT.				38													
26		S.R. 21 SB	650+30	654+50	LT. & RT.						9											
27	W-5	S.R. 21 NB	654+50	667+00	RT.									1250.00								
27	Y-3	S.R. 21 NB	654+50	667+00	RT.										1250.00							
27		S.R. 21 NB	654+50	655+80	RT.				14													
27		S.R. 21 NB	654+50	655+80	RT.					130.00												
27		S.R. 21 NB	655+80	667+00	RT.						23											
27		S.R. 21 NB	658+30	659+20	RT.							2										
27		S.R. 21 NB	659+20	666+40	RT.							15										
27		S.R. 21 NB	666+40	667+00	RT.							2										
27	PCB-2	S.R. 21	654+50	667+00	RT.															1250.00		
27		S.R. 21	654+50	667+00	RT.								25									
27		S.R. 21 SB	654+50	658+60	RT.				42													
27		S.R. 21 SB	658+60	659+00	RT.			4														
27		S.R. 21 SB	654+50	667+00	RT.						25											
27	Y-4	S.R. 21 SB	654+50	667+00	RT.										1250.00							
27	W-6	S.R. 21 SB	654+50	667+00	RT.									1250.00								
27		S.R. 21 SB	658+20	658+80	RT.							2										
27		S.R. 21 SB	658+80	666+00	RT.							15										
27		S.R. 21 SB	665+00	666+40	RT.			16														
27		S.R. 21 SB	666+40	667+00	RT.				6													
TOTALS CARRIED TO M.O.T. GENERAL SUMMARY							1	20	170	410	65	36	34	4442.00	3519.00			2		1670	20	
MILE														1.51								

MAINTENANCE OF TRAFFIC SUBSUMMARY - PHASE 2
SHEET 1 OF 2

CALCULATED LOB
CHECKED MAH

STA-21-12.48

14
124

\\WKRN01\DATA\CIVIL\2004054\MAP\STA\25433\MOT\SHEETS\25433MS001.DGN
2/6/2007
4:28:26 PM
SCOX

SHEET NO.	REFERENCE NO.	LOCATION	STATION FROM	STATION TO	SIDE	411 STABILIZED CRUSHED AGGREGATE (CU YD)	614 WORK ZONE IMPACT ATTENUATOR (UNIDIRECTIONAL) (EACH)	614 WORK ZONE RAISED PAVEMENT MARKER (EACH)	614 WORK ZONE RAISED PAVEMENT MARKER, AS PER PLAN (EACH)	614 SPECIAL - LINEAR DELINEATION (FT)	614 BARRIER REFLECTOR, TYPE B (EACH)	614 OBJECT MARKER, ONE WAY (EACH)	614 OBJECT MARKER, TWO WAY (EACH)	614 WORK ZONE EDGE LINE, CLASS 1, 642 PAINT (WHITE) (FT)	614 WORK ZONE EDGE LINE, CLASS 1, 642 PAINT (YELLOW) (FT)	614 WORK ZONE EDGE LINE, CLASS 1, 740.06, TYPE I (WHITE) (FT)	614 WORK ZONE EDGE LINE, CLASS 1, 740.06, TYPE I (YELLOW) (FT)	614 WORK ZONE LANE ARROW, CLASS 1, 642 PAINT (EACH)	615 PAVEMENT FOR MAINTAINING TRAFFIC, CLASS A, AS PER PLAN (SQ YD)	622 PORTABLE CONCRETE BARRIER, 50", AS PER PLAN (FT)	630 SIGN, TEMPORARY OVERLAY (SQ FT)	630 REMOVAL OF TEMPORARY OVERLAY SIGN AND DISPOSAL (EACH)
28	W-7	S.R. 21 NB	667+00	673+43	RT.									643.00								
28	Y-6	S.R. 21 NB	667+00	674+43	RT.										743.00							
28		S.R. 21 NB	667+00	667+50	RT.							2										
28		S.R. 21 NB	667+00	671+80	RT.						10											
28	PCB-3	S.R. 21	667+00	671+80	RT.																480.00	
28		S.R. 21	667+00	671+80	RT.								10									
28		S.R. 21 SB	667+00	671+80	RT.						10											
28	Y-5	S.R. 21 SB	667+00	679+50	LT. & RT.										1250.00							
28	W-8	S.R. 21 SB	667+00	673+69	LT. & RT.									669.00								
28		S.R. 21 SB	667+00	677+35					104													
29	Y-7	S.R. 21	679+50	692+00	LT.										1250.00							
30	Y-8	S.R. 21	692+00	697+41	LT.										541.00							
TOTALS CARRIED TO M.O.T. GENERAL SUMMARY									104		20	2	10	1312.00	3784.00					480.00		
MILE														0.97								

\\AKRN01\DATA\CIVIL\2024054.00\STA\25433\MOT\SHEETS\25433MS002.DGN
2/6/2027
4:28:58 PM
SCOX

CALCULATED LOB
CHECKED MAH

MAINTENANCE OF TRAFFIC SUBSUMMARY - PHASE 2
SHEET 2 OF 2

STA-21-12.48

SHEET NO.	REFERENCE NO.	LOCATION	STATION FROM	STATION TO	SIDE	411 STABILIZED CRUSHED AGGREGATE	614 WORK ZONE IMPACT ATTENUATOR (UNIDIRECTIONAL)	614 WORK ZONE RAISED PAVEMENT MARKER	614 WORK ZONE RAISED PAVEMENT MARKER, AS PER PLAN	614 SPECIAL - LINEAR DELINEATION	614 BARRIER REFLECTOR, TYPE B	614 OBJECT MARKER, ONE WAY	614 OBJECT MARKER, TWO WAY	614 WORK ZONE EDGE LINE, CLASS 1, 642 PAINT (WHITE)	614 WORK ZONE EDGE LINE, CLASS 1, 642 PAINT (YELLOW)	614 WORK ZONE EDGE LINE, CLASS 1, 740.06, TYPE 1 (WHITE)	614 WORK ZONE EDGE LINE, CLASS 1, 740.06, TYPE 1 (YELLOW)	614 WORK ZONE LANE ARROW, CLASS 1, 642 PAINT	615 PAVEMENT FOR MAINTAINING TRAFFIC, CLASS A, AS PER PLAN	622 PORTABLE CONCRETE BARRIER, 50" AS PER PLAN	630 SIGN, TEMPORARY OVERLAY	630 REMOVAL OF TEMPORARY OVERLAY SIGN AND DISPOSAL
						CU YD	EACH	EACH	EACH	FT	EACH	EACH	EACH	FT	FT	FT	FT	EACH	SQ YD	FT	SQ FT	EACH
32		S.R. 21 NB	647+95	654+50	LT. & RT.				68													
32		S.R. 21 NB	652+80	654+50	LT.						5											
32	W-9	S.R. 21 NB	647+12	654+50	LT. & RT.									761.00								
32	Y-9	S.R. 21 NB	649+37	654+50	LT. & RT.										513.00							
32	W-10	S.R. 21 SB	651+39	654+50	LT.									311.00								
32	MR-1	S.R. 21 NB	643+84																			1
32	MR-2	S.R. 21 NB	645+15																			1
32	PCB-4	S.R. 21	652+80	654+50	LT.								4							170.00		
32		S.R. 21	652+80	654+50	LT.						4				311.00							
32		S.R. 21 SB	652+80	654+50	LT.																	
32	Y-10	S.R. 21 SB	651+39	654+50	LT.																	
33		S.R. 21 NB	654+50	658+22	LT.				38													
33		S.R. 21 NB	658+22	659+00	LT.			8				15										
33		S.R. 21 NB	658+60	665+75	LT.							3										
33		S.R. 21 NB	665+75	667+00	LT.			2														
33		S.R. 21 NB	665+83	665+95	LT.				10					325.00								
33		S.R. 21 NB	665+95	667+00	LT.										325.00							
33	W-11	S.R. 21 NB	654+50	657+75	LT.											875.00						
33	Y-11	S.R. 21 NB	654+50	657+75	LT.												875.00					
33	W-12	S.R. 21 NB	657+75	666+50	LT.									50.00								
33	Y-12	S.R. 21 NB	657+75	666+50	LT.										50.00							
33	W-13	S.R. 21 NB	666+50	667+00	LT.																	
33	Y-13	S.R. 21 NB	666+50	667+00	LT.																	
		S.R. 21 NB	654+50	659+00						450.00												
33		S.R. 21 NB	659+00	665+83	LT.						14											
33		S.R. 21 NB	665+83	667+00	LT.					117.00												
33	PCB-5	S.R. 21	654+50	667+00	LT.																	
33		S.R. 21	654+50	667+00	LT.															1250.00		
33		S.R. 21 SB	654+50	667+00	LT.								25									
33	W-14	S.R. 21 SB	654+50	657+75	LT.						25											
33	Y-14	S.R. 21 SB	654+50	657+75	LT.									325.00								
33	W-15	S.R. 21 SB	657+75	666+50	LT.										325.00							
33	Y-15	S.R. 21 SB	657+75	666+50	LT.											875.00						
33	W-16	S.R. 21 SB	666+50	667+00	LT.												875.00					
33	Y-16	S.R. 21 SB	666+50	667+00	LT.									50.00								
33		S.R. 21 SB	657+25	658+25	LT.										50.00							
33		S.R. 21 SB	658+25	665+40	LT.							2										
33		S.R. 21 SB	665+40	666+40	LT.							15										
												2										
TOTALS CARRIED TO M.O.T. GENERAL SUMMARY								10	116	567	48	37	29	1822.00	1574.00	1750.00	1750.00			1420		2
MILE														0.65		0.67						

CALCULATED LOB CHECKED MAH

MAINTENANCE OF TRAFFIC SUBSUMMARY - PHASE 3
SHEET 1 OF 2

STA-21-12.48

16
124

\\AKRN01\DATA\CIVIL\2004824\02\ST&V\25433\MOT\SHEETS\25433HS0003.DGN
2/7/2007
10:28:03 AM
DTROYER

SHEET NO.	REFERENCE NO.	LOCATION	STATION FROM	STATION TO	SIDE	411 STABILIZED CRUSHED AGGREGATE	614 WORK ZONE IMPACT ATTENUATOR (UNIDIRECTIONAL)	614 WORK ZONE RAISED PAVEMENT MARKER	614 WORK ZONE RAISED PAVEMENT MARKER, AS PER PLAN	614 SPECIAL - LINEAR DELINEATION	614 BARRIER REFLECTOR, TYPE B	614 OBJECT MARKER, ONE WAY	614 OBJECT MARKER, TWO WAY	614 WORK ZONE EDGE LINE, CLASS 1, 642 PAINT (WHITE)	614 WORK ZONE EDGE LINE, CLASS 1, 642 PAINT (YELLOW)	614 WORK ZONE EDGE LINE, CLASS 1, 740.06, TYPE 1 (WHITE)	614 WORK ZONE EDGE LINE, CLASS 1, 740.06, TYPE 1 (YELLOW)	614 WORK ZONE LANE ARROW, CLASS 1, 642 PAINT	615 PAVEMENT FOR MAINTAINING TRAFFIC, CLASS A, AS PER PLAN	622 PORTABLE CONCRETE BARRIER, 50", AS PER PLAN	630 SIGN, TEMPORARY OVERLAY	630 REMOVAL OF TEMPORARY OVERLAY SIGN AND DISPOSAL
						CU YD	EACH	EACH	EACH	FT	EACH	EACH	EACH	FT	FT	FT	FT	EACH	SQ YD	FT	SQ FT	EACH
34		S.R. 21 NB	667+00	677+35	LT. & RT.				106													
34	W-17	S.R. 21 NB	667+00	677+26	LT.									1026.00								
34	Y-17	S.R. 21 NB	667+00	676+26	LT.										926.00							
		S.R. 21 NB	667+00	669+90						290												
		S.R. 21 NB	669+90	675+60							12											
34	PCB-6	S.R. 21	667+00	675+60	LT. & RT.															860.00		
34		S.R. 21	667+00	675+60	LT.								19									
34		S.R. 21 SB	667+00	671+50	LT.						18											
34	W-18	S.R. 21 SB	667+00	679+50	LT.									1250.00								
34	Y-18	S.R. 21 SB	667+00	679+50	LT.										1250.00							
35	W-19	S.R. 21	679+50	681+85	LT.									235.00								
35	Y-19	S.R. 21	679+50	681+85	LT.										235.00							
37		S.R. 21	649+30	654+00	LT. & RT.	17																
37		S.R. 21	649+30	654+00	LT. & RT.														620			
38		S.R. 21	654+00	658+64	LT. & RT.	27																
38		S.R. 21	654+00	658+64	LT. & RT.														644			
39		S.R. 21	666+24	671+00	LT. & RT.	23																
39		S.R. 21	666+24	671+00	LT. & RT.														866			
40		S.R. 21	671+00	676+26	LT. & RT.	18																
40		S.R. 21	671+00	676+26	LT. & RT.														689			
TOTALS CARRIED TO M.O.T. GENERAL SUMMARY						85			106	290	30		19	2511.00	2411.00				2819	860.00		
MILE														0.94								

CALCULATED LOB
CHECKED MAH

MAINTENANCE OF TRAFFIC SUBSUMMARY - PHASE 3
SHEET 2 OF 2

STA-21-12.48

17
124

\\AKRND1\DATA\C1V1L\2004054\00\STA\25433\M07\SHEETS\25433MS004.DGN
2/6/2007
4:36:12 PM
SCOX

G:\CIVIL\2024054\00\STA\25433\MOT\SHEETS\MPA.DGN
2/6/2007
9:15:45 AM
SVARRECCHIA

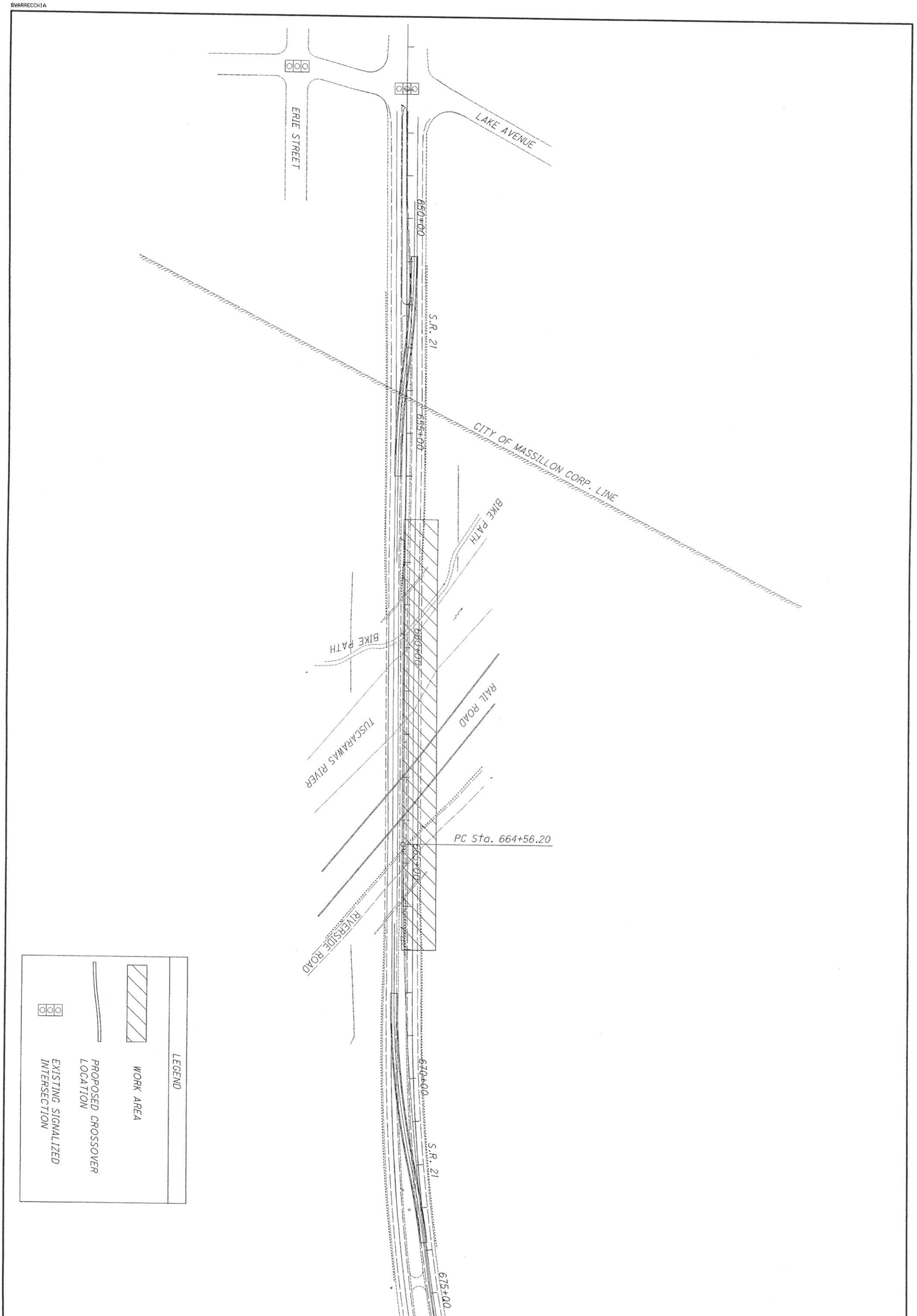

STA-21-12.48

MAINTENANCE OF TRAFFIC - CONSTRUCTION PHASE 2
SCHEMATIC PLAN

CALCULATED LOB
CHECKED MAH

0 100
50 200
HORIZONTAL SCALE IN FEET

G:\CIVIL\2004054\00\STA\25433\MOT\SHEETS\MPB.DGN
2/6/2007
9:16:13 AM
BVARRECCHIA

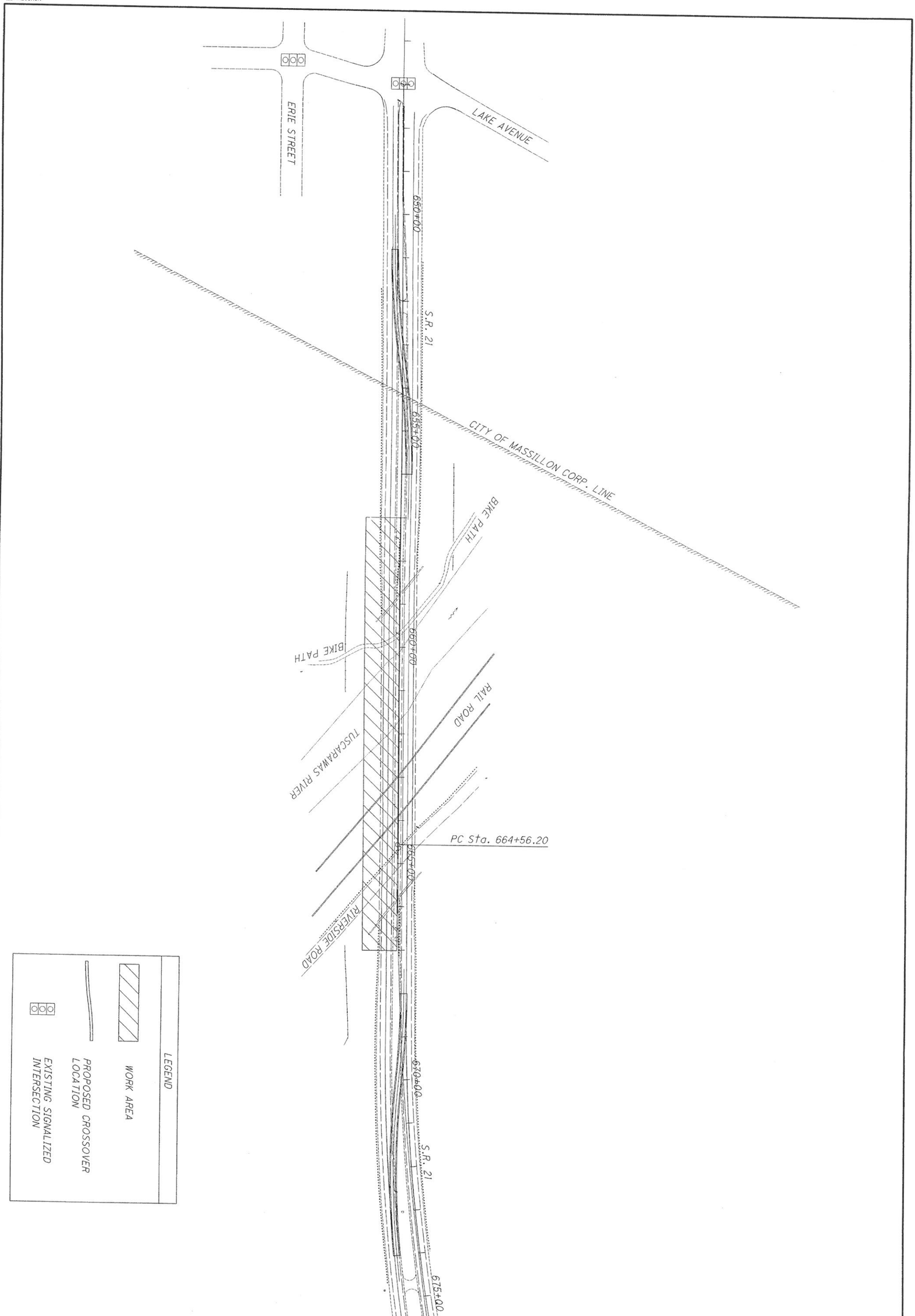

19 / 124	STA-21-12.48	MAINTENANCE OF TRAFFIC - CONSTRUCTION PHASE 3 SCHEMATIC PLAN	CALCULATED LOB CHECKED MAH	0 100 50 200 HORIZONTAL SCALE IN FEET

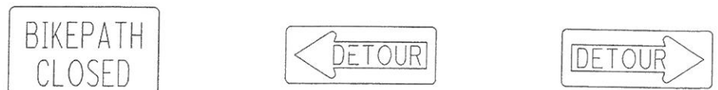

1

M4-10L-48

2

M4-10R-48

3

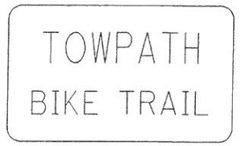

D3-H4-40

4

M4-9C-30

5

M4-9C-30

6

LEGEND

- TEMPORARY SIGN SUPPORT
- CHAIN LINK FENCE
- DETOUR DIRECTION ARROW

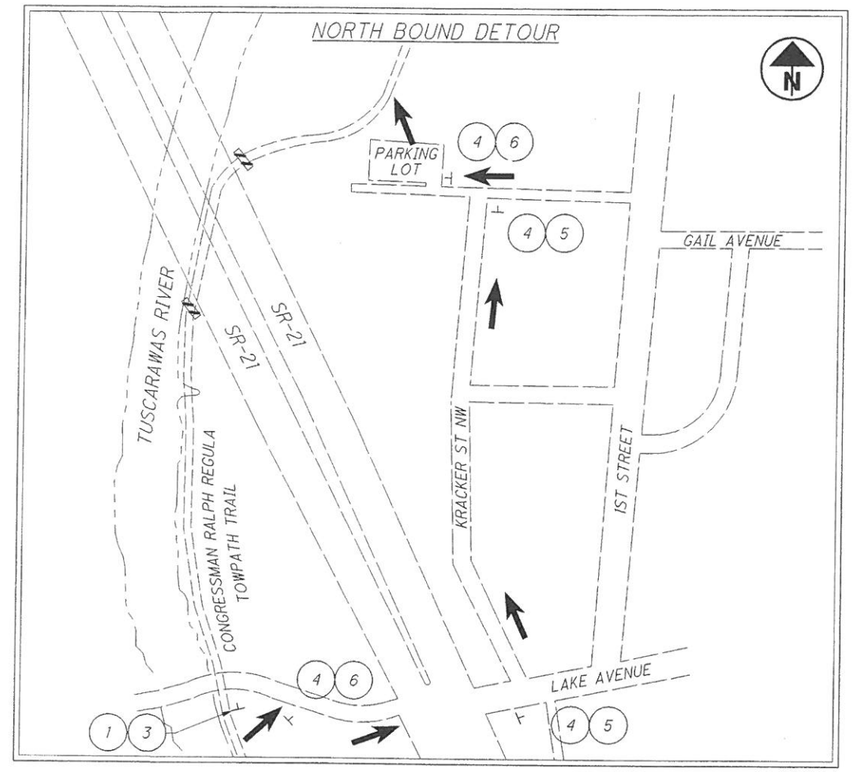

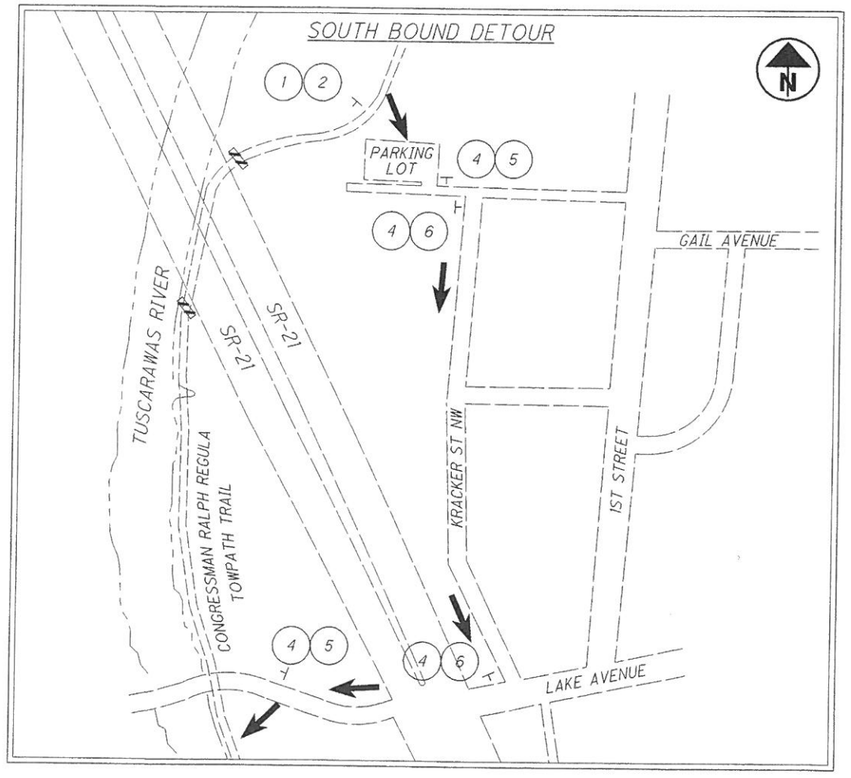

CALCULATED CLP
CHECKED RWE

BIKE TRAIL DETOUR PLAN

STA-21-12.48

D:\CIVIL\2024054\00\STA\25433\MOT\SHEETS\25433M0004.DGN
2/6/2007
9:16:49 AM
SVARRECCHIA

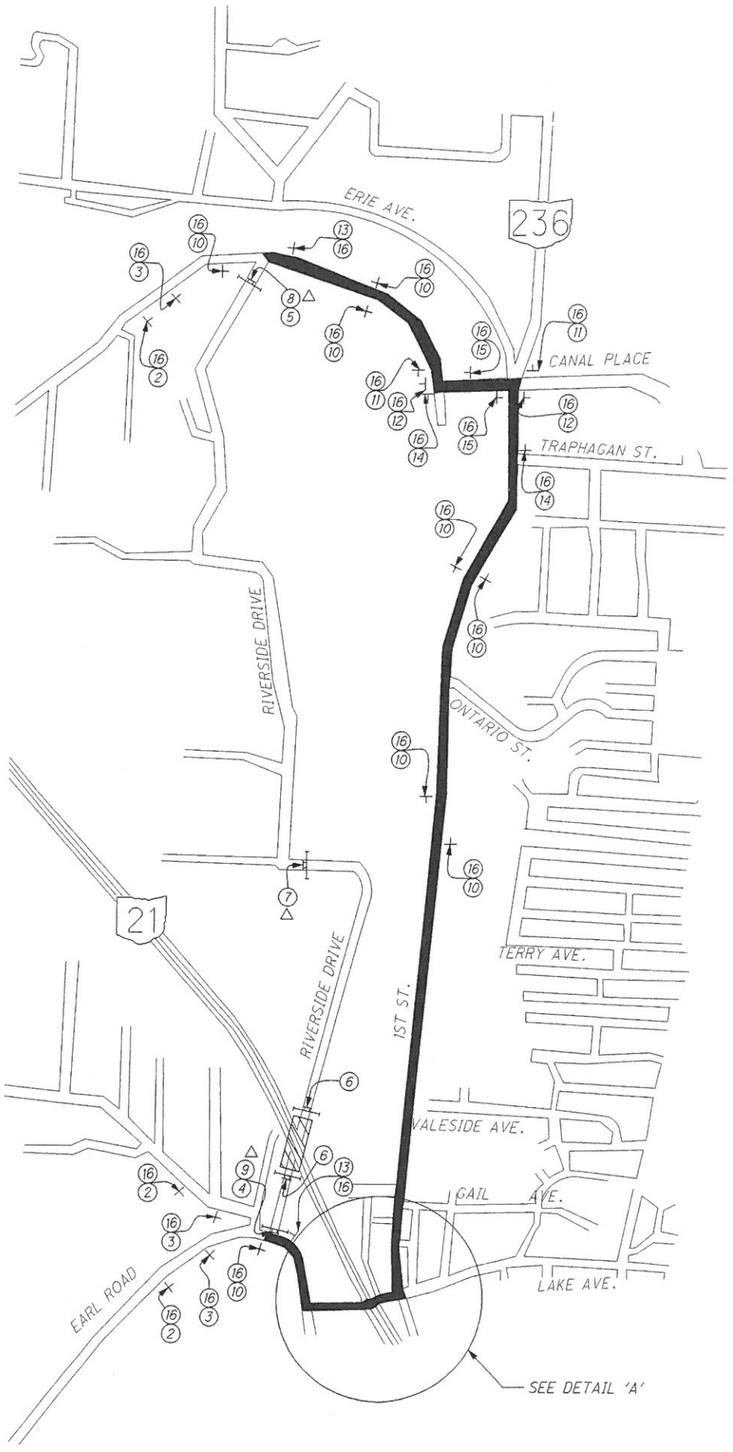

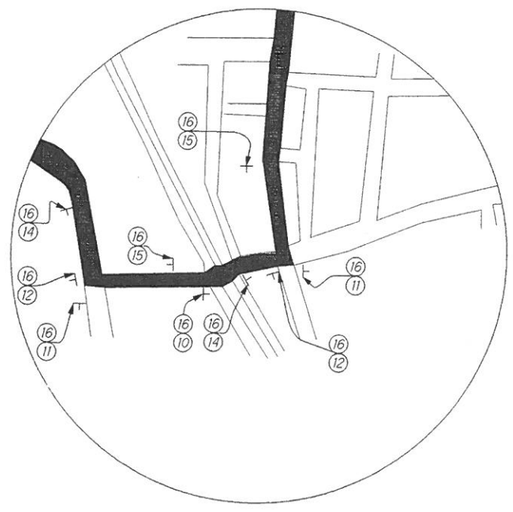

TYPE 'A' WARNING LIGHT
W20-1-36
(1)

TYPE 'A' WARNING LIGHT
W20-3-36
(2)

TYPE 'A' WARNING LIGHT
W20-2-36
(3)

M4-10R-48
(4)

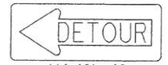

M4-10L-48
(5)

R11-2-48
MOUNTED ON
TYPE III BARRICADES
(6)

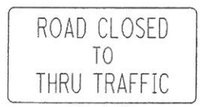

R11-4-48
MOUNTED ON
TYPE III BARRICADE
(7)

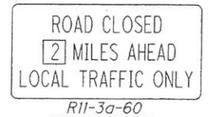

R11-3a-60
MOUNTED ON
TYPE III BARRICADE
(8)

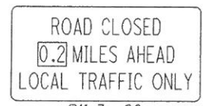

R11-3a-60
MOUNTED ON
TYPE III BARRICADE
(9)

M4-9C-30
(10)

M4-9R-30
(11)

M4-9R-30
(12)

M4-8a-24
(13)

M4-9AL-30
(14)

M4-9AR-30
(15)

D-3-48
(16)

△ TYPE III BARRIER
SET ADJACENT TO
THE STREET FACING
ONCOMING TRAFFIC

LEGEND

- SIGN
- TYPE III BARRICADE
- WORK AREA
- DETOUR ROUTE

CALCULATED LOB
CHECKED MAH

MAINTENANCE OF TRAFFIC
RIVERSIDE DRIVE DETOUR MAP

STA-21-12.48

21
124

\\AKRNT\DATA\CIVIL\2084054\80\STA2543\MOT\SHEETS\2543M0805.DGN
2/6/2007
3:19:55 PM
SWARRECCHIA

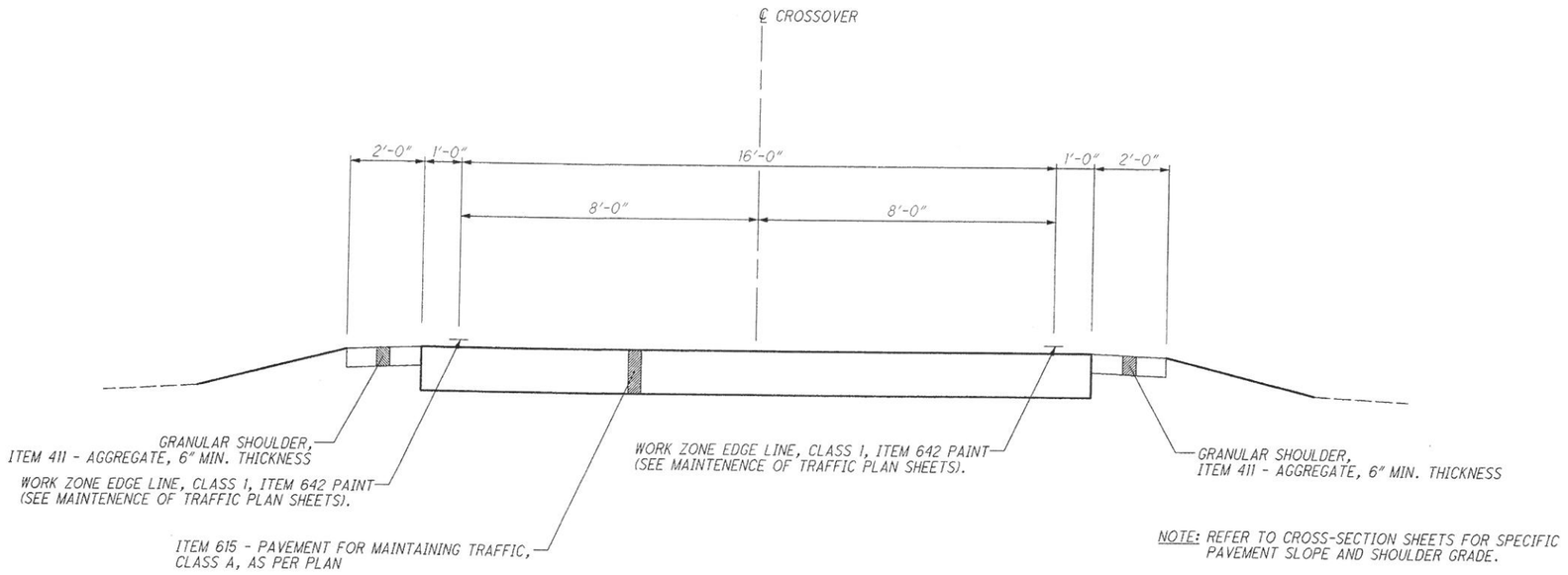

NOTE: REFER TO CROSS-SECTION SHEETS FOR SPECIFIC PAVEMENT SLOPE AND SHOULDER GRADE.

MAINTENANCE OF TRAFFIC TYPICAL SECTION - CROSSOVERS 1, 2, 3, & 4

NOT TO SCALE

MAINTENANCE OF TRAFFIC TYPICAL SECTION
CROSSOVERS

CALCULATED LOB
CHECKED MAH

STA-21-12.48

22
124

D:\CIVIL\2004054\02\STA\25433\MOT\SHEETS\25433MD003.DGN
2/6/2007
9:18:23 AM
SVARRECCHIA

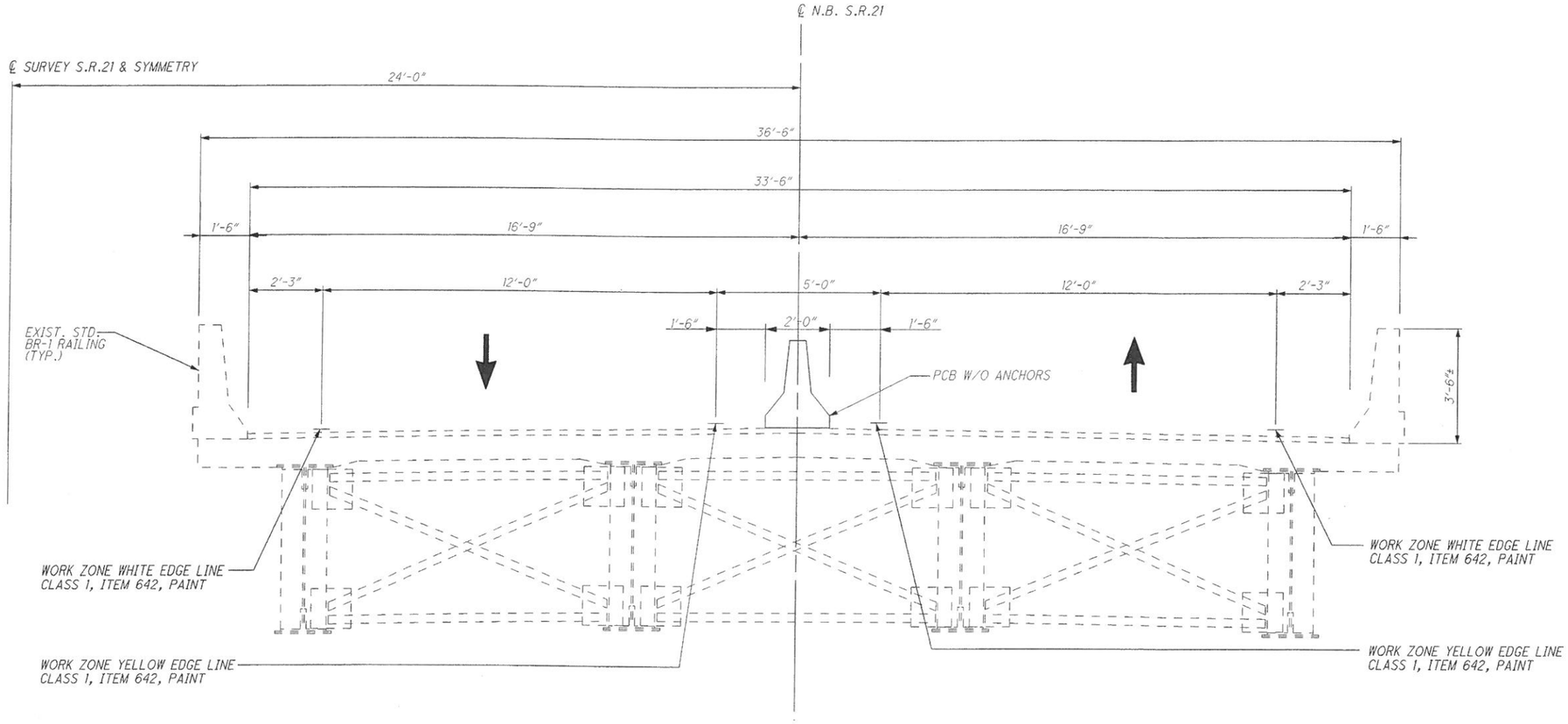

MAINTENANCE OF TRAFFIC TRANSVERSE SECTION

CONSTRUCTION PHASE 2, STA-21-1248R
S.R. 21 NORTHBOUND
N.T.S.

MAINTENANCE OF TRAFFIC TRANSVERSE SECTION - CONSTRUCTION PHASE 2
BRIDGE NO. STA-21-1238R, US 21 OVER TUSCARAWAS RIVER
PENNA. R.R., B & O R.R. AND T.R. 353

CALCULATED LOB | CHECKED MAH

STA-21-12.48

G:\CIVIL\2004054\00\STA\25433\MOT\SHEETS\25433MS001.ODN
2/6/2007
9:18:51 AM
SWARRECCHIA

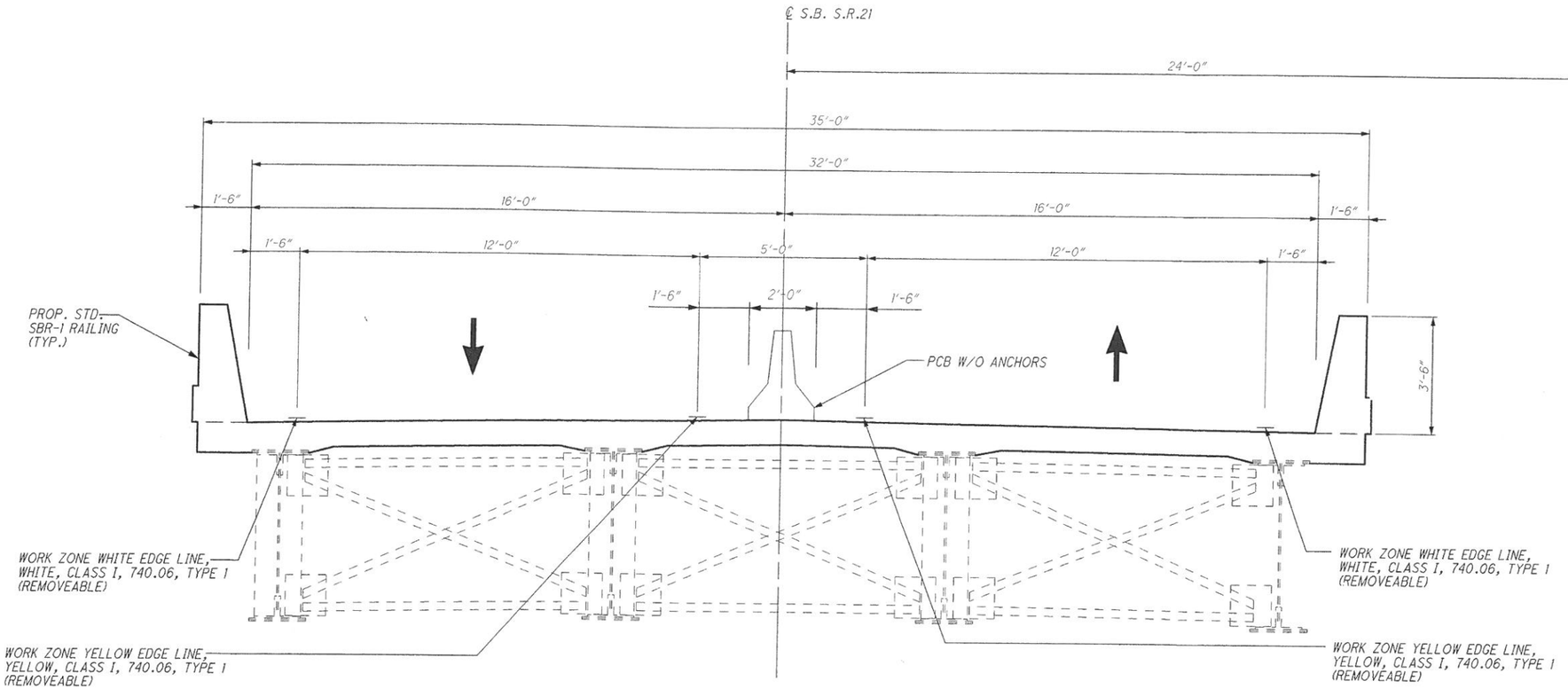

MAINTENANCE OF TRAFFIC TRANSVERSE SECTION

CONSTRUCTION PHASE 3, STA-21-1248L
S.R. 21 SOUTHBOUND
N.T.S.

CALCULATED LOB
CHECKED MAH

MAINTENANCE OF TRAFFIC TRANSVERSE SECTION - CONSTRUCTION PHASE 3
BRIDGE NO. STA 21 - 1238L, US 21 OVER TUSCARAWAS RIVER
PENNA, R.R., B&O R.R. AND T.R. 353

STA-21-12.48

G:\CIVIL\2004054\08\STA\25433\MOT\SHEETS\25433MO002.DGN
2/6/2007
9:19:18 AM
SVARRECCHIA

G:\CIVIL\2004054\00\STA\25433\MOT\SHEETS\25433MP001.DGN
2/6/2007
9:20:52 AM
SVARRECCHIA

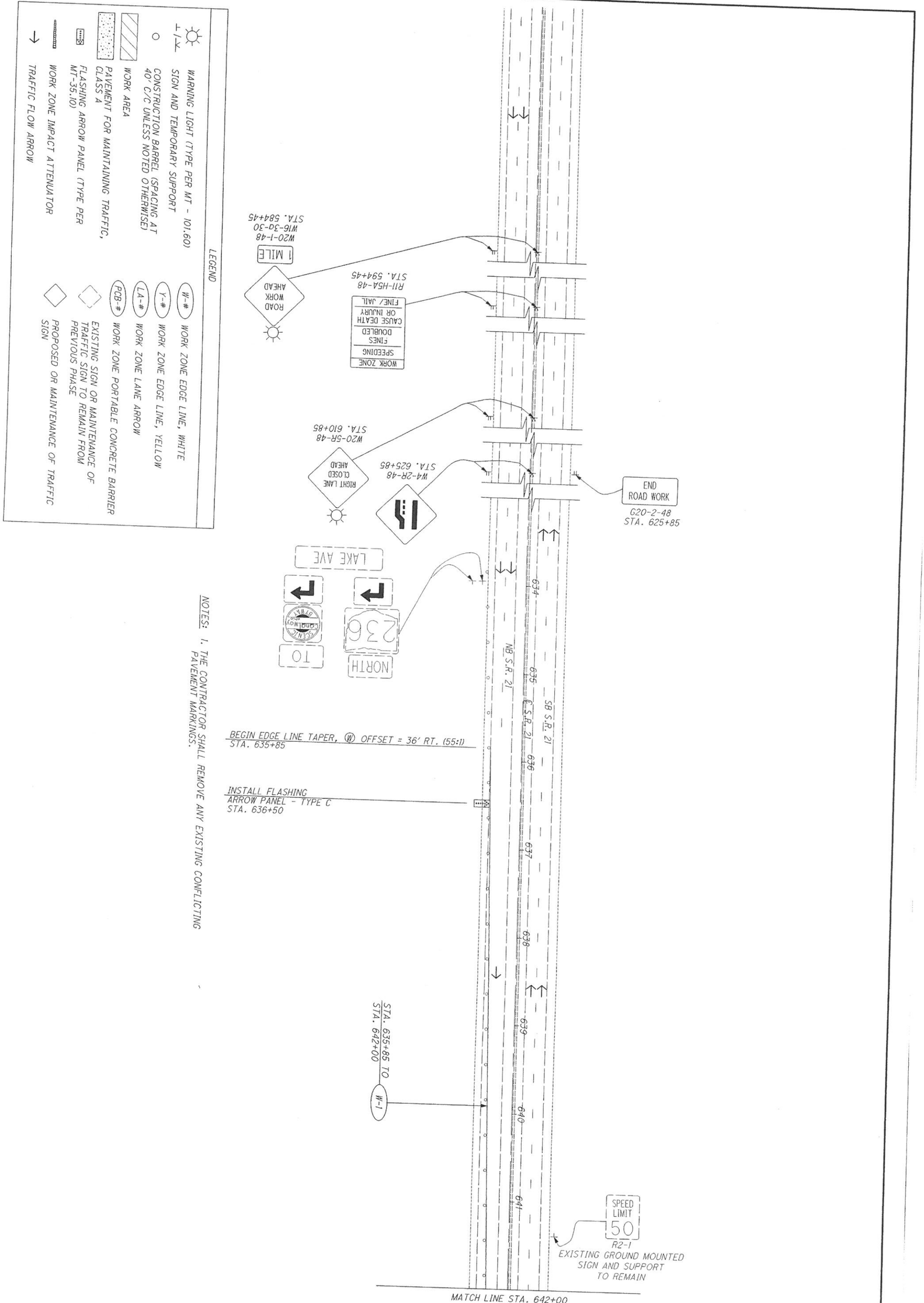

NOTES: 1. THE CONTRACTOR SHALL REMOVE ANY EXISTING CONFLICTING PAVEMENT MARKINGS.

STA-21-12.48

MAINTENANCE OF TRAFFIC - CONSTRUCTION PHASE 2
S.R. 21 - BEGIN TO STA. 642+00

CALCULATED LOB
CHECKED MAH

0 50
25 100
HORIZONTAL SCALE IN FEET

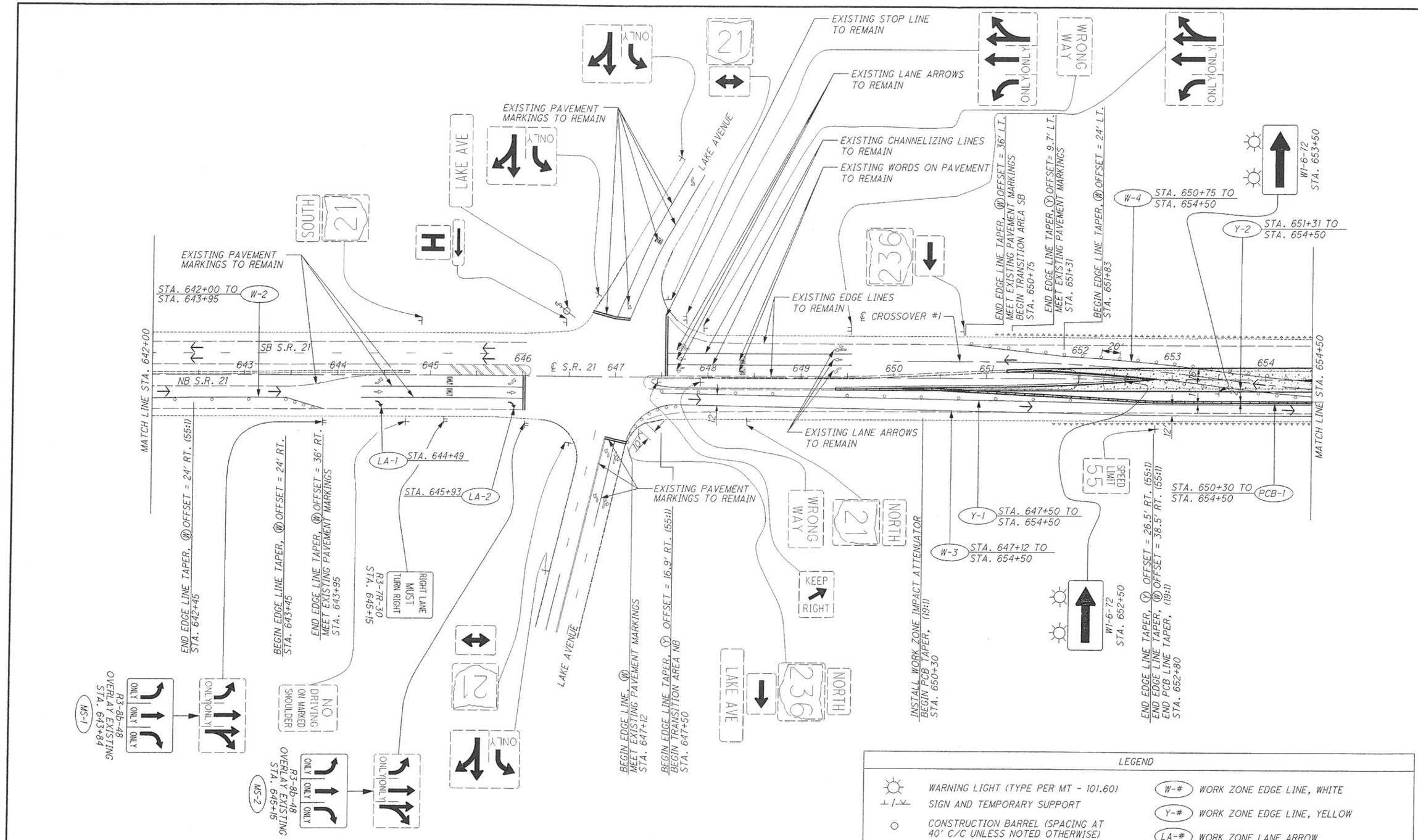

NOTES:
1. THE CONTRACTOR SHALL REMOVE ANY EXISTING CONFLICTING PAVEMENT MARKINGS.
2. SEE CROSSOVER PLANS FOR CROSSOVER GEOMETRICS.
3. ANY SIGNS COVERED OR OVERLAYED SHALL BE DONE SO IN A MANNER WHICH DOES NOT DAMAGE THE SIGNS.

HORIZONTAL SCALE IN FEET 0 25 50 100

CALCULATED LOB
CHECKED MAH

MAINTENANCE OF TRAFFIC - CONSTRUCTION PHASE 2
S.R. 21 - STA. 642+00 TO STA. 654+50

STA-21-12.48

\\AKRN01\DATA\CIVIL\2004054\00\STA\25433\MOT\SHEETS\25433MP002.DGN
2/6/2007
3:21:51 PM
SVARRECCHIA

LEGEND

- WARNING LIGHT (TYPE PER MT - 101.60)
- SIGN AND TEMPORARY SUPPORT
- CONSTRUCTION BARREL (SPACING AT 40' C/C UNLESS NOTED OTHERWISE)
- WORK AREA
- PAVEMENT FOR MAINTAINING TRAFFIC, CLASS A
- FLASHING ARROW PANEL (TYPE PER MT-35.10)
- WORK ZONE IMPACT ATTENUATOR
- TRAFFIC FLOW ARROW
- (W-#) WORK ZONE EDGE LINE, WHITE
- (Y-#) WORK ZONE EDGE LINE, YELLOW
- (LA-#) WORK ZONE LANE ARROW
- (PCB-#) WORK ZONE PORTABLE CONCRETE BARRIER
- EXISTING SIGN OR MAINTENANCE OF TRAFFIC SIGN TO REMAIN FROM PREVIOUS PHASE
- PROPOSED OR MAINTENANCE OF TRAFFIC SIGN

NOTES:
1. THE CONTRACTOR SHALL REMOVE ANY EXISTING CONFLICTING PAVEMENT MARKINGS.
2. SEE CROSSOVER PLANS FOR CROSSOVER GEOMETRICS.
3. WORK ZONE GUARDRAIL SHALL BE INSTALLED BY THE CONTRACTOR AS REQUIRED BY STANDARD DRAWING MT-95.82.

HORIZONTAL SCALE IN FEET
0 25 50 100

CALCULATED LOB
CHECKED MAH

MAINTENANCE OF TRAFFIC - CONSTRUCTION PHASE 2
S.R. 21 - STA. 654+50 TO STA. 667+00

STA-21-12.48

\\AKRON1\DATA\CIVIL\2004054\68\STA2543\MOT\SHEETS\2543MP003.DGN
2/6/2007
3:22:22 PM
SVARRECCHIA

LEGEND

- WARNING LIGHT (TYPE PER MT - 101.60)
- SIGN AND TEMPORARY SUPPORT
- CONSTRUCTION BARREL (SPACING AT 40' C/C UNLESS NOTED OTHERWISE)
- WORK AREA
- PAVEMENT FOR MAINTAINING TRAFFIC, CLASS A
- FLASHING ARROW PANEL (TYPE PER MT-35.10)
- WORK ZONE IMPACT ATTENUATOR
- TRAFFIC FLOW ARROW
- (W-#) WORK ZONE EDGE LINE, WHITE
- (Y-#) WORK ZONE EDGE LINE, YELLOW
- (LA-#) WORK ZONE LANE ARROW
- (PCB-#) WORK ZONE PORTABLE CONCRETE BARRIER
- EXISTING SIGN OR MAINTENANCE OF TRAFFIC SIGN TO REMAIN FROM PREVIOUS PHASE
- PROPOSED OR MAINTENANCE OF TRAFFIC SIGN

NOTES:
1. THE CONTRACTOR SHALL REMOVE ANY EXISTING CONFLICTING PAVEMENT MARKINGS.
2. SEE CROSSOVER PLANS FOR CROSSOVER GEOMETRICS.

CALCULATED LOB
CHECKED

0 50 100
25
HORIZONTAL

MAINTENANCE OF TRAFFIC - CONSTRUCTION PHASE 2

STA-21-12.48

\\KRN01\DATA\CIVIL\2024054\80\STA\25433\MOT\SHEETS\25433MPE04.DGN
2/6/2007
3:23:01 PM
SWARREC1A

LEGEND

- WARNING LIGHT (TYPE PER MT - 101.60)
- SIGN AND TEMPORARY SUPPORT
- CONSTRUCTION BARREL (SPACING AT 40' C/C UNLESS NOTED OTHERWISE)
- WORK AREA
- PAVEMENT FOR MAINTAINING TRAFFIC, CLASS A
- FLASHING ARROW PANEL (TYPE PER MT-35.10)
- WORK ZONE IMPACT ATTENUATOR
- TRAFFIC FLOW ARROW
- (W-#) WORK ZONE EDGE LINE, WHITE
- (Y-#) WORK ZONE EDGE LINE, YELLOW
- (LA-#) WORK ZONE LANE ARROW
- (PCB-#) WORK ZONE PORTABLE CONCRETE BARRIER
- EXISTING SIGN OR MAINTENANCE OF TRAFFIC SIGN TO REMAIN FROM PREVIOUS PHASE
- PROPOSED OR MAINTENANCE OF TRAFFIC SIGN

NOTES:
1. THE CONTRACTOR SHALL REMOVE ANY EXISTING CONFLICTING PAVEMENT MARKINGS.
2. SEE CROSSOVER PLANS FOR CROSSOVER GEOMETRICS.

CALCULATED LOB
CHECKED MAH

0 25 50 100
HORIZONTAL SCALE IN FEET

MAINTENANCE OF TRAFFIC - CONSTRUCTION PHASE 2
S.R. 21 - STA. 679+50 TO STA. 692+00

STA-21-12.48

G:\CIVIL\2004854\00\STA\25433\MOT\SHEETS\25433MP005.DGN
2/6/2007
9:24:33 AM
SVARRECCHIA

LEGEND

- WARNING LIGHT (TYPE PER MT - 101.60)
- SIGN AND TEMPORARY SUPPORT
- CONSTRUCTION BARREL (SPACING AT 40' C/C UNLESS NOTED OTHERWISE)
- WORK AREA
- PAVEMENT FOR MAINTAINING TRAFFIC, CLASS A
- FLASHING ARROW PANEL (TYPE PER MT-35.10)
- WORK ZONE IMPACT ATTENUATOR
- TRAFFIC FLOW ARROW
- W-# WORK ZONE EDGE LINE, WHITE
- Y-# WORK ZONE EDGE LINE, YELLOW
- LA-# WORK ZONE LANE ARROW
- PCB-# WORK ZONE PORTABLE CONCRETE BARRIER
- EXISTING SIGN OR MAINTENANCE OF TRAFFIC SIGN TO REMAIN FROM PREVIOUS PHASE
- PROPOSED OR MAINTENANCE OF TRAFFIC SIGN

NOTES: 1. THE CONTRACTOR SHALL REMOVE ANY EXISTING CONFLICTING PAVEMENT MARKINGS.

2. SEE CROSSOVER PLANS FOR CROSSOVER GEOMETRICS.

HORIZONTAL SCALE IN FEET
0 25 50 100

CALCULATED LOB
CHECKED MAH

MAINTENANCE OF TRAFFIC - CONSTRUCTION PHASE 2

S.R. 21 - STA. 692+00 TO END

STA-21-12.48

\\ARNB1\DATA\C1VIL\2004054\00\STA\25432\MOT\SHEETS\25432MP006.DGN
2/6/2007
3:23:37 PM
SVARRECCHIA

G:\CIVIL\2004054\00\STA\25433\MOT\SHEETS\25433MP011.DGN
2/6/2007
9:26:04 AM
SVARRECCHIA

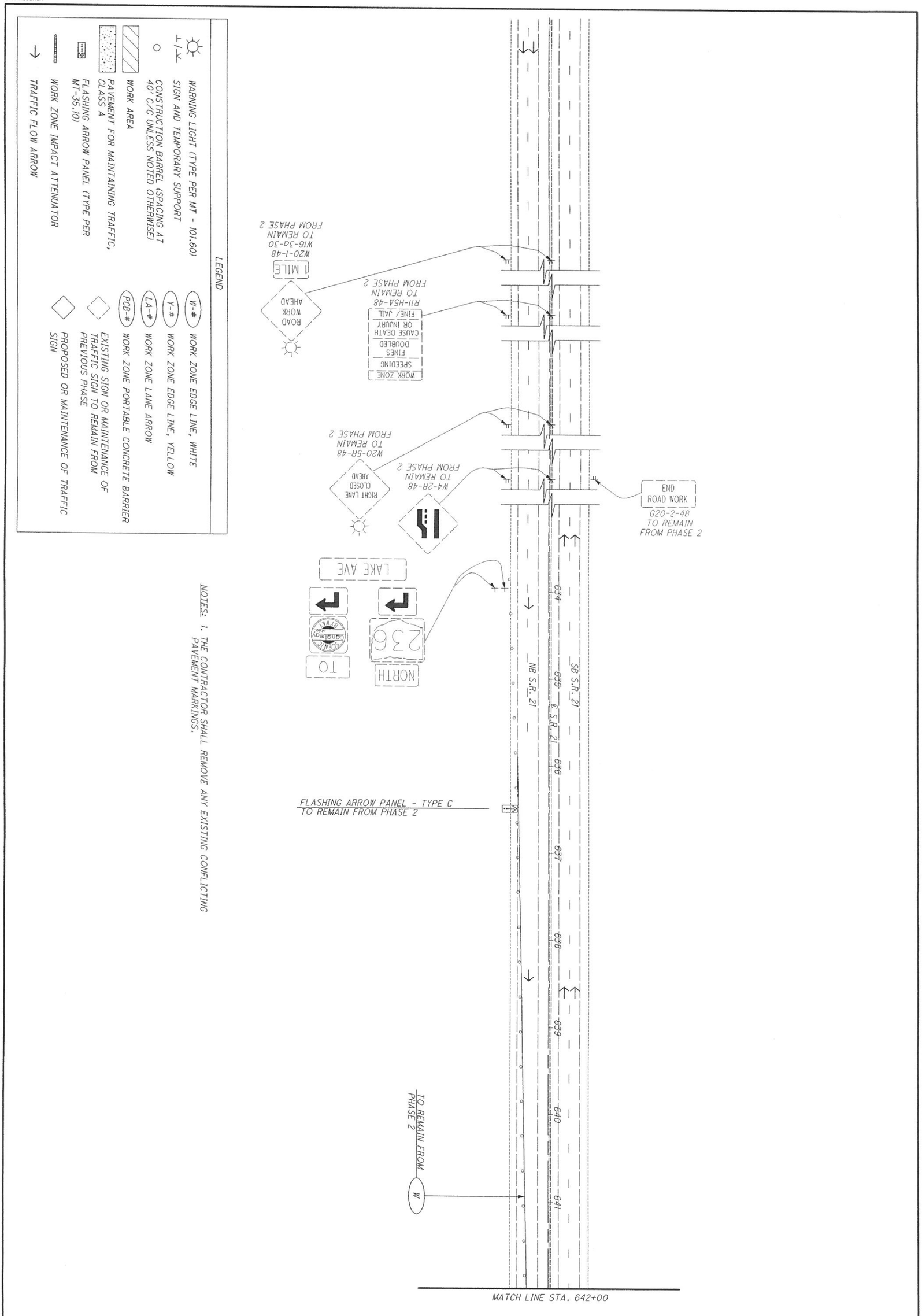

31 / 124	STA-21-12.48	MAINTENANCE OF TRAFFIC - CONSTRUCTION PHASE 3 S.R. 21 - BEGIN TO STA. 642+00	CALCULATED LOB CHECKED MAH	0 50 25 100 HORIZONTAL SCALE IN FEET

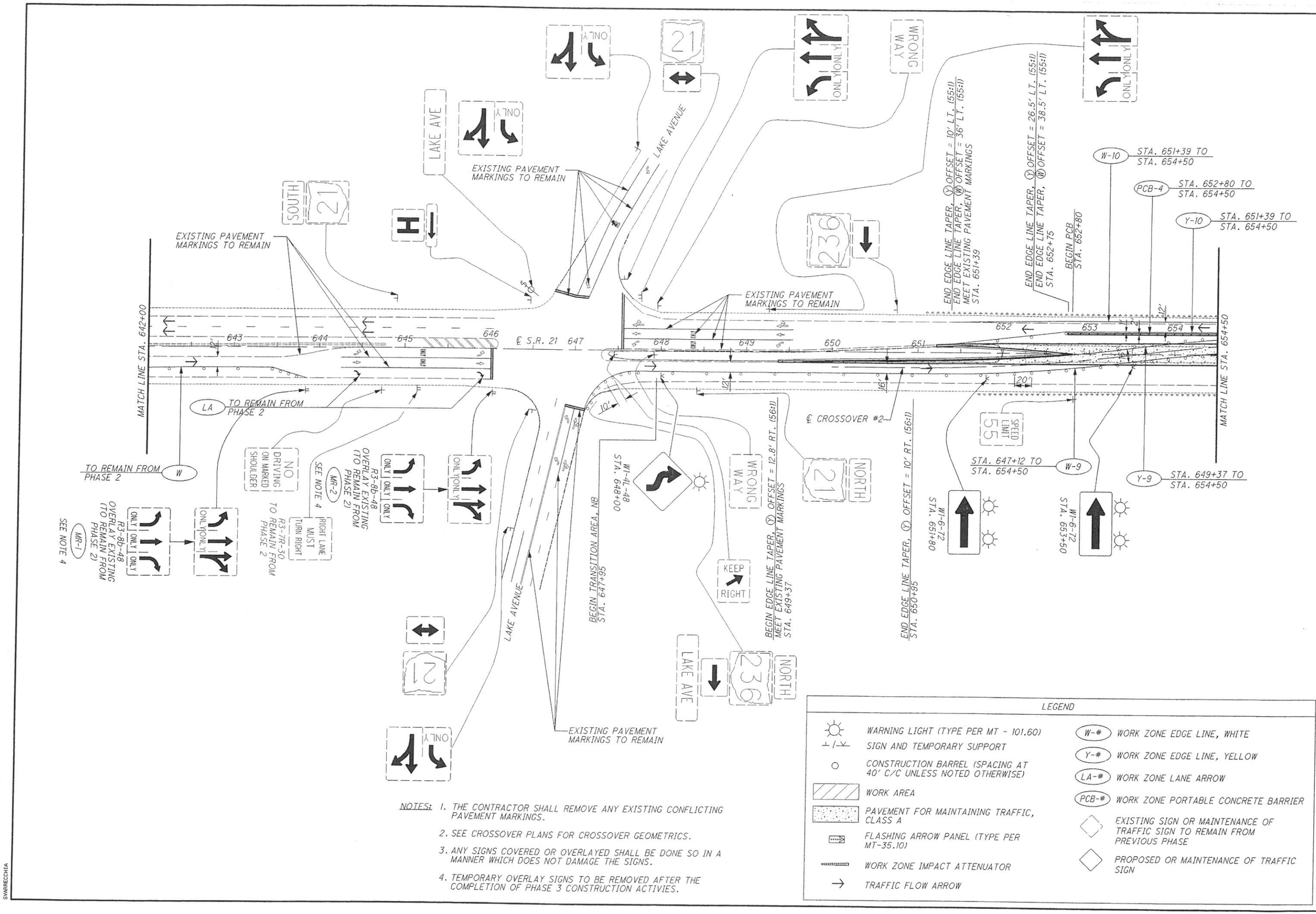

NOTES:
1. THE CONTRACTOR SHALL REMOVE ANY EXISTING CONFLICTING PAVEMENT MARKINGS.
2. SEE CROSSOVER PLANS FOR CROSSOVER GEOMETRICS.
3. ANY SIGNS COVERED OR OVERLAYED SHALL BE DONE SO IN A MANNER WHICH DOES NOT DAMAGE THE SIGNS.
4. TEMPORARY OVERLAY SIGNS TO BE REMOVED AFTER THE COMPLETION OF PHASE 3 CONSTRUCTION ACTIVIES.

LEGEND

- WARNING LIGHT (TYPE PER MT - 101.60)
- SIGN AND TEMPORARY SUPPORT
- CONSTRUCTION BARREL (SPACING AT 40' C/C UNLESS NOTED OTHERWISE)
- WORK AREA
- PAVEMENT FOR MAINTAINING TRAFFIC, CLASS A
- FLASHING ARROW PANEL (TYPE PER MT-35.10)
- WORK ZONE IMPACT ATTENUATOR
- TRAFFIC FLOW ARROW
- (W-#) WORK ZONE EDGE LINE, WHITE
- (Y-#) WORK ZONE EDGE LINE, YELLOW
- (LA-#) WORK ZONE LANE ARROW
- (PCB-#) WORK ZONE PORTABLE CONCRETE BARRIER
- EXISTING SIGN OR MAINTENANCE OF TRAFFIC SIGN TO REMAIN FROM PREVIOUS PHASE
- PROPOSED OR MAINTENANCE OF TRAFFIC SIGN

HORIZONTAL SCALE IN FEET
0 25 50 100

CALCULATED LOB
CHECKED MAH

MAINTENANCE OF TRAFFIC - CONSTRUCTION PHASE 3
S.R. 21 - STA. 642+00 TO STA. 654+50

STA-21-12.48

32
124

\\AKRN01\DATA\CIVIL\2004864\00\STA\25433\MOT\SHEETS\25433MP012.DGN
2/6/2007
3:24:24 PM
SVARRECCHIA

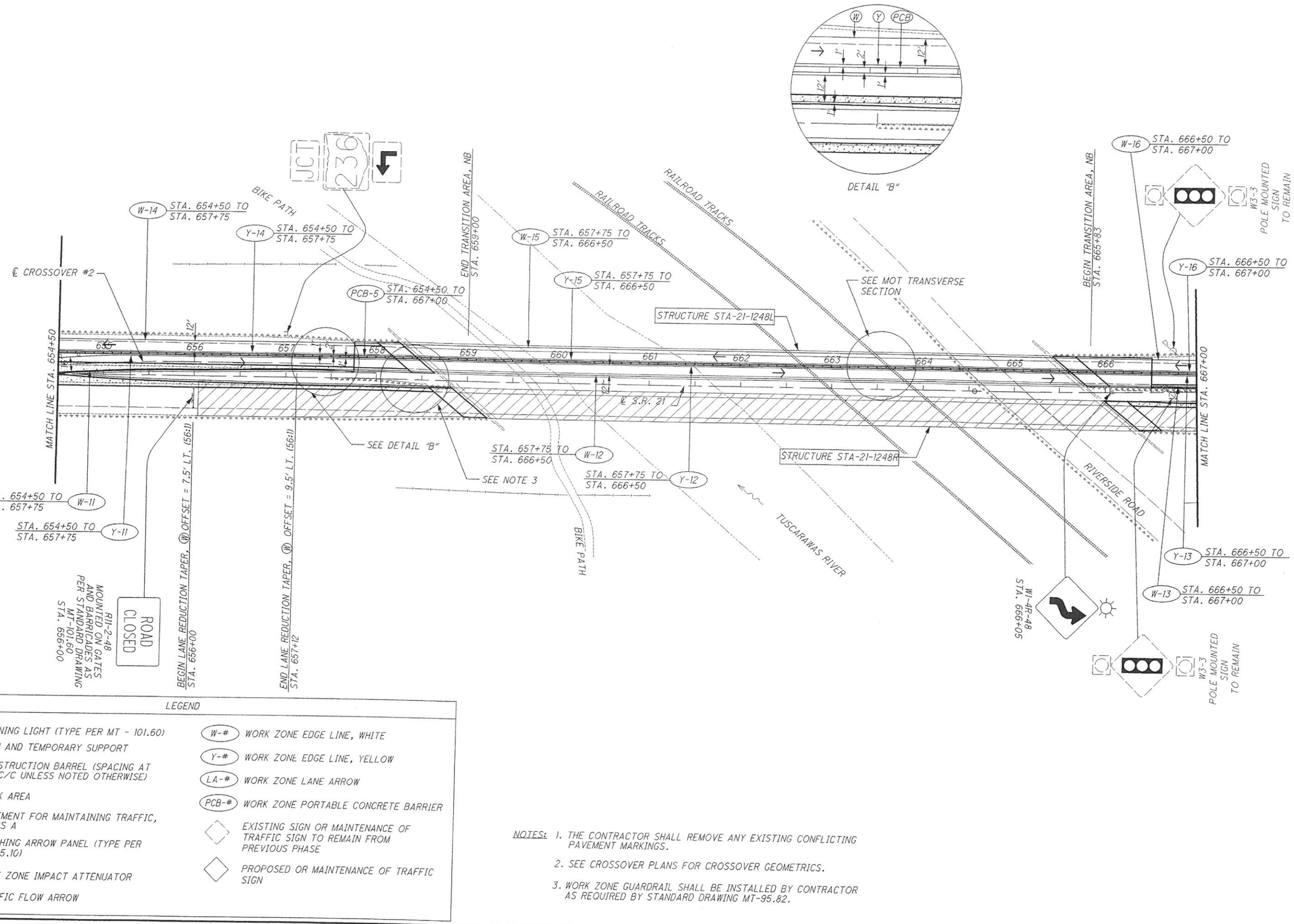

NOTES:
1. THE CONTRACTOR SHALL REMOVE ANY EXISTING CONFLICTING PAVEMENT MARKINGS.
2. SEE CROSSOVER PLANS FOR CROSSOVER GEOMETRICS.
3. WORK ZONE GUARDRAIL SHALL BE INSTALLED BY CONTRACTOR AS REQUIRED BY STANDARD DRAWING MT-95.82.

HORIZONTAL SCALE IN FEET
0 25 50 100
CALCULATED LOB
CHECKED MAH

MAINTENANCE OF TRAFFIC - CONSTRUCTION PHASE 3
S.R. 21 - STA. 654+50 TO STA. 667+00

STA-21-12.48

33
124

\\AKRN01\DATA\CIVIL\2024854\00\STA\25433\MOT\SHEETS\25433MP013.DGN
2/6/2027
4:25:20 PM
SCOX

\\AKRN01\DATA\CIVIL\2004054\00\STA\25433\MOT\SHEETS\25433MP814.DGN
2/6/2007
3:24:53 PM
SVARRECCHIA

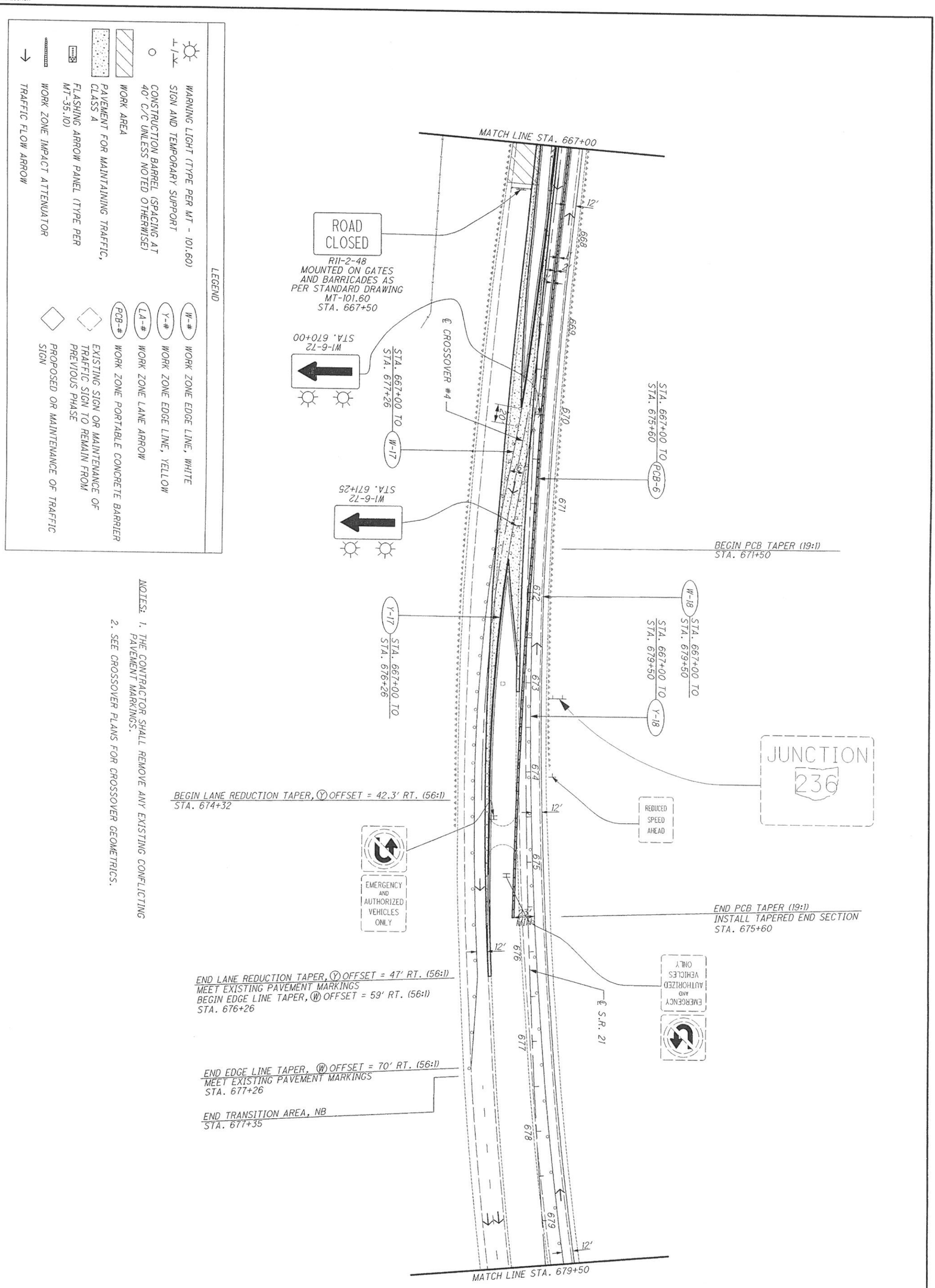

STA-21-12.48

MAINTENANCE OF TRAFFIC - CONSTRUCTION PHASE 3

S.R. 21 - STA. 667+00 TO STA. 679+50

CALCULATED LOB
CHECKED MAH

0 50
25 100
HORIZONTAL SCALE IN FEET

N

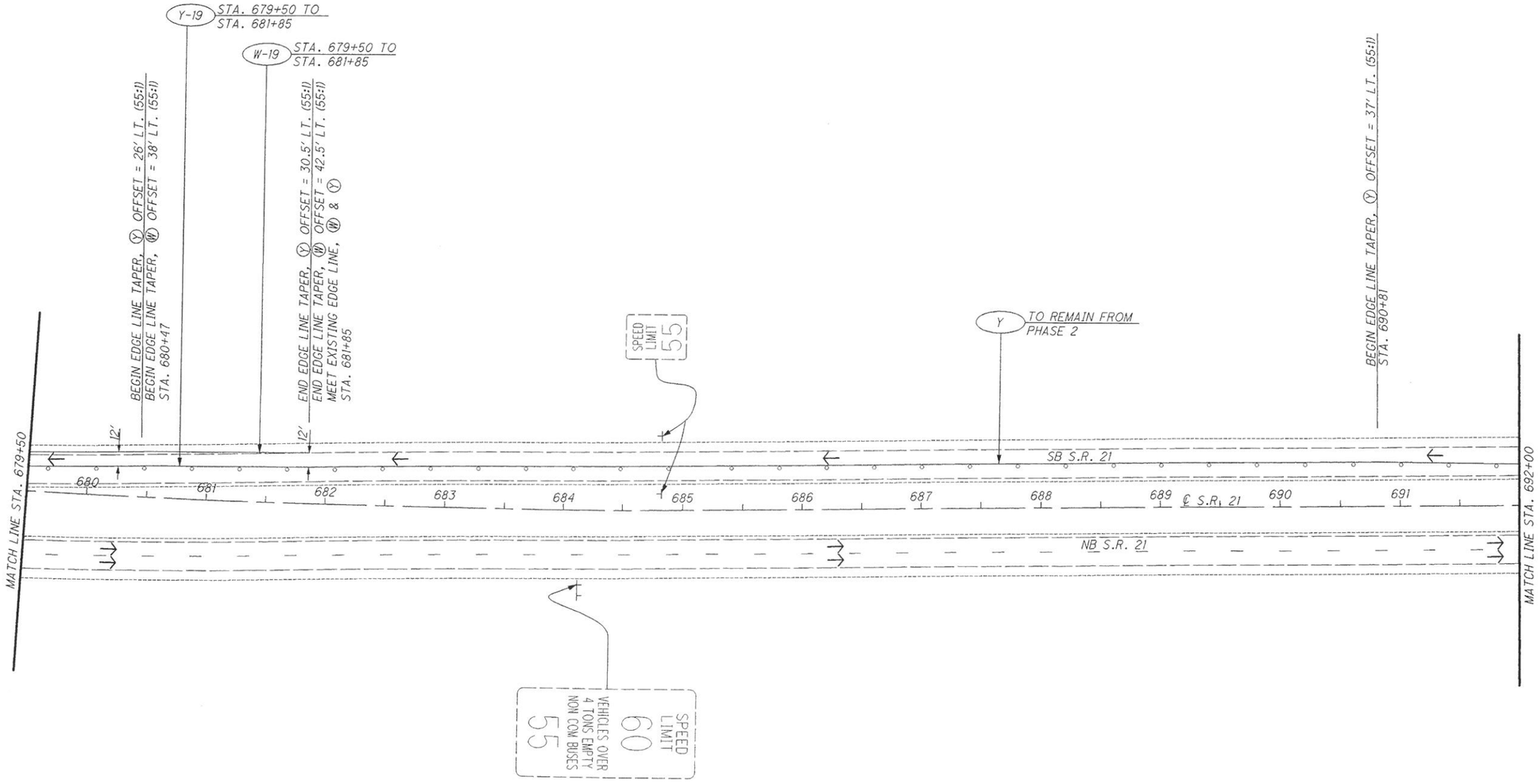

LEGEND

- WARNING LIGHT (TYPE PER MT - 101.60)
- SIGN AND TEMPORARY SUPPORT
- CONSTRUCTION BARREL (SPACING AT 40' C/C UNLESS NOTED OTHERWISE)
- WORK AREA
- PAVEMENT FOR MAINTAINING TRAFFIC, CLASS A
- FLASHING ARROW PANEL (TYPE PER MT-35.10)
- WORK ZONE IMPACT ATTENUATOR
- TRAFFIC FLOW ARROW
- (W-#) WORK ZONE EDGE LINE, WHITE
- (Y-#) WORK ZONE EDGE LINE, YELLOW
- (LA-#) WORK ZONE LANE ARROW
- (PCB-#) WORK ZONE PORTABLE CONCRETE BARRIER
- EXISTING SIGN OR MAINTENANCE OF TRAFFIC SIGN TO REMAIN FROM PREVIOUS PHASE
- PROPOSED OR MAINTENANCE OF TRAFFIC SIGN

NOTES: 1. THE CONTRACTOR SHALL REMOVE ANY EXISTING CONFLICTING PAVEMENT MARKINGS.

HORIZONTAL SCALE IN FEET
0 25 50 100

CALCULATED LOB
CHECKED MAH

MAINTENANCE OF TRAFFIC - CONSTRUCTION PHASE 3

S.R. 21 - STA. 679+50 TO STA. 692+00

STA-21-12.48

G:\CIVIL\2034054\00\STA\25433\MOT\SHEETS\25433MP015.DGN
2/6/2007
9:28:23 AM
SWARRECCHIA

G:\CIVIL\2024054\00\STA\25433\MOT\SHEETS\25433MP016.DGN
2/6/2007
9:28:41 AM
SVARRECCHIA

LEGEND

- WARNING LIGHT (TYPE PER MT - 101.60)
- SIGN AND TEMPORARY SUPPORT
- CONSTRUCTION BARREL (SPACING AT 40' C/C UNLESS NOTED OTHERWISE)
- WORK AREA
- PAVEMENT FOR MAINTAINING TRAFFIC, CLASS A
- FLASHING ARROW PANEL (TYPE PER MT-35.10)
- WORK ZONE IMPACT ATTENUATOR
- TRAFFIC FLOW ARROW
- W-# WORK ZONE EDGE LINE, WHITE
- Y-# WORK ZONE EDGE LINE, YELLOW
- LA-# WORK ZONE LANE ARROW
- PCB-# WORK ZONE PORTABLE CONCRETE BARRIER
- EXISTING SIGN OR MAINTENANCE OF TRAFFIC SIGN TO REMAIN FROM PREVIOUS PHASE
- PROPOSED OR MAINTENANCE OF TRAFFIC SIGN

NOTES:
1. THE CONTRACTOR SHALL REMOVE ANY EXISTING CONFLICTING PAVEMENT MARKINGS.

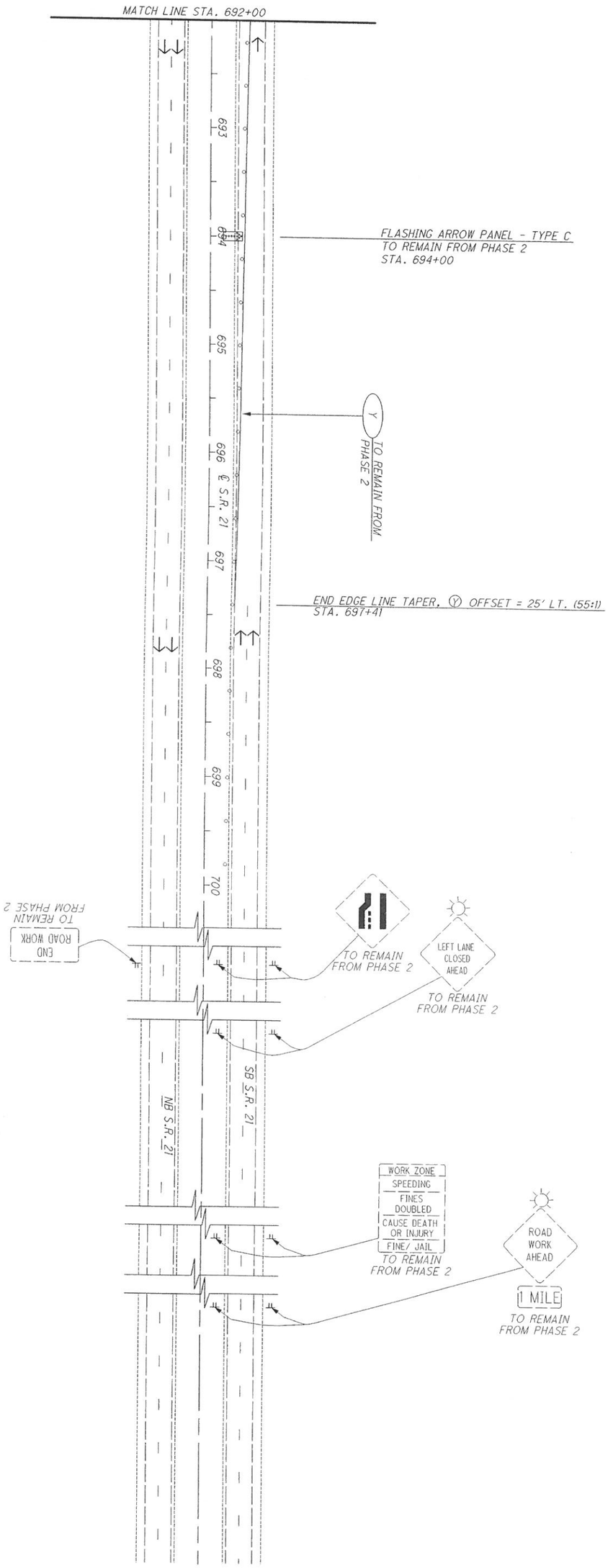

STA-21-12.48

MAINTENANCE OF TRAFFIC - CONSTRUCTION PHASE 3
S.R. 21 - STA. 692+00 TO END

CALCULATED LOB
CHECKED MAH

0 50
25 100
HORIZONTAL SCALE IN FEET

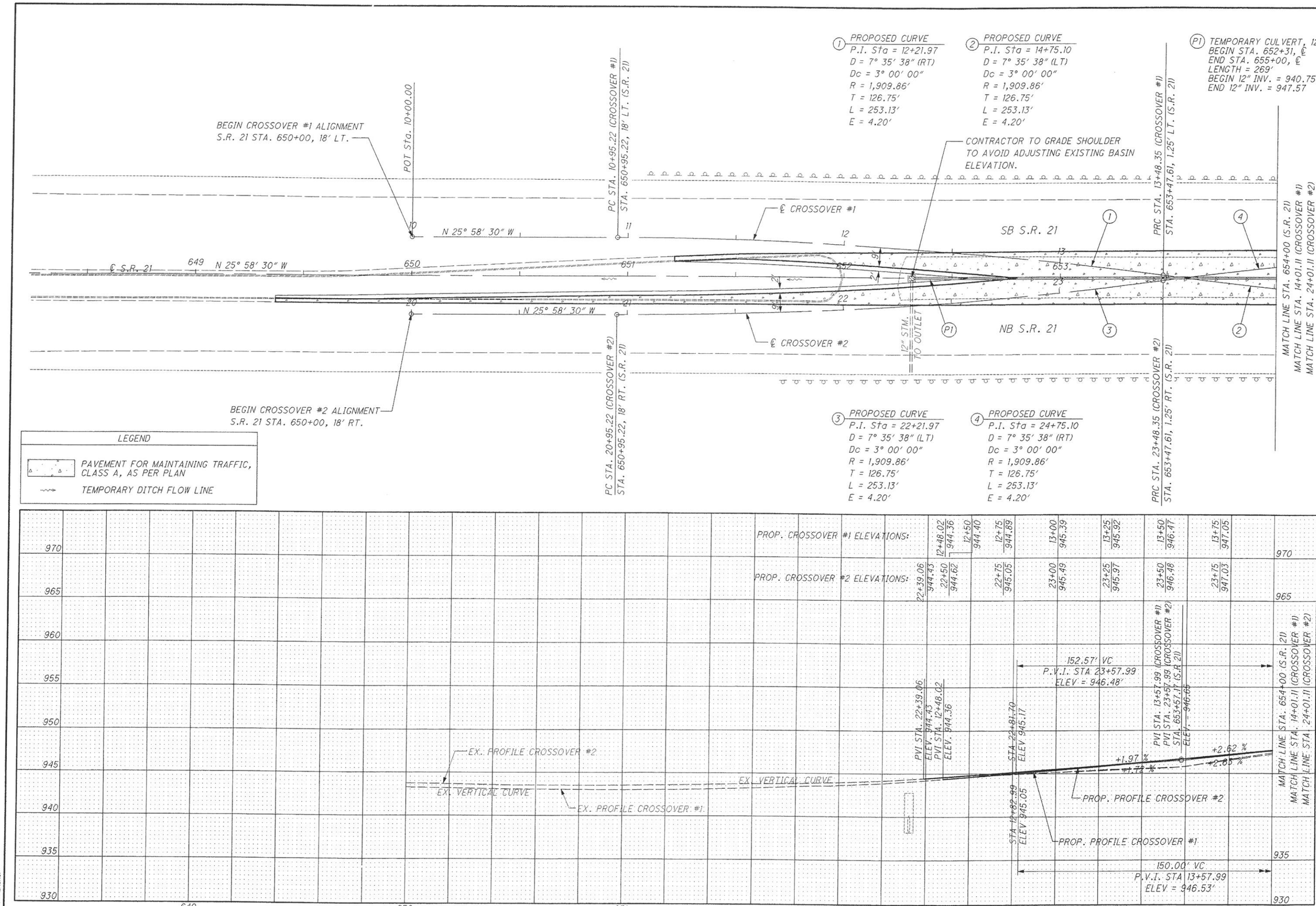

HORIZONTAL SCALE IN FEET
0 10 20 40

CALCULATED LOB
CHECKED MAH

GEOMETRIC PLAN - CROSSOVERS #1 & #2
BEGIN TO STA. 654+00

STA-21-12.48

\\AKRN01\DATA\CIVIL\2004054\00\STA\25433\MOT\SHEETS\25433MH001.DGN
2/6/2007
10:32:57 AM
LBLANKENSHIP

(P1) TEMPORARY CULVERT, 12"
BEGIN STA. 652+31, ℄
END STA. 655+00, ℄
LENGTH = 269'
BEGIN 12" INV. = 940.75
END 12" INV. = 947.57

(4) PROPOSED CURVE
P.I. Sta = 24+75.10
D = 7° 35' 38" (RT)
Dc = 3° 00' 00"
R = 1,909.86'
T = 126.75'
L = 253.13'
E = 4.20'

STA. 655+00, ℄
PROP. 2-2A CATCH BASIN
(TEMPORARY)
12" INV. = 947.57
D = 2.00'

EX. WATER MAIN

EX. MH - WATER MAIN VAULT

℄ CROSSOVER #2

SEE NOTE 1

℄ CROSSOVER #1

MATCH LINE STA. 654+00 (S.R. 21)
MATCH LINE STA. 14+01.11 (CROSSOVER #1)
MATCH LINE STA. 24+01.11 (CROSSOVER #2)

PT STA. 26+01.48 (CROSSOVER #2)
STA. 656+00.00, 15.50' LT (S.R. 21)

POT STA. 27+51.48 (CROSSOVER #2)
STA. 657+50.00, 15.50' LT. (S.R. 21)

STRUCTURE STA-21-1248L

END CROSSOVER #2 ALIGNMENT
S.R. 21 STA. 657+50.00, 15.50' LT.

PAVEMENT RECONSTRUCTION LIMIT
STA. 657+75

APPROACH SLAB 25'

SB S.R. 21

N 25° 58' 30" W

℄ S.R. 21

NB S.R. 21

APPROACH SLAB

END CROSSOVER #1 ALIGNMENT
S.R. 21 STA. 657+00.00, 15.50' RT.

STRUCTURE STA-21-1248R

(2) PROPOSED CURVE
P.I. Sta = 14+75.10
D = 7° 35' 38" (LT)
Dc = 3° 00' 00"
R = 1,909.86'
T = 126.75'
L = 253.13'
E = 4.20'

PT STA. 16+01.48 (CROSSOVER #1)
STA. 656+00.00, 15.50' RT. (S.R. 21)

POT STA. 17+01.48 (CROSSOVER #1)
STA. 657+00.00, 15.50' RT. (S.R. 21)

LEGEND

PAVEMENT FOR MAINTAINING TRAFFIC, CLASS A, AS PER PLAN

TEMPORARY DITCH FLOW LINE

NOTES: 1. THE CONTRACTOR SHALL PROTECT THE EXISTING MONUMENT BOX AT STATION 654+15 BY BURYING IT. UPON COMPLETION OF THE IMPROVEMENT THE MONUMENT SHALL BE EXCAVATED AND RESTORED TO PRE-CONSTRUCTION CONDITION.

	14+00	14+25	14+50	14+75	14+94
PROP. CROSSOVER #1 ELEVATIONS:	947.65	948.29	948.94	949.53	950.09
PROP. CROSSOVER #2 ELEVATIONS:	24+00 947.62	24+25 948.24	24+50 948.90	24+75 949.55	25+00 950.21	25+05.02 950.34

MATCH LINE STA. 654+00 (S.R. 21)
MATCH LINE STA. 14+01.11 (CROSSOVER #1)
MATCH LINE STA. 24+01.11 (CROSSOVER #2)

152.57' VC
P.V.I. STA 23+57.99
ELEV = 946.48'

STA 24+34.28
ELEV 948.48

PVI STA. 14+94.00
ELEV. 950.09

PVI STA. 25+05.02
ELEV. 950.34

ex: +2.62%
ex: +2.33%

EX. PROFILE CROSSOVER #1

EX. PROFILE CROSSOVER #2

PROP. PROFILE CROSSOVER #1

EX. WATER

PROP. PROFILE CROSSOVER #2

STA 14+32.99
ELEV 948.49

150.00' VC
P.V.I. STA 13+57.99
ELEV = 946.53'

970 965 960 955 950 945 940 935 930

655 656 657 658 659

HORIZONTAL SCALE IN FEET
0 10 20 40

CALCULATED LOB
CHECKED MAH

GEOMETRIC PLAN - CROSSOVERS #1 & #2
STA. 654+00 TO END

STA-21-12.48

38
124

G:\CIVIL\2004854\00\STA\25433\MOT\SHEETS\25433MH002.DGN
2/6/2007
9:29:38 AM
SWARRECCHIA

LEGEND

PAVEMENT FOR MAINTAINING TRAFFIC, CLASS A, AS PER PLAN

TEMPORARY DITCH FLOW LINE

BEGIN CROSSOVER #4 ALIGNMENT
STA. 667+00.00, 11.62' LT. (S.R. 21)

STRUCTURE STA-21-1248L

PAVEMENT RECONSTRUCTION LIMIT STA. 666+50

APPROACH SLAB

25'

N 25° 58' 30" W

EX. 15" STM. TO OUTLET

℄ SURVEY & CONSTRUCTION S.R. 21

℄ SOUTHBOUND LANES

℄ CROSSOVER #4

℄ CROSSOVER #3

SB S.R. 21

NB S.R. 21

℄ NORTHBOUND LANES

STRUCTURE STA-21-1248R

BEGIN CROSSOVER #3 ALIGNMENT
STA. 667+00, 19.40' RT. (S.R. 21)

(1) EXISTING CURVE (S.R. 21)
P.I. Sta = 674+85.13
D = 15° 20' 30" (LT)
Dc = 0° 45' 00"
R = 7,639.43'
T = 1,028.93'
L = 2,045.55'
E = 68.98'

PC Sta. 668+15.41

PC STA. 41+83.11 (CROSSOVER #4)
STA. 668+83.12, 3.58' LT (S.R. 21)

PC STA. 669+20.14

(8) PROPOSED CURVE
P.I. Sta = 42+68.18
D = 5° 06' 03" (RT)
Dc = 3° 00' 00"
R = 1,909.86'
T = 85.07'
L = 170.03'
E = 1.89'

(SBL) EXISTING CURVE
(℄ SOUTHBOUND LANES)
P.I. Sta = 674+32.70
D = 15° 20' 30" (LT)
Dc = 0° 45' 09"
R = 4,583.66'
T = 617.36'
L = 1,227.34'
E = 41.39'

(9) PROPOSED CURVE
P.I. Sta = 45+47.25
D = 11° 36' 26" (LT)
Dc = 3° 00' 00"
R = 1,909.86'
T = 194.12'
L = 386.91'
E = 9.84'

PRC Sta. 43+53.14 (CROSSOVER #4)
STA. 670+51.91, 15.33' RT. (S.R. 21)

MATCH LINE STA. 671+00 (S.R. 21)
MATCH LINE STA. 34+01.51 (CROSSOVER #3)
MATCH LINE STA. 44+01.95 (CROSSOVER #4)
MATCH LINE STA. 670+98.95 SOUTHBOUND S.R.21
MATCH LINE STA. 671+03.30 NORTHBOUND S.R.21

PC STA. 31+00.35 (CROSSOVER #3)
STA. 668+00.00, 23.26' RT (S.R. 21)

(P2) TEMPORARY CULVERT, 15"
BEGIN STA. 668+50, 10.5' RT.
END STA. 672+50, 25' RT.
LENGTH = 400'

(NBL) EXISTING CURVE
(℄ NORTHBOUND LANES)
P.I. Sta = 675+37.50
D = 15° 20' 30" (LT)
Dc = 0° 44' 52"
R = 4,583.66'
T = 617.36'
L = 1,227.34'
E = 41.39'

(5) PROPOSED CURVE
P.I. STA. 33+25.24
D = 13° 25' 53" (LT)
Dc = 3° 00' 00"
R = 1,909.86'
T = 224.89'
L = 447.72'
E = 13.19'

HORIZONTAL SCALE IN FEET
0 10 20 40

CALCULATED LOB
CHECKED MAH

GEOMETRIC PLAN - CROSSOVERS #3 & #4
BEGIN TO STA. 671+00

STA-21-12.48

39
124

PROP. CROSSOVER #3 ELEVATIONS:
32+04.94 987.06
32+25 987.47
32+50 987.99
32+75 988.50
33+00 989.02
33+25 989.49
33+50 989.94
33+75 990.35
34+00 990.72

PROP. CROSSOVER #4 ELEVATIONS:
42+32.78 987.43
42+50 987.79
42+75 988.31
43+00 988.83
43+25 989.35
43+50 989.86
43+75 990.33
44+00 990.75

200.00' VC
P.V.I. STA 33+83.53
ELEV = 990.75
K = 184

150.00' VC
P.V.I. STA 44+08.53
ELEV = 991.09'
K = 133

PVI STA. 32+04.94
ELEV. 987.06

PVI STA. 42+32.78
ELEV. 987.43

STA 32+83.53
ELEV 988.68

STA 43+33.53
ELEV 989.53

STA. 33+83.53 (CROSSOVER #3)
PVI STA. 43+83.81 (CROSSOVER #4)
STA. 670+82.11 (S.R. 21)
ELEV. = 990.48

PROP. PROFILE CROSSOVER #3

PROP. PROFILE CROSSOVER #4

EX. PROFILE CROSSOVER #3

EX. PROFILE CROSSOVER #4

+1.90%
+1.63%
+2.06 %
+2.08 %

1015 1010 1005 1000 995 990 985 980 975

666 667 668 669 670

G:\CIVIL\2024054\00\STA\25433-MOT\SHEETS\25433HM003.DGN
2/6/2007
9:38:13 AM
SVARRECCHIA

LEGEND

PAVEMENT FOR MAINTAINING TRAFFIC, CLASS A, AS PER PLAN

TEMPORARY DITCH FLOW LINE

(5) PROPOSED CURVE
P.I. STA. 33+25.24
D = 13° 25′ 53″ (LT)
Dc = 3° 00′ 00″
R = 1,909.86′
T = 224.89′
L = 447.72′
E = 13.19′

(6) PROPOSED CURVE
P.I. STA. 36+43.15
D = 5° 42′ 00″ (RT)
Dc = 3° 00′ 00″
R = 1,909.86′
T = 95.08′
L = 190.00′
E = 2.37′

(SBL) EXISTING CURVE
(℄ SOUTHBOUND LANES)
P.I. Sta = 674+32.70
D = 15° 20′ 30″ (LT)
Dc = 0° 45′ 09″
R = 4,583.66′
T = 617.36′
L = 1,227.34′
E = 41.39′

(1) EXISTING CURVE (S.R. 21)
P.I. Sta = 674+85.13
D = 15° 20′ 30″ (LT)
Dc = 0° 45′ 00″
R = 7,639.43′
T = 1,028.93′
L = 2,045.55′
E = 68.98′

(7) PROPOSED CURVE
P.I. STA. 38+14.04
D = 1° 54′ 06″ (LT)
Dc = 1° 15′ 06″
R = 4,577.66′
T = 75.97′
L = 151.93′
E = 0.63′

PRC STA. 35+48.07 (CROSSOVER #3)
STA. 672+45.55, 4.03′ RT. (S.R. 21)

PRC STA. PT STA. 37+38.07 (CROSSOVER #3)
STA. 674+35.08, 9.06′ LT.

PT STA. 38+90.00

END CROSSOVER #3 ALIGNMENT
S.R. 21 STA. 675+87.20, 11.10′ LT.

MATCH LINE STA. 671+00 (S.R. 21)
MATCH LINE STA. 34+01.51 (CROSSOVER #3)
MATCH LINE STA. 44+01.95 (CROSSOVER #4)
MATCH LINE STA. 670+98.95 SOUTHBOUND S.R. 21
MATCH LINE STA. 671+03.30 NORTHBOUND S.R. 21

SB S.R. 21

NB S.R. 21

EX. 15" STM. TO OUTLET

℄ CROSSOVER #3

℄ SOUTHBOUND LANES

℄ SURVEY & CONSTRUCTION S.R. 21

℄ NORTHBOUND LANES

(NBL) EXISTING CURVE
(℄ NORTHBOUND LANES)
P.I. Sta = 675+37.50
D = 15° 20′ 30″ (LT)
Dc = 0° 44′ 52″
R = 4,583.66′
T = 617.36′
L = 1,227.34′
E = 41.39′

(9) PROPOSED CURVE
P.I. STA. 45+47.25
D = 11° 36′ 26″ (LT)
Dc = 3° 00′ 00″
R = 1,909.86′
T = 194.12′
L = 386.91′
E = 9.84′

(P2) TEMPORARY CULVERT, 15″
BEGIN STA. 668+50, 10.5′ RT.
END STA. 672+50, 25′ RT.
LENGTH = 400′

℄ CROSSOVER #4

PCC STA. 47+40.04 (CROSSOVER #4)
STA. 674+34.96, 50.35′ RT.

(10) PROPOSED CURVE
P.I. STA. 48+37.54
D = 2° 26′ 27″ (LT)
Dc = 1° 15′ 07″
R = 4,576.46′
T = 97.49′
L = 194.96′
E = 1.04′

END CROSSOVER #4 ALIGNMENT
S.R. 21 STA. 676+28.61, 51.51′ RT.

PT STA. 49+35.00

HORIZONTAL SCALE IN FEET
0 10 20 40

CALCULATED LOB
CHECKED MAH

GEOMETRIC PLAN - CROSSOVERS #3 & #4
STA. 671+00 TO END

STA-21-12.48

PROP. CROSSOVER #3 ELEVATIONS:

34+25	34+50	34+75	35+00	35+26	35+26.41
991.06	991.37	991.64	991.89	992.13	992.15

PROP. CROSSOVER #4 ELEVATIONS:

44+25	44+50	44+75	45+00	45+26	45+26.41	45+50	45+62.12
991.12	991.44	991.72	991.97	992.21	992.15	992.44	992.56

200.00′ VC P.V.I. STA 33+83.53
ELEV = 990.75′
K = 184

150.00′ VC

P.V.I. STA 44+08.53
ELEV = 991.09′
K = 133

PVI STA. 35+26.41
ELEV. 992.15

PVI STA. 45+62.12
ELEV. 992.56

STA 34+83.53
ELEV. 991.73

STA 44+83.53
ELEV. 991.81

MATCH LINE STA. 671+00 (S.R. 21)
MATCH LINE STA. 34+01.51 (CROSSOVER #3)
MATCH LINE STA. 44+01.98 (CROSSOVER #4)

PROP. PROFILE CROSSOVER #4

+0.96 %

+0.98 %

ex. +0.53%

ex. +1.30%

EX. PROFILE CROSSOVER #4

EX. PROFILE CROSSOVER #3

PROP. PROFILE CROSSOVER #3

EX. 15" STORM OUTLET

1010 1005 1000 995 990 985 980 975

672 673 674 675 676

G:\CIVIL\20040454\00\STA\25433\MOT\SHEETS\25433MH004.DGN
2/6/2007
9:49:57 AM
SVARRECCHIA

SEEDING	
END WIDTH	SQ. YDS.

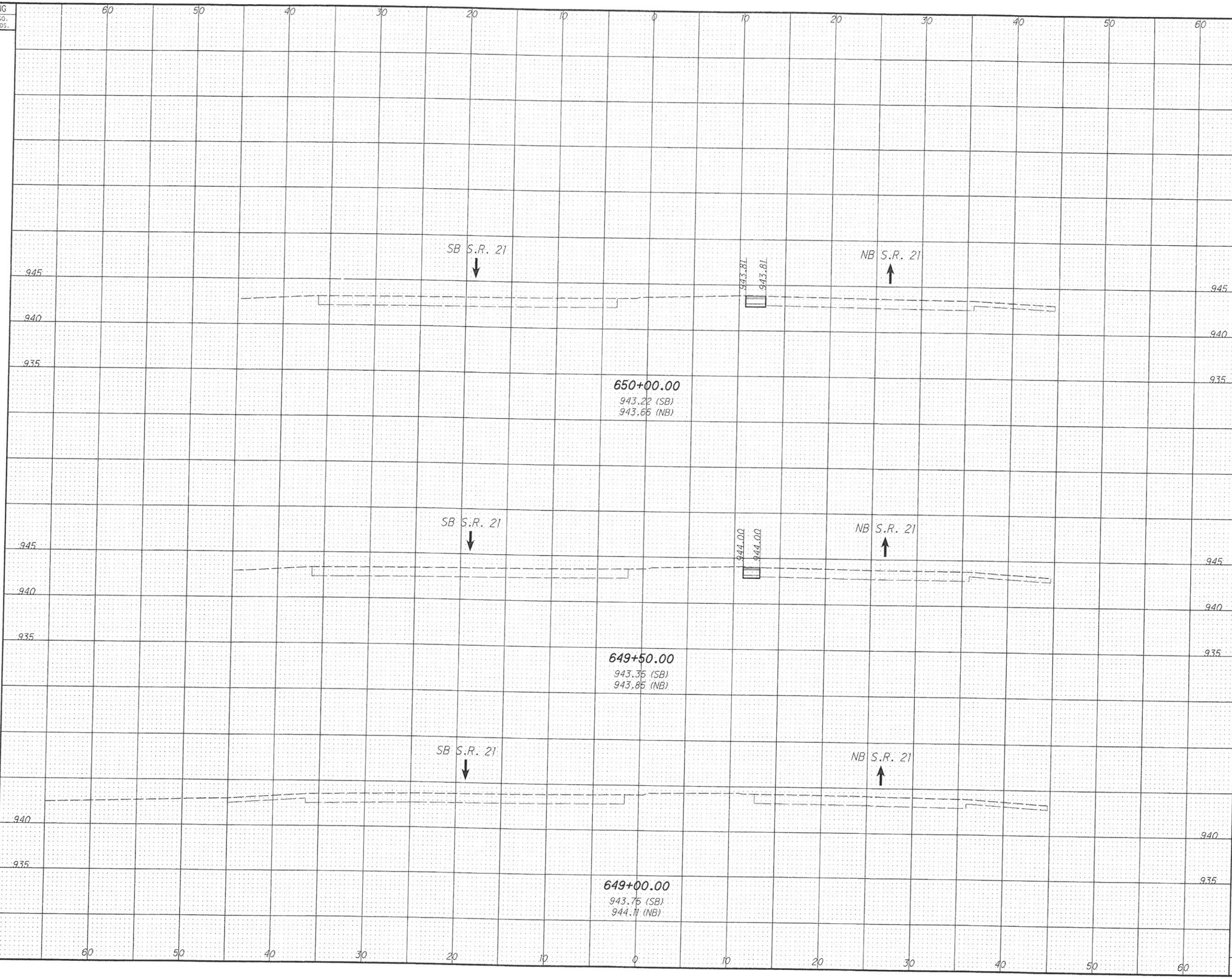

END AREA		VOLUME	
CUT	FILL	CUT	FILL
		7	0
3	0		
		5	0
2	0		
		2	0
0	0		
		14	0

CALCULATED BJE
CHECKED MAH

MAINTENANCE OF TRAFFIC CROSS SECTIONS - CROSSOVERS
STA. 649+00.00 TO STA. 650+00.00

STA-21-12.48

41
124

G:\CIVIL\2084854A00\STA\25433\MOT\SHEETS\25433X0001.DGN
2/6/2007
9:49:19 AM
SWARRECCHIA

SEEDING	
END WIDTH	SQ. YDS.

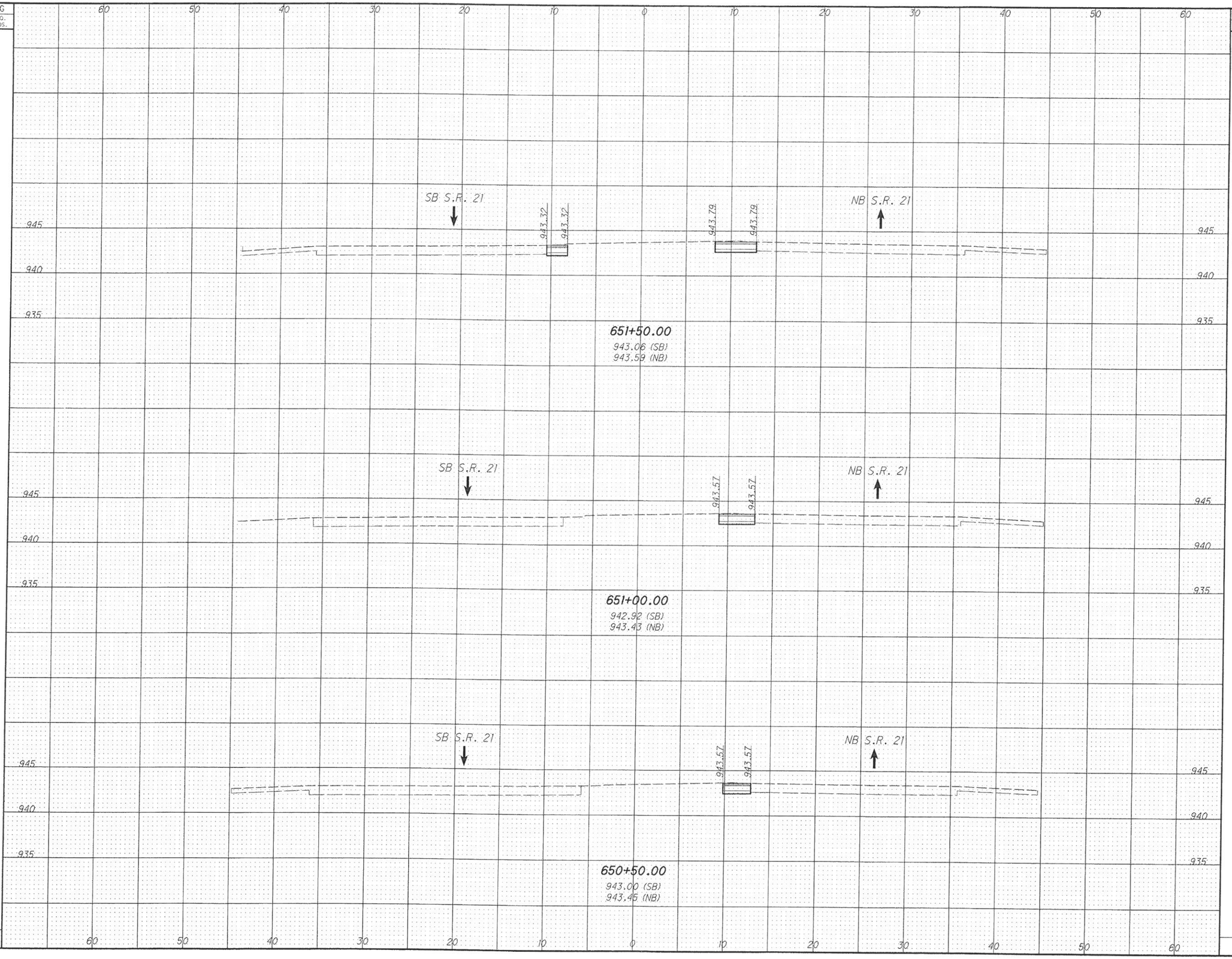

END AREA		VOLUME	
CUT	FILL	CUT	FILL
		20	0
8	0		
		12	0
5	0		
		8	0
4	0		
		40	0

CALCULATED BJE
CHECKED MAH

TRAFFIC CROSS SECTIONS - CROSSOVERS
MAINTENANCE OF TRAFFIC
STA. 650+50.00 TO STA. 651+50.00

STA-21-12.48

42
124

G:\CIVIL\2004854\00\STA\25433\MOT\SHEETS\25433XS001.DGN
2/6/2007
9:39:57 AM
SWARREGCHIA

SEEDING	
END WIDTH	SQ. YDS.

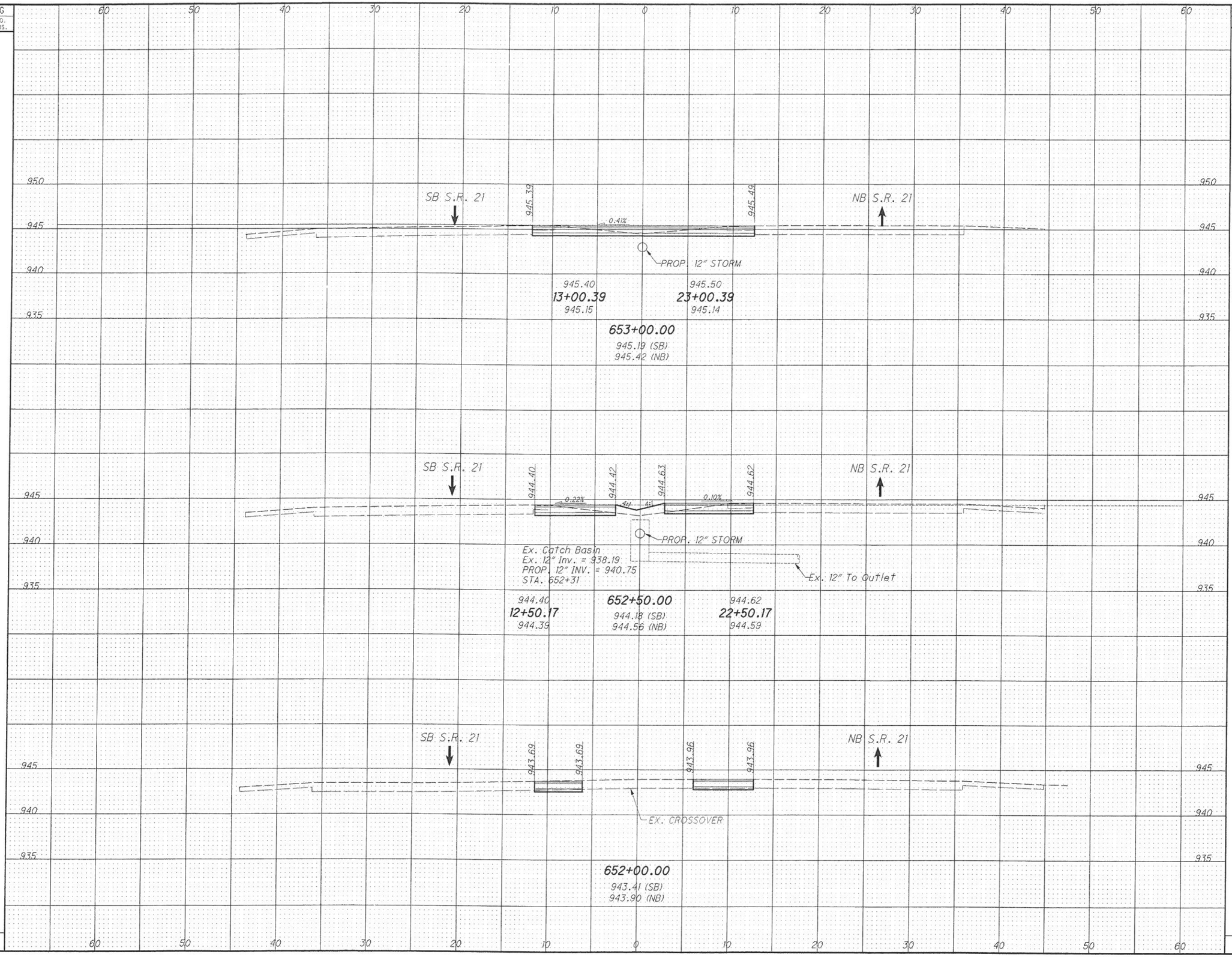

END AREA		VOLUME	
CUT	FILL	CUT	FILL
		32	0
17	0		
		27	7
12	4		
		24	7
14	0		
		83	14

CALCULATED BJE

CHECKED MAH

MAINTENANCE OF TRAFFIC CROSS SECTIONS - CROSSOVERS
STA. 652+00.00 TO STA. 653+00.00

STA-21-12.48

G:\CIVIL\2204054\R00\STA\25433\MOT\SHEETS\25433XS001.DGN
2/6/2027
9:39:46 AM
SWARRECCHIA

SEEDING	
END WIDTH	SQ. YDS.

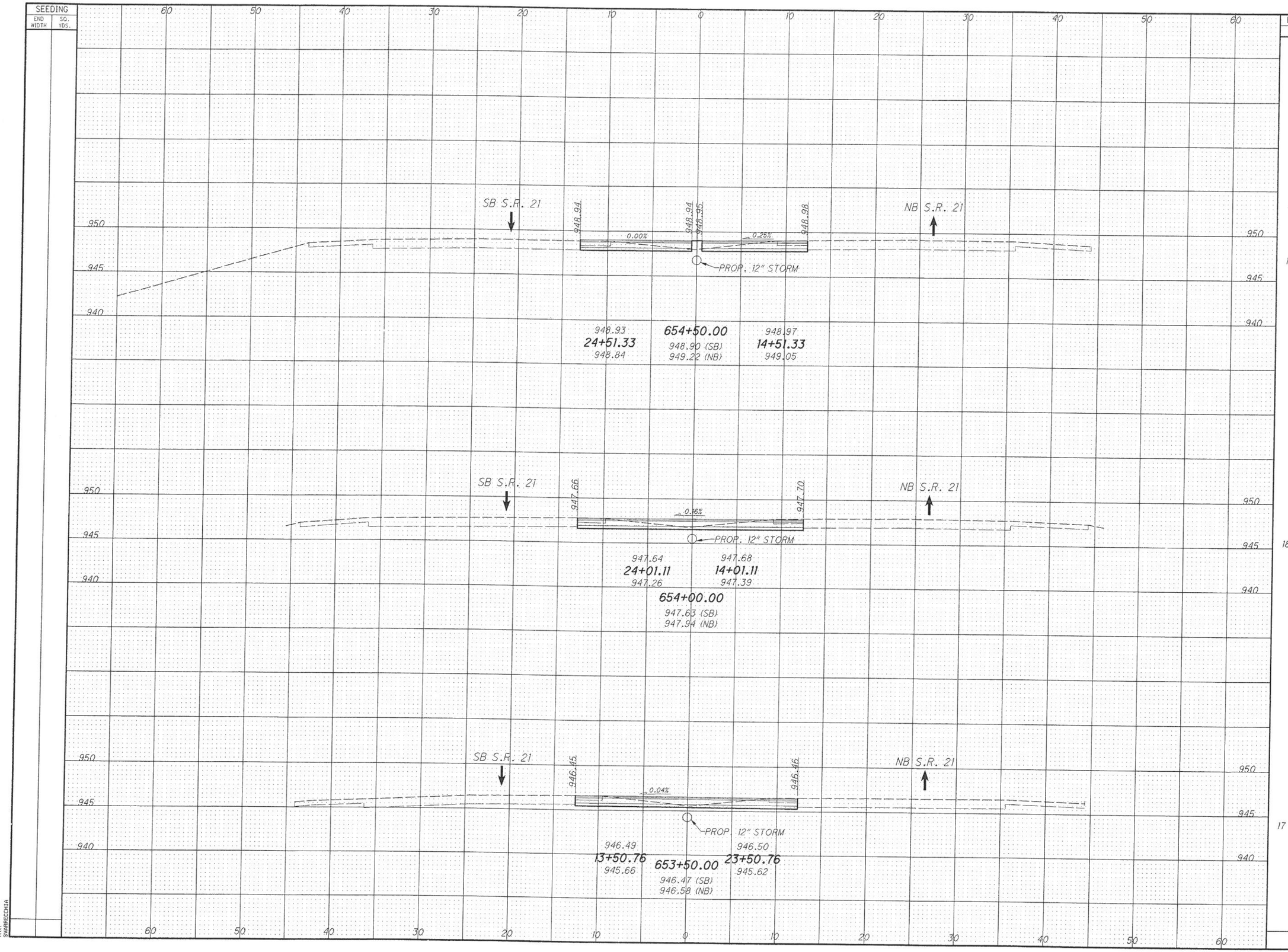

END AREA		VOLUME	
CUT	FILL	CUT	FILL
		28	3
16	1		
		32	0
18	0		
		32	0
17	0		
		92	3

CALCULATED BJE
CHECKED MAH

MAINTENANCE OF TRAFFIC CROSS SECTIONS - CROSSOVERS
STA. 653+50.00 TO STA. 654+50.00

STA-21-12.48

G:\CIVIL\2204894\00\STA\25433\MOT\SHEETS\25433XS001.DGN
2/6/2007
9:41:02 AM
SWARRECCHIA

SEEDING	
END WIDTH	SQ. YDS.

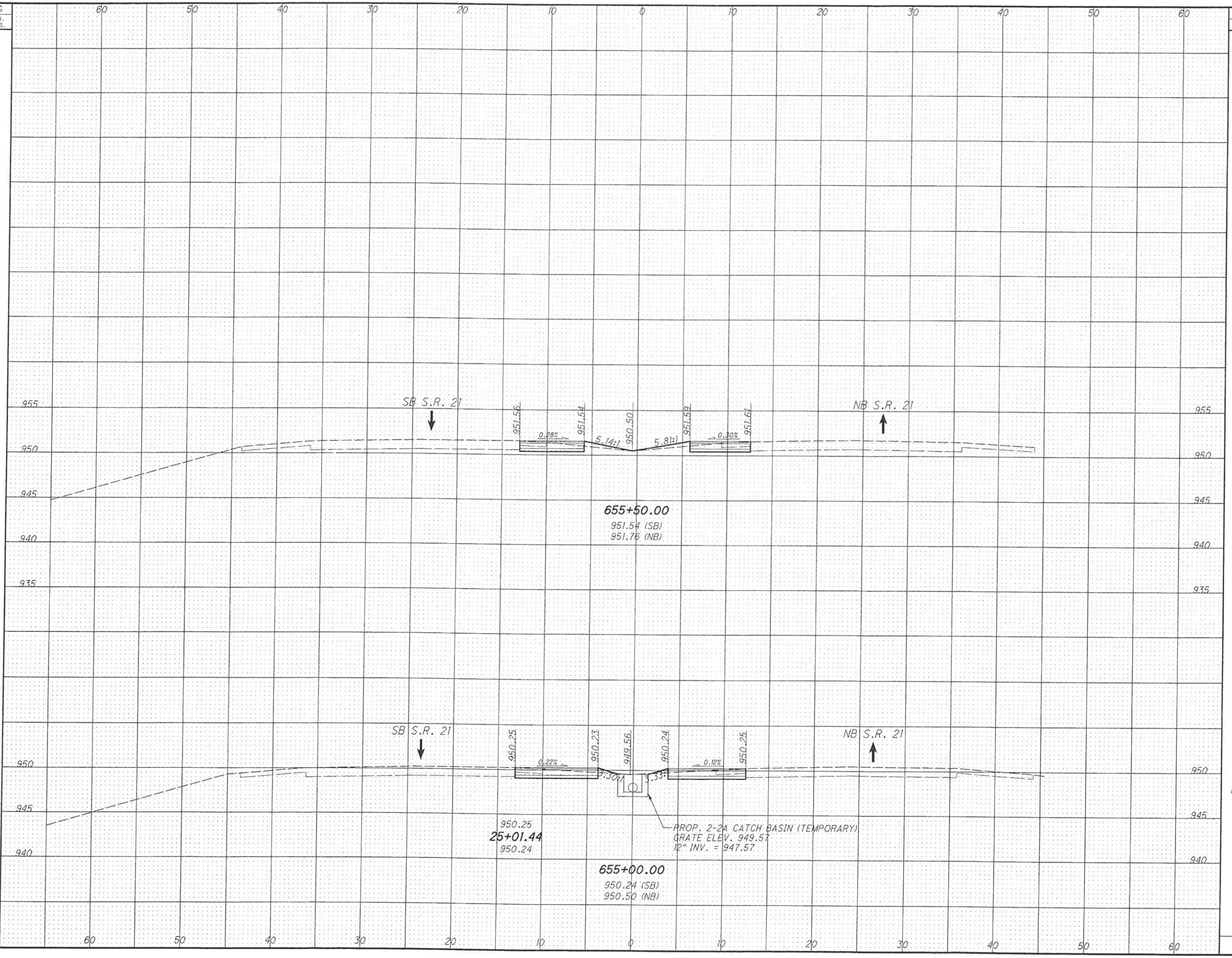

END AREA		VOLUME	
CUT	FILL	CUT	FILL
		18	4
10	3		
		22	5
14	2		
		40	9

CALCULATED BJE
CHECKED MAH

MAINTENANCE OF TRAFFIC CROSS SECTIONS - CROSSOVERS STA. 655+00.00 TO STA. 655+50.00

STA-21-12.48

G:\CIVIL\2004854\00\STA\25433XS001.DGN
2/6/2007
9:48:52 AM
SVARRECCHIA

SEEDING	
END WIDTH	SQ. YDS.

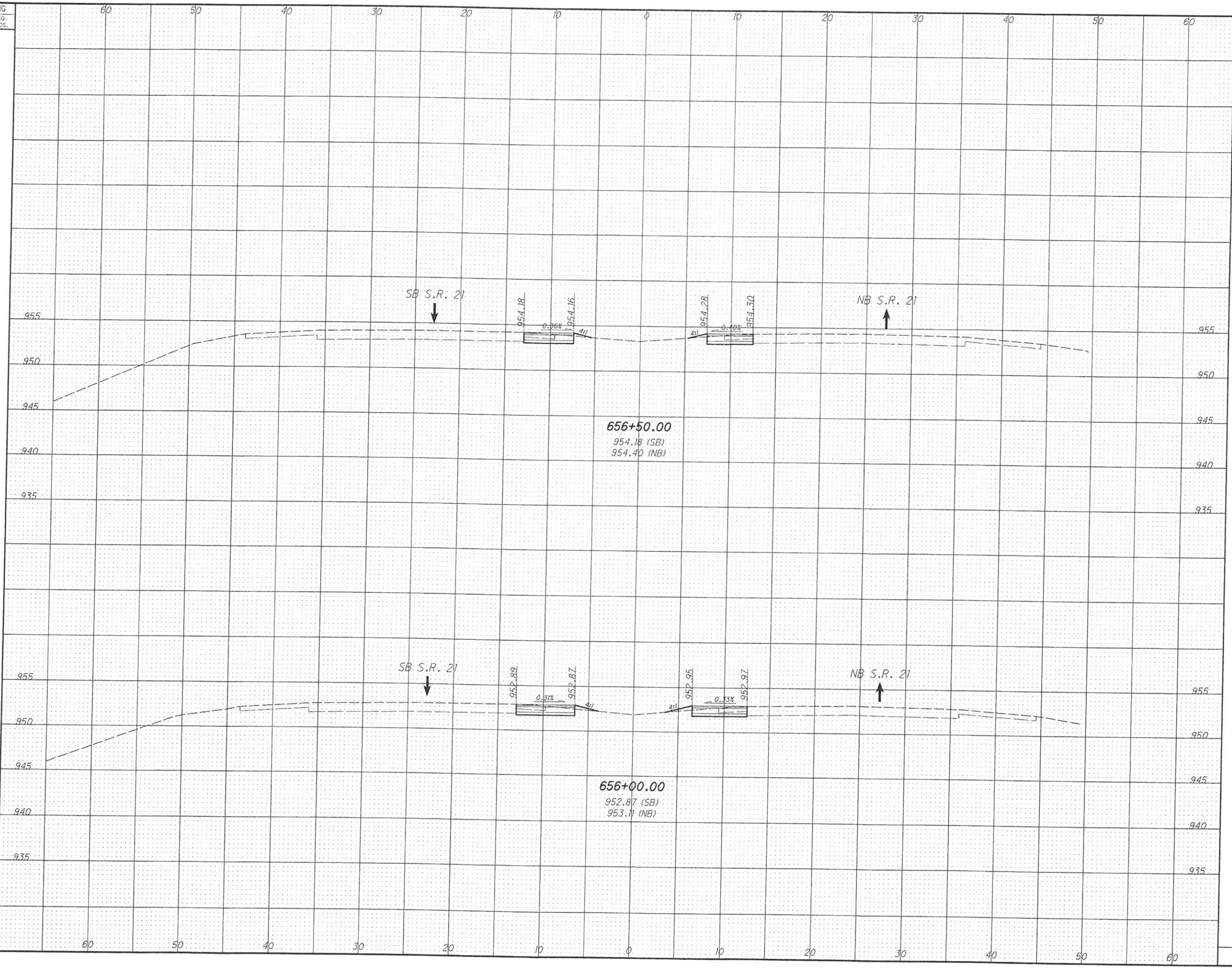

END AREA		VOLUME	
CUT	FILL	CUT	FILL
		12	2
7	1		
		15	2
9	1		
		27	4

CALCULATED BJE
CHECKED MAH

MAINTENANCE OF TRAFFIC CROSS SECTIONS - CROSSOVERS
STA. 656+00.00 TO STA. 656+50.00

STA-21-12.48

46
124

G:\CIVIL\2824854\#0\STA\25433\MOT\SHEETS\25433XS001.DGN
2/6/2007
9:48:35 AM
SVARRECCHIA

SEEDING	
END WIDTH	SQ. YDS.

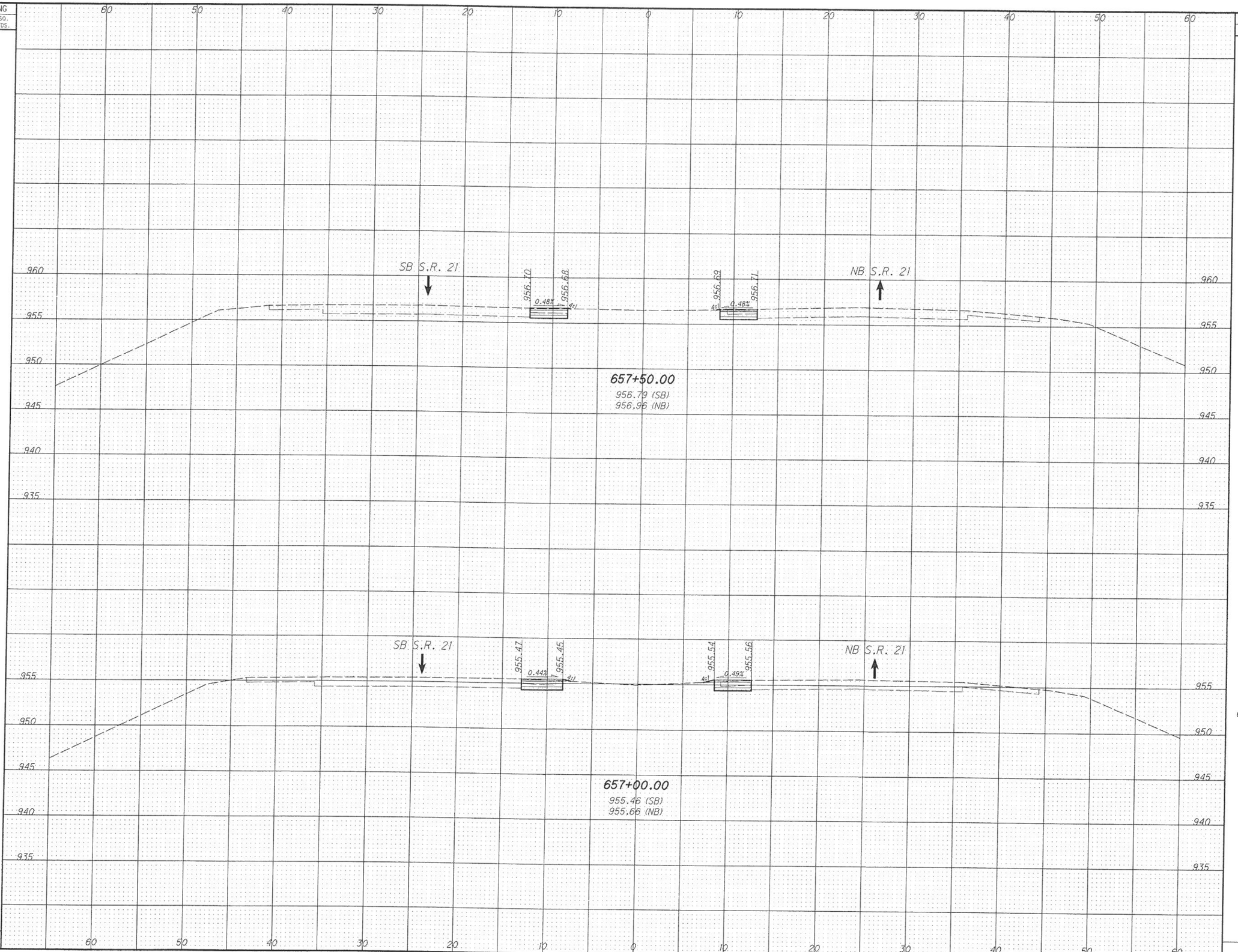

END AREA		VOLUME	
CUT	FILL	CUT	FILL
		8	1
6	1		
		11	2
6	1		
		19	3

CALCULATED BJE

CHECKED MAH

MAINTENANCE OF TRAFFIC CROSS SECTIONS - CROSSOVERS
STA. 657+00.00 TO STA. 657+50.00

STA-21-12.48

47
124

G:\C1V11\2004054\00\STA\25433\MOT\SHEETS\25433XS001.DGN
2/6/2007
9:41:53 AM
SHARECHIA

SEEDING	
END WIDTH	SQ. YDS.

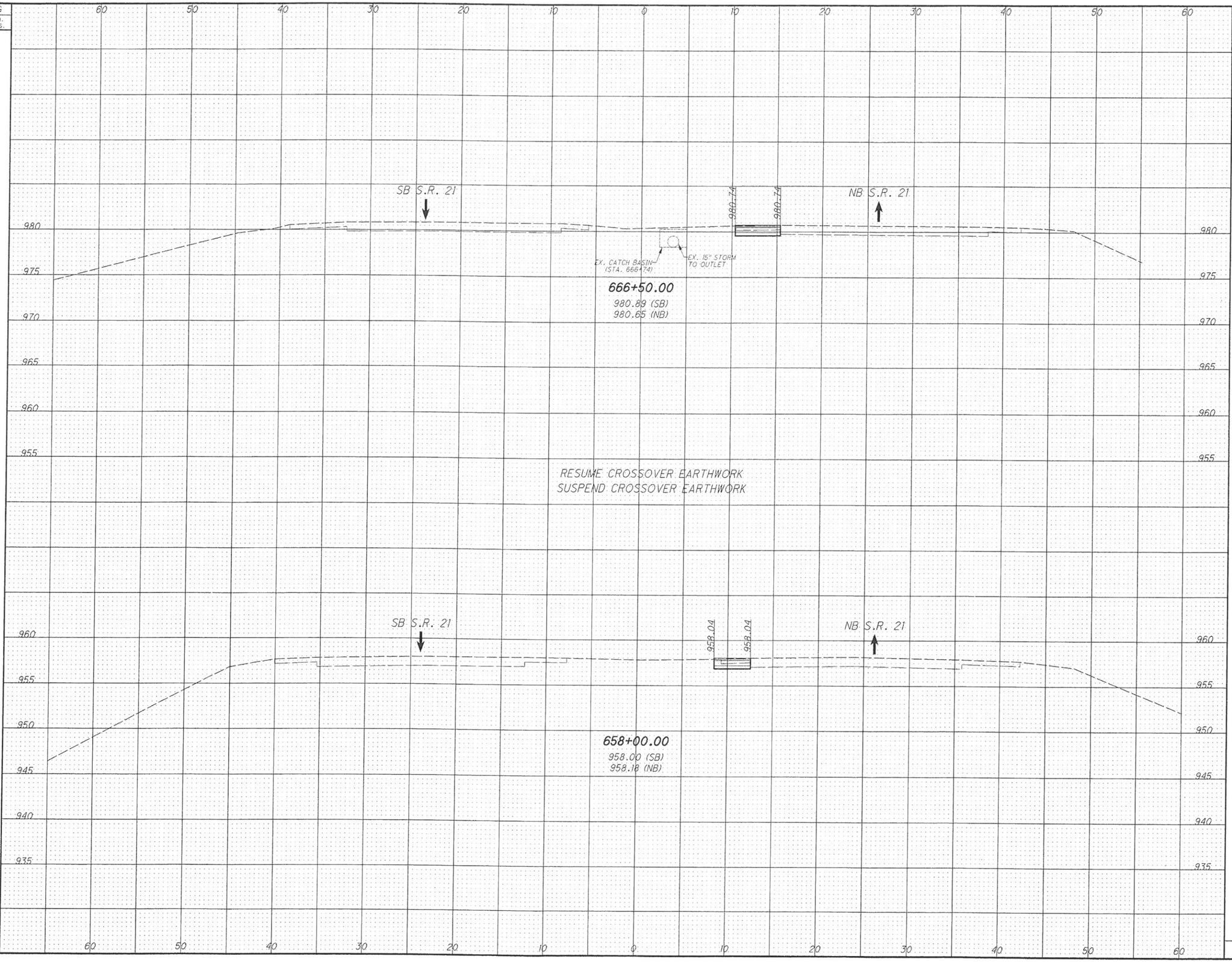

END AREA		VOLUME	
CUT	FILL	CUT	FILL
		8	1
3	0		
3	0		
		8	1

CALCULATED BJE
CHECKED MAH

MAINTENANCE OF TRAFFIC CROSS SECTIONS - CROSSOVERS
STA. 658+00.00 TO STA. 666+50.00

STA-21-12.48

D:\CIVIL\2004854\RDWY\STA\26433\MOT\SHEETS\26433XS001.DGN
2/6/2007
9:41:41 AM
SWARRECCH1a

SEEDING	
END WIDTH	SQ. YDS.

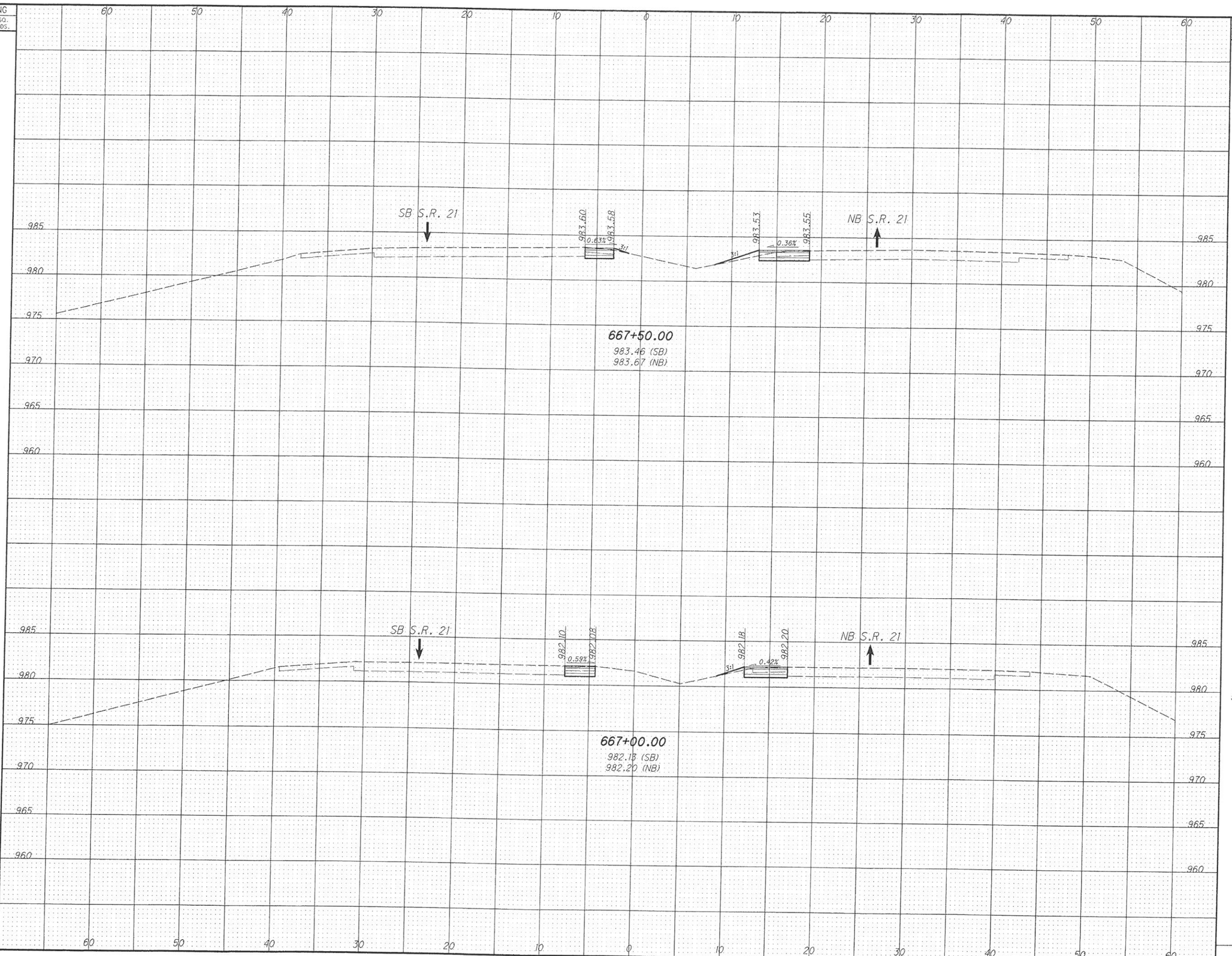

END AREA		VOLUME	
CUT	FILL	CUT	FILL
		10	6
5	2		
5	1		
		9	3
		19	9

CALCULATED BJE
CHECKED MAH

MAINTENANCE OF TRAFFIC CROSS SECTIONS - CROSSOVERS
STA. 667+00.00 TO STA. 667+50.00

STA-21-12.48

G:\CIVIL\2020054\00\STA\25433\MOT\SHEETS\25433XS001.DGN
2/6/2027
9:41:24 AM
SWARRECCHIA

SEEDING	
END WIDTH	SQ. YDS.

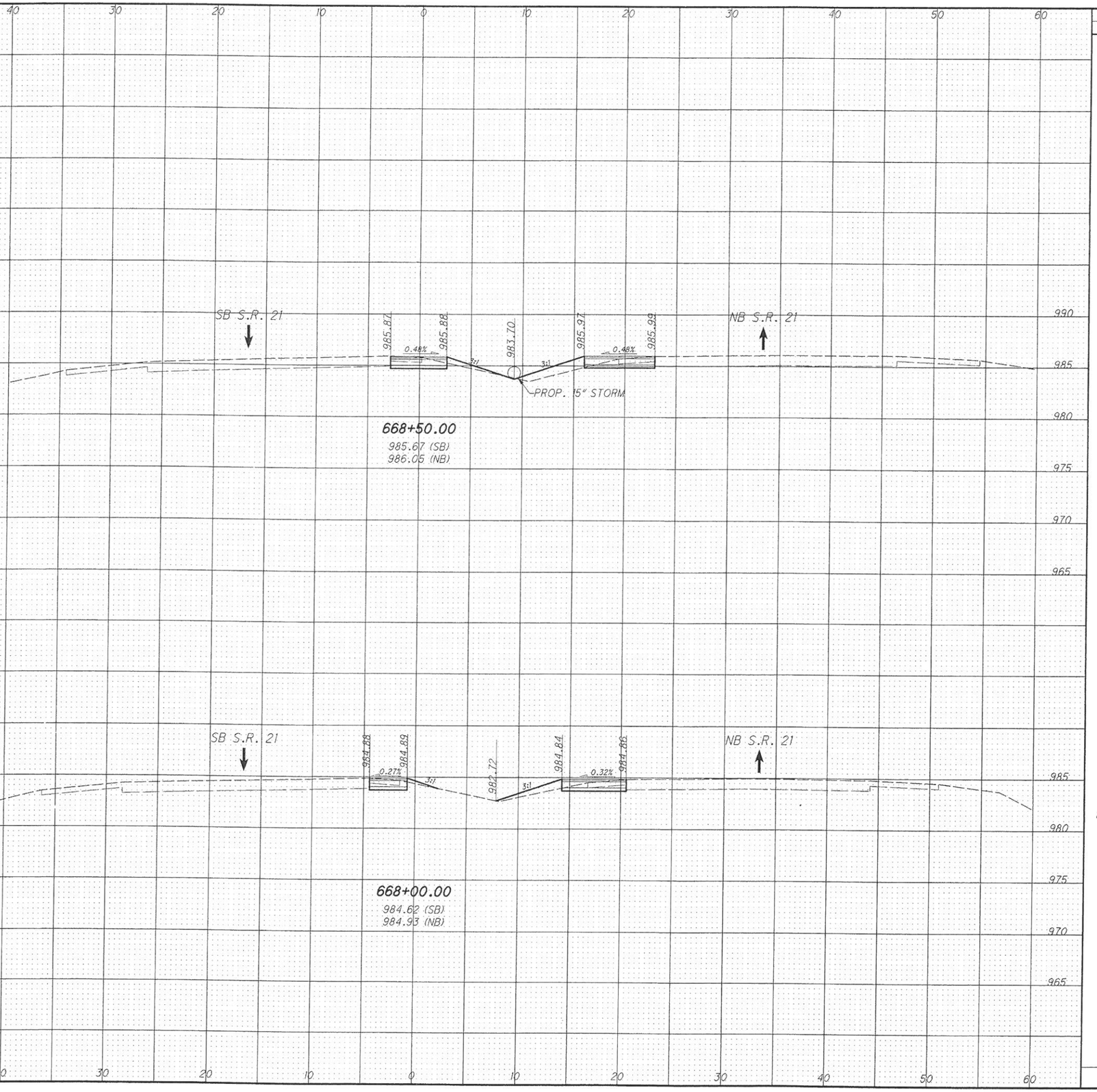

END AREA	
CUT	FILL
7	7
6	4

VOLUME	
CUT	FILL
15	17
12	10
27	27

CALCULATED BJE

CHECKED MAH

MAINTENANCE OF TRAFFIC CROSS SECTIONS - CROSSOVERS

STA. 668+00.00 TO STA. 668+50.00

STA-21-12.48

50
124

G:\CIVIL\2024054\020\STA\25433\MOT\SHEET\25433S001.DGN
2/6/2007
9:42:52 AM
SWARRECCHIA

SEEDING	
END WIDTH	SQ. YDS.

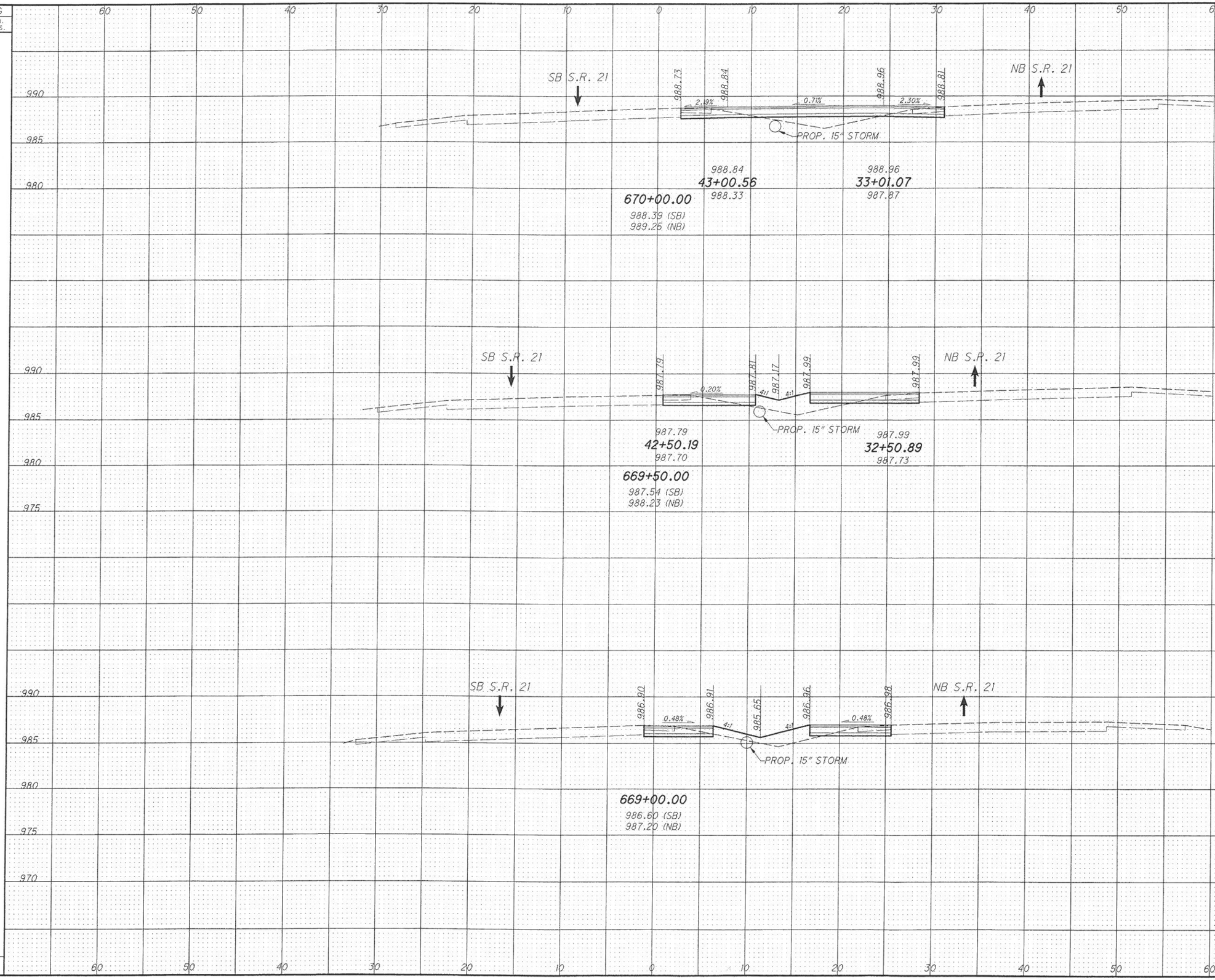

END AREA		VOLUME	
CUT	FILL	CUT	FILL
		10	21
7	9		
		14	19
8	12		
9	11	16	21
		40	61

CALCULATED BJE
CHECKED MAH

MAINTENANCE OF TRAFFIC CROSS SECTIONS - CROSSOVERS STA. 669+00.00 TO STA. 670+00.00

STA-21-12.48

G:\CIVIL\2004854\00\STA\25433\MOT\SHEETS\25433XS001.DGN
2/6/2007
9:42:30 AM
SVARRECCHIA

SEEDING	
END WIDTH	SQ. YDS.

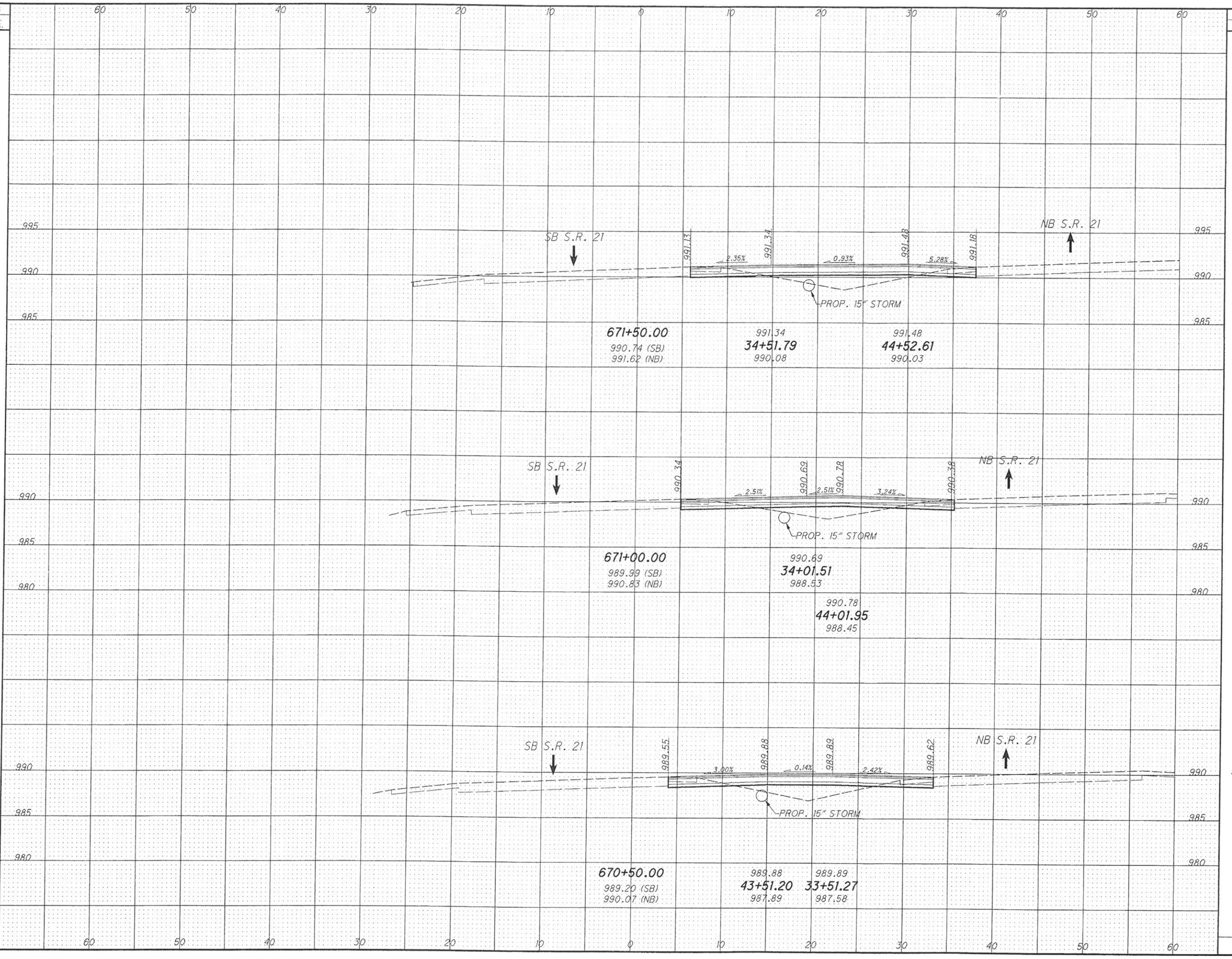

END AREA		VOLUME	
CUT	FILL	CUT	FILL
		14	30
5	15		
		7	26
3	13		
		7	25
4	14		
		28	81

CALCULATED BJE
CHECKED MAH

MAINTENANCE OF TRAFFIC CROSS SECTIONS - CROSSOVERS
STA. 670+50.00 TO STA. 671+50.00

STA-21-12.48

52
124

G:\CIVIL\2004B54\00\STA\25433\MOT\SHEETS\25433XS001.DGN
2/6/2007
9:42:13 AM
SVARRECCHIA

SEEDING	
END WIDTH	SQ. YDS.

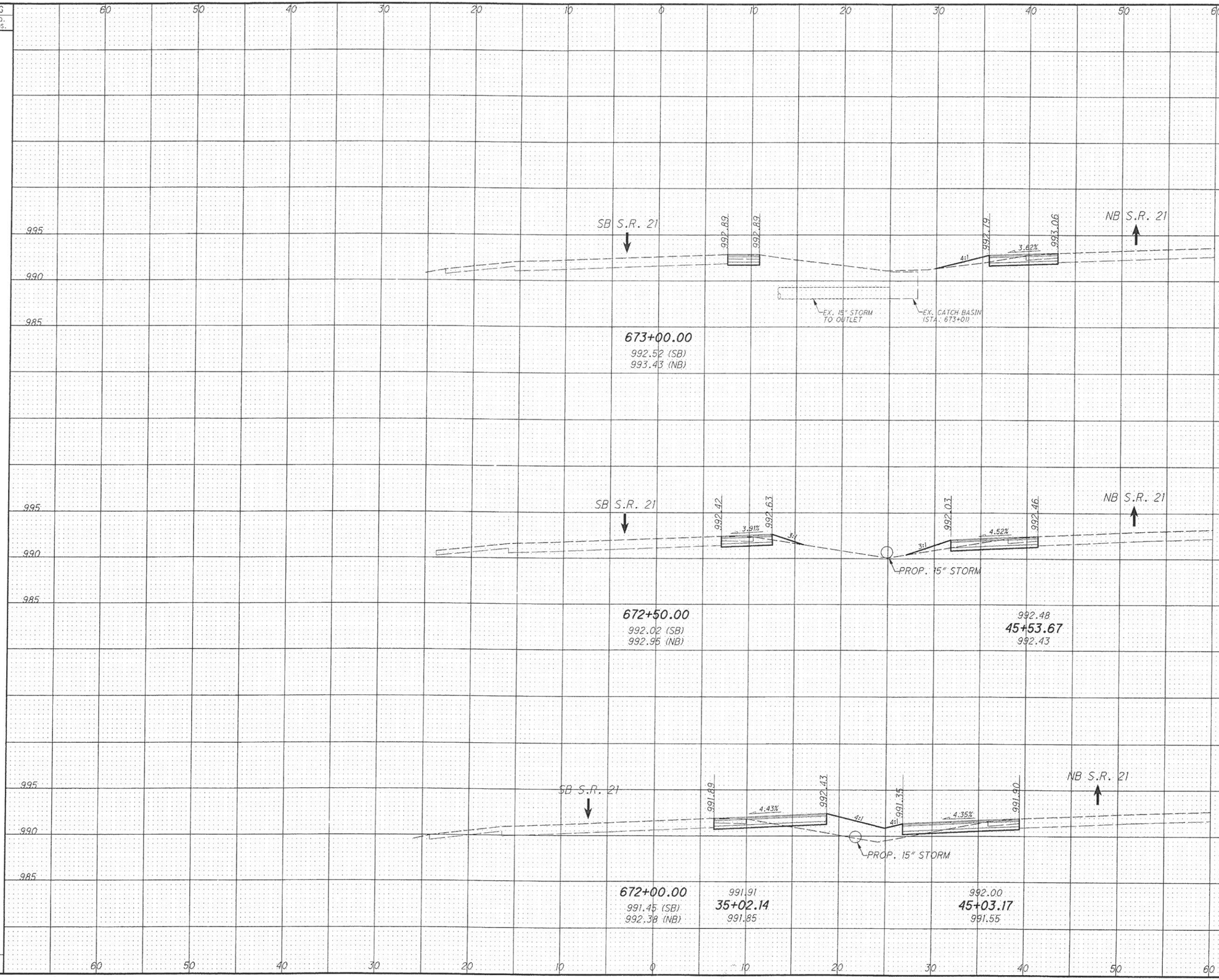

END AREA		VOLUME	
CUT	FILL	CUT	FILL
		10	3
7	2		
		16	5
10	3		
		19	19
10	17		
		45	27

CALCULATED BJE
CHECKED MAH

MAINTENANCE OF TRAFFIC CROSS SECTIONS - CROSSOVERS
STA. 672+00.00 TO STA. 673+00.00

STA-21-12.48

53
124

O:\CIVIL\20040540.00\STA\25433\MOT\SHEETS\25433S001.DGN
2/6/2007
9:43:25 AM
SWARRECCHIA

SEEDING	
END WIDTH	SQ. YDS.

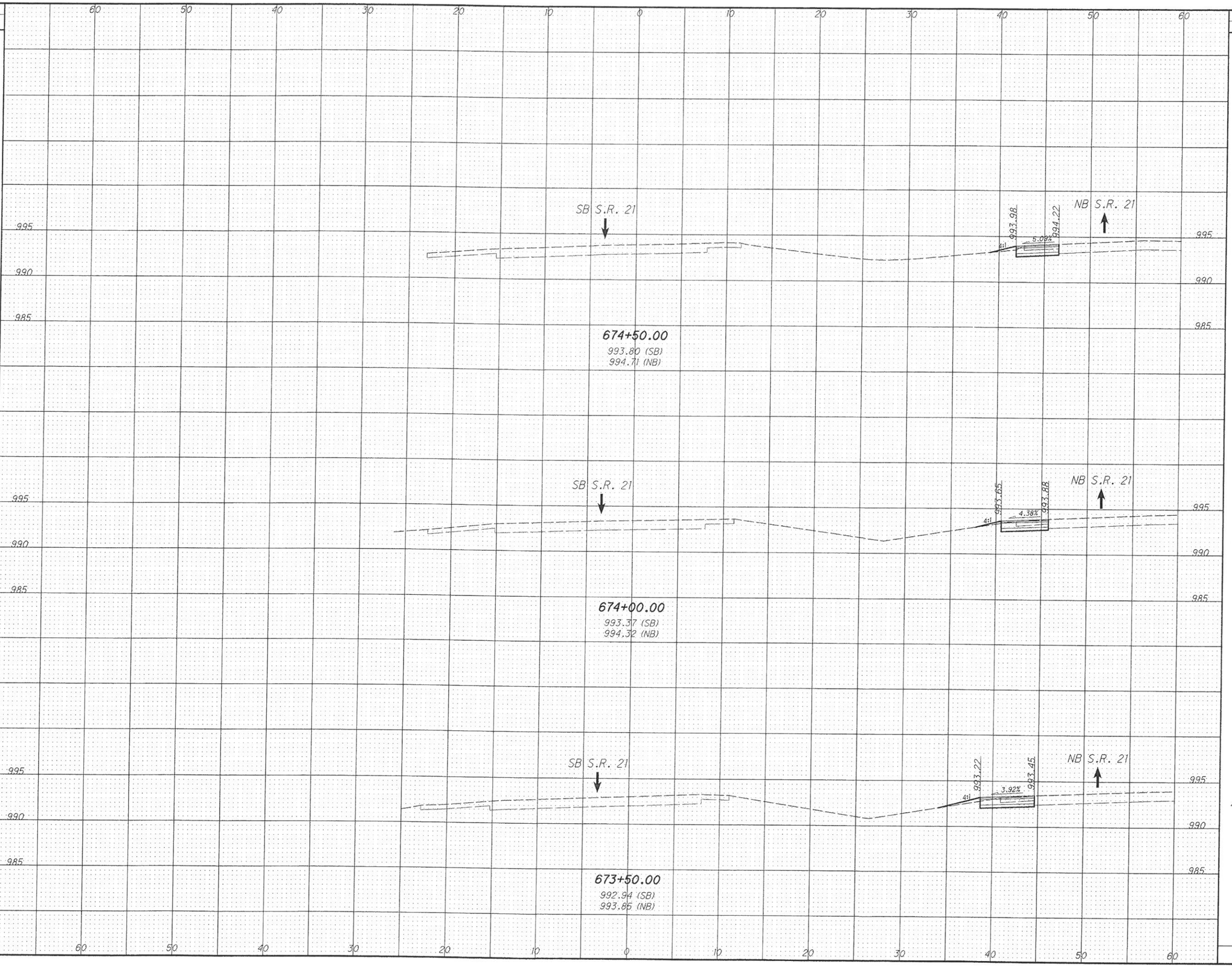

END AREA		VOLUME	
CUT	FILL	CUT	FILL
		6	2
3	1		
		7	2
4	1		
4	1		
		20	6

CALCULATED BJE
CHECKED MAH

TRAFFIC CROSS SECTIONS - CROSSOVERS
MAINTENANCE OF TRAFFIC STA. 673+50.00 TO STA. 674+50.00

STA-21-12.48

G:\CIVIL\2004054\RD\STA\25433\MOT\SHEETS\25433XS001.DGN
2/6/2007
9:43:15 AM
SWARBRECHIA

SEEDING	
END WIDTH	SQ. YDS.

60 50 40 30 20 10 0 10 20 30 40 50 60

995
990

SB S.R. 21

676+50.00
995.23 (SB)
996.13 (NB)

NB S.R. 21

995
990

SB S.R. 21

995.18
995.33
4.49%

NB S.R. 21

995
990

676+00.00
994.87 (SB)
995.82 (NB)

995
990
985

SB S.R. 21

994.91
995.05
3.89%

NB S.R. 21

995
990
985

675+50.00
994.49 (SB)
995.45 (NB)

995
990
985

SB S.R. 21

994.60
994.73
3.33%

NB S.R. 21

995
990
985

675+00.00
994.17 (SB)
995.03 (NB)

60 50 40 30 20 10 0 10 20 30 40 50 60

END AREA		VOLUME	
CUT	FILL	CUT	FILL
0	0		
		4	1
4	1		
		6	2
2	1		
		5	2
3	1		
		15	5

CALCULATED BJE
CHECKED MAH

MAINTENANCE OF TRAFFIC CROSS SECTIONS - CROSSOVERS STA. 675+00.00 TO STA. 676+50.00

STA-21-12.48

55
124

G:\CIVIL\2024054\00\STA\25433\MGT\SHEETS\25433XS001.DGN
2/6/2007
9:43:05 AM
SVARRECCHIA

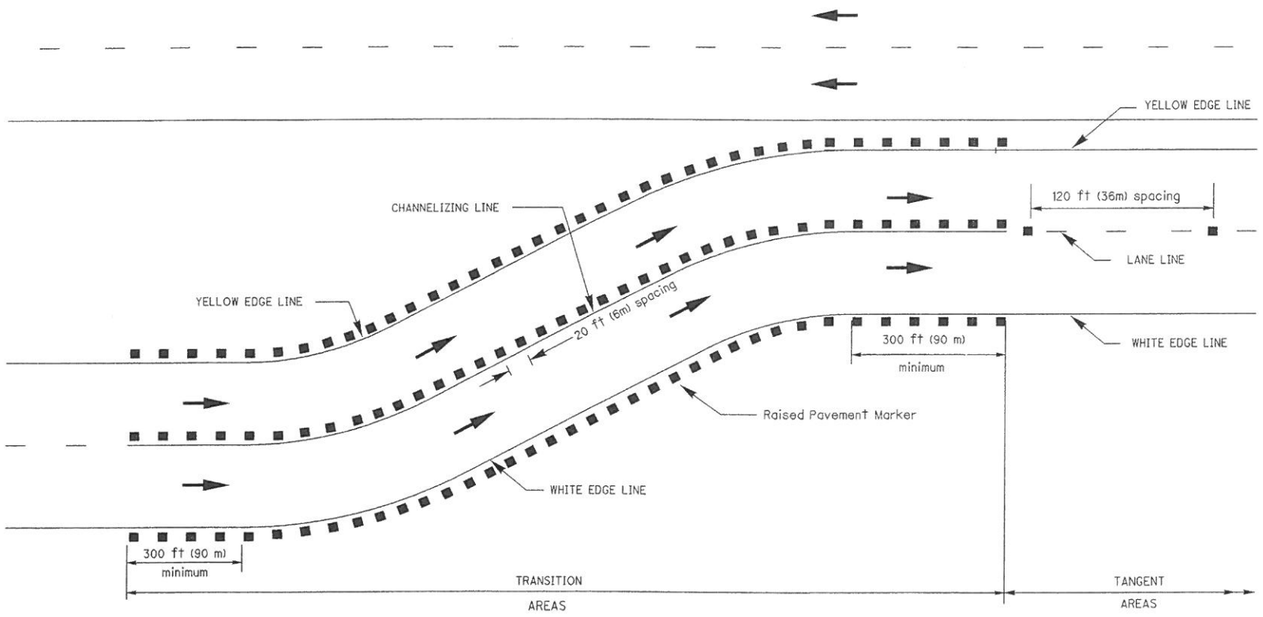

WORK ZONE DELINEATION FOR CROSSOVERS

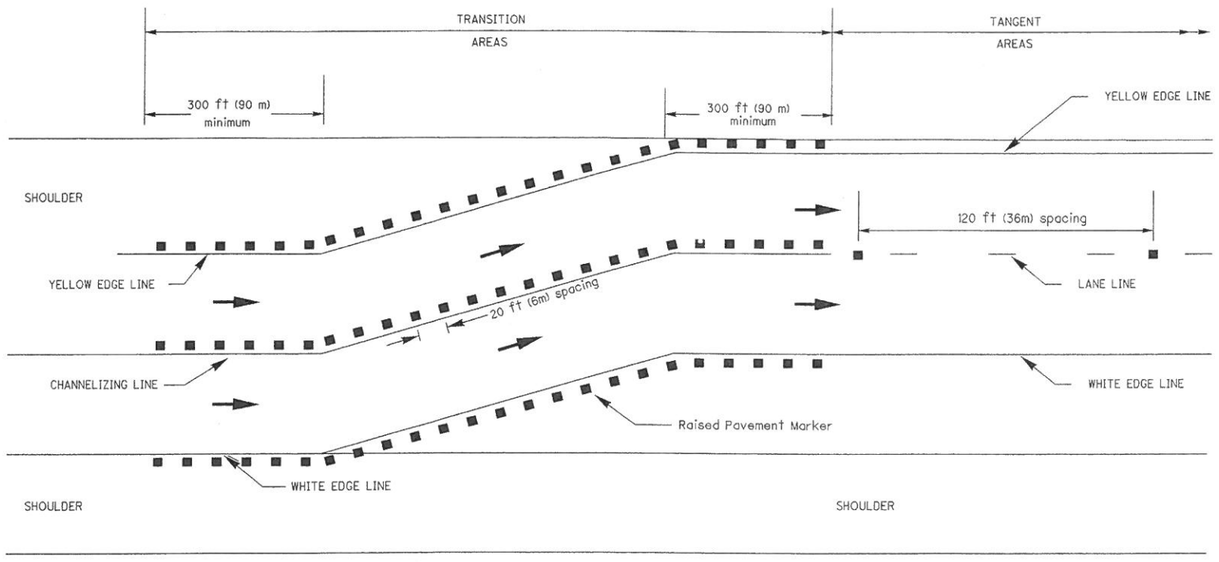

WORK ZONE DELINEATION FOR LANE SHIFTS

LEGEND

- RPM
- DIRECTION OF TRAVEL

NOTES

1. This drawing presents delineation procedures for freeways and expressways on asphalt surfaces. Procedures are provided for transition areas and for tangent areas. The procedures for transition areas apply to crossovers and to lane shifts of 4 feet (1.2 m) or greater. Delineation of transition areas for shifts of less than 4 inches (1.2 m) shall be as per the tangent area delineation.

2. Raised Pavement Markers shall meet the following seasonal specifications:
   a) Raised Pavement Markers in place during the normal construction season may be either 621 Raised Pavement Markers or 614 Work Zone Raised Pavement Markers (WZRPMs). The normal construction season with regard to use of WZRPMs shall be the period from April 1 through October 15.
   b) At locations where it is intended that Raised Pavement Markers will winter over, 621 Raised Pavement Markers shall be provided.
   c) At locations where it is intended that work will continue beyond October 15 but will be completed prior to the beginning of snow-plowing season, 614 WZRPMs may remain in place until such time. Snow-plowing season shall be as specified in the plans. If snow-plowing season is not specified in the plans, it shall be assumed that snow-plowing season runs from October 16 through March 31. If project delays, not the fault of ODOT, cause work to extend into the snow-plowing season, the contractor shall be responsible for replacing WZRPMs with 621 Raised Pavement Markers, as determined by the Engineer, at the contrator's expense.

3. All material furnished shall be listed on the Department's Prequalified Lists.

4. The geometrics of the crossover shall be as shown in the plans. Additional details are provided in Standard Construction Drawing MT-95.70.

5. See Standard Construction Drawings MT-102.10 and MT-102.20 for more details concerning lane shifts.

6. Spacing of raised pavement markers (RPMs) shall be at 20 feet (6 m) center-to-center for all long-line marking within transition areas. Within tangent areas RPMs shall be provided only along the lane lines, spaced at 120 foot (36 m) center-to-center.

7. The RPMs shall be 1-way, facing oncomming traffic, and shall be white or yellow to match the color of the associated line marking.

8. Along the edge lines, the RPMs shall be offset a maximum of 4 inches (100 mm) to the outside of the lines. Along the channelizing lines, the RPMs shall be offset to the left of the lines by no more than 1 inch (25 mm). Along the lane lines the RPMs shall be centered between dashes.

9. The RPMs shall be removed when they are no longer appropriate.

10. Holes resulting from removal of 621 RPMs shall be filled as per 202.10. If removal of the 621 RPMs does not take place immediately after the highlighted alignment becomes invalid, the reflectors within the 621 RPMs shall be removed.

11. Following removal of 621 RPMs resurfacing of the transition shall be performed. The resurfacing shall be performed at the time the surface course is being applied. In preparation for resurfacing, the existing pavement shall be removed to a depth necessary to match the level of the intermediate course of the proposed pavement.

WORK ZONE DELINEATION ON ASPHALT SURFACES

04-21-06

OFFICE OF TRAFFIC ENGINEERING

209930

1 / 1

SHB

CALCULATED

CHECKED

PLAN INSERT SHEET

STA-21-12.48

G:\CIVIL\2804854\K00\STA\25433\MOT\SHEETS\25433MN006.DGN
2/6/2007
9:43:55 AM
SWARRECCHIA

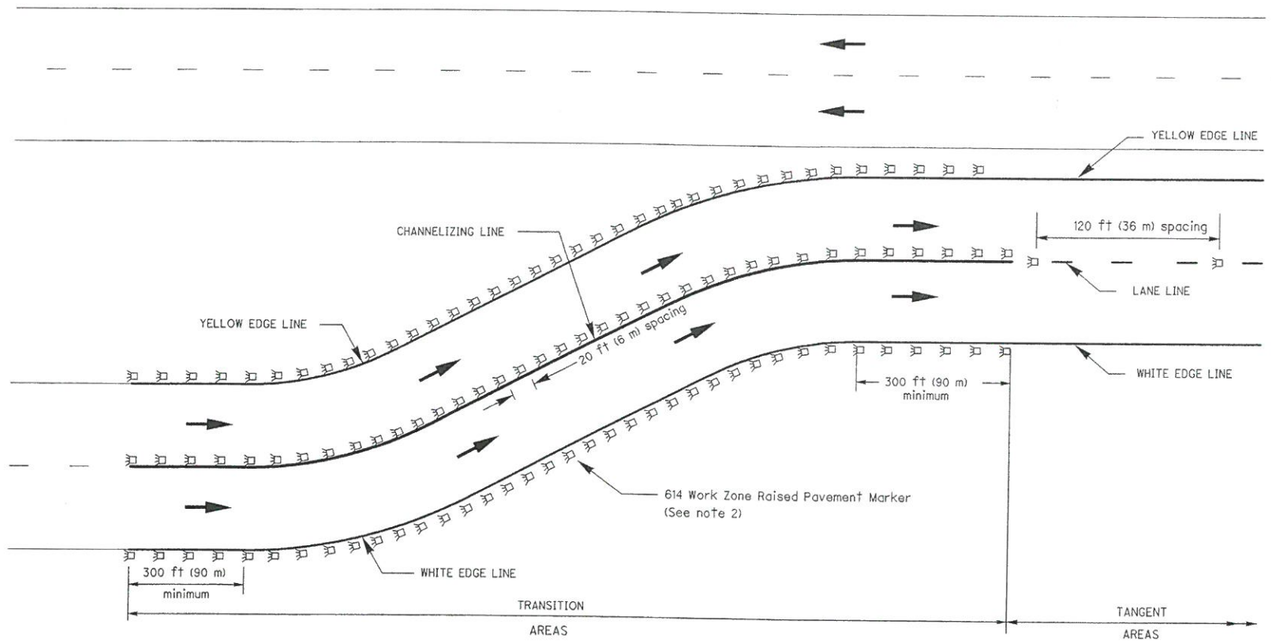

WORK ZONE DELINEATION FOR CROSSOVERS

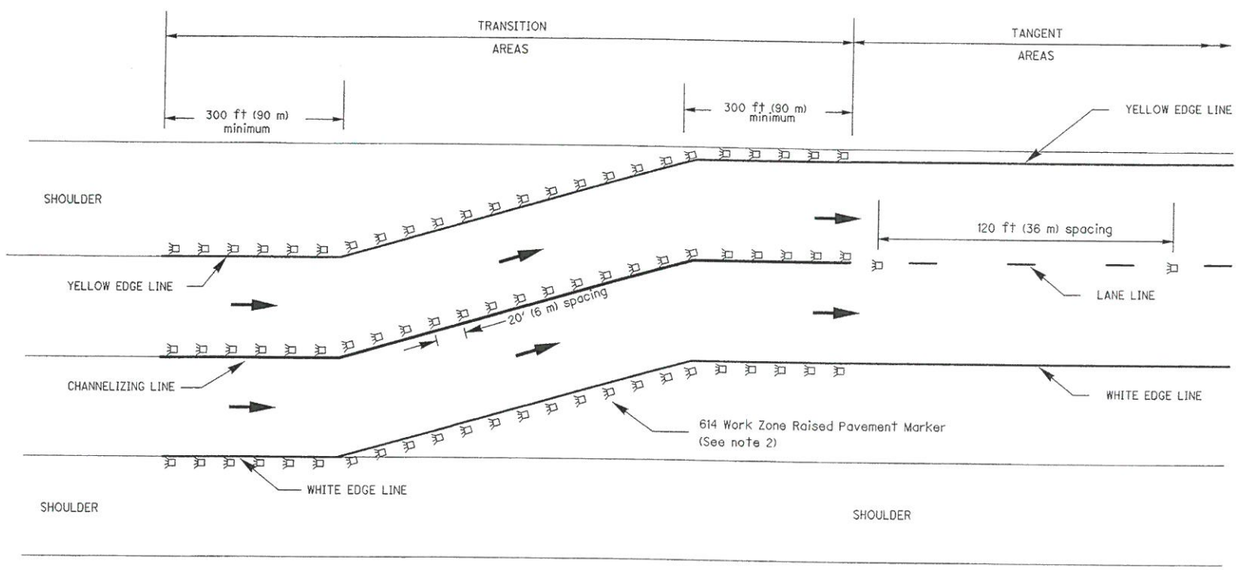

WORK ZONE DELINEATION FOR LANE SHIFTS

NOTES

1. This drawing presents delineation procedures for freeways and expressways on concrete surfaces. Procedures are provided for transition areas and for tangent areas. The procedures for transition areas apply to crossovers and to lane shifts of 4 feet (1.2 m) or greater. Delineation of transition areas for shifts of less than 4 feet (1.2 m) shall be as per the tangent area delineation.
2. The Work Zone Raised Pavement Markers (WZRPMs) shown on this drawing are intended for use only during the non-snow-plowing season. WZRPMs shall not be provided during the snow-plowing season. The snow-plowing season shall be from October 16 through March 31 or as otherwise specified in the plans. Where a temporary alignment will remain in use through the winter, the WZRPMs shall be removed prior the beginning of snow-plowing season and replaced approximately April 1, or as otherwise determined by the Engineer.
3. All material furnished shall be listed on the Department's Qualified Products Lists.
4. The geometrics of the crossover shall be as shown in the plans. Additional details are provided in Standard Construction Drawing MT-95.70.
5. See Standard Construction Drawings MT-102.10 and MT-102.20 for more details concerning lane shifts.
6. Spacing of WZRPMs shall be at 20 feet (6 m) center-to-center for all long-line marking within transition areas. Within tangent areas WZRPMs shall be provided only along the lane lines, spaced at 120 feet (36 m) center-to-center.
7. The WZRPMs shall be 1-way, facing oncoming traffic, and shall be white or yellow to match the color of the associated line marking.
8. Along the edge lines, the WZRPMs shall be offset a maximum of 4 inches (100 mm) to the outside of the lines. Along the channelizing lines, the WZRPMs shall be offset to the left of the lines by no more than 1 inch (25 mm). Along the lane lines the WZRPMs shall be centered between dashes.
9. The WZRPMs shall be removed when they are no longer appropriate.

LEGEND

- WORK ZONE RPM, TYPE A
- DIRECTION OF TRAVEL

WORK ZONE DELINEATION ON CONCRETE SURFACES

4-21-06

OFFICE OF TRAFFIC ENGINEERING

209931

1 / 1

SHB

CALCULATED

CHECKED

PLAN INSERT SHEET

STA-21-12.48

57
124

G:\CIVIL\2004854\08\STA\25433\MOT\SHEETS\25433MN007.DGN
2/6/2007
9:44:21 AM
SYARRECCHIA

SHEET NUMBER														ITEM	ITEM EXT.	GRAND TOTAL	UNIT	DESCRIPTION	SEE SHEET NO.
OFFICE CALC.					4	5	60		62	63	64	65	66						
																		ROADWAY	
														201	11000	LUMP		CLEARING AND GRUBBING	
582														202	23001	582	SQ YD	PAVEMENT REMOVED, AS PER PLAN	4
									360					202	32000	360	FT	CURB REMOVED	
										449		473		202	38000	922	FT	GUARDRAIL REMOVED	
							2276							203	10000	2276	CU YD	EXCAVATION	
							391							203	20000	391	CU YD	EMBANKMENT	
6581														204	10000	6581	SQ YD	SUBGRADE COMPACTION	
					3									204	45000	3	HOUR	PROOF ROLLING	
						0.11								209	60501	0.11	MILE	LINEAR GRADING, AS PER PLAN	5
						839								251	01000	839	SQ YD	PARTIAL DEPTH PAVEMENT REPAIR	
											76	76		SPECIAL	45130000	152	FT	PRESSURE RELIEF JOINT, TYPE A	
														604	38501	1	EACH	MONUMENT ASSEMBLY, AS PER PLAN	5
										331.25		331.25		606	13000	662.50	FT	GUARDRAIL, TYPE 5	
										100		100		606	15500	200	FT	GUARDRAIL, BARRIER DESIGN, TYPE 5	
										2		2		606	35000	4	EACH	BRIDGE TERMINAL ASSEMBLY, TYPE 1	
										1		1		606	35100	2	EACH	BRIDGE TERMINAL ASSEMBLY, TYPE 2	
										1			1	606	60010	2	EACH	IMPACT ATTENUATOR, TYPE 1-98 (BIDIRECTIONAL)	
																		EROSION CONTROL	
											2			601	11000	2	SQ YD	RIP RAP USING 6" REINFORCED CONCRETE SLAB	
											608			601	32004	608	CU YD	ROCK CHANNEL PROTECTION, TYPE A WITH FABRIC FILTER	
											3			601	32204	3	CU YD	ROCK CHANNEL PROTECTION, TYPE C WITH FABRIC FILTER	
							1814							659	10000	1814	SQ YD	SEEDING AND MULCHING	
					91									659	14000	91	SQ YD	REPAIR SEEDING AND MULCHING	
					91									659	15000	91	SQ YD	INTER-SEEDING	
					0.33									659	20000	0.33	TON	COMMERCIAL FERTILIZER	
					0.38									659	31000	0.38	ACRE	LIME	
					10									659	35000	10	M GAL	WATER	
					4									659	40000	4	M SQ FT	MOWING	
														832	15000	LUMP		STORM WATER POLLUTION PREVENTION PLAN	
														832	30000	23000	EACH	EROSION CONTROL	
																		DRAINAGE	
											0.42			602	20000	0.42	CU YD	CONCRETE MASONRY	
										20	50	52		603	00510	122	FT	6" CONDUIT, TYPE F, FOR UNDERDRAIN OULETS	
									38		100			603	04400	138	FT	12" CONDUIT, TYPE B	
											20			603	04900	20	FT	12" CONDUIT, TYPE D, 707.21 OR 707.22	
											143			603	05200	143	FT	12" CONDUIT, TYPE F, 707.21 OR 707.22	
											4			604	00800	4	EACH	CATCH BASIN, NO. 3A	
									1		1			604	04500	2	EACH	CATCH BASIN, NO. 2-2B	
												2		604	36600	2	EACH	PRECAST REINFORCED CONCRETE OUTLET	
										13	126	90		605	11100	233	FT	6" SHALLOW PIPE UNDERDRAINS, ITEM 707.32 TYPE CP, OR 707.41	
										25	63	232		605	13300	320	FT	6" UNCLASSIFIED PIPE UNDERDRAINS, 707.41	

CALCULATED CLP
CHECKED RWE

GENERAL SUMMARY

STA-21-12.48

H:\Projects\2006\2006-0007 STA-21-12.48 Part 2\Civil\Drawings\Front-End Sheets\25433GG001.dgn
2/12/2007 11:47:22 PM
25433GG001.dgn

SHEET NUMBER														ITEM	ITEM EXT.	GRAND TOTAL	UNIT	DESCRIPTION	SEE SHEET NO.
OFFICE CALC.						5				63	64								
																		PAVEMENT	
8389														254	01000	8389	SQ YD	PAVEMENT PLANING, ASPHALT CONCRETE	
974						1								301	46000	975	CU YD	ASPHALT CONCRETE BASE, PG64-22	
						142								304	20000	142	CU YD	AGGREGATE BASE	
881						2								304	20001	883	CU YD	AGGREGATE BASE, AS PER PLAN	5
528						1								305	13000	529	SQ YD	9" CONCRETE BASE	
631						1								407	10000	632	GALLON	TACK COAT	
357														407	14000	357	GALLON	TACK COAT FOR INTERMEDIATE COURSE	
1756														408	10000	1756	GALLON	PRIME COAT	
						596								408	10001	596	GALLON	PRIME COAT, AS PER PLAN	5
						1								411	10000	1	CU YD	STABILIZED CRUSHED AGGREGATE	
371						1								442	10001	372	CU YD	ASPHALT CONCRETE SURFACE COURSE, 12.5 MM, TYPE A (446), AS PER PLAN	5
494						1								442	10150	495	CU YD	ASPHALT CONCRETE INTERMEDIATE COURSE, 19MM, TYPE B (446)	
28						1								442	20250	29	CU YD	ASPHALT CONCRETE INTERMEDIATE COURSE, 19MM, TYPE B (448)	
						31								448	46061	31	CU YD	ASPHALT CONCRETE INTERMEDIATE COURSE, TYPE 1, UNDER GUARDRAIL, PG64-22, AS PER PLAN	5
										35	112			609	16000	147	FT	CURB, TYPE 2-B	
						77								617	10101	77	CU YD	COMPACTED AGGREGATE, AS PER PLAN	5
																		MAINTENANCE OF TRAFFIC GENERAL SUMMARY	13
																		TRAFFIC CONTROL GENERAL SUMMARY	81
																		STRUCTURE STA-21-1248 L&R GENERAL SUMMARY	97
														SPECIAL	10810000	LUMP		CPM PROGRESS SCHEDULE	
														614	11000	LUMP		MAINTAINING TRAFFIC	
														619	16020	24	MONTH	FIELD OFFICE TYPE C	
														623	10000	LUMP		CONSTRUCTION LAYOUT STAKES	
														624	10000	LUMP		MOBILIZATION	

CALCULATED CLP
CHECKED RWE

GENERAL SUMMARY

STA-21-12,48

H:\Projects\2006\2006-0007 STA 21-12_48 Part 2\Civil\Drawings\Front-End Sheets\25433GC002.dgn
8/21/2007 10:50:28 AM
25433GC002.dgn

PROJECT DESCRIPTION

IMPROVEMENT OF 0.17 OF A MILE OF STATE ROUTE 21 BY MAJOR REHABILITATION OF TWIN STRUCTURES, BRIDGE NOS. : STA-21-12.48 LEFT AND RIGHT, OVER TUSCARAWAS RIVER, R.J. CORMAN RAILROAD, AND T.R. 353, INCLUDING DECK, PIER CAP AND APPROACH SLAB REPLACEMENTS AND RECONSTRUCTION OF APPROACH ROADWAY.

USGS QUADRANT NO. 40081-G5-TF-024.
MASSILLON, OH

LONGITUDE: 81°31'50" W*
LATITUDE: 40°49'00" N*

* LONGITUDE AND LATITUDE TO APPROXIMATE CENTER OF PROJECT.

LEGEND

- PROPOSED CATCH BASIN, CB-3A
- PROPOSED CATCH BASIN, CB-2-2A
- HALF-HEIGHT HEADWALL, HW-2.1
- EXISTING CATCH BASIN

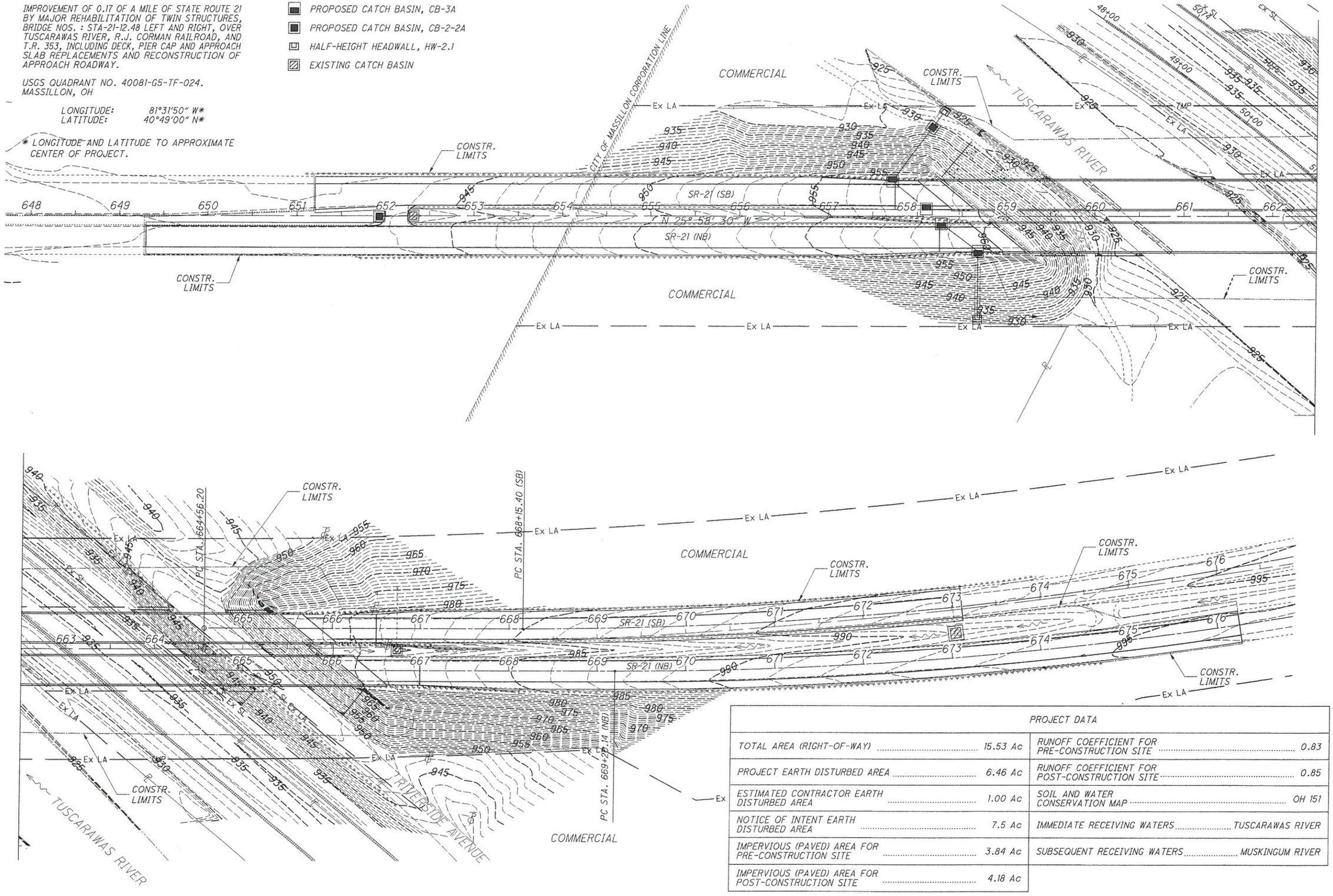

PROJECT DATA			
TOTAL AREA (RIGHT-OF-WAY)	15.53 Ac	RUNOFF COEFFICIENT FOR PRE-CONSTRUCTION SITE	0.83
PROJECT EARTH DISTURBED AREA	6.46 Ac	RUNOFF COEFFICIENT FOR POST-CONSTRUCTION SITE	0.85
ESTIMATED CONTRACTOR EARTH DISTURBED AREA	1.00 Ac	SOIL AND WATER CONSERVATION MAP	OH 151
NOTICE OF INTENT EARTH DISTURBED AREA	7.5 Ac	IMMEDIATE RECEIVING WATERS	TUSCARAWAS RIVER
IMPERVIOUS (PAVED) AREA FOR PRE-CONSTRUCTION SITE	3.84 Ac	SUBSEQUENT RECEIVING WATERS	MUSKINGUM RIVER
IMPERVIOUS (PAVED) AREA FOR POST-CONSTRUCTION SITE	4.18 Ac		

HORIZONTAL SCALE IN FEET
0 25 50 100

CALCULATED CLP
CHECKED RWE

PROJECT SITE PLAN

STA-21-12.48

2/12/2007 1:47:16 PM

H:\Projects\2006\2006-0007 STA-21-12.48 Part 2\Civil\Drawings\Drainage\25433DE001.dgn
25433DE001.dgn

EARTHWORK SUMMARY			
STATION TO STATION	203 EXCAVATION	203 EMBANKMENT	659 SEEDING AND MULCHING
	CU YD	CU YD	SQ YD
648+00 TO 649+30	0	0	0
649+50 TO 651+00	93	0	0
651+20 TO 652+50	226	0	88
653+00 TO 655+00	280	0	0
655+50 TO 657+00	224	0	0
657+50 TO 658+25	190	0	92
658+77.49 TO 666+43.61	209	0	0
666+50 TO 668+00	298	52	273
668+50 TO 670+50	280	115	511
671+00 TO 672+50	224	116	511
673+00 TO 675+00	182	86	203
675+50 TO 676+50	70	22	136
TOTALS CARRIED TO GEN. SUM.	2276	391	1814

CALCULATED CLP
CHECKED SAN

EARTHWORK SUMMARY

STA-21-12.48

H:\Projects\2006\2006-0007 STA-21-12.48 Part 2\Civil\Drawings\Front-End Sheets\25433G000I.dgn 2/12/2007 1:47:12 PM
25433G000I.dgn

H:\Projects\2006\2006-0007 STA-21-12_48 Part 2\Civil\Drawings\Plan and Profile\25433GP001.dgn 2/12/2007 2:29:16 PM

25433GP001.dgn

LEGEND

AC = ACRE
BM = BENCHMARK
CB = CATCH BASIN
CONSTR. = CONSTRUCTION
ELEV. = ELEVATION
EX. = EXISTING
HW = HIGH WATER
INV. = INVERT
MON. = MONUMENT
NB = NORTHBOUND
NBL = NORTHBOUND LANES
POT = POINT ON TANGENT
RCP = ROCK CHANNEL PROTECTION
SB = SOUTHBOUND
SBL = SOUTHBOUND LANES
SCD = STANDARD CONSTRUCTION DRAWING
STA = STATION
TC = TOP OF CASTING

CROSS REFERENCES	
SHEET	DESCRIPTION
9/124	℄ CONTROL AND REFERENCES

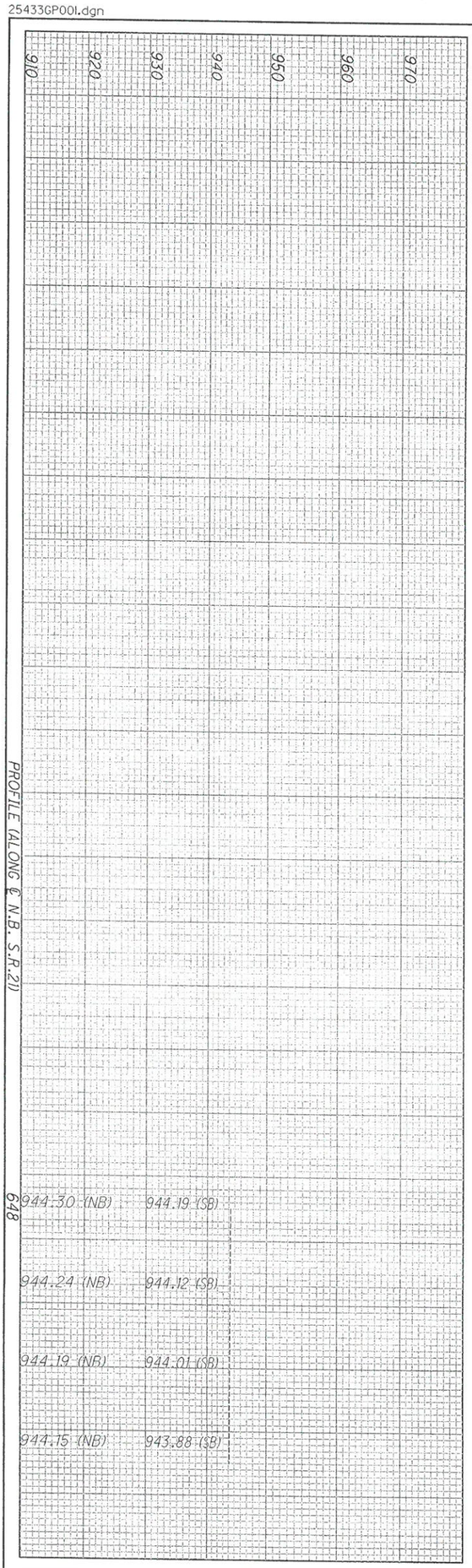

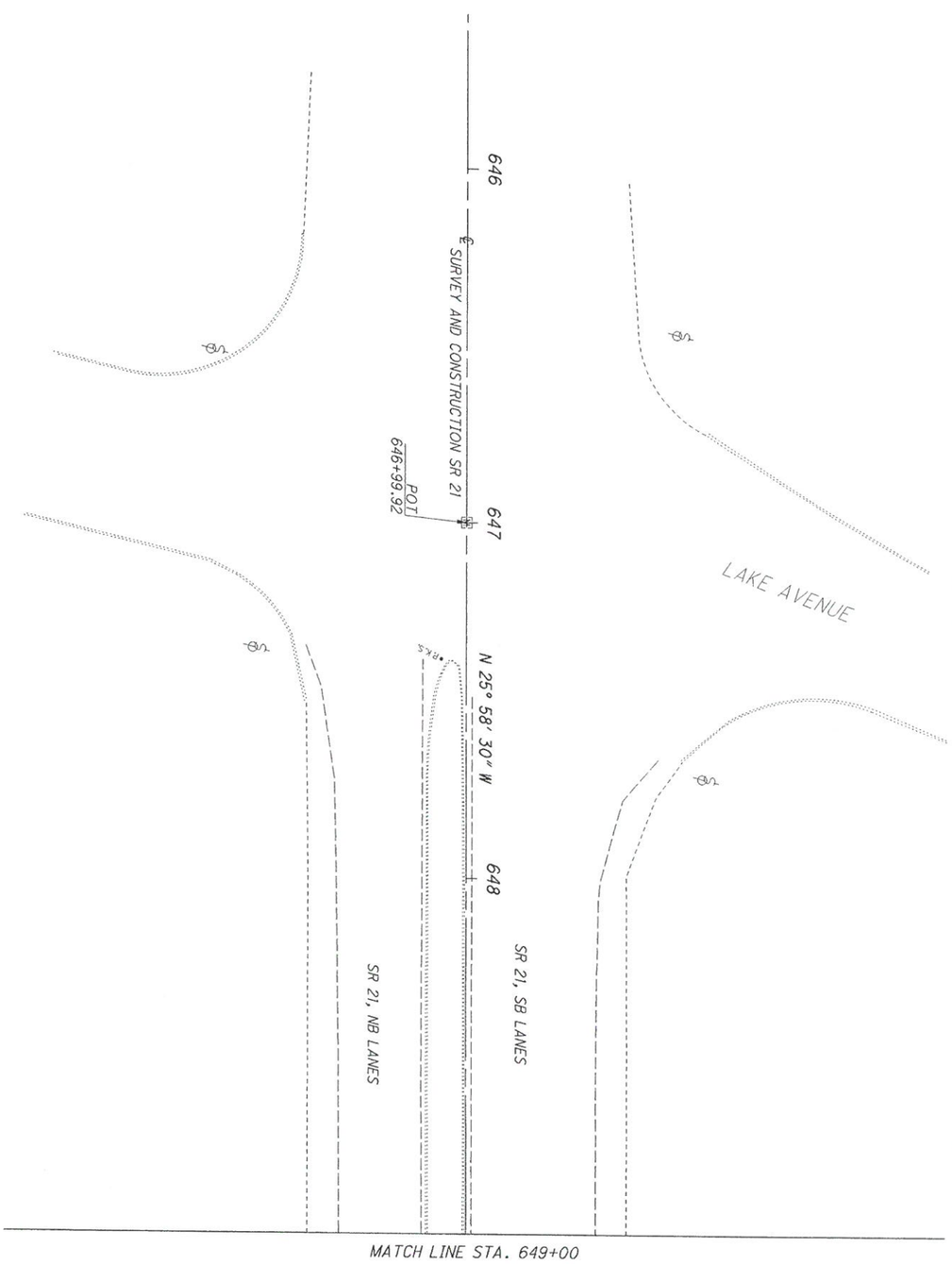

REF NO.	STATION FROM	STATION TO	SIDE											
TOTALS CARRIED TO GENERAL SUMMARY														

61/124

STA-21-12.48

PLAN AND PROFILE
STA. 646+00.00 TO STA. 649+00.00

CALCULATED CLP
CHECKED RWE

0 20
10 40
HORIZONTAL SCALE IN FEET

N

H:\Projects\2006\2006-0007 STA-21-12.48 Part 2\Civil\Drawings\Plan and Profile\25433GP002.dgn 2/12/2007 1:47:06 PM

25433GP002.dgn

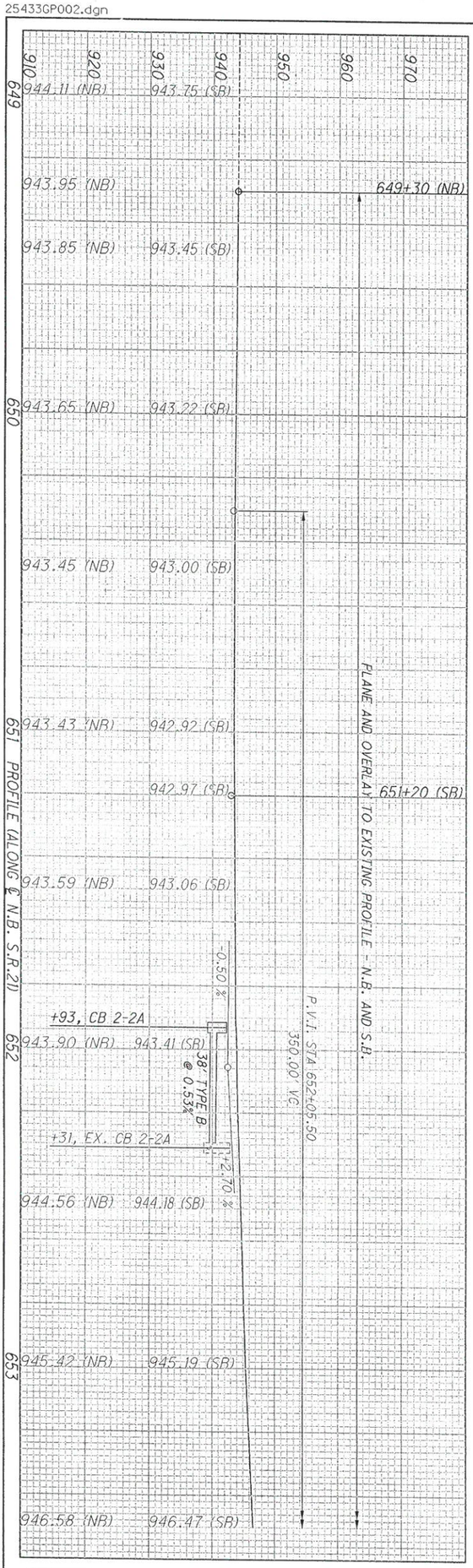

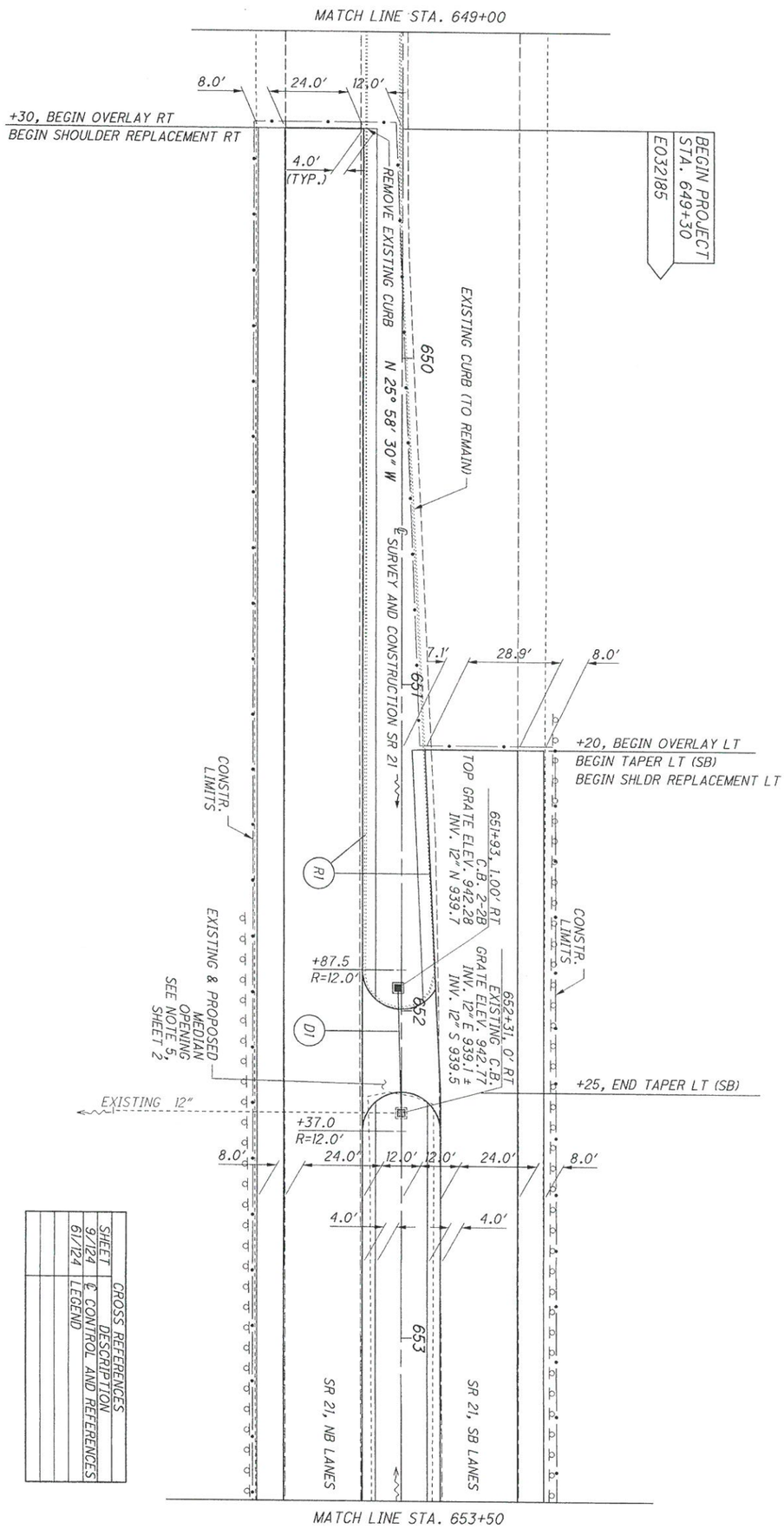

CROSS REFERENCES
SHEET 3/124 ℄ CONTROL AND REFERENCES
61/124 LEGEND

REF NO.	STATION FROM	STATION TO	SIDE	202 CURB REMOVED	603 12" CONDUIT TYPE B	604 CATCH BASIN NO. 2-2B
				L.F.	FT	EA
R-1	649+30	652+00	LT/RT	360		
D-1	651+93	652+31	RT		38	1
TOTALS CARRIED TO GENERAL SUMMARY				360	38	1

62/124

STA-21-12.48

PLAN AND PROFILE
STA. 649+00.00 TO STA. 653+50.00

CALCULATED CLP
CHECKED RWE
0 20 10 40 HORIZONTAL SCALE IN FEET

H:\Projects\2006\2006-0007 STA-21-12_48 Part 2\Civil\Drawings\Plan and Profile\25433GP003.dgn 2/12/2007 2:29:12 PM

25433GP003.dgn

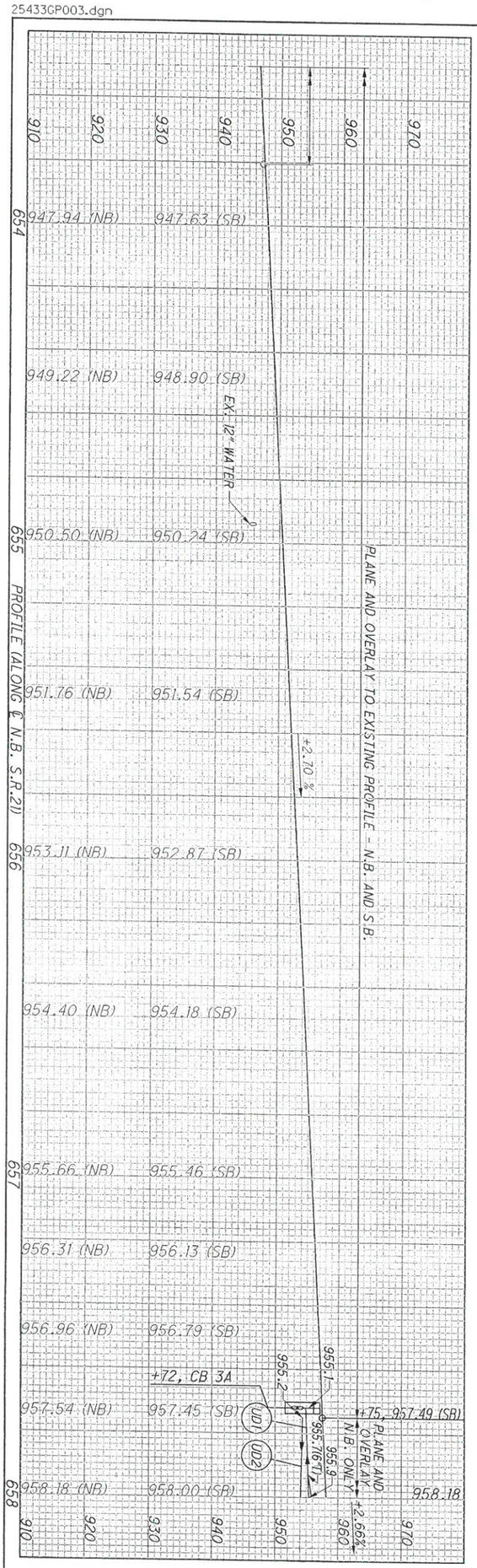

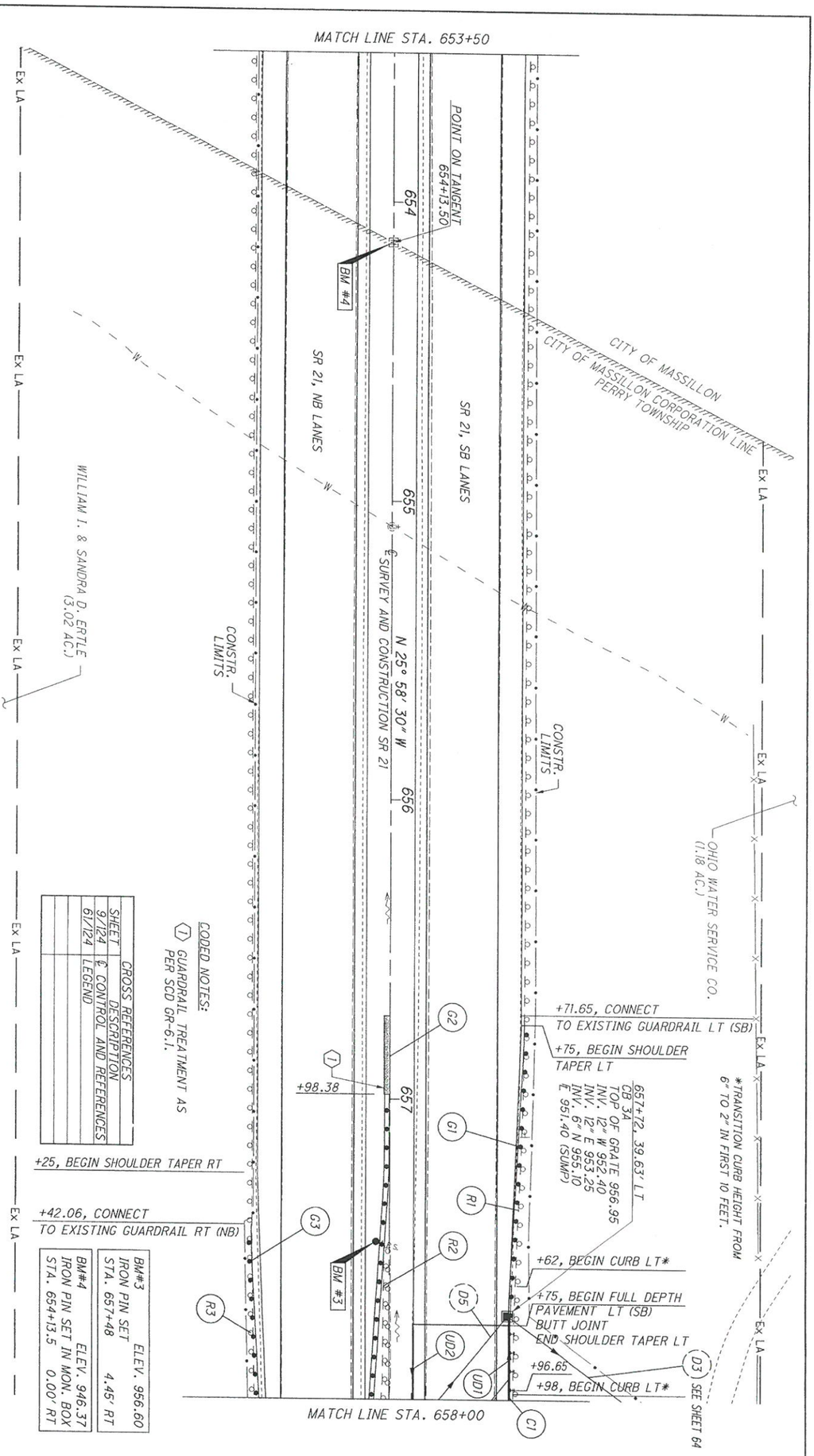

REF NO.	STATION FROM	STATION TO	SIDE	202 GUARDRAIL REMOVED	202 IMPACT ATTENUATOR TYPE 1-98 (BI-DIRECTIONAL)	603 6" CONDUIT, TYPE F FOR UNDERDRAIN OUTLETS	605 6" UNCLASSIFIED PIPE UNDERDRAINS	605 6" SHALLOW PIPE UNDERDRAINS	606 GUARDRAIL, TYPE 5	606 GUARDRAIL, BARRIER DESIGN, TYPE 5	606 BRIDGE TERMINAL ASSEMBLY, TYPE 1	606 BRIDGE TERMINAL ASSEMBLY, TYPE 2	609 CURB TYPE 2-B		
				FT	EA	FT	FT	FT	FT	FT	EA	EA	FT		
R-1	656+71.65	658+30	LT	159											
R-2	657+50	658+90	RT	140											
R-3	657+42.17	658+92	RT	150											
C-1	657+62	658+01	LT												
G-1	656+71.65	657+96.65	LT						125.00				35		
G-2	656+98.38	658+54.63	RT		1				56.25	100.00	1	1			
G-3	657+42.06	658+92.06	RT						150.00		1				
UD-1	657+76	657+99	LT			10		13							
UD-2	657+75	658+10	LT			10	25								
TOTALS CARRIED TO GENERAL SUMMARY				449	1	20	25	13	331.25	100.00	2	1	35		

63/124

STA-21-12.48

PLAN AND PROFILE

STA. 653+50.00 TO STA. 658+00.00

CALCULATED CLP

CHECKED RWE

0 20 10 40

HORIZONTAL SCALE IN FEET

H:\Projects\2006\2006-0007 STA-21-12_48 Part 2\Civil\Drawings\Plan and Profile\25433GP004.dgn 2/12/2007 2:29:08 PM

25433GP004.dgn

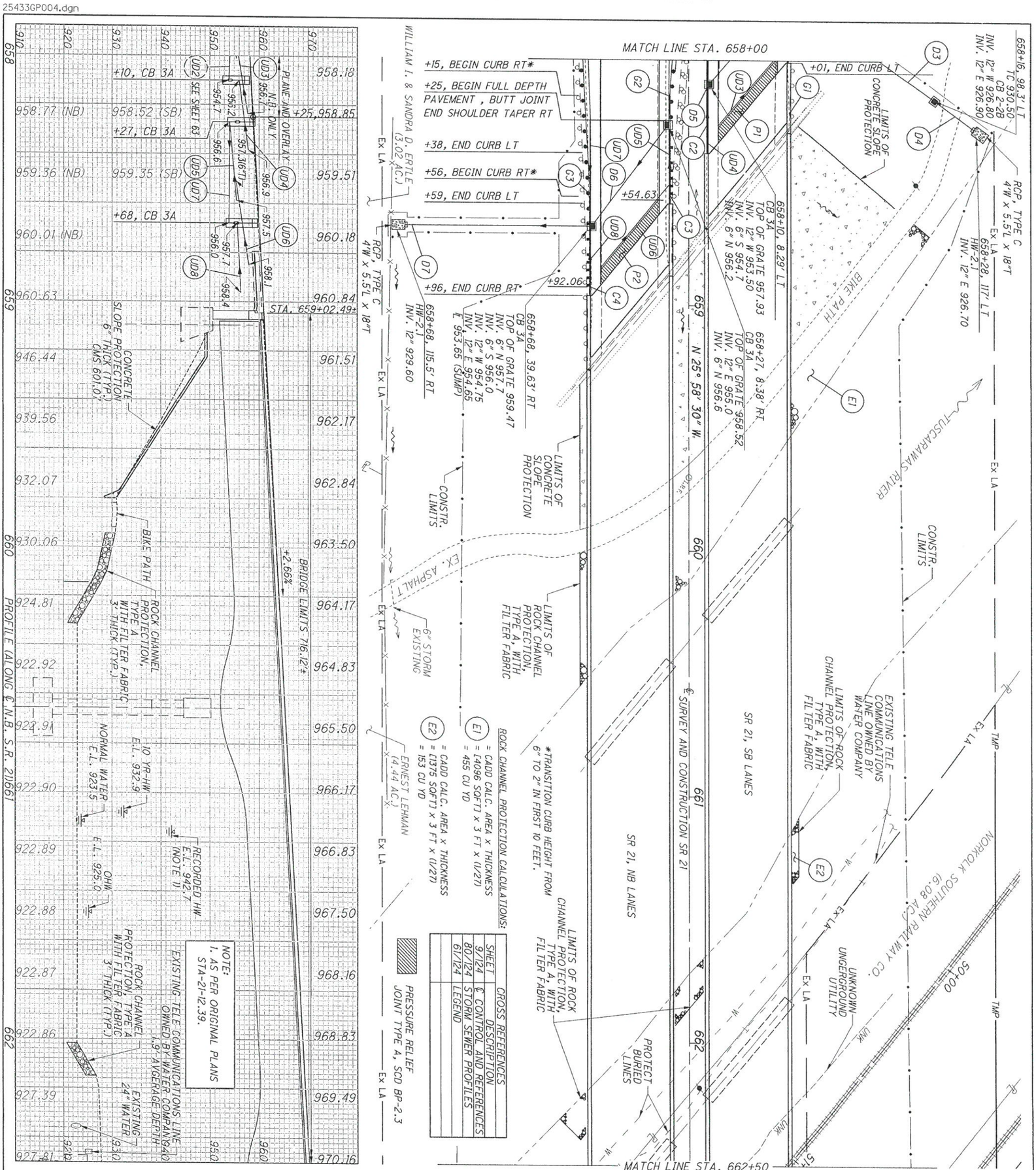

REF NO.	STATION FROM	STATION TO	SIDE	601 RCP, TYPE A W/ FILTER FABRIC	601 RCP, TYPE C W/ FILTER FABRIC	602 CONCRETE MASONRY	603 6" CONDUIT, TYPE F FOR UNDERDRAIN OUTLETS	603 12" CONDUIT, TYPE B	603 12" CONDUIT TYPE D, 707.21 OR 707.22	603 12" CONCRETE TYPE F, 707.21 OR 707.22	604 CATCH BASIN NO. 3A	604 CATCH BASIN NO. 2-2B	605 6" UNCLASSIFIED PIPE UNDERDRAINS	605 6" SHALLOW PIPE UNDRDRAINS	609 CURB, TYPE 2-B	SPECIAL PRESSURE RELIEF JOINT, TYPE A		BRANCH 6x6 WYE	BRANCH 6x6 TEE
				CY	CY	CY	FT	FT	FT	FT	EA	EA	FT	FT	FT	FT		INFORMATION ONLY	
D-3	657+72	658+16	LT							73	1								
D-4	658+16	658+28	LT		1.5	0.21			20			1							
D-5	657+72	658+10	LT/RT					49			1								
D-6	658+27	658+68	RT					51			1								
D-7	658+68		LT/RT		1.5	0.21				70	1								
UD-3	657+93	658+27	LT				10							45				1	
UD-4	658+10	658+38	LT				10							18					
UD-5	658+27	658+59	RT				10						30						
UD-6	658+51	658+85	RT											45				1	
UD-7	658+25	658+68	RT				10						33						
UD-8	658+68	658+96	RT				10							18					
E-1	658+65	660+55	LT/RT	455															
E-2	661+08	662+40	LT/RT	153															
P-1	658+00	658+34	LT													38			
P-2	658+57	658+92	RT													38			
C-2	657+98	658+38	LT												36				
C-3	658+15	658+59	RT												40				
C-4	658+56	658+96	RT												36				
TOTALS CARRIED TO GENERAL SUMMARY				608	3	0.42	50	100	20	143	4	1	63	126	112	76			

64/124

STA-21-12.48

PLAN AND PROFILE
STA. 658+00.00 TO STA. 662+50.00

CALCULATED CLP
CHECKED RWE

0 20 10 40
HORIZONTAL SCALE IN FEET

N

PLAN AND PROFILE
STA. 662+50.00 TO STA. 667+00.00

STA-21-12.48

65/124

CALCULATED CLP
CHECKED RWE

HORIZONTAL SCALE IN FEET 0 10 20 40

EXISTING STRUCTURE
TYPE: TWIN BRIDGE, CONTINOUS STEEL GIRDER W/REINFORCED CONCRETE DECK AND SUBSTRUCTURE UNITS.
SPAN: 156'-0"±; 2 @ 195'-0"±; 156'-0"±
ROADWAY: 33'-6" F/F PARAPET; 36'-6" O/O DECK
LOADING: CF-2000
SKEW: 51°22'00"±
ALIGNMENT: TANGENT
WEARING SURFACE: 4"± SUPERPLACTICIZED CONCRETE OVERLAY
APPROACH SLABS: 25'± (AS-1-54)
YEAR BUILT: 1957

PROPOSED STRUCTURE
PROPOSED WORK: NEW COMPOSITE CONCRETE DECK ON EXISTING GIRDERS AND SUBSTRUCTURE. REHABILITATE AND PAINT SUPERSTRUCTURE. PATCH AND SEAL SUBSTRUCTURE UNITS. REHABILITATE PIER CAPS. REMOVE AND REPLACE TOP OF ABUTMENT BACKWALLS. NEW 25' APPROACH SLABS. NEW SLOPE PROTECTION, DRAINAGE. NEW STRIP SEAL JOINTS.
TYPE: TWIN BRIDGE, COMPOSITE CONCRETE DECK ON EXISTING STEEL GIRDERS AND SUBSTRUCTURE UNITS.
SPAN: 156'-0"±; 2 @ 195'-0"±; 156'-0"±
ROADWAY: 32'-0" F/F PARAPET; 35'-0" o/o DECK
LOADING: HS25 AND ALT. MILITARY LOADING
SKEW: 51°22'00"±
ALIGNMENT: TANGENT
WEARING SURFACE: 1" MONOLITHIC CONCRETE
APPROACH SLABS: 25'-0" (AS-1-81)
SUPERELEVATION: NORMAL CROWN
LATITUDE: 40°49'00"N LONGITUDE: 81°31'50"W

CROSS REFERENCES

SHEET	DESCRIPTION
9/124	℄ CONTROL AND REFERENCES
75/124	CROSS SECTIONS
61/124	LEGEND

CODED NOTES:
(2) PRECAST REINFORCED CONCRETE OUTLET AS PER SCD DM-1.1

* ℄ SURVEY & CONSTRUCTION IS TAKEN FROM PROPOSED US 21 AS SHOWN ON PROJECT PLANS FOR STA-21-12.39 (MAY 1956, F-1010 (4)).

PRESSURE RELIEF JOINT TYPE A, SCD BP-2.3

℄ S.R. 21
PI STA. 674+85.13
Δ=15°20'30" LT
D=0°45'
R=7639.44'
T=1028.93'
L=2045.56'
E=68.98'

666+50, 39.25' LT ℄ SB
OUTLET DM-1.1
INV. 6" E 974.8

CRUSHED AGGREGATE SLOPE PROTECTION

CONSTR. LIMITS

PC STA. 664+56.20 ℄ SURVEY & CONSTRUCTION
POT ℄ NB AND SB LANES

T.R. 353

MATCH LINE STA. 662+50

SR 21, SB LANES

SR 21, NB LANES

℄ SURVEY & CONSTR. S.R. 21

℄ NORTHBOUND LANES

℄ SOUTHBOUND LANES

℄ SURVEY & CONSTR., S.R. 21 *

UKNOWN UNDERGROUND UTILITY

PROTECT BURIED LINES

NORFOLK SOUTHERN RAILWAY CO. (6.08 AC.)

R.J. CORMAN RAILROAD CO. (3.91 AC.)

LIMITS OF CRUSHED AGGREGATE SLOPE PROTECTION

RIVERSIDE AVENUE

666+74, 23.5' LT ℄ NB
EXISTING C.B.
GRATE ELEV. 979.62
EX. INV. 15" W 977.32
INV. 6" E 977.95
INV. 6" SW 977.95

667+00, 26' RT ℄ NB
OUTLET DM-1.1
INV. 6" W 978.1

MATCH LINE STA. 667+00 (℄ NORTHBOUND LANES & SOUTHBOUND LANES)

+50, END FULL DEPTH PAVEMENT, BUTT JOINT BEGIN SHOULDER TAPER LT

+00, END SHOULDER TAPER LT

ABANDONED

EXISTING 15"

6" TEE
6" X 90°
6" X 24'-F
6" X 45°
6" X 11'-F
6" TEE
6" X 8'-F
6" X 90°
6" X 10'-F

EXISTING C.B.

BM #2 ELEV. 980.46
IRON PIN SET
STA. 666+51 0.30' RT

BM #8 ELEV. 949.86
MINE SPIKE SET
STA. 664+68 1.87' LT

BM Y305 ELEV. 938.32
VERTICALLY SET BRASS DISK IN PIER WALL
STA. 664+63 31.88' RT

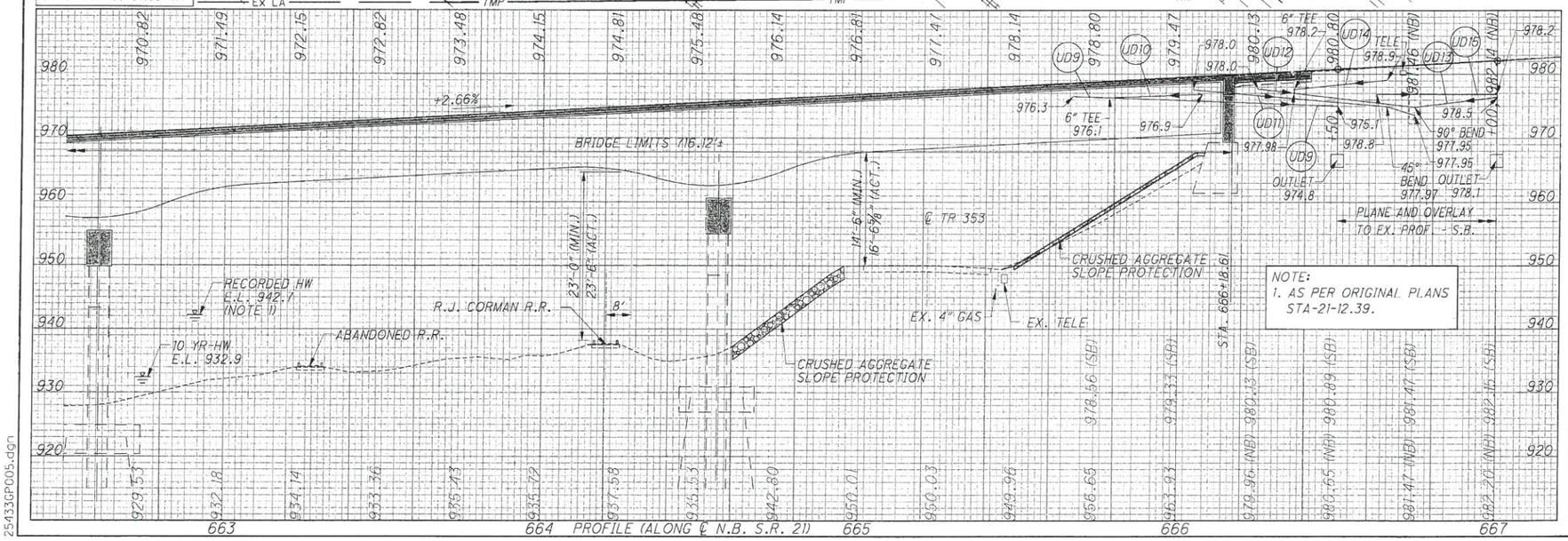

NOTE:
1. AS PER ORIGINAL PLANS STA-21-12.39.

REF NO.	STATION FROM	STATION TO	SIDE	202 GUARD-RAIL REMOVED	601 TIED CONCRETE BLOCK MAT TYPE 1	603 6" CONDUIT, TYPE F FOR UNDERDRAIN OUTLETS	604 PRECAST REINFORCED CONCRETE OUTLET	605 6" UNCLASSIFIED PIPE UNDER-DRAINS	605 6" SHALLOW PIPE UNDER-DRAINS	606 GUARD-RAILS, TYPE 5	606 GUARD-RAILS BARRIER DESIGN, TYPE 5	606 BRIDGE TERMINAL ASSEMBLY TYPE 1	606 BRIDGE TERMINAL ASSEMBLY TYPE 2	SPECIAL PRESSURE RELIEF JOINT TYPE A	BENDS 6x6 WYE	BENDS 6x6 TEE
				FT	EA	FT	EA	FT	FT	FT	FT	FT	FT	FT	INFORMATION ONLY	
G-4	665+71.08	667+02.33	LT	165						131.25		1				1
G-5	666+08.51	667+64.76	LT	132						56.25	100.00	1				1
G-6	666+66.46	668+10.21	RT	176						143.75			1			
UD-9	665+67	666+50	LT		1	23	1	83							1	
UD-10	665+78	666+07	LT						45					38		2
UD-11	666+04	666+74	LT			11		61							1	1
UD-12	666+25	666+74	RT			8		24								
UD-13	666+74	667+00	RT		1		1	26							2	
UD-14	666+36	666+70	RT						45					38		2
UD-15	666+62	667+00	RT			10		38								
P-3	665+71	666+06	LT													
P-4	666+29	666+64	RT													
TOTALS CARRIED TO GENERAL SUMMARY				473	2	52	2	232	90	331.25	100.00	2	1	76	4	6

H:\Projects\2006\2006-0007 STA-21-12.48 Part 2\Civil\Drawings\Plan and Profile\25433GP005.dgn 8/16/2007 4:19:18 PM

25433GP005.dgn

CODED NOTES:

(1) GUARDRAIL TREATMENT AS PER SCD GR-6.1.

(2) PRECAST REINFORCED CONC. OUTLET AS PER SCD DM-1.1

* ℄ SURVEY & CONSTRUCTION IS TAKEN FROM ℄ PROPOSED US 21 AS SHOWN ON PROJECT PLANS FOR STA-21-12.39 (MAY 1956, F-1010 (4)).

℄ SURVEY & CONST., S.R. 21	℄ SOUTHBOUND LANES (SB)	℄ NORTHBOUND LANES (NB)
PI STA. 674+85.13	PI STA. 674+32.70	PI STA. 675+37.50
Δ=15°20'30" LT	Δ=15°20'30" LT	Δ=15°20'30" LT
D=0°45'	D=0°45'09"	D=0°44'52"
R=7639.44'	R=4583.66'	R=4583.66'
T=1028.93'	T=617.36'	T=617.36'
L=2045.56'	L=1227.34'	L=1227.34'
E=68.98'	E=41.39'	E=41.39'

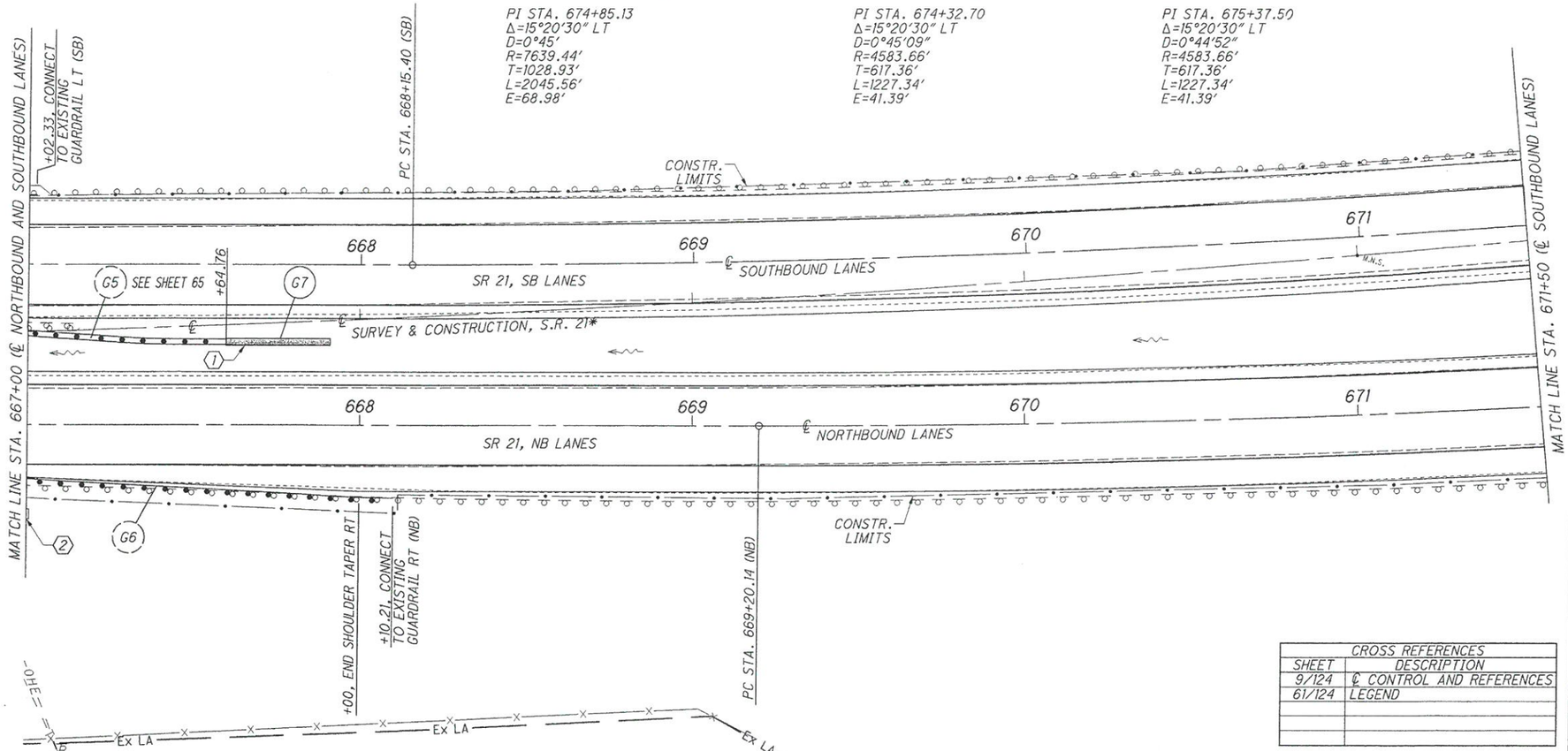

CROSS REFERENCES	
SHEET	DESCRIPTION
9/124	℄ CONTROL AND REFERENCES
61/124	LEGEND

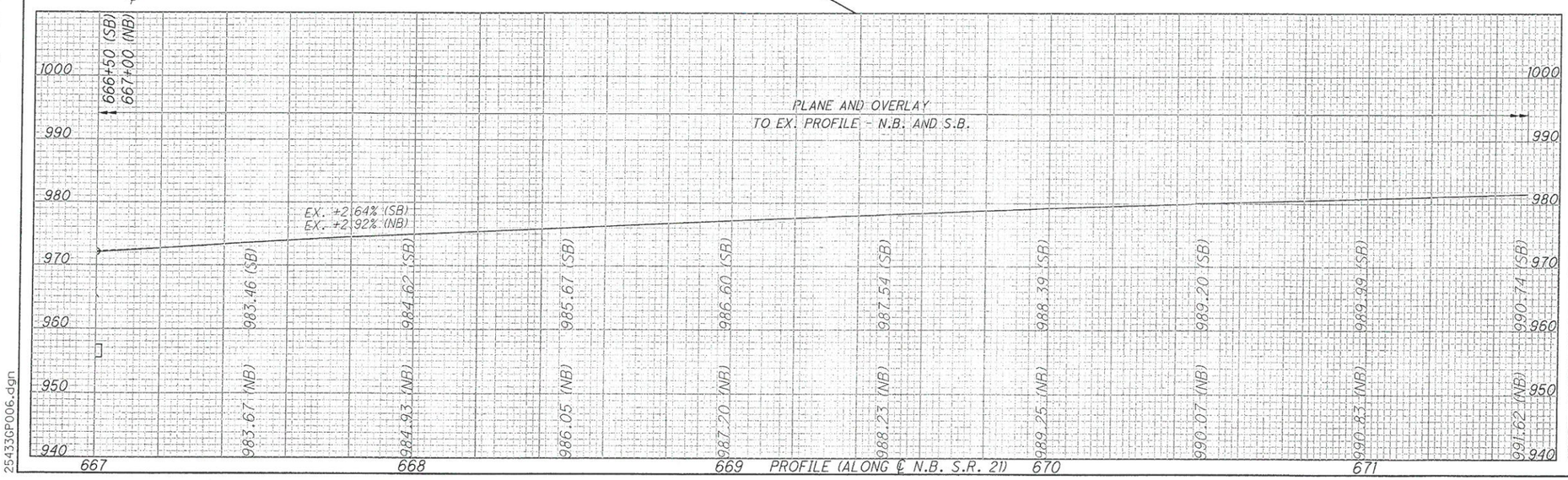

REF NO.	STATION FROM	STATION TO	SIDE	606 IMPACT ATTENUATOR TYPE 1-98 (BI-DIRECT-IONAL) EA
G-7	667+64.76	667+96.26	RT	1
TOTALS CARRIED TO GENERAL SUMMARY				1

CALCULATED CLP
CHECKED RWE

HORIZONTAL SCALE IN FEET
0 10 20 40

PLAN AND PROFILE
STA. 667+00.00 TO STA. 671+50.00

STA-21-12.48

66
124

H:\Projects\2006\2006-0007 STA-21-12_48 Part 2\Civil\Drawings\Plan and Profile\25433GP006.dgn
25433GP006.dgn 2/12/2007 1:46:49 PM

℄ SURVEY & CONSTRUCTION., S.R. 21

PI STA. 674+85.13
Δ=15°20'30" LT
D=0°45'
R=7639.44'
T=1028.93'
L=2045.56'
E=68.98'

℄ SOUTHBOUND LANES (SB)

PI STA. 674+32.70
Δ=15°20'30" LT
D=0°45'09"
R=4583.66'
T=617.36'
L=1227.34'
E=41.39'

℄ NORTHBOUND LANES (NB)

PI STA. 675+37.50
Δ=15°20'30" LT
D=0°44'52"
R=4583.66'
T=617.36'
L=1227.34'
E=41.39'

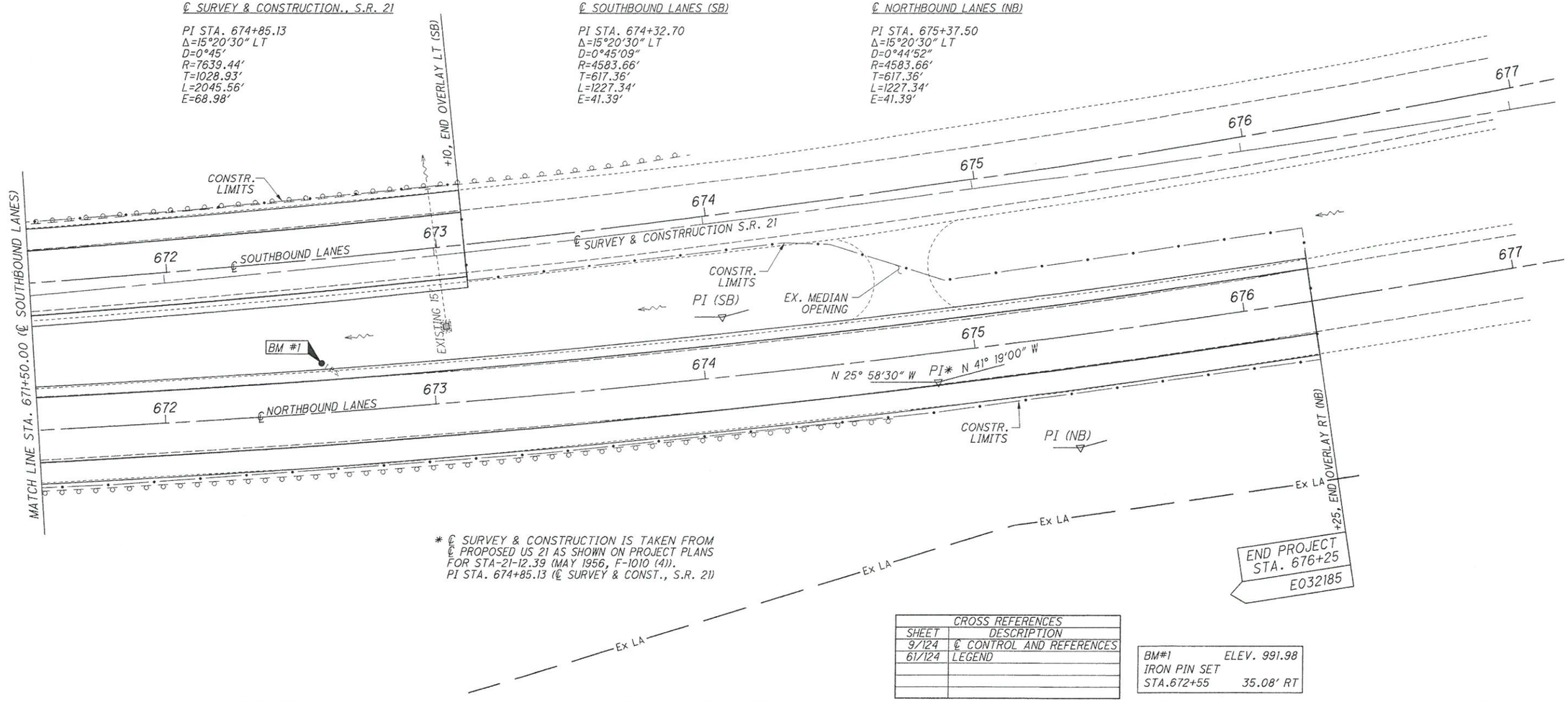

* ℄ SURVEY & CONSTRUCTION IS TAKEN FROM ℄ PROPOSED US 21 AS SHOWN ON PROJECT PLANS FOR STA-21-12.39 (MAY 1956, F-1010 (4)). PI STA. 674+85.13 (℄ SURVEY & CONST., S.R. 21)

CROSS REFERENCES	
SHEET	DESCRIPTION
9/124	℄ CONTROL AND REFERENCES
61/124	LEGEND

BM#1 ELEV. 991.98
IRON PIN SET
STA.672+55 35.08' RT

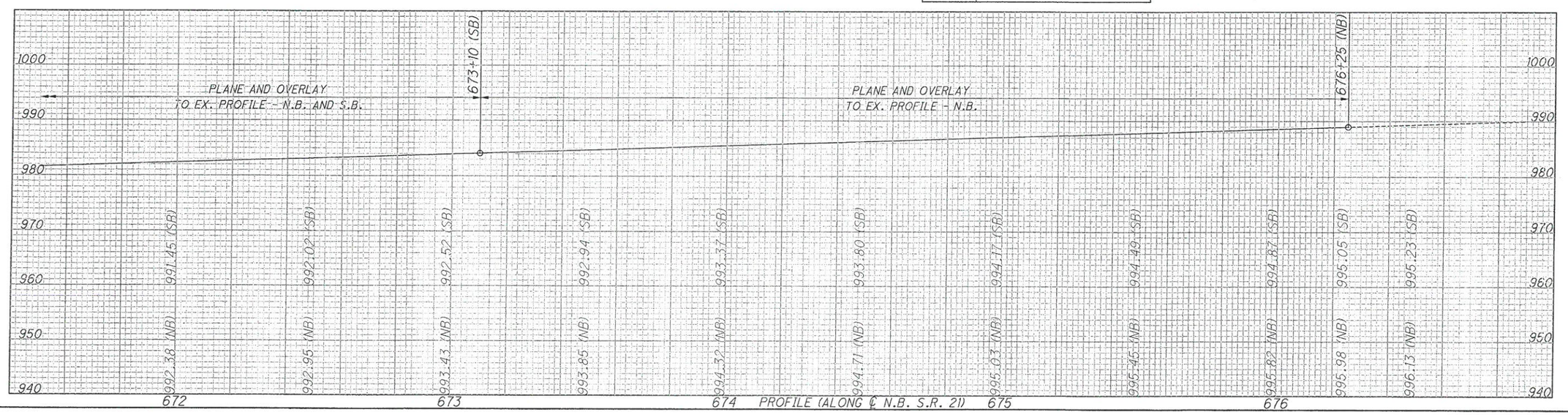

HORIZONTAL SCALE IN FEET
0 10 20 40

CALCULATED CLP
CHECKED RWE

PLAN AND PROFILE
STA. 671+50.00 TO STA. 677+00.00

STA-21-12.48

67
124

H:\Projects\2006\2006-0007 STA-21-12.48 Part 2\Civil\Drawings\Plan and Profile\254336P007.dgn
2/12/2007 2:28:58 PM
254336P007.dgn

SEEDING	
END WIDTH	SQ. YDS.
	0
	0

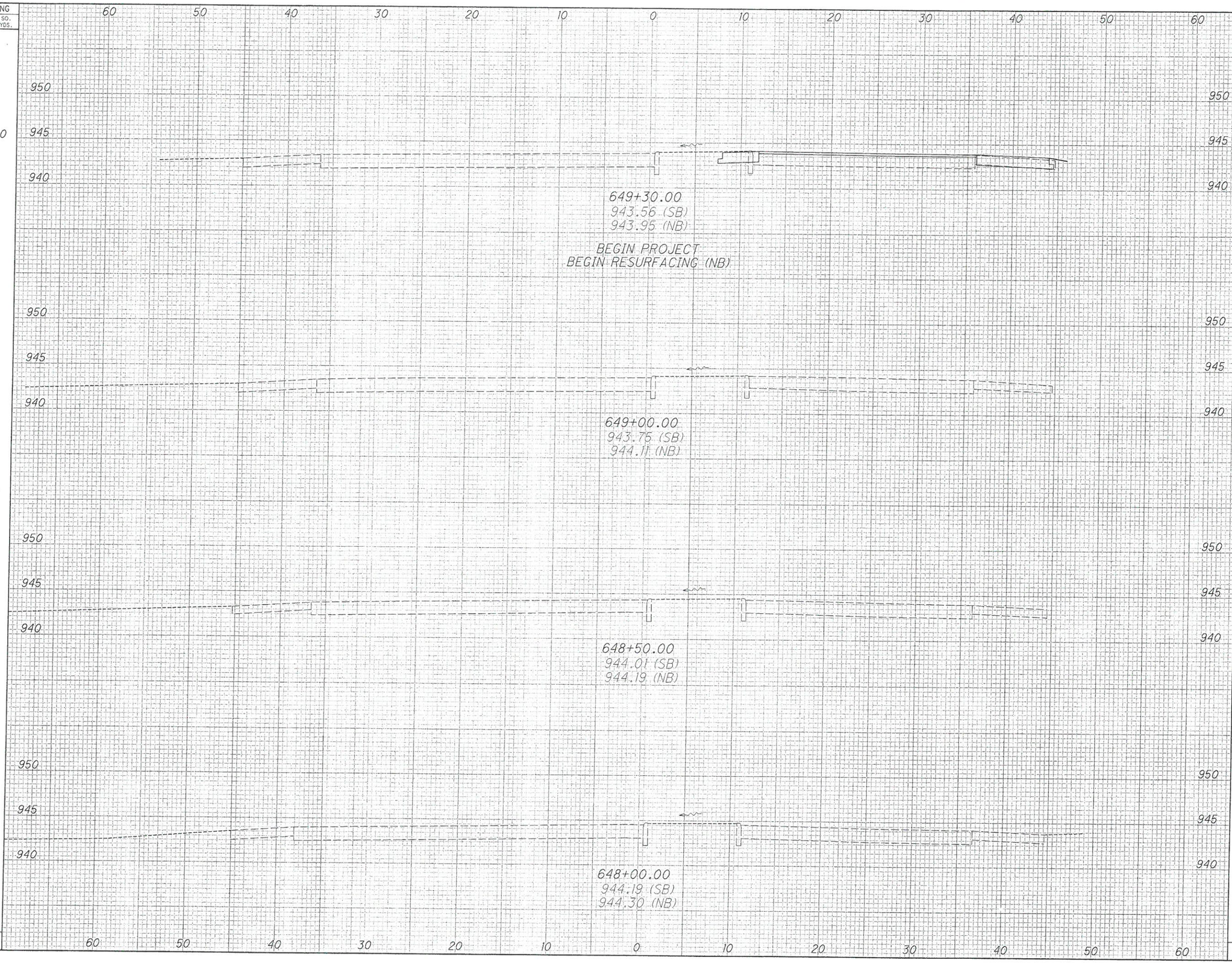

END AREA		VOLUME	
CUT	FILL	CUT	FILL
13	0		
		0	0

CALCULATED CLP
CHECKED SAN

CROSS SECTIONS
STA. 648+00.00 TO STA. 649+30.00

STA-21-12.48

68
124

SEEDING	
END WIDTH	SQ. YDS.
0	0
0	0
0	0
0	0

60 50 40 30 20 10 0 10 20 30 40 50 60

950
945
940

943.4±

651+00.00
942.92 (SB)
943.43 (NB)

650+50.00
943.00 (SB)
943.45 (NB)

650+00.00
943.22 (SB)
943.65 (NB)

649+50.00
943.45 (SB)
943.85 (NB)

END AREA		VOLUME	
CUT	FILL	CUT	FILL
15	0		
		28	0
15	0		
		28	0
15	0		
		27	0
14	0		
		10	0
		93	0

CALCULATED CLP
CHECKED SAN

CROSS SECTIONS

STA. 649+50.00 TO STA. 651+00.00

STA-21-12.48

SEEDING	
END WIDTH	SQ. YDS.
0	0
0	36
13	40
11	12
	88

652+31.0' RT
EX. C.B.
GRATE ELEV. 942.77
INV. 12" E 939.1 ±
PROP. INV. 12" S 939.5

652+50.00
944.18 (SB)
944.56 (NB)

652+00.00
943.41 (SB)
943.90 (NB)

7:1 5:1
942.5

651+50.00
943.06 (SB)
943.59 (NB)

2' TYP. 5:1
0.08
942.7

651+20.00
942.97 (SB)
943.58 (NB)

BEGIN RESURFACING (SB)

60 50 40 30 20 10 0 10 20 30 40 50 60

950 945 940

END AREA		VOLUME	
CUT	FILL	CUT	FILL
30	0		
		76	0
52	0		
		86	0
41	0		
		44	0
39	0		
		20	0
		226	0

CALCULATED CLP
CHECKED SAN

CROSS SECTIONS
STA. 651+20.00 TO STA. 652+50.00

STA-21-12.48

70
124

SEEDING	
END WIDTH	SQ. YDS.
0	0
0	0
0	0
0	0
0	0
0	0
0	0

END AREA		VOLUME	
CUT	FILL	CUT	FILL
30	0	56	0
30	0	56	0
30	0	56	0
30	0	56	0
30	0	56	0
30	0	56	0

655+00.00
950.24 (SB)
950.50 (NB)

654+50.00
948.90 (SB)
949.22 (NB)

654+00.00
947.63 (SB)
947.94 (NB)

653+50.00
946.47 (SB)
946.58 (NB)

653+00.00
945.19 (SB)
945.42 (NB)

ORIGINAL GROUND

EXISTING 12" WATER

4' MIN.

CALCULATED CLP
CHECKED

CROSS SECTIONS
STA. 653+00.00 TO STA. 655+00.00

STA-21-12.48

71
124

SEEDING	
END WIDTH	SQ. YDS.
0	0
	0
0	0
	0
0	0
	0
0	0
	0
0	0

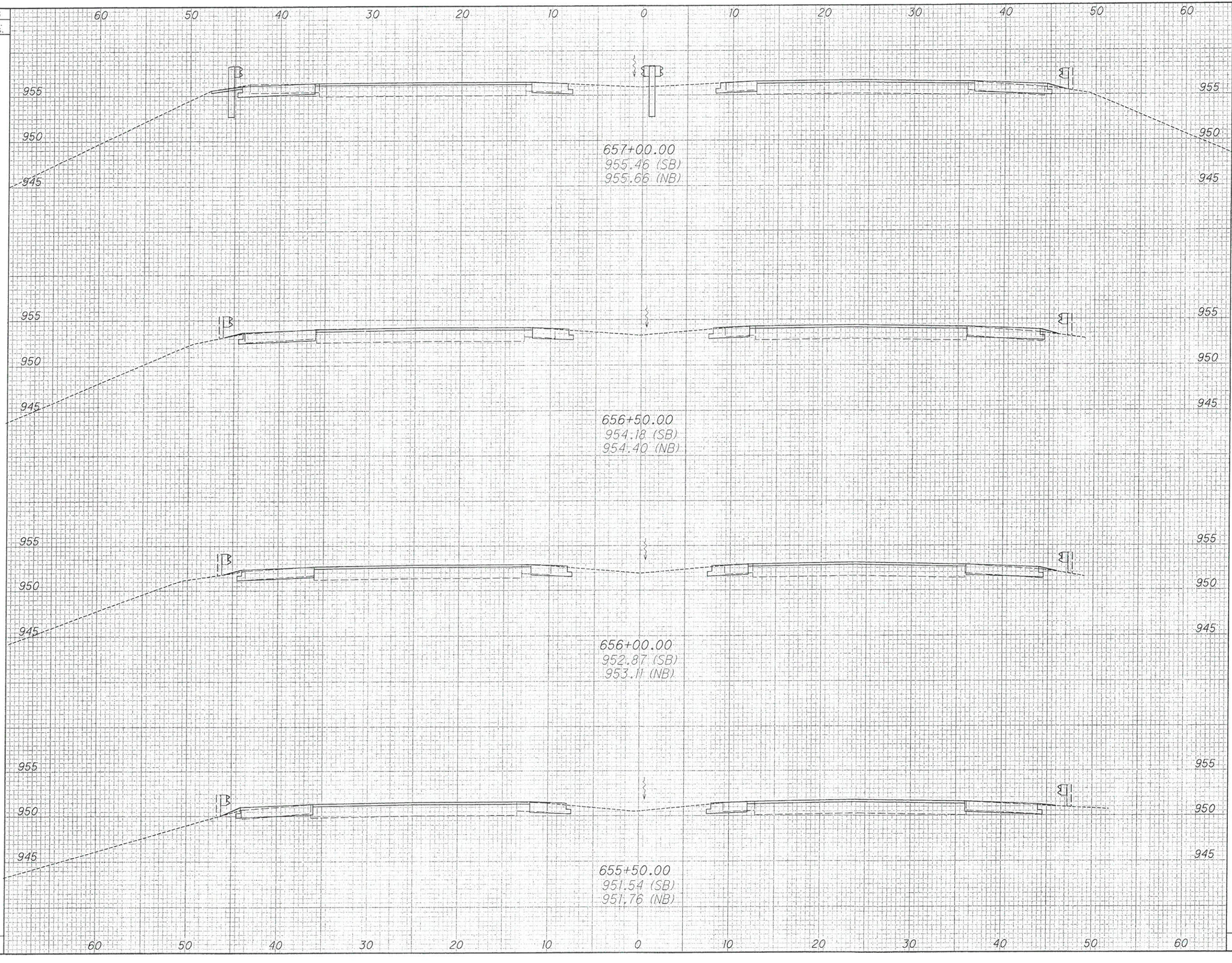

END AREA		VOLUME	
CUT	FILL	CUT	FILL
30	0		
		56	0
30	0		
		56	0
30	0		
		56	0
30	0		
		56	0
		224	0

CALCULATED CLP
CHECKED

CROSS SECTIONS

STA-21-12.48

72
124

SEEDING	
END WIDTH	SQ. YDS.
0	
	22
16	
	46
17	
	24
0	
	0
	92

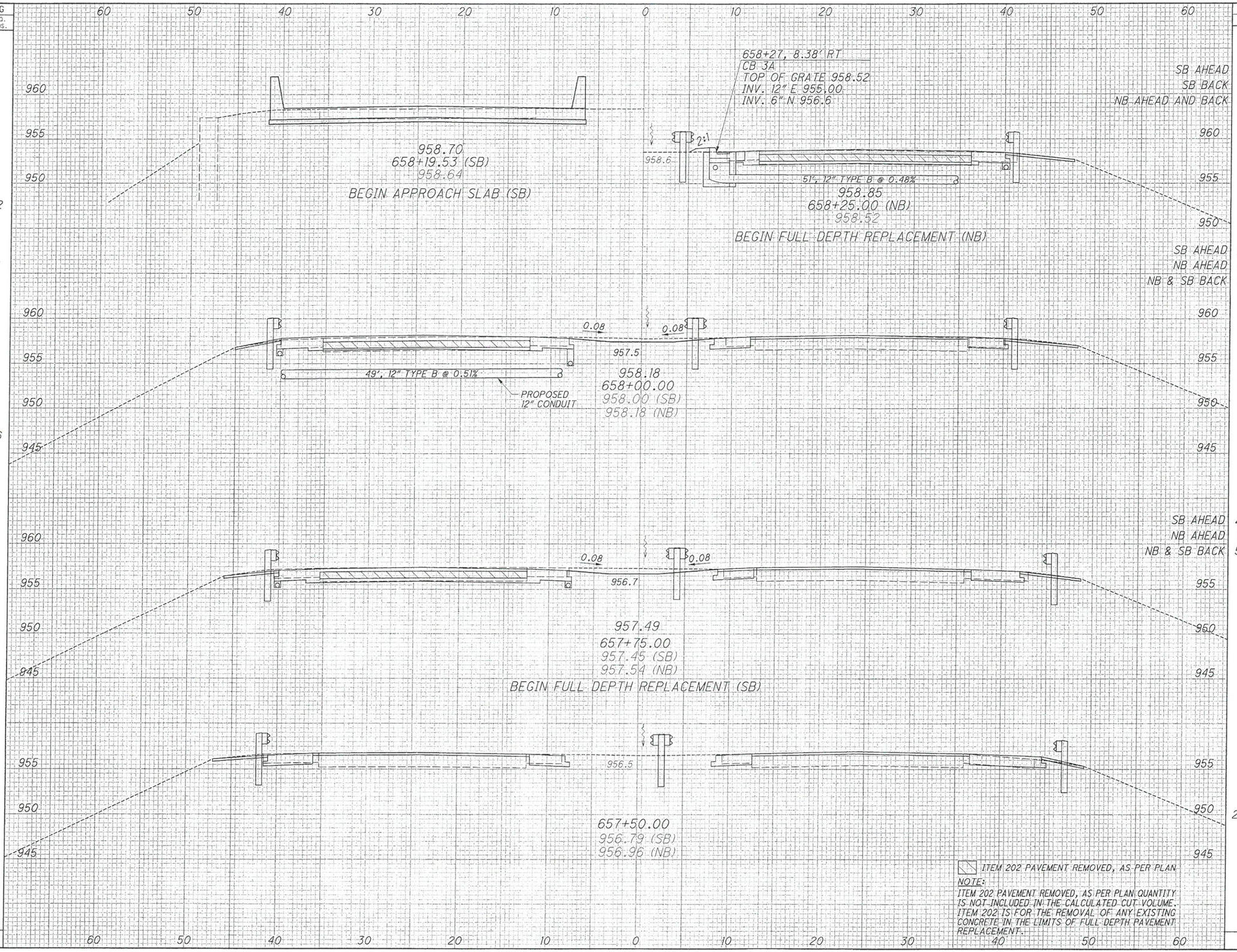

END AREA		VOLUME	
CUT	FILL	CUT	FILL
SB AHEAD 32	0		
SB BACK 10	0		
NB AHEAD AND BACK 30	0		
	SB	15	0
	NB	20	0
SB AHEAD 30	0		
NB AHEAD 13	0		
NB & SB BACK 43	0		
	SB	38	0
	NB	26	0
SB AHEAD 40	0		
NB AHEAD 14	0		
NB & SB BACK 54	0		
27	0		
		38	0
		53	0
		190	0

ITEM 202 PAVEMENT REMOVED, AS PER PLAN

NOTE:
ITEM 202 PAVEMENT REMOVED, AS PER PLAN QUANTITY IS NOT INCLUDED IN THE CALCULATED CUT VOLUME. ITEM 202 IS FOR THE REMOVAL OF ANY EXISTING CONCRETE IN THE LIMITS OF FULL DEPTH PAVEMENT REPLACEMENT.

CALCULATED CLP
CHECKED SAN

CROSS SECTIONS
STA. 657+50.00 TO STA. 658+25.00

STA-21-12.48

SEEDING END WIDTH	SEEDING SQ. YDS.
0	
0	
0	
	0
0	
0	
	0
0	
0	

CROSS SECTIONS
STA. 666+50.00 TO STA. 668+00.00

CALCULATED: CLP
CHECKED: SAN

STA-21-12.48

75
124

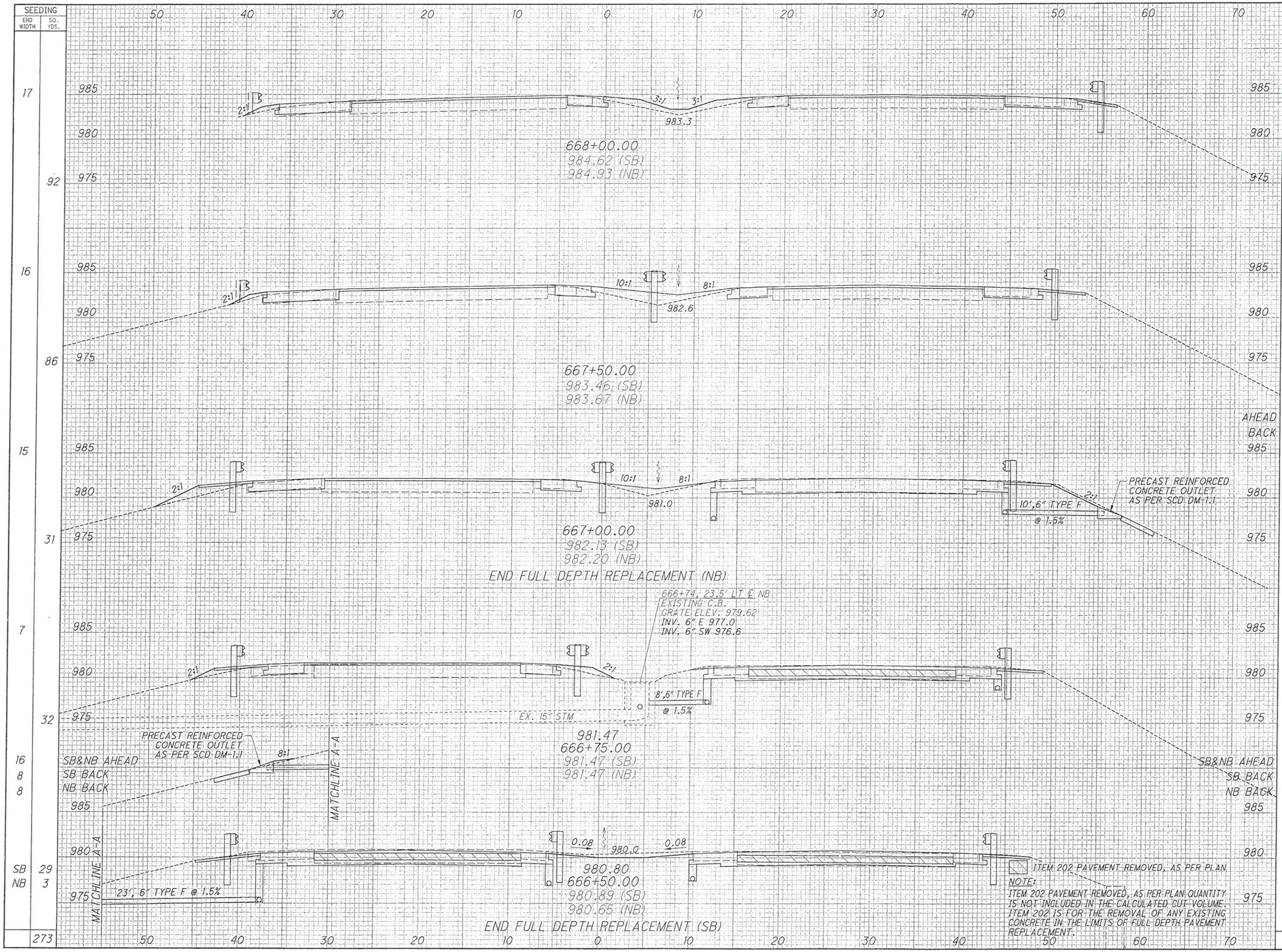

NOTE:
ITEM 202 PAVEMENT REMOVED, AS PER PLAN QUANTITY IS NOT INCLUDED IN THE CALCULATED CUT VOLUME. ITEM 202 IS FOR THE REMOVAL OF ANY EXISTING CONCRETE IN THE LIMITS OF FULL DEPTH PAVEMENT REPLACEMENT.

SEEDING END WIDTH	SEEDING SQ. YDS.	END AREA CUT	END AREA FILL	VOLUME CUT	VOLUME FILL
17	92	30	12	53	24
16	86	27	14	53	20
		AHEAD 30	7		
		BACK 50	7		
15	31			46	6
7		50	5		
16		SB&NB AHEAD 52	0		
8		SB BACK 39	0		
8		NB BACK 35	0		
SB 29				SB 83	0
NB 3				NB 8	0
273				298	52

SEEDING	
END WIDTH	SQ. YDS.
21	111
19	106
19	103
18	97
17	94
	511

END AREA	
CUT	FILL
30	15
30	12
30	11
30	12
30	14

VOLUME	
CUT	FILL
56	25
56	21
57	21
56	24
56	24
280	115

CALCULATED CLP
CHECKED SAN

CROSS SECTIONS
STA. 668+50.00 TO STA. 670+50.00

STA-21-12.48

670+50.00
989.20 (SB)
990.07 (NB)
987.9

670+00.00
988.39 (SB)
989.25 (NB)
987.1

669+50.00
987.54 (SB)
988.23 (NB)
986.0

669+00.00
986.60 (SB)
987.20 (NB)
985.3

668+50.00
985.67 (SB)
986.05 (NB)
984.3

76
124

SEEDING END WIDTH	SEEDING SQ. YDS.
25	
	136
24	
	131
23	
	125
22	
	119
	511

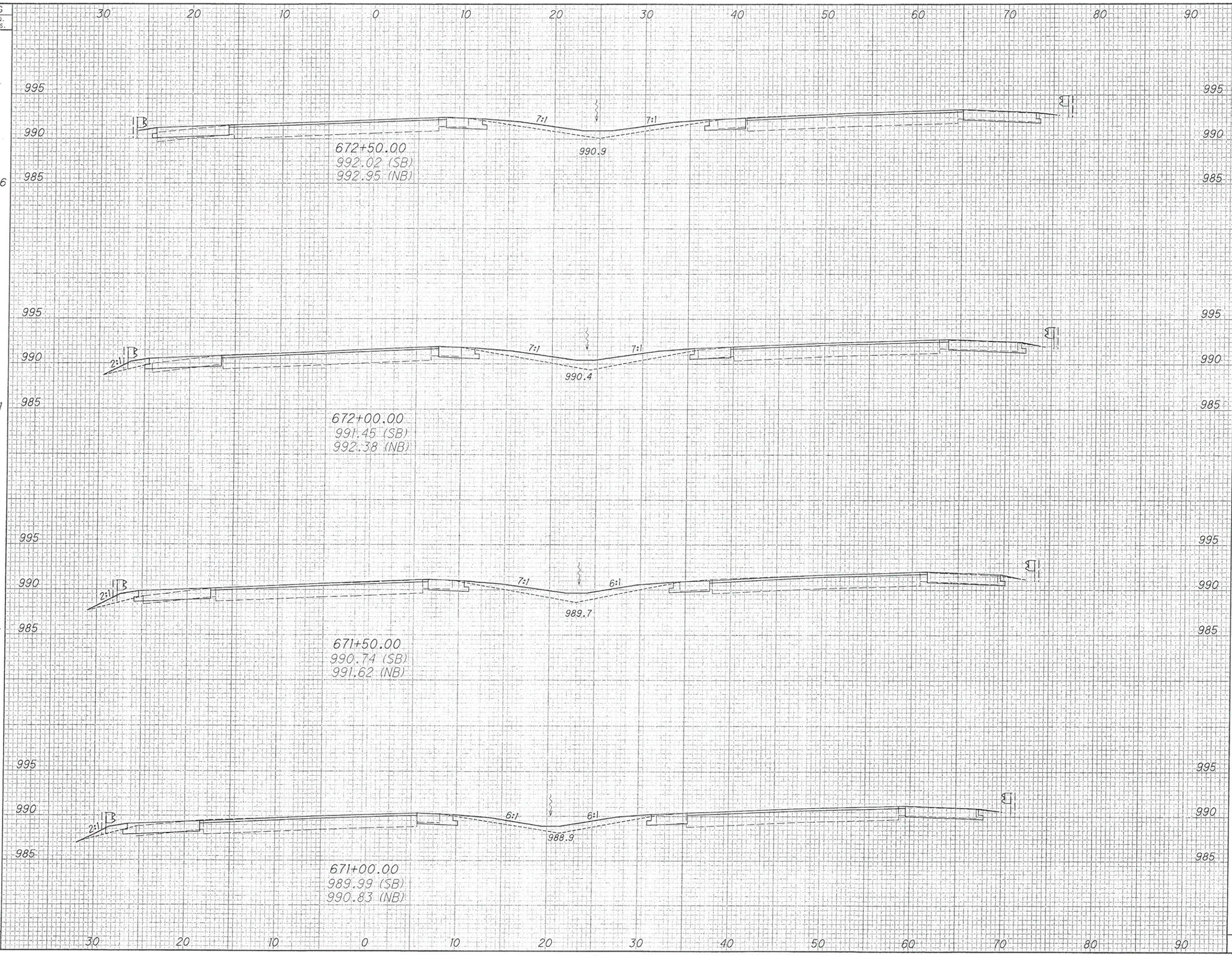

END AREA CUT	END AREA FILL	VOLUME CUT	VOLUME FILL
30	15		
		56	31
30	18		
		56	32
30	16		
		56	27
30	13		
		56	26
		224	116

CALCULATED CLP
CHECKED SAN

CROSS SECTIONS
STA. 671+00.00 TO STA. 672+50.00
STA-21-12.48

77
124

SEEDING		END AREA		VOLUME	
END WIDTH	SQ. YDS.	CUT	FILL	CUT	FILL
8	44	15	2	28	6
8	106	15	4	28	12
30	164	15	9	28	21
29	153	15	14	42	23
26	142	30	11	56	24
	203			182	86

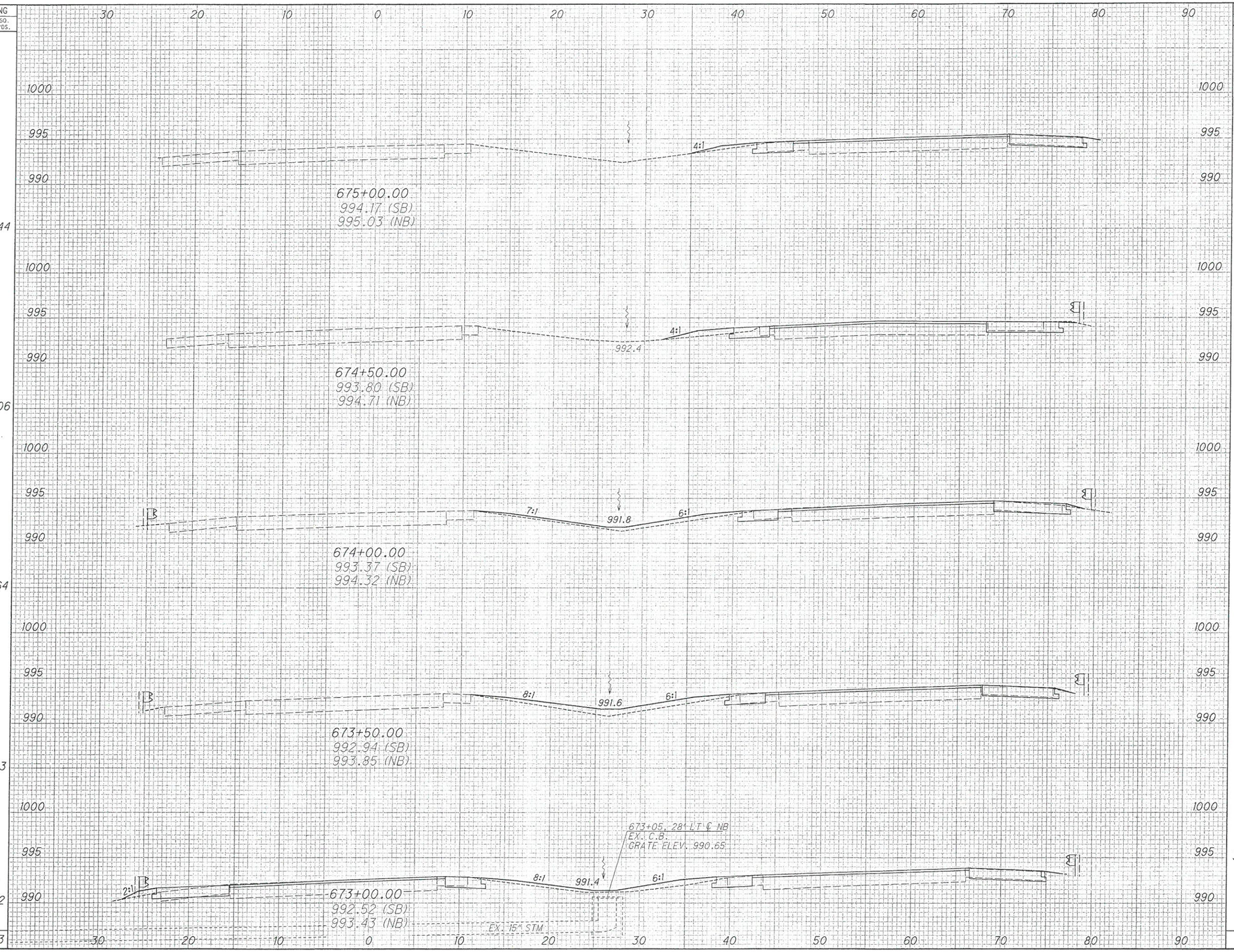

CALCULATED CLP
CHECKED SAN

CROSS SECTIONS
STA. 673+00.00 TO STA. 675+00.00

STA-21-12.48

78
124

SEEDING	
END WIDTH	SQ. YDS.
10	31
12	58
9	47
	136

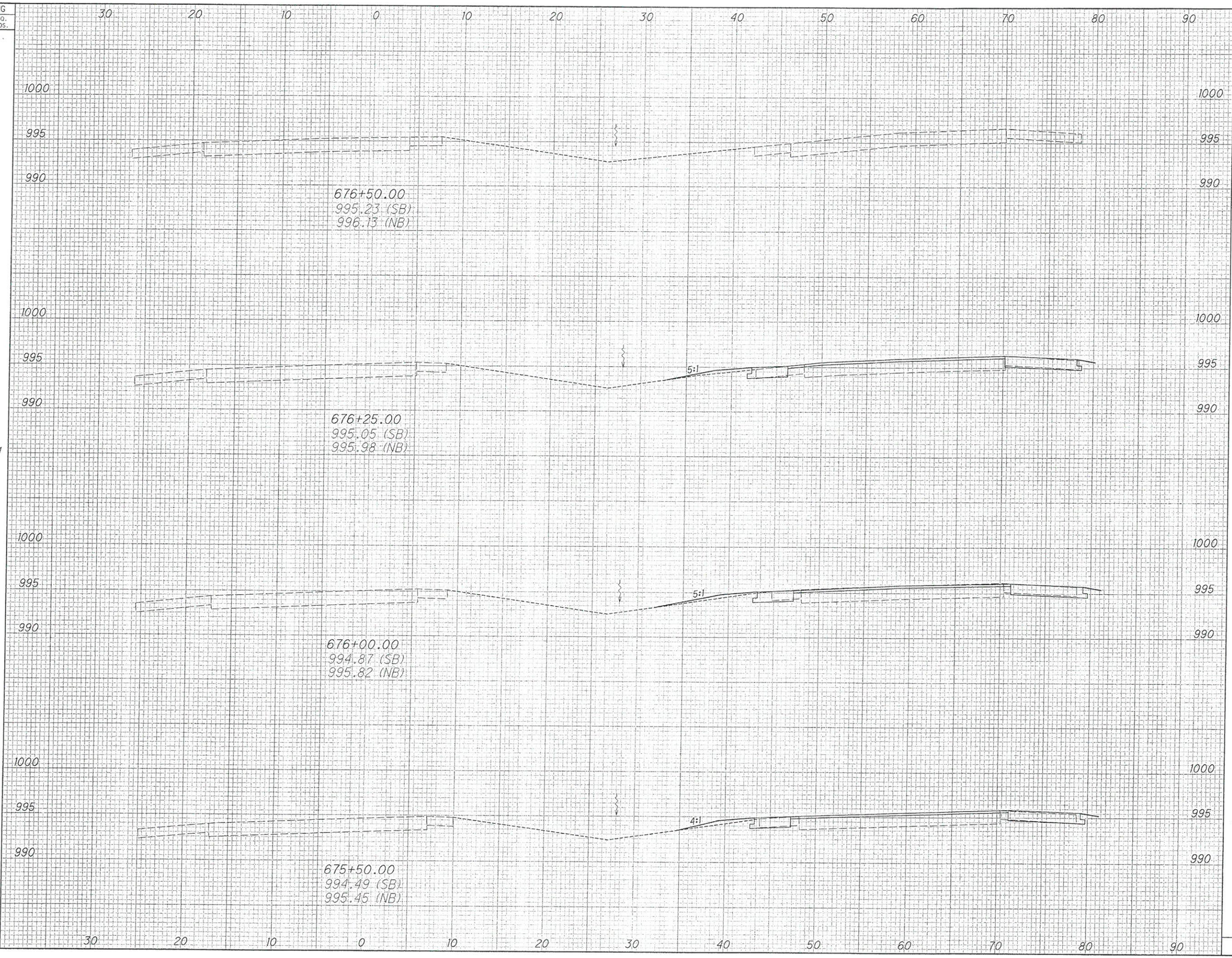

END AREA		VOLUME	
CUT	FILL	CUT	FILL
15	2	14	2
15	2	28	4
15	2	28	16
		70	22

CALCULATED CLP
CHECKED SAN

CROSS SECTIONS

STA. 675+50.00 TO STA. 676+50.00

STA-21-12.48

79
124

H:\Projects\2006\2006-0007 STA-21-12_48 Part 2\Civil\Drawings\Drainage\25433DP001.dgn 2/12/2007 1:46:36 PM

25433DP001.dgn

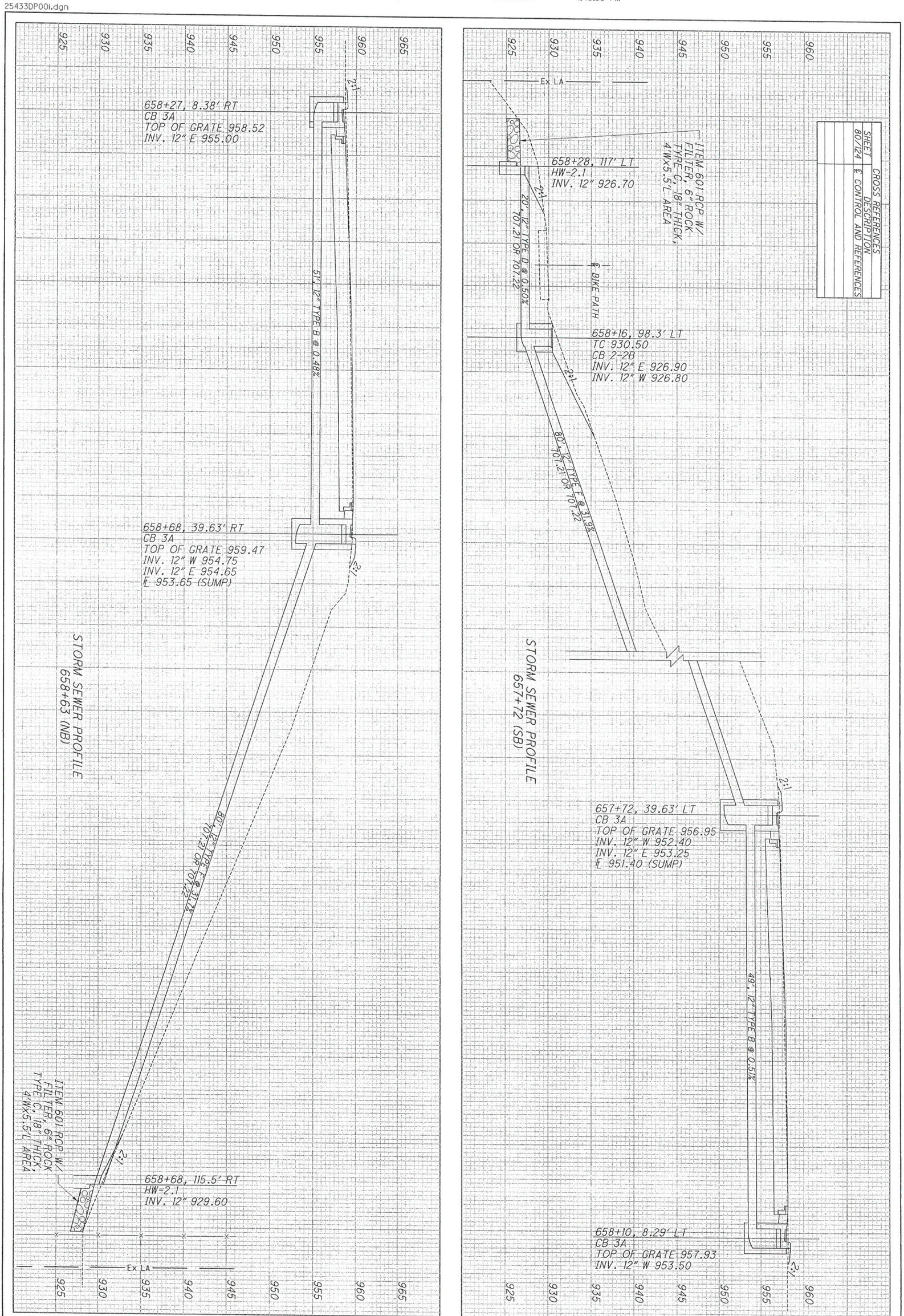

CROSS REFERENCES	
DESCRIPTION	SHEET
℄ CONTROL AND REFERENCES	80/124

80/124

STA-21-12.48

STORM SEWER PROFILES

CALCULATED CLP

CHECKED SAN

ITEM	SHEET NUMBERS															ITEM	ITEM EXT.	TOTAL QUANT.	UNIT	DESCRIPTION	SHEET NUMBER
	82	83																			
630		71.5														630	02100	71.5	FT	GROUND MOUNTED SUPPORT, NO. 2 POST	
630		16.3														630	06100	16.3	FT	GROUND MOUNTED SUPPORT, NO. 6 POST	
630		31.0														630	80100	31.0	SQ FT	SIGN, FLAT SHEET	
630		4														630	84900	4	EACH	REMOVAL OF GROUND MOUNTED SIGN AND DISPOSAL	
630		2														630	86002	2	EACH	REMOVAL OF GROUND MOUNTED POST SUPPORT AND DISPOSAL	
646	3.38															646	10000	3.38	MILE	EDGE LINE	
646	1.65															646	10100	1.65	MILE	LANE LINE	
646	402															646	10300	402	FT	CHANNELZING LINE	
646	36															646	10400	36	FT	STOP LINE	
646	82															646	10800	82	SQ FT	ISLAND MARKING	
646	7															646	20300	7	EACH	LANE ARROW	

CALCULATED LOB
CHECKED MAH

TRAFFIC CONTROL GENERAL SUMMARY

STA-21-12.48

G:\CIVIL\2004054\00\STA\25433\TRAFFIC\SHEETS\25433TC001.DGN
2/6/2007
9:58:36 AM
SVARRECCHIA

SHEET NO.	REFERENCE NO.	LOCATION	STATION FROM	STATION TO	SIDE	646 EDGE LINE (WHITE)	646 EDGE LINE (YELLOW)	646 LANE LINE	646 CHANNELZING LINE	646 STOP LINE	646 ISLAND MARKING	646 LANE ARROW
			FROM	TO		FT	FT	FT	FT	FT	SQ FT	EACH
84	ELW-1	S.R. 21 NB	635+00	642+00	RT.	700						
84	LL-1	S.R. 21 NB	635+00	642+00	RT.			700				
84	ELY-1	S.R. 21 NB	635+00	642+00	RT.		700					
85	ELW-2	S.R. 21 NB	642+00	646+01	RT.	401						
85	ELY-2	S.R. 21 NB	642+00	646+01	RT.		401					
85	LL-2	S.R. 21 NB	642+00	644+00	RT.			200				
85	CL-1	S.R. 21 NB	644+00	646+01	RT.				201			
85	CL-2	S.R. 21 NB	644+00	646+01	RT.				201			
85	LA-1	S.R. 21 NB	644+59		RT.							1
85	LA-2	S.R. 21 NB	645+25		RT.							1
85	LA-3	S.R. 21 NB	645+91		RT.							1
85	LA-4	S.R. 21 NB	644+59		RT.							1
85	LA-5	S.R. 21 NB	645+91		RT.							1
85	LA-6	S.R. 21 NB	644+59		RT.							1
85	LA-7	S.R. 21 NB	645+91		RT.							1
85	SL-1	S.R. 21 NB	646+03		RT.					36		
85	LL-3	S.R. 21 NB	647+38	654+50	RT.			712				
85	ELY-3	S.R. 21 NB	647+38	654+50	RT.		712					
85	ELW-3	S.R. 21 NB	647+38	654+50	RT.	712						
85	ELW-4	S.R. 21 SB	650+00	654+50	LT.	450						
85	ELY-4	S.R. 21 SB	650+00	654+50	LT.		450					
85	LL-4	S.R. 21 SB	650+00	654+50	LT.			450				
85	IMY-1	S.R. 21	647+31		RT.						82	
86	ELW-5	S.R. 21 SB	654+50	667+00	LT.	1250						
86	LL-5	S.R. 21 SB	654+50	667+00	LT.			1250				
86	ELY-5	S.R. 21 SB	654+50	667+00	LT.		1250					
86	ELY-6	S.R. 21 NB	654+50	667+00	RT.		1250					
86	LL-6	S.R. 21 NB	654+50	667+00	RT.			1250				
86	ELW-6	S.R. 21 NB	654+50	667+00	RT.	1250						
87	ELW-7	S.R. 21 SB	667+00	679+50	LT.	1250						
87	LL-7	S.R. 21 SB	667+00	679+50	LT.			1250				
87	ELY-7	S.R. 21 SB	667+00	679+50	LT.		1250					
87	ELW-8	S.R. 21 NB	667+00	677+50	RT.	1050						
87	LL-8	S.R. 21 NB	667+00	677+50	RT.			1050				
87	ELY-8	S.R. 21 NB	667+00	677+50	RT.		1050					
88	ELW-9	S.R. 21 SB	679+50	692+00	LT.	1250						
88	LL-9	S.R. 21 SB	679+50	692+00	LT.			1250				
88	ELY-9	S.R. 21 SB	679+50	692+00	LT.		1250					
89	ELW-10	S.R. 21 SB	692+00	698+00	LT.	600						
89	LL-10	S.R. 21 SB	692+00	698+00	LT.			600				
89	ELY-10	S.R. 21 SB	692+00	698+00	LT.		600					
TOTALS CARRIED TO TRAFFIC CONTROL GENERAL SUMMARY						8913	8913	8712	402	36	82	7
					MILE	3.38		1.65				

PAVEMENT MARKING SUBSUMMARY

CALCULATED LOB
CHECKED MAH

STA-21-12.48

G:\C1V1L\2804854\00\STA\25433\TRAFFIC\SHEETS\25433TS001.DGN
2/6/2007
9:51:05 AM
SVARRECCHIA

SIGNING SUBSUMMARY

CALCULATED LOB
CHECKED MAH

SHEET NO.	REFERENCE NO.	LOCATION	STATION	SIDE	CODE	SIZE (INCHES)	630 GROUND MOUNTED SUPPORT, NO. 2 POST FT	630 GROUND MOUNTED SUPPORT, NO. 6 POST FT	630 SIGN, FLAT SHEET SQ FT	630 REMOVAL OF GROUND MOUNTED SIGN AND DISPOSAL EACH	630 REMOVAL OF GROUND MOUNTED POST SUPPORT AND DISPOSAL EACH
85	S-1	S.R. 21 NB	653+65	RT.	SPECIAL	12"x24"	12.5		2.00		
85	R-1	S.R. 21 NB	653+60		SPECIAL					1	1
86	S-2	S.R. 21 SB	656+75	LT.	M2-1-21	21"x15"		16.25	2.19		
					M1-5-30-3	37.5"x30"			7.81		
					M5-1L-30	30"x24"			5.00		
86	S-3	S.R. 21 NB	658+60	RT.	OM-3L-12	12"x36"	11.00		3.00		
86	S-4	S.R. 21 NB	658+96	RT.	OM-3R-12	12"x36"	11.00		3.00		
86	S-5	S.R. 21 SB	665+68	LT.	OM-3R-12	12"x36"	11.00		3.00		
86	S-5	S.R. 21 SB	666+05	LT.	OM-3L-12	12"x36"	11.00		3.00		
86	R-2	S.R. 21 SB	657+00	LT.	M2-1					1	1
					M1-5-3					1	
					M5-1L					1	
86		S.R. 21 SB			STRUCT. ID	12"x12"	7.5		1.00		
86		S.R. 21 NB			STRUCT. ID	12"x12"	7.5		1.00		
TOTALS CARRIED TO TRAFFIC CONTROL GENERAL SUMMARY							71.5	16.3	31.0	4	2

STA-21-12.48

G:\CIVIL\280405A\00\STA\25433\TRAFFIC\SHEETS\25433TS003.DGN
2/6/2007
9:51:29 AM
SVARRECCHIA

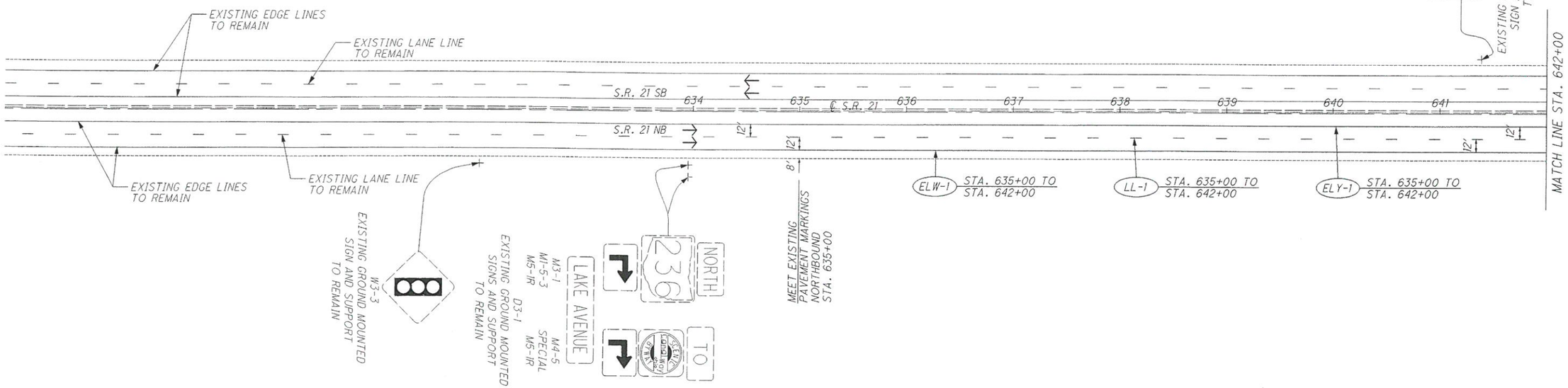

LEGEND			
(LL-#)	LANE LINE	(S-#)	PROPOSED NEW SIGN AND SUPPORT
(ELW-#)	EDGE LINE WHITE	→	TRAFFIC FLOW ARROW
(ELY-#)	EDGE LINE YELLOW	⊥/⊥	GROUND MOUNTED SIGN AND SUPPORT
(CL-#)	CHANNELIZING LINE		EXISTING SIGN TO REMAIN
(IMY-#)	ISLAND MARKING, YELLOW		EXISTING SIGN TO BE REMOVED
(LA-#)	LANE ARROW		PROPOSED SIGN
(SL-#)	STOP LINE		
(R-#)	SIGN AND SUPPORT REMOVAL		

NOTES:
1. ALL PAVEMENT MARKINGS SHALL BE COMPOSED OF ITEM 646-EPOXY MATERIALS.
2. ALL STATION CALLOUTS REFERENCE THE S.R. 21 CENTERLINE OF CONSTRUCTION.

HORIZONTAL SCALE IN FEET
0 25 50 100

CALCULATED SWC
CHECKED MAH

PAVEMENT MARKING AND SIGNING PLAN
S.R. 21 - BEGIN TO STA. 642+00

STA-21-12.48

G:\CIVIL\2004054\00\STA\25433\TRAFFIC\SHEETS\25433TP001.DGN
2/6/2007
9:53:52 AM
SWARRECCHIA

PAVEMENT MARKING AND SIGNING PLAN
S.R. 21 - STA. 642+00 TO STA. 654+50

CALCULATED SWC
CHECKED MAH

HORIZONTAL SCALE IN FEET
0 25 50 100

STA-21-12.48

G:\CIVIL\2084054\00\STA\25433\TRAFFIC\SHEETS\25433TP002.DGN
2/6/2007
9:54:21 AM
SVARRECCHIA

NOTES:
1. ALL PAVEMENT MARKINGS SHALL BE COMPOSED OF ITEM 646-EPOXY MATERIALS.
2. ALL STATION CALLOUTS REFERENCE THE S.R. 21 CENTERLINE OF CONSTRUCTION.

LEGEND

(LL-#) LANE LINE	(S-#) PROPOSED NEW SIGN AND SUPPORT
(ELW-#) EDGE LINE WHITE	→ TRAFFIC FLOW ARROW
(ELY-#) EDGE LINE YELLOW	⊥/⊥ GROUND MOUNTED SIGN AND SUPPORT
(CL-#) CHANNELIZING LINE	EXISTING SIGN TO REMAIN
(IMY-#) ISLAND MARKING, YELLOW	EXISTING SIGN TO BE REMOVED
(LA-#) LANE ARROW	PROPOSED SIGN
(SL-#) STOP LINE	
(R-#) SIGN AND SUPPORT REMOVAL	

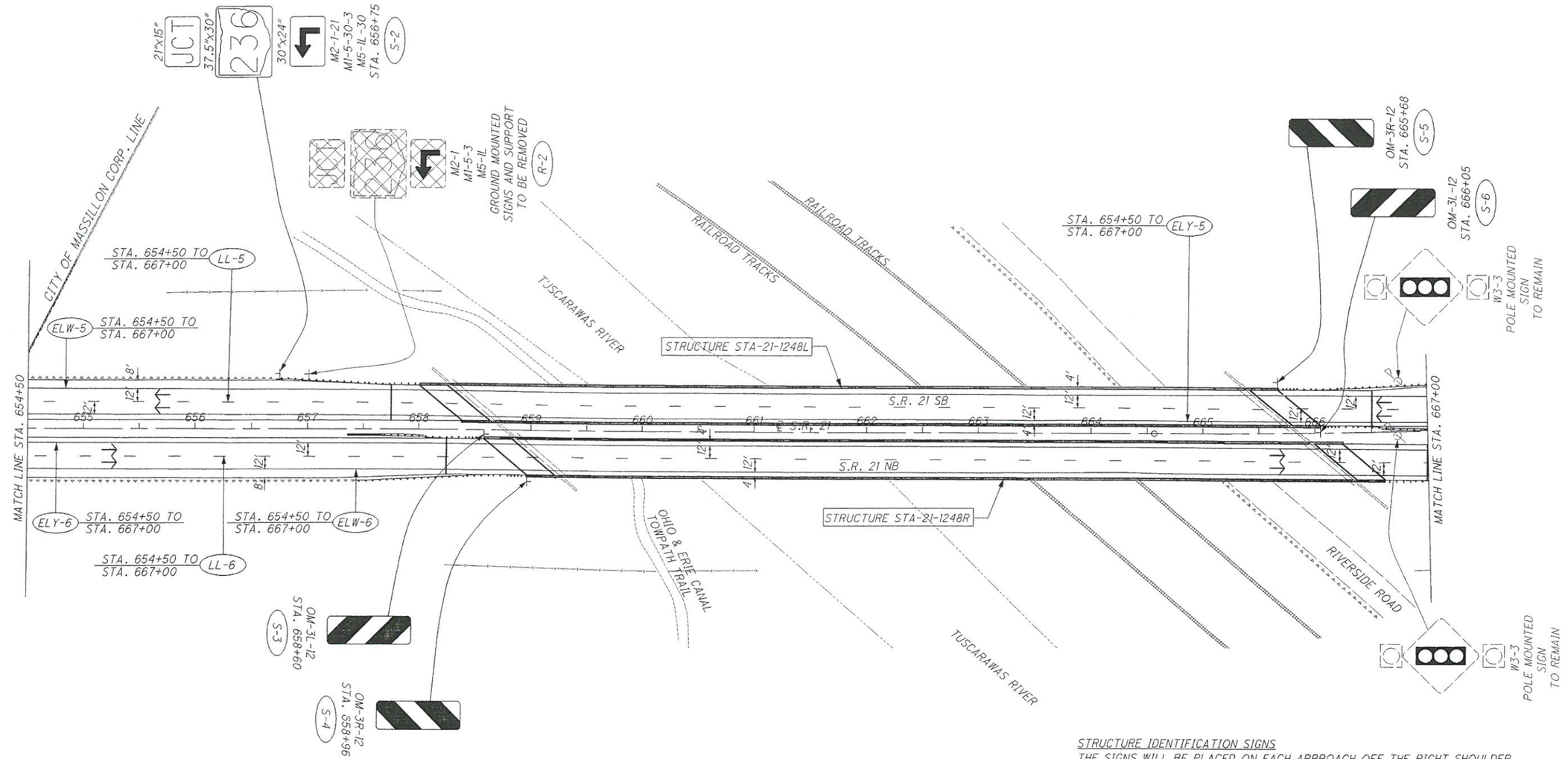

LEGEND

(LL-#) LANE LINE	(S-#) PROPOSED NEW SIGN AND SUPPORT
(ELW-#) EDGE LINE WHITE	→ TRAFFIC FLOW ARROW
(ELY-#) EDGE LINE YELLOW	⊥/⊥⊥ GROUND MOUNTED SIGN AND SUPPORT
(CL-#) CHANNELIZING LINE	EXISTING SIGN TO REMAIN
(IMY-#) ISLAND MARKING, YELLOW	EXISTING SIGN TO BE REMOVED
(LA-#) LANE ARROW	PROPOSED SIGN
(SL-#) STOP LINE	
(R-#) SIGN AND SUPPORT REMOVAL	

NOTES:
1. ALL PAVEMENT MARKINGS SHALL BE COMPOSED OF ITEM 646-EPOXY MATERIALS.
2. ALL STATION CALLOUTS REFERENCE THE S.R. 21 CENTERLINE OF CONSTRUCTION.

STRUCTURE IDENTIFICATION SIGNS

THE SIGNS WILL BE PLACED ON EACH APPROACH OFF THE RIGHT SHOULDER, FACING TRAFFIC, AND BEHIND THE GUARDRAIL IF APPLICABLE. A QUANTITY OF ONE SIGN PER APPROACH WILL BE INSTALLED.

STRUCTURE IDENTIFICATION SIGNS SHALL BE 12"x12" ALUMINUM AND HAVE A NON-REFLECTIVE WHITE SHEETING BACKGROUND. LETTERS SHALL BE BLACK, 3" IN HEIGHT, SERIES C STROKE WIDTH, AND SILK SCREENED AS PER 730.22. THE FIRST LINE WILL BE THE THREE LETTER COUNTY DESIGNATION, THE SECOND WILL BE THE ROUTE NUMBER, AND THE THIRD LINE WILL BE STRAIGHT LINE MILEAGE. SPACING BETWEEN LINES OF TEXT SHALL BE ¾". SIGNS SHALL BE BOLTED USING TWO 5/16" ALUMIMUM BOLTS, 2½" IN LENGTH, AND TWO 5/16" NUTS. TWO ⅜" DIAMETER HOLES WILL BE DRILLED, ONE ⅜" FROM THE TOP AND ONE ⅜" FROM THE BOTTOM OF THE SIGN, AT THE VERTICAL CENTERLINE OF THE SIGN.

THE SIGNS WILL BE MOUNTED ON NEW NO. 2 POSTS AND WILL BE INSTALLED AS PER STANDARD CONSTRUCTION DRAWING TC-41.20, MOST CURRENT REVISION. EACH POST WILL BE 7.5' IN LENGTH.

INSTALL SIGNS FOR THE FOLLOWING STRUCTURES:
STA-21-1248

THE FOLLOWING QUANTITIES HAVE BEEN INCLUDED FOR EACH APPROACH:
ITEM 630 - SIGN, FLAT SHEET, 1 SQ. FT.
ITEM 630 - GROUND MOUNTED SUPPORT, NO. 2 POST, 7.5 FT.

A TOTAL OF 2 INSTALLATIONS ARE REQUIRED FOR THIS PROJECT. QUANTITIES HAVE BEEN CARRIED TO THE SIGNING SUBSUMMARY.

HORIZONTAL SCALE IN FEET
0 25 50 100

CALCULATED SWC
CHECKED MAH

PAVEMENT MARKING AND SIGNING PLAN
S.R. 21 - STA. 654+50 TO STA. 667+00

STA-21-12.48

86
124

G:\CIVIL\2004654\00\STA\25433\TRAFFIC\SHEETS\25433TP003.DGN
2/6/2007
9:54:48 AM
SWARRECCHIA

G:\CIVIL\2004054\00\STA\25433\TRAFFIC\SHEETS\25433TP004.DGN
2/6/2007
9:55:09 AM
SVARRECCHIA

LEGEND

(LL-#)	LANE LINE
(ELW-#)	EDGE LINE WHITE
(ELY-#)	EDGE LINE YELLOW
(CL-#)	CHANNELIZING LINE
(MY-#)	ISLAND MARKING, YELLOW
(LA-#)	LANE ARROW
(SL-#)	STOP LINE
(R-#)	SIGN AND SUPPORT REMOVAL
(S-#)	PROPOSED NEW SIGN AND SUPPORT
↓	TRAFFIC FLOW ARROW
⊥/⊥	GROUND MOUNTED SIGN AND SUPPORT
	EXISTING SIGN TO REMAIN
	EXISTING SIGN TO BE REMOVED
	PROPOSED SIGN

NOTES: 1. ALL PAVEMENT MARKINGS SHALL BE COMPOSED OF ITEM 646-EPOXY MATERIALS.

2. ALL STATION CALLOUTS REFERENCE THE S.R. 21 CENTERLINE OF CONSTRUCTION.

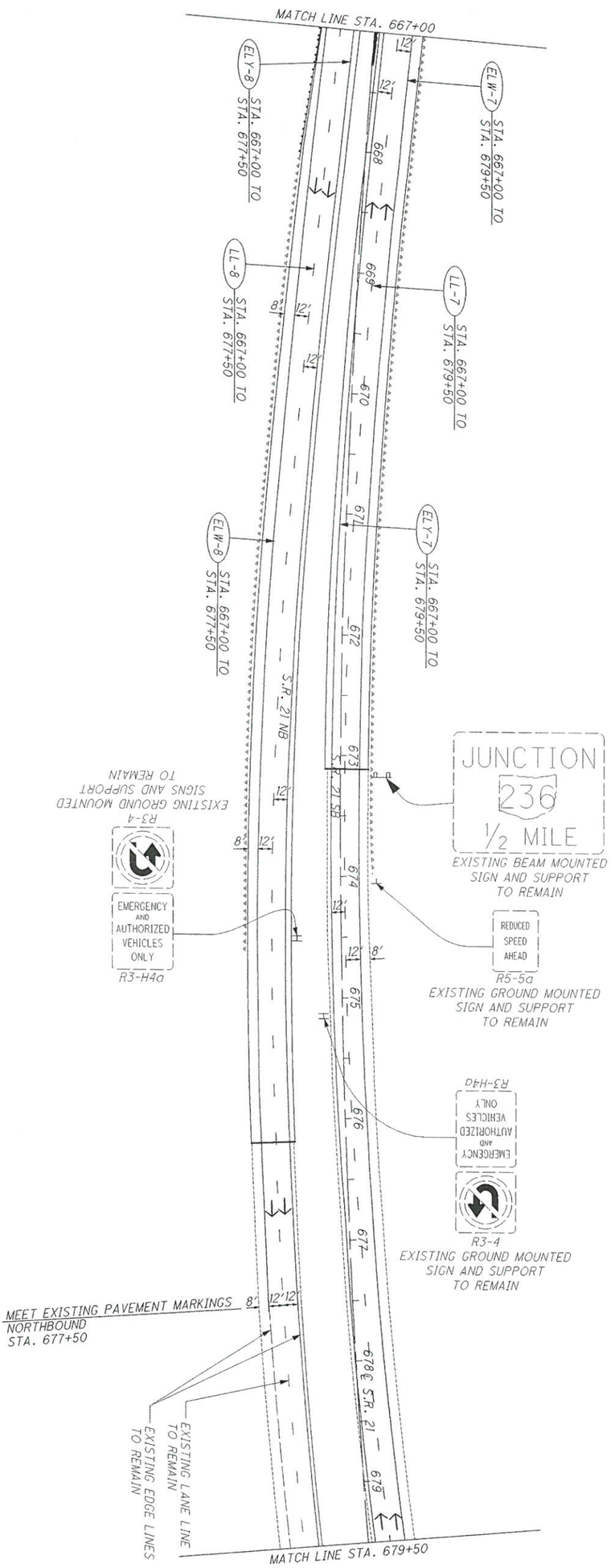

87 / 124	STA-21-12.48	PAVEMENT MARKING AND SIGNING PLAN S.R. 21 - STA. 667+00 TO STA. 679+50	CALCULATED SWC CHECKED MAH	0 50 25 100 HORIZONTAL SCALE IN FEET

G:\CIVIL\2004054\00\STA\25433\TRAFFIC\SHEETS\25433TP005.DGN
2/6/2007
9:55:27 AM
SVARRECCHIA

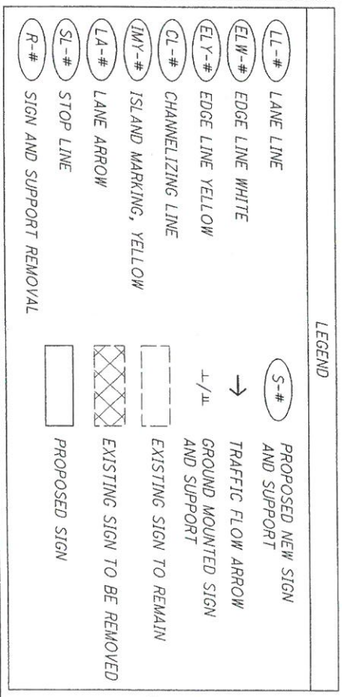

NOTES: 1. ALL PAVEMENT MARKINGS SHALL BE COMPOSED OF ITEM 646-EPOXY MATERIALS.

2. ALL STATION CALLOUTS REFERENCE THE S.R. 21 CENTERLINE OF CONSTRUCTION.

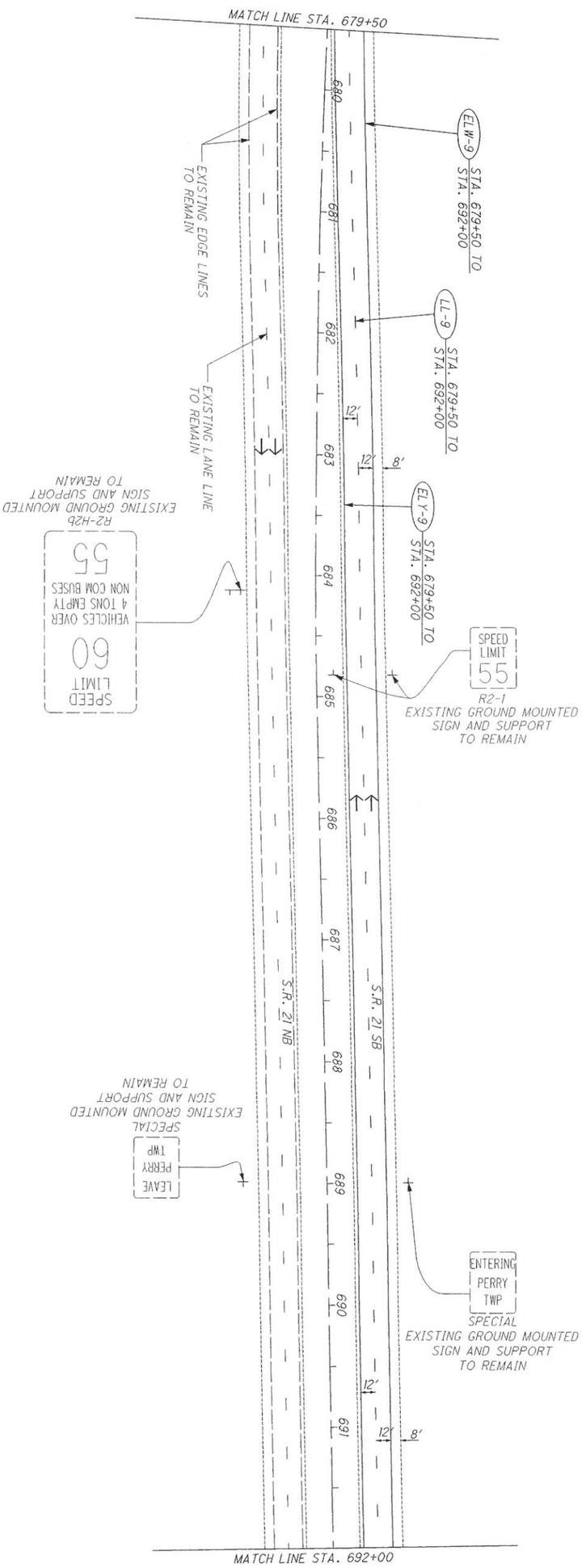

88/124	STA-21-12.48	PAVEMENT MARKING AND SIGNING PLAN S.R. 21 - STA. 679+50 TO STA. 692+00	CALCULATED SWC CHECKED MAH	0 50 25 100 HORIZONTAL SCALE IN FEET

D:\CIVIL\2004054\00\STA\25433\TRAFFIC\SHEETS\25433TP006.DGN
2/6/2007
9:55:42 AM
SVARRECCHIA

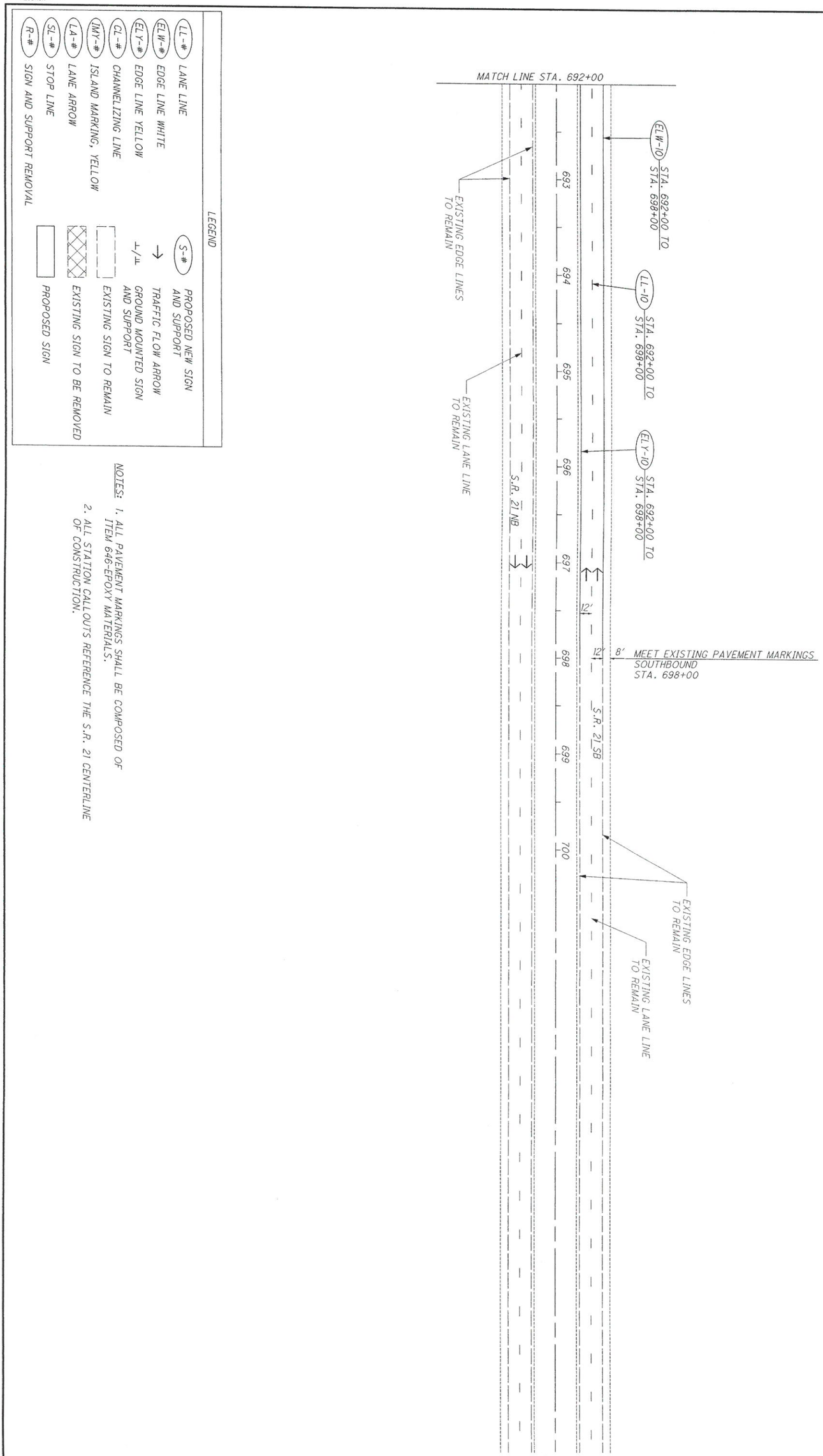

NOTES:
1. ALL PAVEMENT MARKINGS SHALL BE COMPOSED OF ITEM 646-EPOXY MATERIALS.
2. ALL STATION CALLOUTS REFERENCE THE S.R. 21 CENTERLINE OF CONSTRUCTION.

89
124

STA-21-12.48

PAVEMENT MARKING AND SIGNING PLAN

S.R. 21 - STA. 692+00 TO END

CALCULATED SWC
CHECKED MAH

0 50
25 100
HORIZONTAL SCALE IN FEET

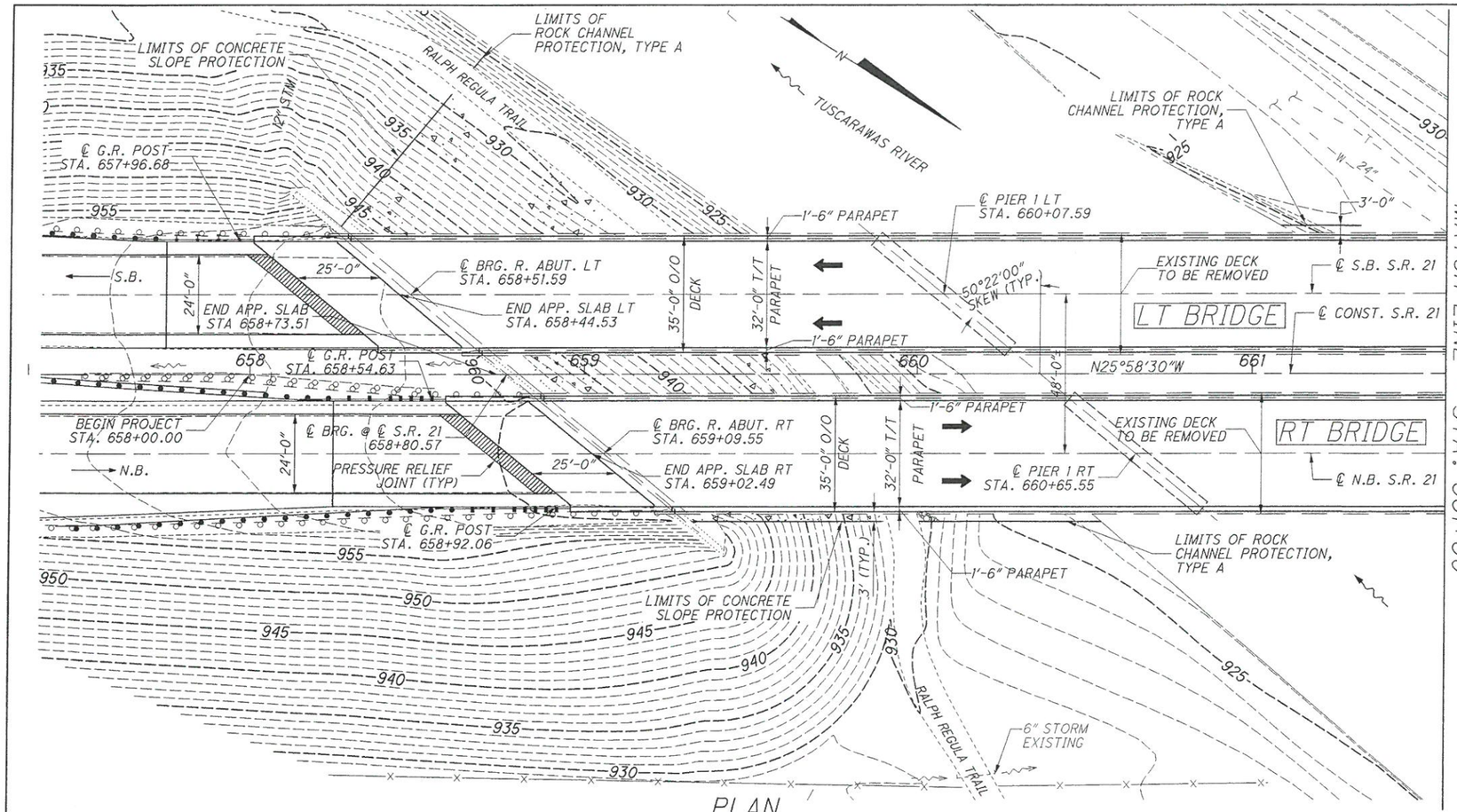

PLAN

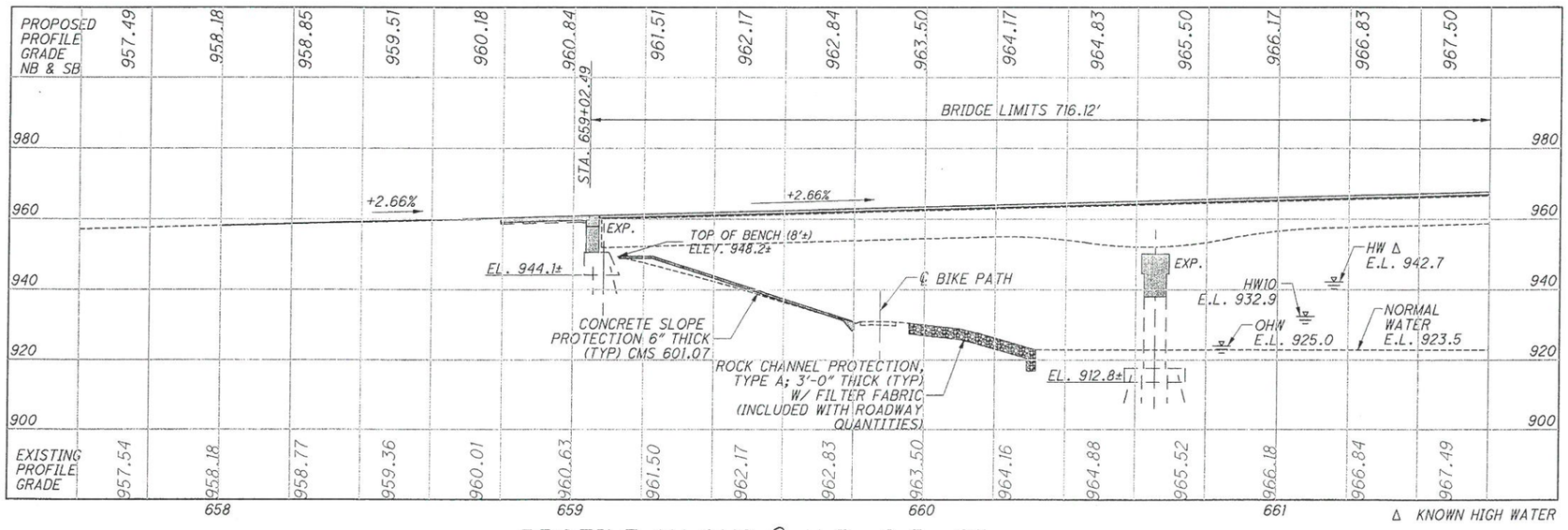

PROFILE (ALONG ℄ N.B. S.R. 21)

BENCHMARK DATA

BM Y305 STA.664+63, ELEV. 938.32, OFFSET 31.88', RIGHT VERTICALLY SET BRASS DISK IN PIER WALL.

BM # 2 STA. 666+51, ELEV. 980.46, OFFSET 0.30', RIGHT IRON PIN SET

FOR ADDITIONAL BENCHMARK INFORMATION. SEE ROADWAY PLAN SHEETS (63/124) & (65/124) & (67/124)

NOTES

EARTHWORK LIMITS SHOWN ARE APPROXIMATE. ACTUAL SLOPES SHALL CONFORM TO PLAN CROSS SECTIONS.

DESIGN TRAFFIC:
2007 ADT = 12200 2007 ADTT = 1830
2027 ADT = 15700 2027 ADTT = 2355
DIRECTIONAL DISTRIBUTION = 60%

HYDRAULIC DATA (TAKEN FROM EXISTING PLANS)

DRAINAGE AREA = 426 SQ. MILES WATERWAY AREA = 1640 SQ. FT.
Q (50) = 26000 CFS HW10 = 932.9 HW KNOWN = 942.70

EXISTING STRUCTURE

TYPE: TWIN BRIDGE, CONTINUOUS RIVETED STEEL GIRDER W/ REINFORCED CONCRETE DECK AND SUBSTRUCTURE UNITS.

SPANS: 156'-0"; 2 @ 195'-0"±; 156'-0"± C/C BRG
ROADWAY: 33'-6" TOE/TOE PARAPET
LOADING: CF-2000
SKEW: 50°22'00"± R.F.
APPROACH SLABS: 25'± (AS-1-54)
ALIGNMENT: TANGENT
CROWN: NORMAL
STRUCTURAL FILE NUMBER: 7600488L/7600518R
DATE BUILT: 1957; SDC OVERLAY 1989
CONDITION: FAIR

PROPOSED STRUCTURE

PROPOSED WORK:
NEW HPC MIX 4 COMPOSITE REINFORCED CONC. DECK ON EXISTING RIVETED GIRDERS. NEW BACKWALLS AND PIER CAPS ON EXISTING SUBSTRUCTURE UNITS. NEW MODULAR EXP. JOINTS AT ABUTMENTS, NEW APPROACH SLABS AND PATCHING SUBSTRUCTURE CONC. REPLACE IN KIND ABUTMENT BEARINGS, REFURBISH AND RESET PIER BEARINGS, REMOVE PACK RUST, CAULK AND PAINT WITH OZEU SYSTEM.

STRUCTURE TYPE:
FOUR-SPAN CONTINUOUS RIVETED STEEL GIRDER WITH COMPOSITE CONCRETE DECK ON CONCRETE SUBSTRUCTURE UNITS.

SPANS: 156'-0"±; 2 @ 195'-0"±; 156'-0"± C/C BRG.
ROADWAY: 32'-0" TOE/TOE SINGLE SLOPE PARAPET;
LOADING: HS25 CASE II AND ALTERNATE MILITARY
SKEW: 50°22'00"± R.F. 60 PSF FUTURE WEARING SURFACE
APPROACH SLABS: 25'-0" LONG (AS-1-81)
ALIGNMENT: TANGENT
CROWN: NORMAL
COORDINATES: LATITUDE 40°49'00" N
LONGITUDE 81°31'50" W

DESIGN AGENCY
KORDA
KORDA/RICHARD ENGINEERING
3500 WATERMARK DRIVE, SUITE 220
AUSTINTOWN, OHIO 44515 PH: (330) 797-9991
FAX: (614) 457-3351 WEB: www.kordarichard.com

DATE 7/27/06
REVIEWED RWE
STRUCTURE FILE NUMBER 7600488L/7600518R
DRAWN JM
REVISED
DESIGNED CLB
CHECKED JKS

RIGHT BRIDGE STA. 659+02.49 STA. 666+18.61
LEFT BRIDGE STA. 658+44.53 STA. 665+60.65

SITE PLAN
BRIDGE NO.: STA-21-1248 L & R
OVER TUSCARAWAS RIVER, R.J. CORMAN R.R. AND T.R. 353

STA-21-12.48
PID No. 25433

1 / 34

90 / 124

H:\Projects\2006\2006-0007 STA-21-12.48 Part 2\Structural-Bridge\Drawings\001_021_1248LSP001.dgn
2:04:33 PM
2/12/2007
001_021_1248LSP001.dgn

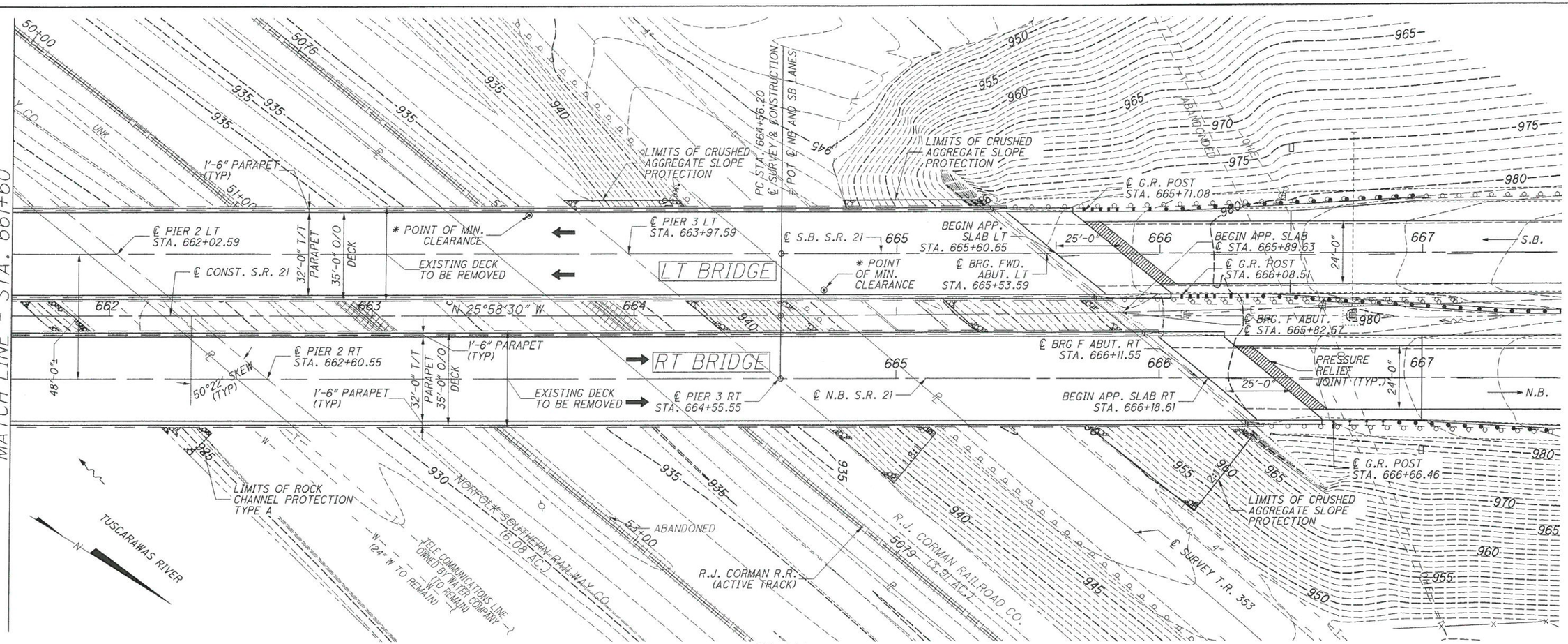

PLAN

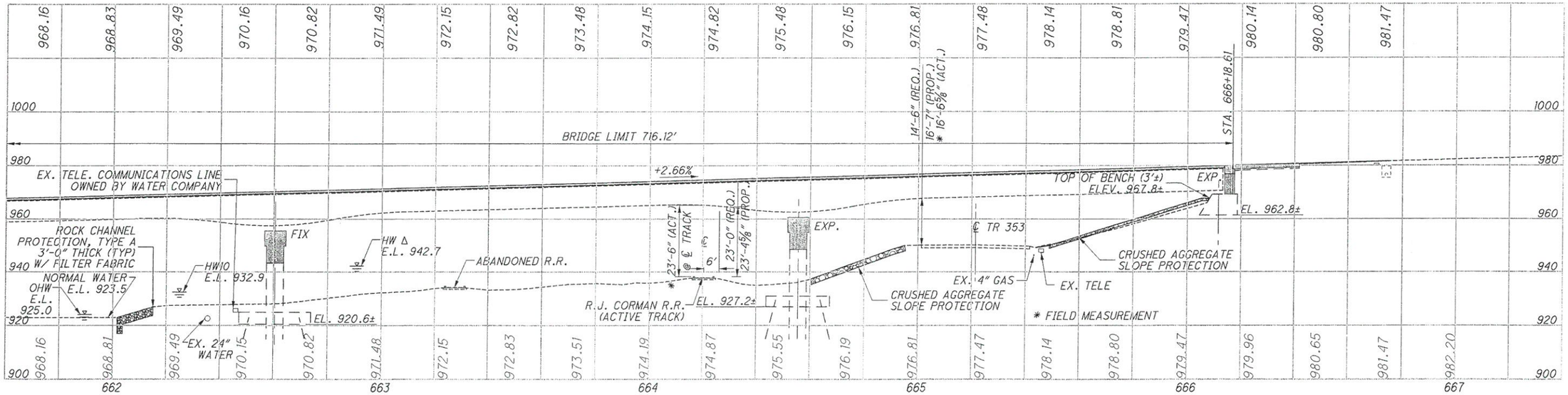

PROFILE (ALONG ℄ N.B. S.R. 21)

DESIGN AGENCY
KORDA
KORDA/NEMETH ENGINEERING
1650 WATERMARK DRIVE, SUITE 200
COLUMBUS, OHIO 43215-1094
WEB www.korda.com
TEL (614) 487-9650
FAX (614) 487-9881

DESIGNED	DRAWN	REVIEWED	DATE
CLB	JM	RWE	7/27/06
CHECKED	REVISED	STRUCTURE FILE NUMBER	
JKS		7600488L/7600518R	

RIGHT BRIDGE
STA. 659+02.49
STA. 666+18.61

LEFT BRIDGE
STA. 658+44.53
STA. 665+60.65

SITE PLAN
BRIDGE NO.: STA-21-1248 L & R
OVER TUSCARAWAS RIVER, R.J.
CORMAN R.R. AND T.R. 353

STA-21-12.48
PID No. 25433

H:\Projects\2006\2006-0007 STA-21-12.48 Part 2\Structural-Bridge\Drawings\002_021_1248LSP002.dgn 2/12/2007 2:04:24 PM
002_021_1248LSP002.dgn

STRUCTURE GENERAL NOTES

REFER TO THE FOLLOWING STANDARD BRIDGE DRAWINGS:

AS-1-81	REVISED	07-19-02
SBR-1-99	REVISED	07-19-02

AND TO THE FOLLOWING SUPPLEMENTAL SPECIFICATIONS:

843	DATED	04-18-03
845	DATED	01-19-07

DESIGN SPECIFICATIONS:

THIS STRUCTURE CONFORMS TO "STANDARD SPECIFICATIONS FOR HIGHWAY BRIDGES" ADOPTED BY THE AMERICAN ASSOCIATION OF STATE HIGHWAY AND TRANSPORTATION OFFICIALS, 2002, 17TH EDITION, AND THE ODOT BRIDGE DESIGN MANUAL.

DESIGN LOADING:

HS25, CASE II AND THE ALTERNATE MILITARY LOADING FOR THE SUPERSTRUCTURE AND PIER CAPS. HS-20 FOR THE SUBSTRUCTURE UNITS, EXCEPT PIER CAPS.

FUTURE WEARING SURFACE (FWS) OF 60 POUNDS PER SQUARE FOOT.

DESIGN DATA (LOAD FACTOR DESIGN FOR SUPERSTRUCTURE AND PIER CAPS):

CLASS HP CONCRETE - COMPRESSIVE STRENGTH 4500 PSI (SUPERSTRUCTURES, PARAPETS, AND APPROACH SLABS)

CLASS HP CONCRETE - COMPRESSIVE STRENGTH 4000 PSI (PIER CAPS AND ABUTMENT BACKWALLS)

REINFORCING STEEL - ASTM A615 OR A996, GRADE 60, MINIMUM YIELD STRENGTH 60,000 PSI

STRUCTURAL STEEL - A709 GRADE 36-YIELD STRENGTH 36,000 PSI FOR STRUCTURAL STEEL ITEMS REPLACED AND ASTM A325 HIGH STRENGTH BOLTS FOR RIVET REPLACEMENTS.

DECK PROTECTION METHOD:

EPOXY COATED REINFORCING STEEL, 2-1/2" CONCRETE COVER

MONOLITHIC WEARING SURFACE:

MONOLITHIC WEARING SURFACE IS ASSUMED, FOR DESIGN PURPOSES, TO BE 1 INCH THICK.

ITEM 202, PORTIONS OF STRUCTURE REMOVED OVER 20 FOOT SPAN, AS PER PLAN:

REMOVE ABUTMENT BACKWALLS TO ELEVATION OF BEAM SEAT CONSTRUCTION JOINT. REMOVE PIER CAPS TO TOP OF PIER STEM CONSTRUCTION JOINT.

DESCRIPTION: THIS WORK CONSISTS OF THE REMOVAL OF CONCRETE DECKS INCLUDING PARAPETS, DECK JOINTS AND OTHER APPURTENANCES FROM STEEL SUPPORTING SYSTEMS (GIRDERS, CROSS FRAMES, ETC.). THE PROVISIONS OF ITEM 202 APPLY EXCEPT AS SPECIFIED BY THE FOLLOWING NOTES. PERFORM WORK CAREFULLY DURING DECK REMOVALS TO PROTECT PORTIONS OF SUCH SYSTEMS THAT ARE TO BE SALVAGED AND INCORPORATED INTO THE PROPOSED STRUCTURE. THE USE OF EXPLOSIVES, HEADACHE BALLS AND/OR HOE RAM TYPE OF EQUIPMENT IS PROHIBITED. SUBMIT CONSTRUCTION PLANS AND CALCULATIONS ACCORDING TO CMS 501.05.

PROTECTION OF STEEL SUPPORT SYSTEMS: BEFORE DECK SLAB CUTTING IS PERMITTED, DRAW THE OUTLINE OF PRIMARY STEEL MEMBERS IN CONTACT WITH THE BOTTOM OF THE DECK ON THE SURFACE OF DECK. DRILL SMALL DIAMETER PILOT HOLES 2 INCHES OUTSIDE THESE LINES TO CONFIRM THE LOCATION OF FLANGE EDGES. DECK CUTS OVER OR WITHIN 2 INCHES OF FLANGE EDGES SHALL NOT EXTEND LOWER THAN THE BOTTOM LAYER OF DECK SLAB REINFORCING STEEL. CUTS MADE OUTSIDE 2 INCHES OF FLANGE EDGES MAY EXTEND THE FULL DEPTH OF THE DECK. PERFORM WORK CAREFULLY DURING CUTTING OF THE DECK SLAB TO AVOID DAMAGING STEEL MEMBERS THAT ARE TO BE INCORPORATED INTO THE PROPOSED STRUCTURE. REPLACE OR REPAIR STEEL MEMBERS DAMAGED BY THE DECK SLAB CUTTING OPERATIONS AT NO COST TO THE PROJECT. AT LEAST 7 DAYS BEFORE PERFORMING REPAIR WORK, SUBMIT A PROPOSED REPAIR PLAN, DEVELOPED BY AN OHIO REGISTERED PROFESSIONAL ENGINEER TO THE DIRECTOR. OBTAIN THE DIRECTOR'S APPROVAL BEFORE PERFORMING REPAIR.

REMOVAL METHODS: THE CONTRACTOR MAY REMOVE CONCRETE BY CUTTING AND BY MEANS OF HAND OPERATED PNEUMATIC HAMMERS EMPLOYING POINTED OR BLUNTED CHISEL TYPE TOOLS. FOR REMOVALS OVER STRUCTURAL MEMBERS (STEEL GIRDERS) THE CONTRACTOR MAY USE A HAMMER HEAVIER THAN 35 POUNDS BUT NOT TO EXCEED 90 POUNDS UNLESS APPROVED BY THE ENGINEER. REMOVAL METHODS OVER STRUCTURAL MEMBERS SHALL ENSURE ADEQUATE DEPTH CONTROL AND PREVENT NICKING OR GOUGING THE PRIMARY STRUCTURAL MEMBERS.

DUE TO THE POSSIBLE PRESENCE OF ATTACHMENTS (E.G., FINISHING MACHINE, SCUPPER AND FORM SUPPORTS, ETC.) TO EXISTING STRUCTURAL MEMBERS, PERFORM WORK CAREFULLY DURING DECK REMOVAL TO AVOID DAMAGING STRUCTURAL MEMBERS THAT ARE TO REMAIN. REPLACE OR REPAIR STRUCTURAL MEMBERS DAMAGED BY THE REMOVAL OPERATIONS AT NO COST TO THE PROJECT. AT LEAST 7 DAYS BEFORE PERFORMING REPAIR WORK, SUBMIT A PROPOSED REPAIR PLAN, DEVELOPED BY AN OHIO REGISTERED PROFESSIONAL ENGINEER TO THE DIRECTOR. OBTAIN THE DIRECTOR'S APPROVAL BEFORE PERFORMING REPAIR.

EXISTING WELDED ATTACHMENTS: REMOVE EXISTING WELDED ATTACHMENTS (E.G., FINISHING MACHINE AND FORM SUPPORTS; AND SUPPORTS FOR SCUPPERS WHICH ARE TO BE REMOVED) LOCATED IN THE DESIGNATED TENSION PORTIONS OF THE TOP FLANGES OF EXISTING STEEL MEMBERS AND GRIND THE FLANGE SURFACES SMOOTH. CAREFULLY GRIND PARALLEL TO THE FLANGES.

EXISTING STRUCTURE PLANS: THE ORIGINAL DESIGN PLANS AND THE REHABILITATION PLANS SHALL BE EXAMINED BY PROSPECTIVE BIDDERS AT THE OFFICES OF ODOT, DISTRICT 4, 2088 SOUTH ARLINGTON STREET, AKRON, OHIO. THE CONTRACTOR SHALL FAMILIARIZE HIMSELF WITH THE DRAWINGS.

CUT LINE CONSTRUCTION JOINT PREPARATION: SAW CUT BOUNDARIES OF PROPOSED CONCRETE REMOVALS 1 INCH DEEP. REMOVE CONCRETE TO A ROUGH SURFACE. LEAVE THE EXISTING REINFORCING STEEL, IF REQUIRED IN THE PLANS, IN PLACE. INSTALL DOWEL BARS IF SPECIFIED. PRIOR TO CONCRETE PLACEMENT ABRASIVELY CLEAN JOINT SURFACES AND EXISTING EXPOSED REINFORCEMENT TO REMOVE LOOSE AND DISINTEGRATED CONCRETE AND LOOSE RUST. THOROUGHLY CLEAN THE JOINT SURFACE AND EXPOSED REINFORCEMENT OF ALL DIRT, DUST, RUST OR OTHER FOREIGN MATERIAL BY THE USE OF WATER, AIR UNDER PRESSURE, OR OTHER METHODS THAT PRODUCE SATISFACTORY RESULTS. EXISTING REINFORCING STEEL DOES NOT HAVE TO HAVE A BRIGHT STEEL FINISH, BUT REMOVE ALL PACK AND LOOSE RUST. THOROUGHLY DRENCH EXISTING CONCRETE SURFACES WITH CLEAN WATER AND ALLOW TO DRY TO A DAMP CONDITION BEFORE PLACING CONCRETE.

SUBSTRUCTURE CONCRETE REMOVAL: REMOVE CONCRETE BY MEANS OF APPROVED PNEUMATIC HAMMERS EMPLOYING POINTED AND BLUNT CHISEL TOOLS. HYDRAULIC HOE- RAM TYPE HAMMERS WILL NOT BE PERMITTED. THE WEIGHT OF THE HAMMER SHALL NOT BE MORE THAN 35 POUNDS FOR REMOVAL WITHIN 18 INCHES OF PORTIONS TO BE PRESERVED. OUTSIDE THE 18 INCH LIMIT, THE CONTRACTOR MAY USE HAMMERS NOT EXCEEDING 90 POUNDS UPON THE APPROVAL OF THE ENGINEER. DO NOT PLACE PNEUMATIC HAMMERS IN DIRECT CONTACT WITH REINFORCING STEEL THAT IS TO BE RETAINED IN THE REBUILT STRUCTURE.

EXISTING STRUCTURE VERIFICATION: DETAILS AND DIMENSIONS SHOWN ON THESE PLANS PERTAINING TO THE EXISTING STRUCTURE HAVE BEEN OBTAINED FROM PLANS OF THE EXISTING STRUCTURE AND FROM FIELD OBSERVATIONS AND MEASUREMENTS. CONSEQUENTLY, THEY ARE INDICATIVE OF THE EXISTING STRUCTURE AND THE PROPOSED WORK BUT THEY SHALL BE CONSIDERED TENTATIVE AND APPROXIMATE. THE CONTRACTOR IS REFERRED TO CMS SECTIONS 102.05, 105.02 AND 513.04.

BASE CONTRACT BID PRICES UPON A RECOGNITION OF THE UNCERTAINTIES DESCRIBED ABOVE AND UPON A PRE BID EXAMINATION OF THE EXISTING STRUCTURE. HOWEVER, THE DEPARTMENT WILL PAY FOR ALL PROJECT WORK BASED UPON ACTUAL DETAILS AND DIMENSIONS WHICH HAVE BEEN VERIFIED IN THE FIELD.

DEMOLITION OVER RAILROADS: THE CONTRACTOR SHALL SUBMIT PLANS AND PROCEDURES FOR THE PROPOSED DEMOLITION OF STRUCTURES OVER RAILROAD PROPERTIES, AS PER CMS 501.05. THIS SUBMITTAL SHALL INCLUDE THE METHOD FOR PROTECTING THE TRACK FROM ACCIDENTAL DROPPING OF CONCRETE. CONCRETE SHALL NOT BE ALLOWED TO INTENTIONALLY FALL OR DROP ONTO THE RAILWAY PROPERTY.

A TEMPORARY VERTICAL CLEARANCE OF 20 FEET FROM THE TOP OF RAIL AND A TEMPORARY HORIZONTAL CLEARANCE OF 12 FEET FROM THE CENTERLINE OF THE TRACK MUST BE MAINTAINED AT ALL TIMES TO ANY FORM WORK, FALSE WORK OR OTHER TEMPORARY OBSTRUCTION DURING CONSTRUCTION OF THIS BRIDGE.

PROTECTION OF VEHICULAR, BIKEPATH AND CANOE TRAFFIC:
SEE MAINTENANCE OF TRAFFIC NOTE SHEETS 10 & 11 OF 124.

MEASUREMENT & PAYMENT: THE DEPARTMENT WILL MEASURE THE QUANTITY OF REMOVALS ON A LUMP SUM BASIS. THE DEPARTMENT WILL PAY FOR THE ACCEPTED QUANTITIES OF REMOVALS AT THE CONTRACT PRICE FOR ITEM 202, PORTIONS OF STRUCTURE REMOVED, OVER 20 FOOT SPAN, AS PER PLAN.

DESIGN AGENCY
KORDA
KORDA/NEMETH ENGINEERING
1650 WATERMARK DRIVE, SUITE 200
COLUMBUS, OHIO 43215-1094
WEB www.korda.com
TEL (614) 487-1650
FAX (614) 487-1651

DESIGNED	DRAWN	REVIEWED	DATE
CAB	CAB	RWE	7/21/06
CHECKED	REVISED	STRUCTURE FILE NUMBER	
JKS		7600488L/7600518R	

GENERAL NOTES
BRIDGE NO.: STA-21-1248 L & R
OVER TUSCARAWAS RIVER, R.U. CORMAN R.R. AND T.R.353

STA-21-12.48
PID No. 25433

H:\Projects\2006\2006-0007 STA-21-12_48 Part 2\Structural-Bridge\Drawings\003_02LI248LGN00I.dgn
2/2/2007 2:04:18 PM
003_02LI248LGN00I.dgn

ITEM 509 REINFORCING STEEL, REPLACEMENT OF EXISTING REINFORCING STEEL, AS PER PLAN: REPLACE ALL EXISTING REINFORCING BARS DEEMED BY THE ENGINEER TO BE UNUSABLE BECAUSE OF CORROSION. THE DEPARTMENT WILL MEASURE THE REPLACEMENT REINFORCING STEEL BY THE NUMBER OF POUNDS ACCEPTED IN PLACE.

REPLACE ALL EXISTING REINFORCING STEEL BARS WHICH ARE TO BE INCORPORATED INTO THE NEW WORK AND ARE DEEMED BY THE ENGINEER TO BE MADE UNUSABLE BY CONCRETE REMOVAL OPERATIONS WITH NEW EPOXY COATED REINFORCING STEEL OF THE SAME SIZE AT NO COST TO THE DEPARTMENT.

ITEM 511 - CLASS HP CONCRETE, AS PER PLAN
THE PROVISIONS OF ITEM 511 SHALL APPLY EXCEPT AS NOTED BELOW.

MIX OPTIONS:
ALL SUPERSTRUCTURE, BRIDGE DECK, SIDEWALK, APPROACH SLABS AND PARAPET CONCRETE SHALL BE THIS MIX (HP4, AS PER PLAN). THE FOLLOWING PROPORTIONS WILL BE USED AS A STARTING MIX DESIGN.

CONCRETE TABLE
QUANTITIES PER CUBIC YARD
AGGREGATES (SSD)
MIX 4, AS PER PLAN, (GGBF SLAG + MICROSILICA)

AGG TYPE	FINE AGG (LB)	#8 COARSE AGG (LB) *	#57 COARSE AGG (LB) *	TOTAL (LB)	CEMENT CONTENT (LB)	GGBF SLAG (LB)	MICRO SILICA (LB)	MAX WATER TO CEMENTITIOUS RATIO	AIR CONTENT ± 2%
GRAVEL	1370	650	790	2810	440	190	30	0.42	6
LIMESTONE	1370	655	800	2820	440	190	30	0.42	6
SLAG	1370	570	695	2635	440	190	30	0.42	6

* ALL COARSE AGGREGATE SHALL HAVE AN ABSORPTION OF 1.00% OR GREATER AS DEFINED PER ASTM C127

BASIS OF PAYMENT:
PAYMENT FOR THE ABOVE COMPLETED AND ACCEPTED QUANTITIES WILL BE MADE AT THE CONTRACT BID PRICE FOR:
ITEM 511 - CLASS HP CONCRETE, BRIDGE DECK, AS PER PLAN, CU YD
ITEM 511 - CLASS HP CONCRETE, BRIDGE DECK (PARAPET), AS PER PLAN, CU YD
ITEM 511 - CLASS HP CONCRETE, SUBSTRUCTURE, AS PER PLAN, CU YD
ITEM 511 - CLASS HP CONCRETE, TEST SLAB, LUMP

ITEM 513 - STRUCTURAL STEEL MEMBERS, LEVEL UF, AS PER PLAN:
ALL REQUIREMENTS OF 513 APPLY TO SHOP FABRICATED MEMBERS. PERFORM WORK FOR FIELD FABRICATED MEMBERS ACCORDING TO ITEM 513, EXCEPT AS MODIFIED HEREIN. THE DEPARTMENT WILL NOT REQUIRE THE CONTRACTOR PERFORMING FIELD FABRICATION TO BE PRE-QUALIFIED AS SPECIFIED IN SUPPLEMENT 1078. SUBMIT A WRITTEN LETTER OF MATERIAL ACCEPTANCE, 501.06, TO THE ENGINEER. PROVIDE SHOP DRAWINGS ACCORDING TO 513.04 OR SUPPLY THE ENGINEER WITH "AS- BUILT" DRAWINGS MEETING 513.04 AFTER COMPLETION OF FIELD FABRICATION. THE ENGINEER WILL REVIEW THE SUBMITTED DRAWINGS FOR CONCURRENCE WITH THE FINAL AS- BUILT CONDITION. IF NECESSARY, THE ENGINEER MAY CONTACT THE OFFICE OF STRUCTURAL ENGINEERING FOR TECHNICAL ASSISTANCE. IF THE ENGINEER IS SATISFIED WITH THE "AS- BUILT" DRAWINGS AND THE DELIVERED MATERIALS, SUPPLY A COPY OF THE DRAWINGS, STAMPED AND DATED, ALONG WITH MICROFILM, TO THE STRUCTURAL, WELDING AND METALS SECTION OF THE OFFICE OF MATERIAL MANAGEMENT FOR RECORD PURPOSES.

CONTRACTOR TO REPLACE THE DAMAGED END CROSSFRAMES AT ABUTMENTS. REMOVAL INCLUDED FOR PAYMENT IN ITEM 202, PORTIONS OF STRUCTURE REMOVED, OVER 20' SPAN, AS PER PLAN

THE FOLLOWING MEMBERS ARE INCLUDED IN THIS ITEM: MISC., CROSS-FRAMES, STIFFENERS, AND PLATES.

ITEM 514 - FIELD PAINTING STRUCTURAL STEEL
30% WAS ADDED TO THE NOMINAL MEASUREMENT OF STRUCTURAL STEEL TO ACCOUNT FOR INCIDENTALS. REFER TO CMS 514.23.

ITEM 516 - REFURBISH AND RESET BEARING DEVICES, AS PER PLAN:
THIS ITEM SHALL INCLUDE ALL WORK NECESSARY TO PROPERLY ALIGN BRIDGE BEARINGS AS WELL AS THEIR CLEANING AND PAINTING. INCLUDED SHALL BE THE DISASSEMBLY OF THE BEARINGS, HAND TOOL CLEANING (GRINDING IF NECESSARY), PAINTING ACCORDING TO ITEM 514, REPLACEMENT OF ANY DAMAGED SHEET LEAD WITH PREFORMED BEARING PADS (711.21), INSTALLATION OF NEW ANCHOR BOLTS, INSTALLATION OF ANY NECESSARY STEEL SHIMS OF THE SAME SIZE AS THE BEARINGS TO PROVIDE A SNUG FIT, REALIGNMENT OF THE UPPER BEARING PLATE BY REMOVING EXISTING WELDS AND REWELDING SO THAT THE BEARINGS ARE VERTICALLY ALIGNED AT 60 DEGREES F, LUBRICATING SLIDING SURFACES, AND REASSEMBLY OF THE BEARINGS. ASSURE ALL BEARINGS ARE SHIMMED ADEQUATELY AND THAT NO GIRDERS AND/OR BEARING DEVICES ARE "FLOATING". AT NO ADDITIONAL COST TO THE STATE, THE CONTRACTOR MAY INSTALL NEW BEARINGS OF THE SAME TYPE AS THE EXISTING IN PLACE OF REFURBISHING THE BEARINGS. ALL WORK SHALL BE TO THE SATISFACTION OF THE ENGINEER. PAYMENT FOR ALL OF THE ABOVE DESCRIBED LABOR AND MATERIALS WILL BE MADE AT THE CONTRACT PRICE BID FOR ITEM 516 - REFURBISH BEARING DEVICES, AS PER PLAN.

ITEM 516, JACKING AND TEMPORARY SUPPORT OF SUPERSTRUCTURE, AS PER PLAN:

THIS WORK CONSISTS OF RAISING OR RE- POSITIONING EXISTING GIRDERS TO THE DIMENSIONS AND REQUIREMENTS DEFINED IN THE PROJECT PLANS.

SUBMIT CONSTRUCTION PLANS IN ACCORDANCE WITH CMS 501.05.

IF, DURING THE JACKING OPERATIONS, DAMAGE TO THE STRUCTURE IS VISUALLY OBSERVED, IMMEDIATELY CEASE THE JACKING OPERATION AND INSTALL SUPPORTS TO THE SATISFACTION OF THE ENGINEER. ANALYZE THE DAMAGE AND SUBMIT A METHOD OF CORRECTION TO THE ENGINEER FOR APPROVAL. THE DEPARTMENT WILL NOT PAY FOR THE COST OF REQUIRED REPAIRS. THE BRIDGE BEARINGS SHALL BE FULLY SEATED AT ALL CONTACT AREAS. IF FULL SEATING IS NOT ATTAINED, SUBMIT A REPAIR PLAN TO THE ENGINEER. THE DEPARTMENT WILL NOT PAY FOR THE REPAIR COSTS TO ENSURE FULL SEATING ON BEARINGS.

THE DEPARTMENT WILL MEASURE THIS WORK ON A LUMP SUM BASIS.

THE DEPARTMENT WILL PAY FOR THE ACCEPTED QUANTITIES AT THE CONTRACT PRICE FOR ITEM 516, JACKING AND TEMPORARY SUPPORT OF SUPERSTRUCTURE, AS PER PLAN.

ITEM 526 - REINFORCED CONCRETE APPROACH SLABS, AS PER PLAN
THE PROVISIONS OF CMS 526 SHALL APPLY EXCEPT AS NOTED BELOW. CLASS HP CONCRETE, MIX 4, AS PER PLAN, SHALL BE THE ONLY MIX DESIGN OPTION. THE PROPORTIONS FOR THE STARTING MIX DESIGN SHALL BE AS SHOWN FOR ITEM 511 - CLASS HP CONCRETE, AS PER PLAN.

ITEM 601 - CONCRETE SLOPE PROTECTION:
EXISTING SLOPES AT THE ABUTMENTS SHALL BE REBUILT WITH 6" THICK CONCRETE TO SLOPES AS SHOWN ON SITE PLAN.

ITEM 843 - PATCHING CONCRETE STRUCTURES, WITH TROWELABLE MORTAR, AS PER PLAN:
PRIOR TO THE SURFACE CLEANING SPECIFIED IN SS843.05 AND WITHIN 24 HOURS OF PLACING PATCHING MATERIAL, BLAST CLEAN ALL SURFACES TO BE PATCHED INCLUDING THE EXPOSED REINFORCING STEEL. ACCEPTABLE METHODS INCLUDE HIGH- PRESSURE WATER BLASTING WITH OR WITHOUT ABRASIVES IN THE WATER, ABRASIVE BLASTING WITH CONTAINMENT, OR VACUUM ABRASIVE BLASTING.

ITEM 845 FIELD METALLIZING EXISTING STRUCTURAL STEEL:
THIS ITEM IS SHOWN AS AN ALTERNATE TO ITEM 514 FIELD PAINTING OF STRUCTURAL STEEL.

BRIDGE REHABILITATION PROCEDURE (PROPOSED)
FOR PHASE I & IV SEE MAINTENANCE OF TRAFFIC PLAN SHEET 7/124.

SEQUENCE OF REHABILITATION WORK:

PHASE II (LEFT BRIDGE)

- MAINTAIN SR-21 TRAFFIC ONTO RIGHT BRIDGE USING CROSS- OVER CONSTRUCTION METHOD
- REMOVE THE EXISTING DECK, APPROACH SLABS AND ABUTMENT BACKWALLS
- JACK AND TEMPORARILY SUPPORT GIRDERS ON TEMPORARY SUPPORT SYSTEM AT ABUTMENTS AND PIERS
- REMOVE AND REPLACE PIER CAPS
- REMOVE AND REPLACE ABUTMENT BEARINGS IN KIND
- CLEAN, PAINT OR METALLIZE, AND RESET PIER BEARINGS
- LOWER AND RESET GIRDERS ON BEARINGS
- CONSTRUCT THE NEW DECK AND BACKWALLS AT ABUTMENTS
- REMOVE PACK RUST, REPAIR AND/OR REPLACE DEFECTIVE STRUCTURAL STEEL MEMBERS AND RIVETS
- SURFACE PREPARATION, PAINT PRIME AND INTERMEDIATE COAT USING OZEU PAINT SYSTEM, OR METALLIZE ALL STRUCTURAL STEEL MEMBER SURFACES
- CAULK ALL PACK- RUST CLEANED AREAS OF STEEL GIRDER PLATE LOCATIONS
- PAINT FINISH COAT USING OZEU PAINT SYSTEM
- INSTALL MODULAR EXPANSION JOINT SYSTEM AT ABUTMENTS
- PLACE NEW APPROACH SLABS
- PLACE NEW PARAPETS ON DECK AND APPROACH SLABS
- SEAL CONCRETE SURFACES USING EPOXY- URETHANE SEALER

PHASE III (RIGHT BRIDGE)

- MAINTAIN SR-21 TRAFFIC ONTO LEFT BRIDGE USING CROSS- OVER CONSTRUCTION METHOD
- REPEAT SEQUENCE OF REHABILITATION WORK FOR RIGHT BRIDGE

NOTE: AT THE OPTION OF CONTRACTOR AND AFTER APPROVAL BY THE ENGINEER AN ALTERNATE SEQUENCE OF CONSTRUCTION CAN BE USED TO PERFORM PROPOSED REHABILITATION WORK

DESIGN AGENCY
KORDA
KOREA/AMERITH ENGINEERING
6100 WATERWAY DRIVE, SUITE 200
SYLVANIA, OHIO 43560
WEB www.korda.com
TEL (866) 487-1600
FAX (866) 487-1601

DESIGNED	DRAWN	REVIEWED	DATE
CAB	CAB	RWE	7/27/06
CHECKED	REVISED	STRUCTURE FILE NUMBER	
JKS		7600488L/7600518R	

GENERAL NOTES
BRIDGE NO.: STA-21-1248 L & R
OVER TUSCARAWAS RIVER, R.J. CORMAN R.R. AND T.R.353

STA-21-12.48
PID No. 25433

4 / 34

93
124

H:\Projects\2006\2006-0007 STA-21-12_48 Part 2\Structural-Bridge\Drawings\004_021_1248LGN002.dgn
2:04:15 PM 2/12/2007
004_021_1248LGN002.dgn

ABBREVIATIONS:

ABUT.	- ABUTMENT	MIN.	- MINIMUM
APP.	- APPROACH	MISC.	- MISCELLANEOUS
B/B	- BOTTOM TO BOTTOM	M.O.T.	- MAINTENANCE OF TRAFFIC
BOT	- BOTTOM	N.B.	- NORTH BOUND
BRG.	- BEARING	N-E	- NORTHEAST
BTW.	- BETWEEN	N-W	- NORTHWEST
C/C	- CENTER TO CENTER	N.S.	- NEAR SIDE
C.J.	- CONSTRUCTION JOINT	NTS.	- NOT TO SCALE
C.I.P.	- CAST IN PLACE	O/O	- OUT TO OUT
℄	- CENTERLINE	PCB	- PORTABLE CONCRETE BARRIER
CLR.	- CLEARANCE	PEJF	- PREFORMED EXPANSION JOINT FILLER
CONST.	- CONSTRUCTION		
DWG.	- DRAWING	P.G.	- PROFILE GRADE
E.F.	- EACH FACE	R.ABUT & R.A.	- REAR ABUTMENT
EL.	- ELEVATION		
EXP.	- EXPANSION	R.F.	- RIGHT FORWARD
EQ. SPA.	- EQUAL SPACES	R.R.	- RIGHT REAR
E.W.	- EACH WAY	RT.	- RIGHT
EXIST. & EX.	- EXISTING	S.B.	- SOUTH BOUND
		S.R.	- STATE ROUTE
F.ABUT & F.A.	- FORWARD ABUTMENT	S-E	- SOUTHEAST
		S-W	- SOUTHWEST
F.P.	- FORWARD PIER	SER	- SERIES
F.S.	- FAR SIDE	SHLDR	- SHOULDER
FWD.	- FORWARD	SPA.	- SPACES
GR.	- GROUND	SPL	- SPLICE
G.R.	- GUARDRAIL	STA.	- STATION
HORIZ.	- HORIZONTAL	STD.	- STANDARD
H.W.	- HIGH WATER	T/B	- TOP OF BENCH
JT.	- JOINT	T/S	- TOP OF SLOPE
L.F.	- LEFT FORWARD	T&B	- TOP AND BOTTOM
L.R.	- LEFT REAR	TYP.	- TYPICAL
LT.	- LEFT	U.N.O.	- UNLESS NOTED OTHERWISE
		WW	- WINGWALL

H:\Projects\2006\2006-0007 STA-21-12.48 Part 2\Structural-Bridge\Drawings\005_021_1248LGN003.dgn
2/12/2007 2:04:12 PM
005_021_1248LGN003.dgn

DESIGN AGENCY
KORDA
KORDA/DIMETH ENGINEERING
6500 WATERMARK DRIVE, SUITE 200
COLUMBUS, OHIO 43235-9691
WEB www.korda.com
TEL (614) 487-1650
FAX (614) 487-1651

DESIGNED	DRAWN	REVIEWED	DATE
CAB	CAB	RWE	7/27/06
CHECKED	REVISED	STRUCTURE FILE NUMBER	
JKS		7600488L/7600518R	

GENERAL NOTES AND ABBREVIATIONS

BRIDGE NO.: STA-21-1248 L & R
OVER TUSCARAWAS RIVER, R.J. CORMAN R.R. AND T.R.353

STA-21-12.48
PID No. 25433

MODULAR EXPANSION JOINT NOTES

ITEM 513 STRUCTURAL STEEL MEMBERS, MODULAR EXPANSION JOINT, LEVEL UF, AS PER PLAN

A. DESCRIPTION

1. FURNISH ALL MATERIALS, SERVICES, LABOR, TOOLS, EQUIPMENT AND INCIDENTALS NECESSARY TO DESIGN, FABRICATE, INSPECT, TEST AND INSTALL MODULAR EXPANSION JOINTS IN ACCORDANCE WITH THE PLANS AND THESE NOTES. ALL REQUIREMENTS OF 513, UF LEVEL FABRICATION APPLY, UNLESS MODIFIED BY THESE NOTES.

B. DESIGN

1. PREPARE AND CHECK THE DESIGN UNDER THE AUTHORITY OF AN OHIO REGISTERED PROFESSIONAL ENGINEER. THE REGISTERED ENGINEER SHALL SEAL, SIGN, AND DATE THE DESIGN CALCULATIONS AND SHOP DRAWINGS. MODULAR JOINTS AND THEIR SUPPORTS SHALL BE DESIGNED FOR AASHTO HS 25 LOADING WITH 100 % IMPACT.

2. INCLUDE DESIGN CALCULATIONS WITH THE CONTRACTOR'S SUBMISSION OF SHOP DRAWINGS PER 513.06. THE DESIGN CALCULATIONS SHALL SHOW THAT THE DEVICE CAN MEET THE IMPACT AND FATIGUE DESIGN REQUIREMENTS.

3. PROVIDE A DETAILED INSTALLATION PROCEDURE AND INCLUDE ANY SPECIFIC MANUFACTURER'S NOTES NECESSARY FOR COMPLETION OF THE WORK.

4. DESIGN AND TEST THE MODULAR JOINT COMPONENTS, JOINT ARMOR, AND ANCHORAGES ACCORDING TO THE NATIONAL COOPERATIVE HIGHWAY RESEARCH PROGRAM (NCHRP) REPORT # 402 APPENDIX A AND B.

5. DESIGN TEMPORARY AND FIELD CONNECTIONS TO THE BRIDGE TO ACCOMMODATE ADJUSTMENTS FOR ROADWAY GEOMETRY AND VARYING TEMPERATURE.

6. DESIGN FOR THE PLAN SPECIFIED MOVEMENT FOR A COLD CLIMATE AS SPECIFIED BY 2002 AASHTO STANDARD SPECIFICATIONS FOR HIGHWAY BRIDGES SECTION 3.16.

7. SUPPLY SUPPORT BAR BEARINGS TO TRANSFER THE LOAD FROM THE SUPPORT BARS TO THE JOINT ARMOR.

8. SUPPLY EQUALIZATION SPRINGS TO COUNTER THE COMPRESSION FORCES FROM THE SEALING ELEMENTS AND MAINTAIN EQUAL EXPANSION PROPERTIES FOR EACH SEALING ELEMENT ACROSS THE JOINT.

9. SUPPLY CONTROL SPRINGS WHICH WORK LONGITUDINALLY TO MAINTAIN EQUIDISTANT SPACING BETWEEN TRANSVERSE SEPARATION BEAMS.

10. SUPPLY SEPARATION BEAMS/TRANSVERSE DIVIDERS/CENTER BEAMS TO LIMIT TOTAL HORIZONTAL MOVEMENT IN ANY INDIVIDUAL STRIP SEAL.

11. SUPPLY A STRIP SEAL TYPE SEAL CONNECTED TO MATCHING RETAINERS CONNECTED TO THE JOINT ARMOR AND THE SEPARATION BEAMS. DO NOT EXCEED 3.15 INCHES OF TOTAL HORIZONTAL MOVEMENT IN ANY INDIVIDUAL STRIP SEAL.

12. SUPPLY REMOVABLE AND REPLACEABLE NEOPRENE SEALS, SUPPORT BAR, BEARINGS AND EQUALIZATION SPRINGS.

13. SET SEALS AND RETAINERS 1/8" LOWER THAN THE ROADWAY SURFACE.

14. DESIGN AND FABRICATE THE MODULAR JOINT AS A CONTINUOUS FULL LENGTH MEMBER WITHOUT FIELD SPLICES, UNLESS PHASED CONSTRUCTION OR EXCESSIVE LENGTHS (GREATER THAN 70'-0") PROHIBITS MONOLITHIC FABRICATION.

15. SUPPLY A SLIDING STEEL COVER PLATE AT SIDEWALKS.

16. SPACING OF SUPPORT BEAMS SHALL BE LIMITED TO 4'-0" CENTERS UNDER MAIN LOAD BEARING BEAMS UNLESS FATIGUE TESTING OF THE ACTUAL WELDING CONNECTION DETAILS HAS BEEN PERFORMED TO SHOW THAT A GREATER SPACING IS ACCEPTABLE. THE FATIGUE CYCLES SHOULD BE 2,000,000+ TRUCK LOAD CYCLES OR TRUCK TRAFFIC COUNT OVER THE EXPECTED LIFE OF THE STRUCTURE.

C. MATERIALS

1. SUPPLY STRUCTURAL STEEL MEETING ASTM A709 GRADE 50. SUPPLY SEPARATION BEAMS/ TRANSVERSE DIVIDERS/ CENTER BEAMS, EDGE BEAMS AND JOINT ARMOR MEETING CHARPY V NOTCH IMPACT REQUIREMENTS PER ASTM A709, TABLE S1.2, ZONE 2 TEMPERATURE RANGE. SUPPLY TUBE SECTIONS MEETING ASTM A501 OR A500 GRADE B.

2. SUPPLY ASTM A240, TYPE 304 STAINLESS STEEL, 13 GAGE MINIMUM THICKNESSES WITH NO. 8 FINISH FOR SLIDING SURFACES IN CONTACT WITH PTFE.

3. SUPPLY TESTING AND REPORTS BY THE MANUFACTURER OR AN INDEPENDENT TESTING LABORATORY FOR ALL ELASTOMERIC, PTFE, URETHANE AND PREFORMED FABRIC MATERIALS USED IN ALL BEARINGS AND SPRINGS. THE SUBMISSION OF MATERIAL CERTIFICATION AND TESTING DATA SHALL BE PER 513.08. THESE MATERIALS SHALL BE TESTED ACCORDING TO THE NATIONAL COOPERATIVE HIGHWAY RESEARCH PROGRAM (NCHRP) REPORT #402 APPENDIX A GUIDELINE FOR DURABILITY TESTING OF SPRINGS AND BEARINGS FOR MBEJ.

4. SUPPLY STRIP SEALS CONFORMING TO ASTM D5973. SUBMIT CERTIFIED TEST DATA PER 513.08 FROM THE MANUFACTURER OR AN ACCREDITED LABORATORY. D5973 SECTION 8, LOT SIZE IS ONE SAMPLE PER JOINT. A SAMPLE IS A PIECE 4 FEET LONG WITH ALL MANUFACTURES' MARKINGS. THE SEAL AND RETAINER ARE AN INTEGRAL SYSTEM SUPPLIED BY ONE MANUFACTURER.

5. SEAL RETAINERS: EXTRUDE, HOT ROLL OR MACHINE, STEEL RETAINERS INTO A SOLID SHAPE. RETAINERS MANUFACTURED FROM BENT PLATE OR BUILT UP PIECES ARE NOT ACCEPTABLE. THE INTERNAL DIMENSIONS OF THE RETAINER SHALL BE SPECIFIED BY THE MANUFACTURER TO ACHIEVE POSITIVE SEAL ANCHORAGE.

6. SEPARATION BEAMS/TRANSVERSE DIVIDERS/CENTER BEAMS SHALL BE A SOLID, NON WELDED MACHINED OR EXTRUDED STEEL SECTION.

7. LUBRICANT - ADHESIVE. ONE PART MOISTURE CURING POLYURETHANE COMPOUND MEETING THE REQUIREMENTS OF ASTM D4070 AND AS SPECIFIED BY THE SEAL MANUFACTURER.

8. HARDWARE SHALL BE ASTM A325 TYPE ONE, GALVANIZED OR A449 GALVANIZED.

D. FABRICATION

1. THE MODULAR JOINTS SHALL BE FABRICATED ACCORDING TO 513. THE FABRICATOR SHALL BE PRE-QUALIFIED 513 LEVEL UF FABRICATORS

2. SHOP ASSEMBLED THE MODULAR JOINT WITH ALL COMPONENTS EXCEPT, NEOPRENE SEALS, PER 513.24 EXCEPT THAT FULL ASSEMBLY IS REQUIRED WITH PHASED CONSTRUCTION.

3. SEALS SHALL BE ONE CONTINUOUS PIECE THROUGH THE TOTAL LENGTH OF THE ABUTMENTS.

4. JOINTS IN RETAINERS: WELDS ARE WATER TIGHT, PARTIAL PENETRATION WELDS AROUND THE OUTER PERIPHERY OF THE ABUTTING SURFACES. MAKE SLICES ONLY IN COMPRESSION ZONES OF THE JOINT ARMOR. GRIND FLUSH ALL WELDS IN CONTACT WITH THE SEAL AND JOINT ARMOR. DO NOT USE SHORT PIECES OF RETAINERS LESS THAN 6'-0" LONG, UNLESS REQUIRED AT CURBS OR SIDEWALKS. DO NOT PROVIDE ADDITIONAL SPLICES IN RETAINERS AT CURB OR SIDEWALK SECTIONS OTHER THAN REQUIRED FOR GEOMETRY.

5. SHOP OR FIELD WELDS OF CENTER BEAMS AND JOINT ARMOR, SHALL BE COMPLETE PENETRATION WELDS, GROUND TO PROVIDE SMOOTH TRANSITIONS AND BE 100% ULTRASONICALLY TESTED PER AASHTO/AWS D1.5 BRIDGE WELDING CODE, WITH TENSION ACCEPTANCE CRITERIA, WITNESSED BY THE DEPARTMENT.

6. THE SEPARATION BEAMS/TRANSVERSE DIVIDERS/CENTER BEAMS TO SUPPORT BAR CONNECTIONS SHALL BE COMPLETE PENETRATION WELDS, GROUND TO PROVIDE SMOOTH TRANSITIONS AND BE 100% ULTRASONICALLY TESTED PER AASHTO/AWS BRIDGE WELDING CODE, WITH TENSION ACCEPTANCE CRITERIA, WITNESSED BY THE DEPARTMENT.

7. TEMPORARY SUPPORTS: FABRICATOR DESIGNED AND INSTALLED SUPPORTS ARE REQUIRED TO SUPPORT SHIPPING, ERECTION AND CONSTRUCTION FORCES WITHOUT DAMAGE TO THE STEEL ARMOR OR COATINGS. THESE SUPPORTS SHALL BE ADJUSTABLE FOR FIELD TEMPERATURE SETTING.

E. COATING

1. GALVANIZE OR METALIZE ALL STEEL SURFACES AND COMPONENTS, EXCEPT AT STAINLESS STEEL AND PTFE SLIDING SURFACES. THESE COATINGS MAY BE MIXED ON ONE ASSEMBLY, IF ALL SIMILAR COMPONENTS OF THE ASSEMBLY HAVE THE SAME COATING TYPE.

2. PROVIDE A GALVANIZED COATING PER ASTM A123, WITH A MINIMUM THICKNESS OF 4 MILS. CLEAN EXCESSIVE GALVANIZING AS NECESSARY TO ACHIEVE MECHANICAL MOVEMENT AND SEAL INSTALLATION.

3. PROVIDE A METALIZED COATING PER SOCIETY FOR PROTECTIVE COATINGS (SSPC) SPECIFICATION SSPC-CS23.00 (MARCH 17, 2003) FOR THERMAL SPRAY METALLIC COATINGS. THE COATING SHALL BE A MINIMUM OF 8 MILS THICK. THE METALIZING WIRE SHALL BE 100% ZINC. AREAS OF STRUCTURAL STEEL THAT ARE IN CONTACT WITH CAST-IN-PLACE CONCRETE SHALL HAVE AN ADDITIONAL COATING. THE COATING SHALL BE THE EPOXY INTERMEDIATE COAT SPECIFIED IN SUPPLEMENT 910. THE COATING THICKNESS WILL COVER ALL PEAKS, VALLEYS AND SURFACE ROUGHNESS ATTRIBUTED TO METALIZING.

4. COATING REPAIRS: DAMAGED COATINGS SHALL BE REPAIRED BY ASTM A780, ANNEX "A1. REPAIR USING ZINC BASED ALLOYS." THE PROCEDURE SHALL BE AS FOLLOWS: REMOVE SURFACE CONTAMINATES, PREHEAT TO 600 DEGREES F, AND APPLY ZINC COATING BY RUBBING WITH A PURE ZINC STICK OR SPRINKLING ZINC POWDER ON THE PREHEATED SURFACE, TO ACHIEVE A MINIMUM COATING THICKNESS OF 6 MILS.

5. THE GALVANIZED OR METALIZED COATINGS SHOULD NOT BE FIELD PAINTED, EXCEPT FOR AREAS DAMAGED BY CONNECTION TO PAINTED SUPERSTRUCTURE STEEL MEMBERS. THESE AREAS SHALL BE PAINTED USING THE SAME SYSTEM SPECIFIED FOR THE SUPERSTRUCTURE.

6. PRIOR TO SHIPPING RETAINER GROOVES SHALL BE PROTECTED FROM CONSTRUCTION DEBRIS BY THE INSTALLATION OF BACKER RODS OR OTHER EFFECTIVE MASKING TECHNIQUES.

DESIGN AGENCY
KORDA
KORDA/DIMEETH ENGINEERING
1800 WATERMARK DRIVE, SUITE 200
COLUMBUS, OHIO 43215-1094
TEL (614) 487-1650
FAX (614) 487-1999
WEB www.korda.com

DESIGNED	DRAWN	REVIEWED	DATE
SM	JM	RWE	7/27/06
CHECKED	REVISED	STRUCTURE FILE NUMBER	
JKS		7600488L/7600518R	

MODULAR EXPANSION JOINT NOTES
BRIDGE NO.: STA-21-1248 L & R
OVER TUSCARAWAS RIVER, R.J. CORMAN R.R. AND T.R.353

STA-21-12.48
PID No. 25433

H:\Projects\2006\2006-0007 STA-21-12.48 Part 2\Structural-Bridge\Drawings\006_021_1248LEX001.dgn
006_021_1248LEX001.dgn
2/12/2007 2:04:09 PM

MODULAR EXPANSION JOINT NOTES (CONT.)

F. INSTALLATION

1. PROVIDE A JOINT MANUFACTURER'S TECHNICAL REPRESENTATIVE TO PHYSICALLY OVERSEE THE FABRICATION, INSTALLATION, ADJUSTMENT AND TESTING DURING ALL OPERATIONS. WHERE SPECIAL INSTRUCTIONS ARE NOT CONTAINED HEREIN OR ELSEWHERE IN THESE NOTES, DIRECTION FOR THE INSTALLATION SHALL BE ACCORDING TO THE RECOMMENDATIONS OF THE TECHNICAL REPRESENTATIVE.

2. COORDINATE AND SCHEDULE THE TECHNICAL REPRESENTATIVE.

3. INSTALL THE SUPERSTRUCTURE SUPPORTING UNITS BEFORE INSTALLING THE MODULAR JOINT. POSITION THE JOINT TO MATCH ROADWAY GEOMETRY, SUPER-STRUCTURE CONNECTIONS AND TEMPERATURE OPENING. TAKE CARE TO MAINTAIN EXACT ALIGNMENT OF ADJACENT ENDS OF THE ARMOR AND SEPARATION BEAMS/ /TRANSVERSE DIVIDERS/CENTER BEAMS FOR FIELD WELDED UNITS. PROVIDE TEMPORARY SUPPORTS AS DIRECTED BY THE MANUFACTURER TO MAINTAIN THE PROPER POSITIONING. FOR PHASED CONSTRUCTION. THE CONTRACTOR'S METHODS FOR INSTALLATION AND TEMPORARY SUPPORTS SHALL ACHIEVE SEPARATION OF THE PHASES AND UNRESTRICTED TEMPERATURE MOVEMENT.

4. PERFORM CONCRETE PLACEMENT USING VIBRATION AND HAND WORK AS NECES-SARY TO ACHIEVE CONSOLIDATION AND ELIMINATE AIR VOIDS.

5. PLACE THE DECK CONCRETE FIRST. CHECK THE ABUTMENT OR ADJACENT SPAN SIDE OF THE MODULAR JOINT FOR ALIGNMENT AND TEMPERATURE ADJUSTMENT. TEMPERATURE SHALL BE MEASURED AT THE UNDERSIDE OF THE CONCRETE DECK AT EACH END AND MID-SPAN TO ACHIEVE THE AVERAGE SUPER STRUCTURE TEMPERATURE. PLACE THE BACKWALL OR ADJACENT SPAN CONCRETE SECOND. THE MANUFACTURER'S REPRESENTATIVE SHALL CHECK THAT TEMPERATURE MOVEMENT HAS NOT CAUSED ANY DAMAGE TO THE BOND BETWEEN THE JOINT AND THE CONCRETE.

6. EXAMINE SEAL RETAINERS FOR SOIL OR DEFECTS THAT CAN DAMAGE THE SEAL. REPAIR ANY DEFECTS AS DIRECTED BY THE MANUFACTURER'S REPRESENTATIVE.

7. SOLVENT CLEAN THE NEOPRENE SEAL ELEMENTS AND THE RETAINER GROOVES TO REMOVE OIL, GREASE OR OTHER SOIL IMMEDIATELY PRIOR TO INSTALLING THE SEALS. INSTALL SEALS USING PROCEDURES AND ADHESIVE SPECIFIED BY THE JOINT MANUFACTURER. KEEP THE BONDING SURFACES CLEAN, DRY AND WARMER THAN 45°F.

8. TEST THE INSTALLED MODULAR JOINT FOR LEAKS. FLOOD THE TOTAL EXPAN-SION JOINT LENGTH WITH WATER FOR A PERIOD OF NOT LESS THAN ONE HOUR. COVER THE ENTIRE JOINT SYSTEM BY EITHER PONDING OR FLOWING WATER. LOCATE ANY POINTS OF LEAKAGE AND TAKE ANY AND ALL MEASURES NECES-SARY TO STOP THE LEAKAGE. PERFORM THIS WORK AT THE CONTRACTOR'S EXPENSE. PERFORM A SECOND WATER TEST AFTER ALL REPAIRS HAVE BEEN MADE.

G. METHOD OF MEASUREMENT

1. INCLUDE THE COST OF ALL LABOR, MATERIALS AND EQUIPMENT NECESSARY TO DESIGN, SUPPLY, INSTALL AND TEST A MODULAR EXPANSION JOINT ACCORDING TO THE PLANS AND THESE NOTES.

H. BASIS OF PAYMENT

1. PAYMENT WILL BE MADE AT CONTRACT PRICES FOR:

ITEM	UNIT	DESCRIPTION
513E17001	FT	ITEM 513 STRUCTURAL STEEL MEMBERS, MODULAR EXPANSION JOINT, LEVEL UF, AS PER PLAN

H:\Projects\2006\2006-0007 STA-21-12_48 Part 2\Structural-Bridge\Drawings\007_021_1248LEX002.dgn 2/12/2007 2:04:06 PM
007_021_1248LEX002.dgn

DESIGN AGENCY
KORDA
KORDA/NEMETH ENGINEERING
1650 WATERMARK DRIVE, SUITE 200
COLUMBUS, OHIO 43215-7094
WEB www.korda.com
TEL (614) 487-9500
FAX (614) 487-9591

DESIGNED	DRAWN	REVIEWED	DATE
SM	JM	RWE	7/27/06
CHECKED	REVISED	STRUCTURE FILE NUMBER	
JKS		7600488L/7600518R	

MODULAR EXPANSION JOINT NOTES
BRIDGE NO.: STA-21-1248 L & R
OVER TUSCARAWAS RIVER, R.J. CORMAN R.R. AND T.R.353

STA-21-12.48
PID No. 25433

ESTIMATED QUANTITIES

CALCS BY: CAB DATE: 8-06
CHECK BY: JKS DATE: 9-06

ITEM	ITEM EXT.	LEFT BRIDGE TOTAL	RIGHT BRIDGE TOTAL	UNIT	DESCRIPTION	LEFT BRIDGE				RIGHT BRIDGE				SEE SHEET NO.
						SUPER	ABUT	PIER	GEN'L	SUPER	ABUT	PIER	GEN'L	
202	11203	LUMP	LUMP		PORTIONS OF STRUCTURE REMOVED, OVER 20 FOOT SPAN, AS PER PLAN				LUMP				LUMP	
202	22900	133	133	SQ YD	APPROACH SLAB REMOVED				133				133	3,11,12,14,15,18 OF 34
503	11100	LUMP	LUMP		COFFERDAMS, CRIBS AND SHEETING				LUMP				LUMP	
509	10000	327,584	327,599	POUND	EPOXY COATED REINFORCING STEEL	271628	13256	39226	3474	271628	13270	39227	3474	
509	20001	500	500	POUND	REINFORCING STEEL, REPLACEMENT OF EXISTING REINFORCING STEEL, AS PER PLAN	500				500				4/34
510	10000	609	611	EACH	DOWEL HOLES WITH NONSHRINK, NONMETALLIC GROUT		435	174			437	174		
511	50001	738	738	CU YD	CLASS HP CONCRETE, BRIDGE DECK, AS PER PLAN	738				738				
511	50101	240	240	CU YD	CLASS HP CONCRETE, BRIDGE DECK (PARAPET), AS PER PLAN	222	4		14	222	4		14	
511	50201	476	477	CU YD	CLASS HP CONCRETE, SUBSTRUCTURE, AS PER PLAN		156	320			157	320		
511	52000	LUMP	LUMP		CLASS HP CONCRETE, TEST SLAB	LUMP				LUMP				
512	10100	2897	3053	SQ YD	SEALING OF CONCRETE SURFACES (EPOXY-URETHANE)	1829	268	710	90	1829	295	839	90	
512	10600	18	14	FT	CONCRETE REPAIR BY EPOXY INJECTION		18				14			
512	33000	56	58	SQ YD	TYPE 2 WATERPROOFING		56				58			
513	10201	77810	77810	POUND	STRUCTURAL STEEL MEMBERS, LEVEL UF, AS PER PLAN	77810				77810				4, 19, 21 OF 34
513	10221	8032	8032	POUND	STRUCTURAL STEEL MEMBERS, LEVEL 1, AS PER PLAN	8032				8032				4, 18, OF 34
513	17001	106.5	106.5	FT	STRUCTURAL STEEL MEMBERS, MODULAR EXPANSION JOINT, LEVEL UF, AS PER PLAN				106.5				106.5	6, 30 OF 34
513	20000	4416	4416	EACH	WELDED STUD SHEAR CONNECTORS	4416				4416				
513	90000	500	500	POUND	STRUCTURAL STEEL MISC.: REPLACEMENT OF WARPED PLATES	500				500				19/34
513	95000	4712	4712	FT	STRUCTURAL STEEL MISC.: PACK RUST REPAIR AND CAULKING	4712				4712				19/34
513	95030	340	340	EACH	STRUCTURAL STEEL MISC.: REPLACE EXISTING RIVETS WITH HIGH STRENGTH BOLTS	340				340				
516	46801	12	12	EACH	REFURBISH AND RESET BEARING DEVICES, AS PER PLAN			12				12		15, 29 OF 34
516	46900	8	8	EACH	BEARING DEVICE, MISC. (EXISTING ABUTMENT BEARINGS REPLACED IN KIND)		8				8			
516	47001	LUMP	LUMP		JACKING AND TEMPORARY SUPPORT OF SUPERSTRUCTURE, AS PER PLAN				LUMP				LUMP	4, 9, 10 OF 34
518	21200	162	179	CU YD	POROUS BACKFILL WITH FILTER FABRIC		162				179			
518	40000	173	183	FT	6" PERFORATED CORRUGATED PLASTIC PIPE		173				183			
518	40010	41	45	FT	6" NON-PERFORATED CORRUGATED PLASTIC PIPE, INCLUDING SPECIALS		41				45			
526	25001	194	194	SQ YD	REINFORCED CONCRETE APPROACH SLABS, (T=15"), AS PER PLAN				194				194	4, 27 OF 34
601	20000	765	1010	SQ YD	CRUSHED AGGREGATE SLOPE PROTECTION				765				1010	
601	21000	1058	633	SQ YD	CONCRETE SLOPE PROTECTION				1058				633	
843	50001	36	66	SQ FT	PATCHING CONCRETE STRUCTURES WITH TROWELABLE MORTAR, AS PER PLAN		26	10			46	20		11, 15 OF 34
					PAINTING ALTERNATE									
514	00050	82797	82797	SQ FT	SURFACE PREPARATION OF EXISTING STRUCTURAL STEEL	82797				82797				
514	00056	82797	82797	SQ FT	FIELD PAINTING OF EXISTING STRUCTURAL STEEL, PRIME COAT	82797				82797				
514	00060	82797	82797	SQ FT	FIELD PAINTING STRUCTURAL STEEL, INTERMEDIATE COAT	82797				82797				
514	00066	82797	82797	SQ FT	FIELD PAINTING STRUCTURAL STEEL, FINISH COAT	82797				82797				
514	00504	47	47	MAN HOUR	GRINDING FINS, TEARS, SLIVERS ON EXISTING STRUCTURAL STEEL	47				47				
514	10000	26	26	EACH	FINAL INSPECTION REPAIR	26				26				
					METALLIZING ALTERNATE									
845	60000	82797	82797	SQ FT	SURFACE PREPARATION OF EXISTING STRUCTURAL STEEL	82797				82797				
845	61000	47	47	MAN HOUR	GRINDING FINS, TEARS, SLIVERS ON EXISTING STRUCTURAL STEEL	47				47				
845	62000	82797	82797	SQ FT	FIELD METALLIZING EXISTING STRUCTURAL STEEL	82797				82797				

DESIGN AGENCY
KORDA
KORDA/RICHARD ENGINEERING
WEB www.korda.com
FAX (614) 487-8996

DESIGNED CAB | DRAWN CAB | REVIEWED RWE | DATE 2/02/07
CHECKED JKS | REVISED | STRUCTURE FILE NUMBER 7600488L/7600518R

ESTIMATED QUANTITIES
BRIDGE NO.: STA-21-1248 L & R
OVER TUSCARAWAS RIVER, R.J. CORMAN R.R. AND T.R.353

STA-21-12.48
PID No. 25433

8 / 34

97
124

H:\Projects\2006\2006-0007 STA-21-12.48 Part 2\Structural-Bridge\Drawings\008_02L1248LE001.dgn 8/27/2007 7:54:40 AM
008_02L1248LE001.dgn

NOTE:
PROVIDE AN ADDITIONAL STIFFENER ANGLE 8 X 8 X¾ TO BE BOLTED TO GIRDER WEB AT TEMPORARY SUPPORT LOCATIONS PRIOR TO JACKING OPERATIONS IF AN EXISTING STIFFENER ANGLE IS NOT LOCATED AT THE TEMPORARY SUPPORT LOCATION. ADDITIONAL STIFFENERS TO BE LEFT IN PLACE.

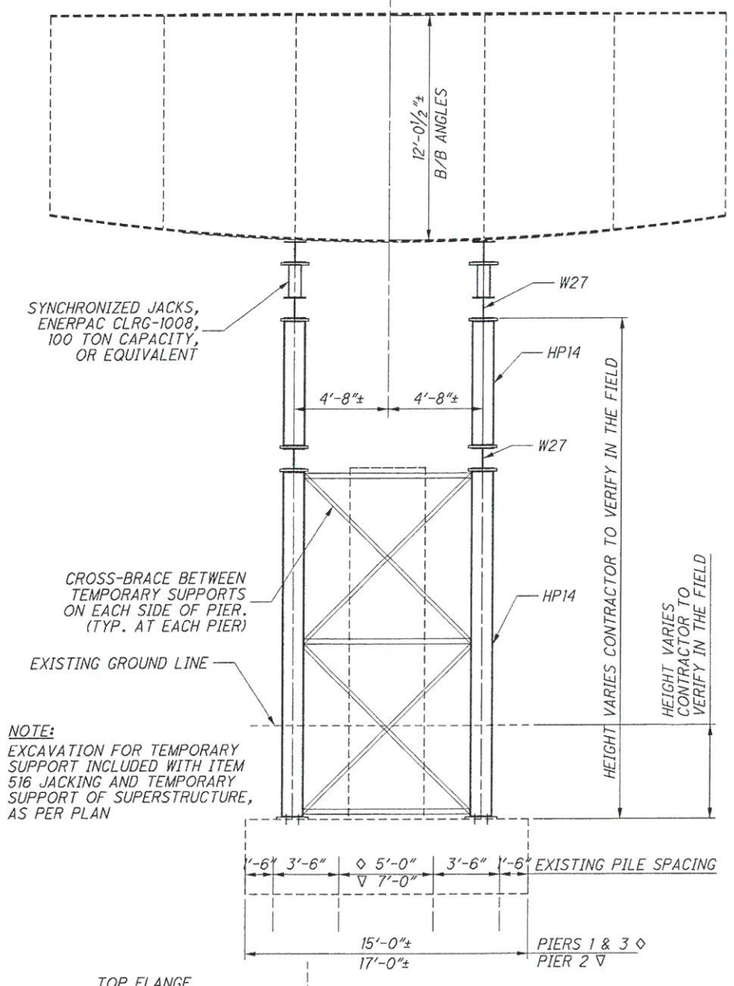

CONCEPTUAL TEMPORARY SUPPORT AT PIERS

PIER 1 LT SHOWN
(PIER 1 RT, PIERS 2 AND 3 LT/RT SIMILAR)

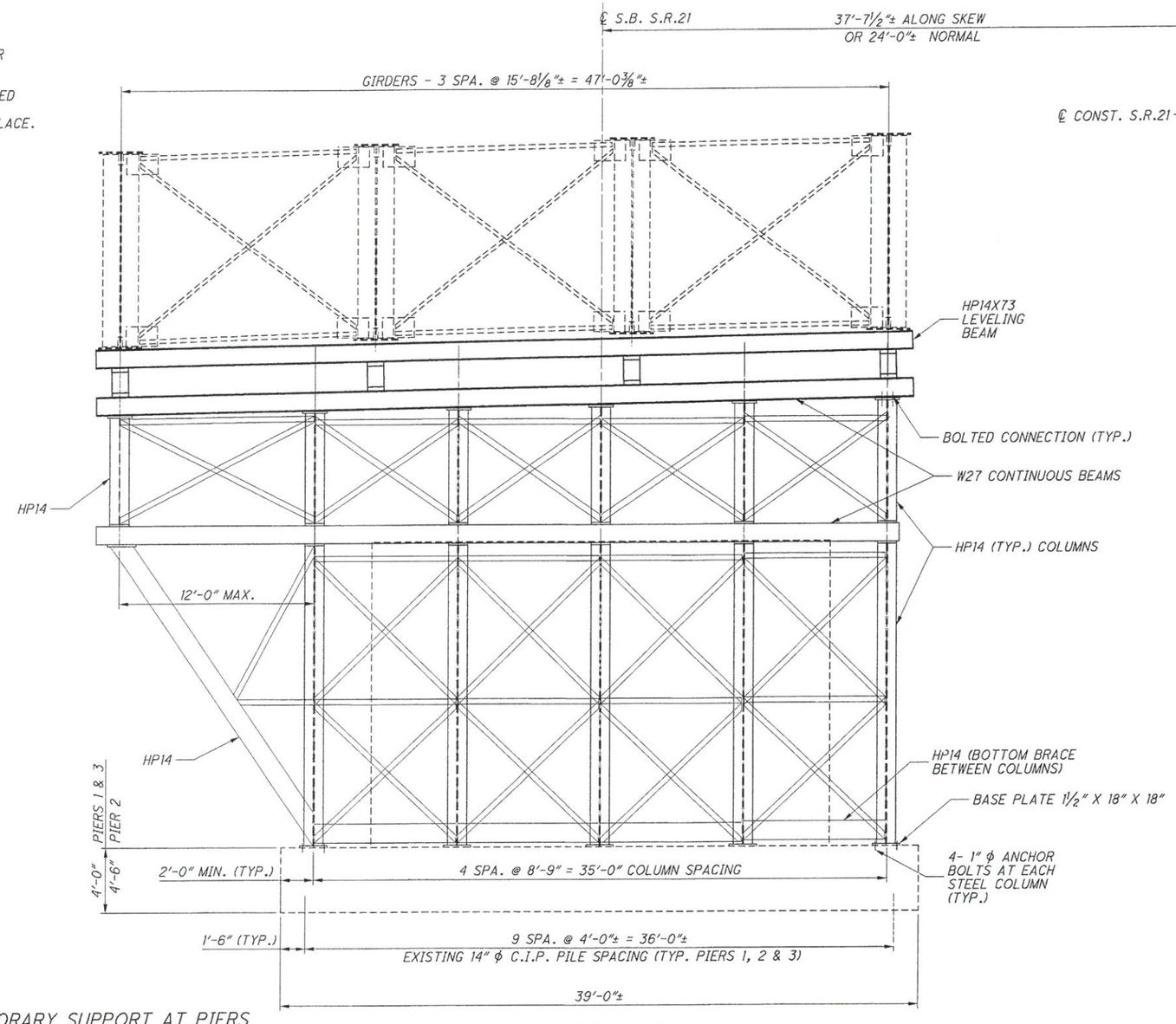

VIEW A - A

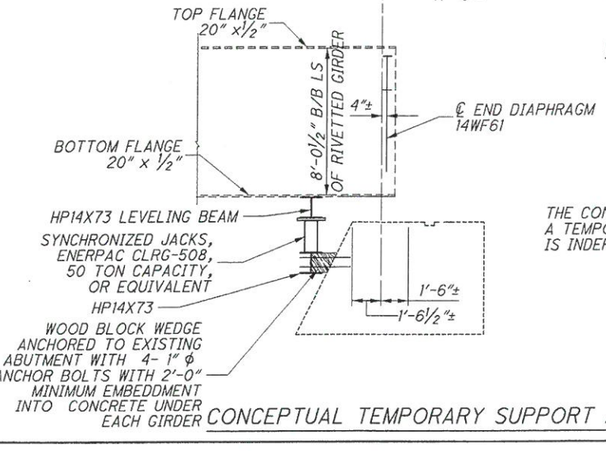

CONCEPTUAL TEMPORARY SUPPORT AT ABUTMENTS

THE CONTRACTOR MAY DEVELOP A TEMPORARY SUPPORT PLAN WHICH IS INDEPENDENT OF ABUTMENT.

DESIGN STEEL GIRDER DEAD LOADS:

PIER:
-SUPPORT LOAD = 60 TONS AT EACH SIDE OF PIER AT EACH GIRDER.

ABUTMENT:
-SUPPORT LOAD = 22 TONS AT EACH ABUTMENT AT EACH GIRDER.

EXISTING PILES:
-ALLOWABLE CAPACITY 14" ϕ C.I.P. 50 TON/PILE (FROM ORIGINAL DESIGN PLANS)

NOTE

THE CONTRACTOR SHALL SUBMIT DESIGN, SPECIFICATIONS AND PLANS FOR A JACKING SYSTEM, INCLUDING THE TEMPORARY SUPPORTS AT ABUTMENTS & PIERS AS PER CMS 501.05.

AT THE CONTRACTOR'S OPTION AN ALTERNATE METHOD OF TEMPORARY SUPPORT SYSTEM MAY BE DESIGNED AND USED WITH THE APPROVAL OF THE ENGINEER.

THE CONTRACTOR SHALL PROVIDE PROTECTION (PROTECT UP TO HW10 EL. 932.9) TO THE TEMPORARY SUPPORT STRUCTURE FROM RIVER DEBRIS, USING COFFERDAMS, CRIBS AND/OR SHEETING.

PROVIDE SHIM PLATES FOR PROPER BEARING OF GIRDERS ON LEVELING BEAM.

SEE SHEET 10/34 FOR PLAN VIEW OF CONCEPTUAL TEMPORARY SUPPORTS AND OTHER DETAILS.

DESIGN AGENCY
KORDA
KORDA/NEMETH ENGINEERING
6650 WATERMARK DRIVE, SUITE 200
COLUMBUS, OHIO 43235-5084
WEB www.korda.com
TEL (614) 487-8650
FAX (614) 487-8346

DESIGNED	DRAWN	REVIEWED	DATE
JKS	CAB	RWE	7/27/06
CHECKED	REVISED	STRUCTURE FILE NUMBER	
CAB		7600488L/7600518R	

CONCEPTUAL JACKING AND TEMPORARY SUPPORT LAYOUT
BRIDGE NO.: STA-21-1248 L & R
OVER TUSCARAWAS RIVER, R.J. CORMAN R.R. AND T.R.353

STA-21-12.48
PID No. 25433

2/12/2007 2:03:58 PM
H:\Projects\2006\2006-0007 STA-21-12_48 Part 2\Structural-Bridge\Drawings\009_021_1248LPC001.dgn
009_021_1248LPC001.dgn

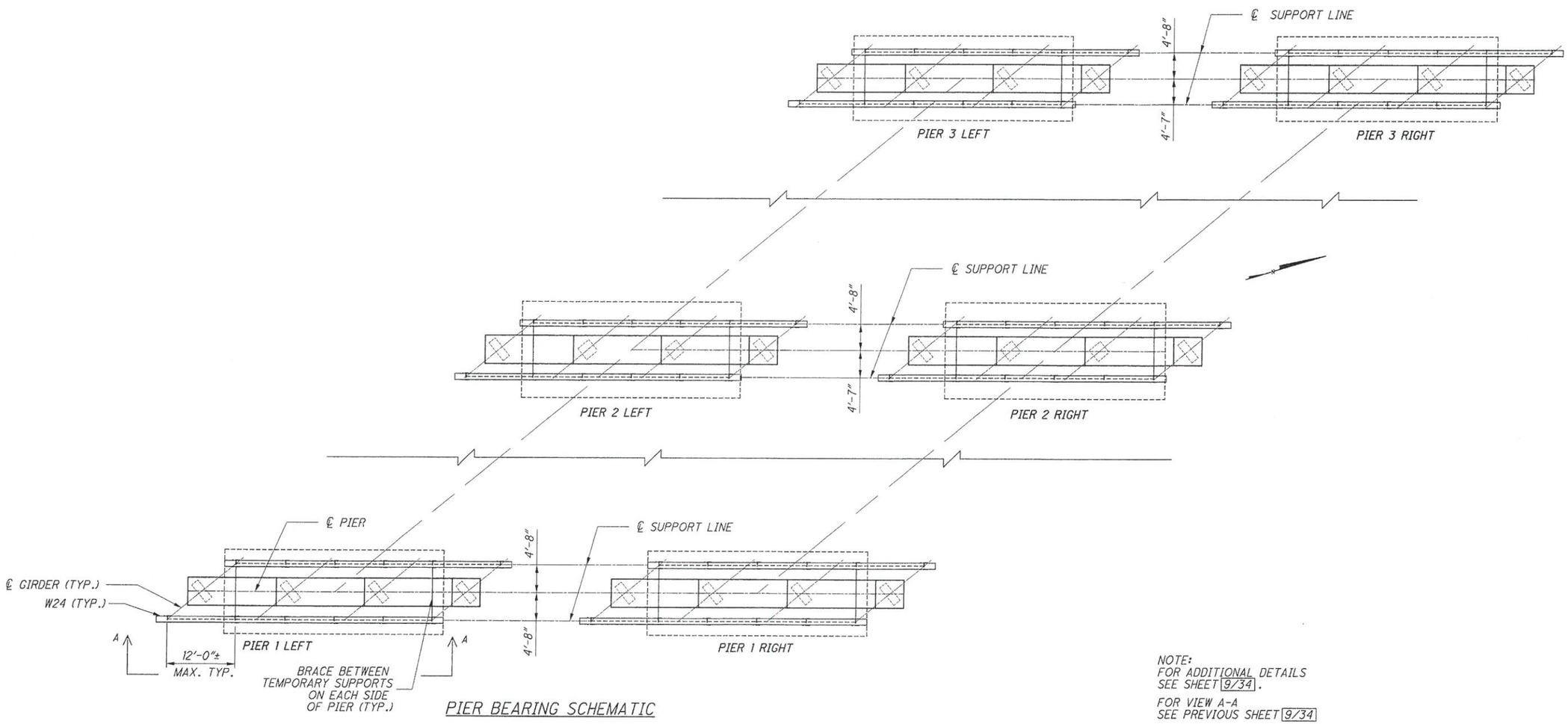

PIER BEARING SCHEMATIC

NOTE:
FOR ADDITIONAL DETAILS
SEE SHEET 9/34.

FOR VIEW A-A
SEE PREVIOUS SHEET 9/34

DESIGN AGENCY
KORDA
KORDA/NEMETH ENGINEERING
1650 WATERMARK DRIVE, SUITE 200
COLUMBUS, OHIO 43215-1054
WEB www.korda.com
TEL (614) 487-5650
FAX (614) 487-8581

DESIGNED	DRAWN	REVIEWED	DATE
JKS	CAB	RWE	7/27/06
CHECKED	REVISED	STRUCTURE FILE NUMBER	
CAB		7600488L/7600518R	

CONCEPTUAL JACKING AND TEMPORARY SUPPORT LAYOUT
BRIDGE NO.: STA-21-1248 L & R
OVER TUSCARAWAS RIVER, R.J. CORMAN R.R. AND T.R.353

STA-21-12.48
PID No. 25433

H:\Projects\2006\2006-0007 STA-21-12.48 Part 2\Structural-Bridge\Drawings\010_021_1248LPC002.dgn 2/12/2007 2:03:54 PM
010_021_1248LPC002.dgn

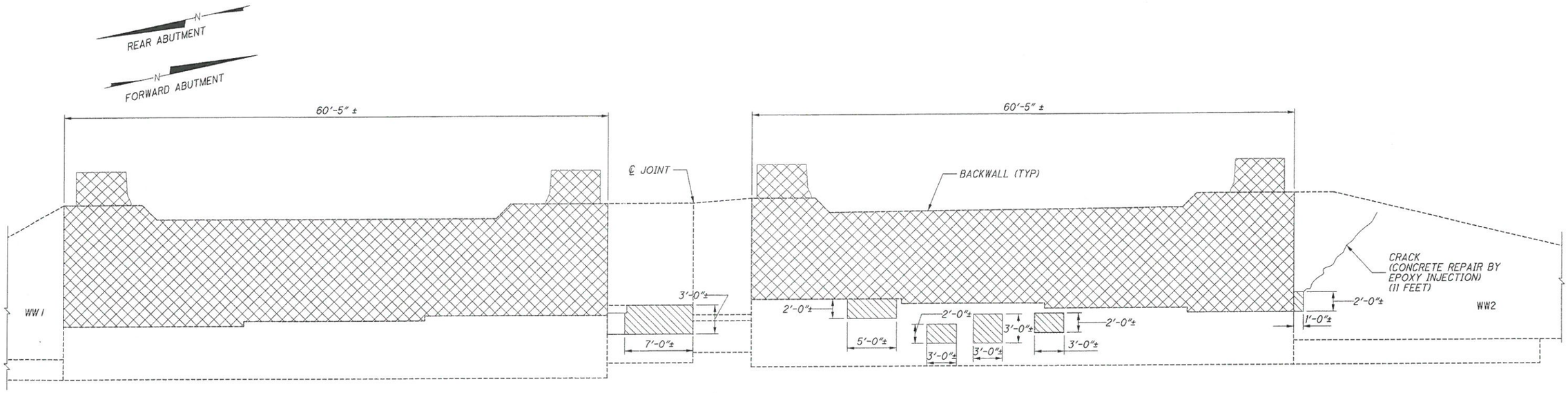

LT. BRIDGE

FORWARD ABUTMENT ELEVATION

RT. BRIDGE

PATCHING TABLE FIELD MEASUREMENT (6-28-04 TO 6-30-04)			
LOCATION	AREA MEASURED	DETERIORATION FACTOR	PAY AREA ESTIMATED
R ABUT RT BR	4 SQ. FT.	1.25	5.00 SQ. FT.
F ABUT LT BR	21 SQ. FT.	1.25	26.25 SQ. FT.
F ABUT RT BR	33 SQ. FT.	1.25	41.25 SQ. FT.
		TOTAL	72.50 SQ. FT.

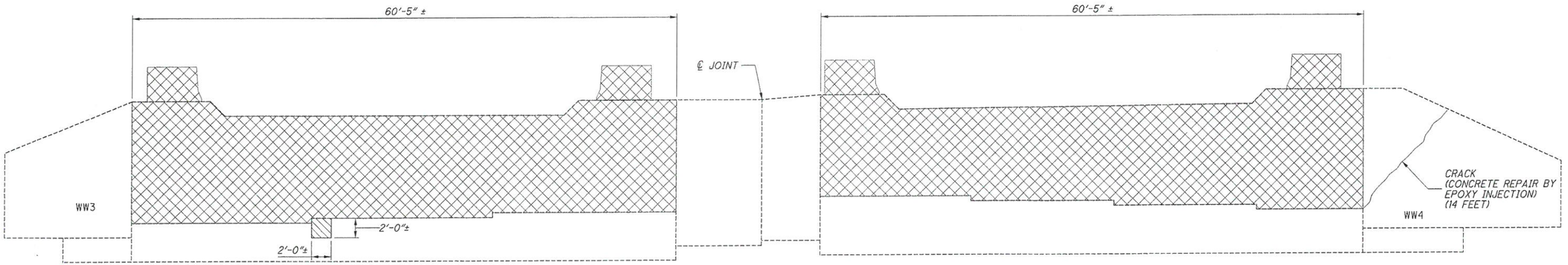

RT. BRIDGE

REAR ABUTMENT ELEVATION

SEE SHEET 14 /34 FOR REMOVAL DETAILS

LT. BRIDGE

NOTES:

- DRAWINGS ARE SCHEMATIC (NOT TO SCALE)
- ITEM 843 PATCHING CONCRETE STRUCTURES WITH TROWELABLE MORTAR FOR ESTIMATED PATCHING QUANTITIES, A FACTOR OF 1.25 HAS BEEN USED TO MULTIPLY FIELD MEASURED AREAS TO ACCOUNT FOR FUTURE DETERIORATION. (SEE TABLE)
- ACTUAL PATCHING AREAS TO BE DETERMINED AND APPROVED IN THE FIELD BY THE ENGINEER.

INDICATES AREAS TO BE PATCHED AS PER ITEM 843 PATCHING CONCRETE STRUCTURES WITH TROWELABLE MORTAR, AS PER PLAN

INDICATES AREAS TO BE REMOVED BACKWALLS AND PARAPETS SEE SHEET 12 /34

DESIGN AGENCY
KORDA
KORDA/MEHTA ENGINEERING
1555 WATERMARK DRIVE, SUITE 220
COLUMBUS, OHIO 43215-7354
WEB: www.korda.com
TEL: (614) 487-8855
FAX: (614) 487-8989

DESIGNED	DRAWN	REVIEWED	DATE
JKS	AF	RWE	7/27/06
CHECKED	REVISED	STRUCTURE FILE NUMBER	
CAB		7600488L/7600518R	

ABUTMENT REMOVAL AND PATCHING DETAILS
BRIDGE NO.: STA-21-1248 L & R
OVER TUSCARAWAS RIVER, R.J. CORMAN R.R. AND T.R.353

STA-21-12.48
PID No. 25433

11 / 34

100
124

H:\Projects\2006\2006-0007 STA-21-12.48 Part 2\Structural-Bridge\Drawings\011_021_1248LAB001.dgn
2/12/2007 2:03:08 PM
011_021_1248LAB001.dgn

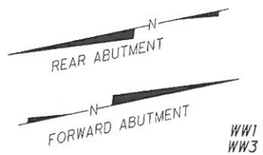

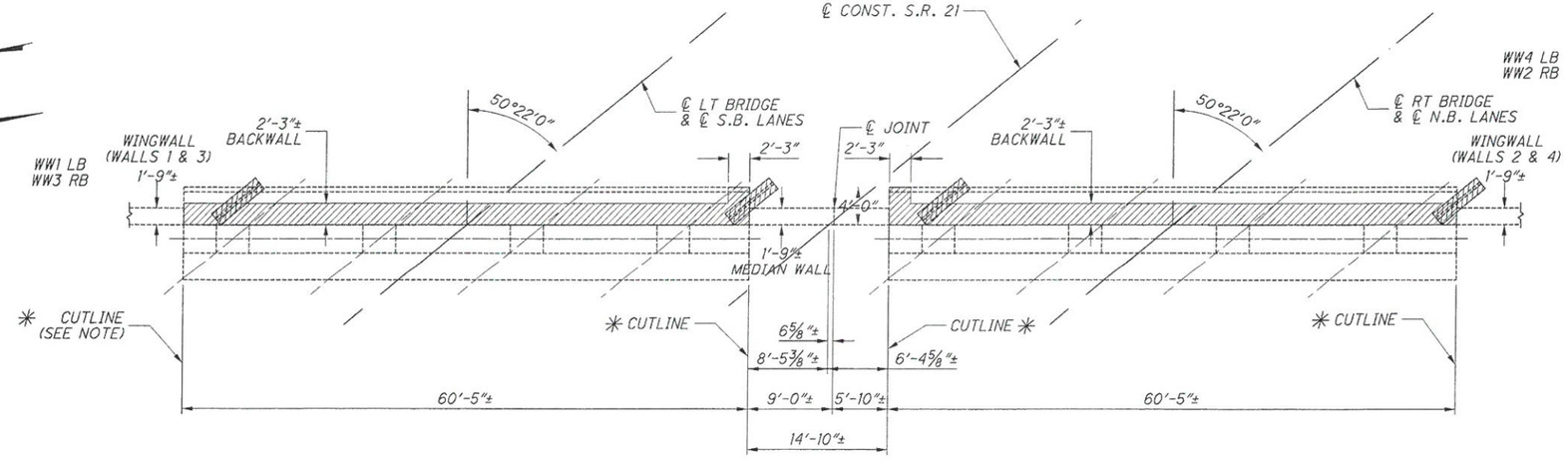

FORWARD ABUTMENT
STA-21-1248 LT BRIDGE

PLAN

FORWARD ABUTMENT
STA-21-1248 RT BRIDGE

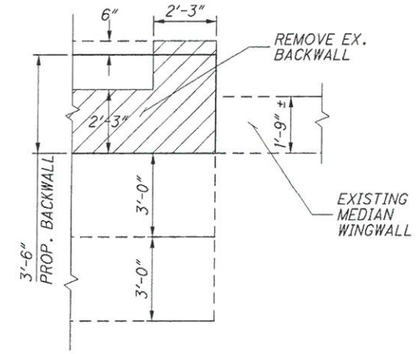

PLAN
BACKWALL REMOVAL
AT MEDIAN

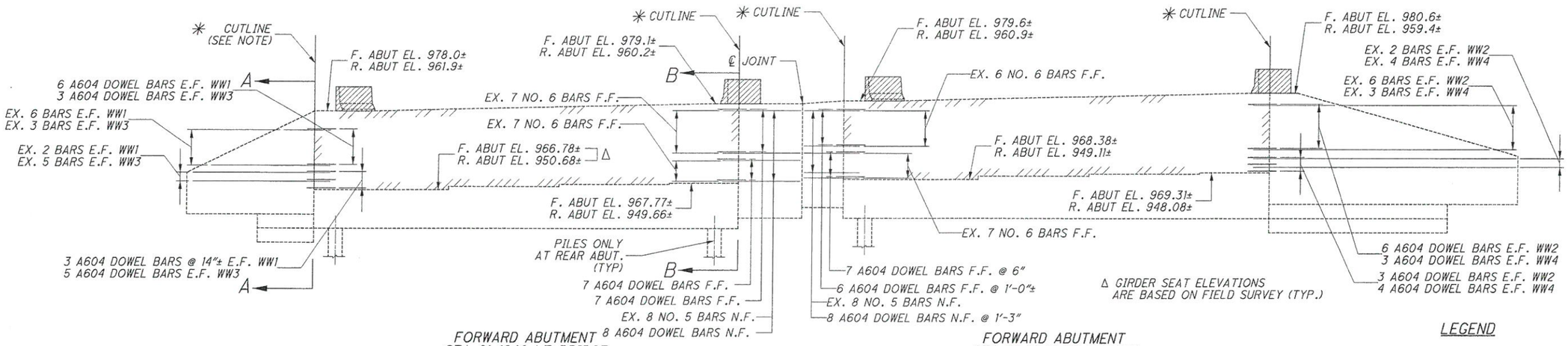

FORWARD ABUTMENT
STA-21-1248 LT BRIDGE

ELEVATION

FORWARD ABUTMENT SHOWN (REAR ABUTMENT SIMILAR)
BACKWALL IN ELEVATION
NOT COMPLETELY HATCHED FOR CLARITY

FORWARD ABUTMENT
STA-21-1248 RT BRIDGE

Δ GIRDER SEAT ELEVATIONS ARE BASED ON FIELD SURVEY (TYP.)

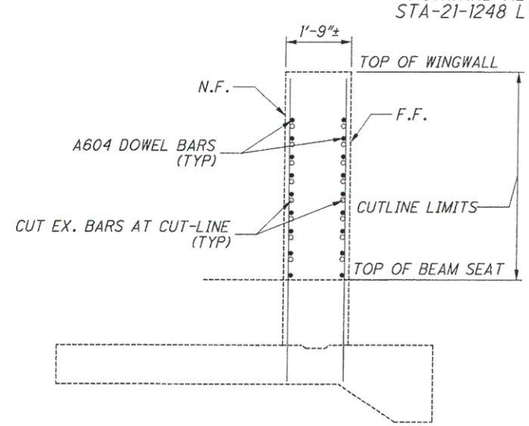

SECTION A-A
WINGWALL 1 SHOWN
(WINGWALLS 2 THROUGH 4 SIMILAR, SEE ELEVATION VIEW)

SEE SHEET 11/34 AND 14/34 FOR REMOVAL DETAILS OF EXISTING ABUTMENT

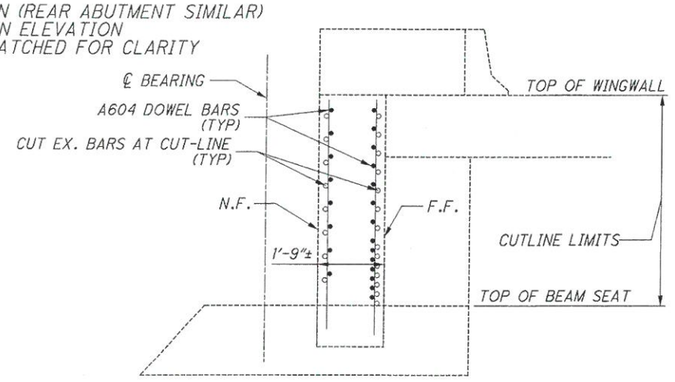

TYPICAL SECTION B-B
MEDIAN WINGWALL - FWD ABUT LT. BR SHOWN
(OTHER MEDIAN WINGWALLS SIMILAR)

LEGEND

	--	REMOVAL
EX	--	EXISTING WINGWALL REBARS
WW1	--	WINGWALL NO. 1
N.F.	--	NEAR FACE
F.F.	--	FAR FACE
E.F.	--	EACH FACE
LB	--	LEFT BRIDGE
RB	--	RIGHT BRIDGE

NOTES:

- FOR THE REMOVAL DETAILS OF EXISTING ABUTMENTS SEE SHEET 14/34
- DRILL 4'-6" LONG A604 DOWEL BARS 1'-6" INTO WINGWALLS. ALL DOWEL BARS ARE NO. 6 SIZE BARS.
- ✳ - CUT EXISTING WINGWALL BARS AT CUTLINE FOR BACKWALL REMOVAL
- CUT WINGWALL FROM TOP OF WINGWALL TO TOP OF GIRDER SEAT ALONG CUTLINE TO REMOVE THE BACKWALLS OF THE ABUTMENTS.

DESIGN AGENCY
KORDA
RICHARD A. KORDA, P.E.
WEST JEFFERSON, OHIO 43162
COLUMBUS, OHIO 43215-5984
WEB: www.korda.com
E-MAIL: info@korda.com
PH: (614) 497-9300
FAX: (614) 497-9301

DESIGNED	DRAWN	REVIEWED	DATE
JKS	JM	RWE	7/27/06
CHECKED	REVISED	STRUCTURE FILE NUMBER	
CAB		7600488L/7600518R	

ABUTMENT REMOVAL AND DOWEL DETAILS
BRIDGE NO.: STA-21-1248 L & R
OVER TUSCARAWAS RIVER, R.J. CORMAN R.R. AND T.R.353

STA-21-12.48
PID No. 25433

12 / 34

101 / 124

H:\Projects\2006\2006-0007 STA-21-12.48 Part 2\Structural-Bridge\Drawings\012_021_1248LAB002.dgn
2:03:01 PM 2/12/2007
012_021_1248LAB002.dgn

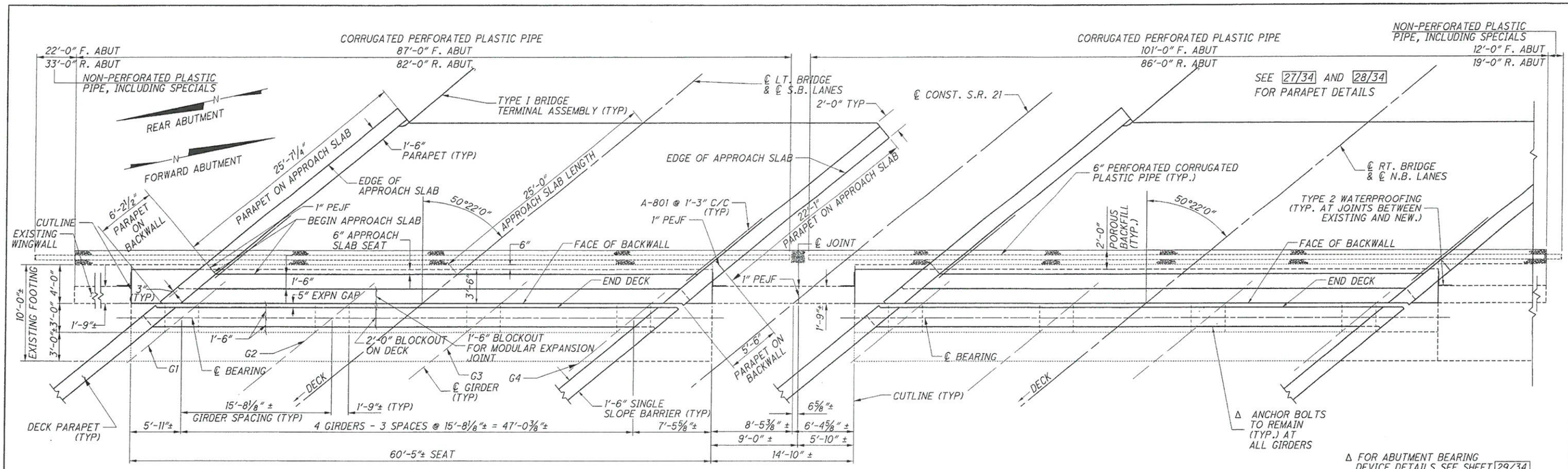

FOR SEALING OF CONCRETE SURFACES FOR ABUTMENT AND WINGWALLS SEE SHEET 14/34.

FOR SECTION A-A SEE SHEET 14/34.

TYPE 2 WATERPROOFING 3 FT. WIDE CENTERED ON VERTICAL AND HORIZONTAL JOINTS BETWEEN NEW AND EXISTING CONCRETE.

MINIMUM LAP LENGTH

#5 - 2'-6"

LEFT BRIDGE PLAN

PLAN

FORWARD ABUTMENT SHOWN
(REAR ABUTMENT SIMILAR AND OPPOSITE HAND)
(REINFORCING FORWARD ABUTMENT LT BRIDGE SHOWN)
(REINFORCING FORWARD ABUTMENT RT BRIDGE SIMILAR)

RIGHT BRIDGE PLAN

(DIMENSIONS AND DETAILS SIMILAR TO LEFT BRIDGE)

Δ FOR ABUTMENT BEARING DEVICE DETAILS SEE SHEET 29/34 EXISTING ANCHOR BOLTS TO REMAIN. CLEAN AND REUSE TO SET NEW BEARINGS.

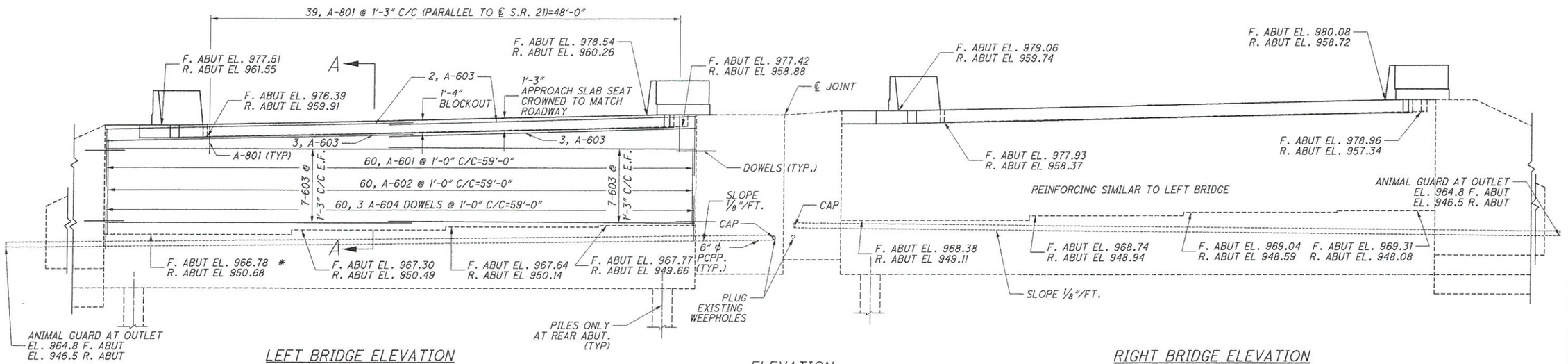

LEFT BRIDGE ELEVATION

NOTE: FOR ABUTMENT PARAPET OVERHANG DETAILS SEE SHEET 27/34

ELEVATION

FORWARD ABUTMENT SHOWN
(REAR ABUTMENT SIMILAR AND OPPOSITE HAND)

RIGHT BRIDGE ELEVATION

* NOTE: ALL EXISTING ABUTMENT DIMENSIONS AND ELEVATIONS SHOWN ARE PLUS MINUS.

FOR DOWEL DETAILS SEE SHEET 12/34

DESIGN AGENCY
KORDA
KORDA/NEMETH ENGINEERING
1650 WATERMARK DRIVE, SUITE 200
COLUMBUS, OHIO 43215-1040
TEL 614x 487-1650
FAX 614x 487-1660
WEB www.korda.com

DESIGNED	DRAWN	REVIEWED	DATE
JKS	AF	RWE	7/27/06
CHECKED	REVISED	STRUCTURE FILE NUMBER	
CAB		7600488L/7600518R	

ABUTMENT LAYOUT DETAILS
BRIDGE NO.: STA-21-1248 L & R
OVER TUSCARAWAS RIVER, R.J. CORMAN R.R. AND T.R. 353

STA-21-12.48
PID No. 25433

13 / 34

102 / 124

H:\Projects\2006\2006-0007 STA-21-12.48 Part 2\Structural-Bridge\Drawings\013_02L1248LAB003.dgn
2:02:55 PM
2/12/2007
013_02L1248LAB003.dgn

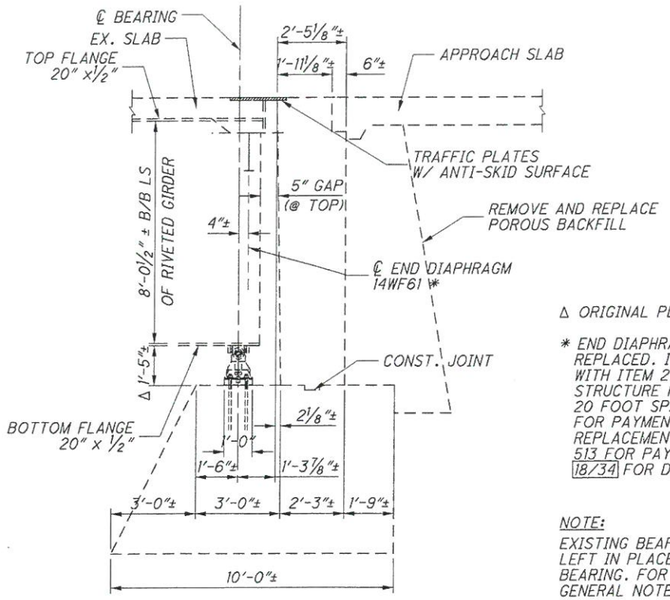

EXPANSION JOINT
AT EXISTING ABUTMENTS

FORWARD ABUTMENT SHOWN (NO PILES)
(REAR ABUTMENT SIMILAR WITH PILES)

Δ ORIGINAL PLAN DIMENSION

* END DIAPHRAGMS TO BE REPLACED. INCLUDE REMOVAL WITH ITEM 202 PORTIONS OF STRUCTURE REMOVED, OVER 20 FOOT SPAN, AS PER PLAN FOR PAYMENT. INCLUDE REPLACEMENT WITH ITEM 513 FOR PAYMENT. SEE SHEET 18/34 FOR DETAILS.

NOTE:
EXISTING BEARING ANCHOR BOLTS TO BE LEFT IN PLACE AND REUSED WITH NEW BEARING. FOR ADDITIONAL DETAILS, SEE GENERAL NOTES SHEET 4/34

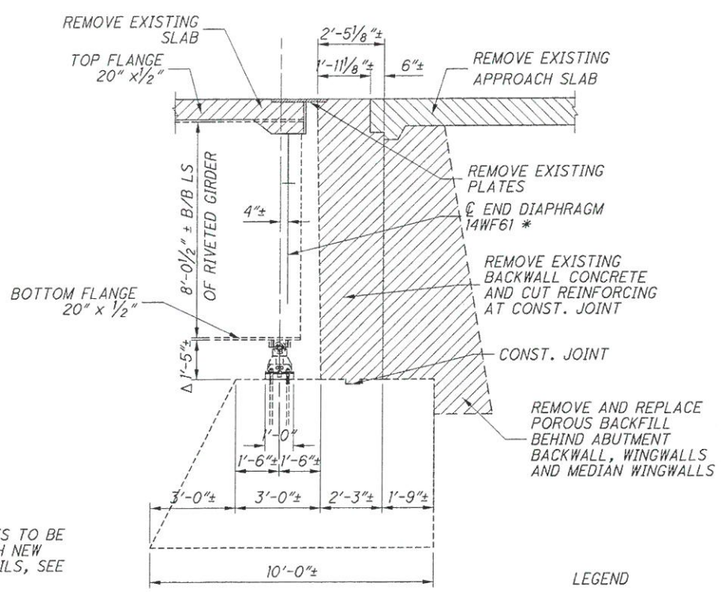

REMOVAL DETAILS
EXISTING ABUTMENTS

LEGEND

- REMOVAL AS PER ITEM 202 PORTIONS OF STRUCTURE REMOVED, OVER 20 FOOT SPAN, AS PER PLAN
- REMOVAL AS PER ITEM 202 APPROACH SLAB REMOVED

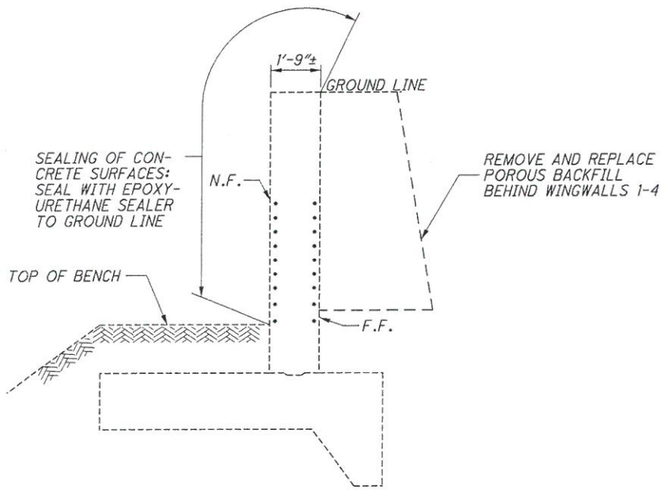

WINGWALL SEALING DETAIL

WINGWALL 1 SHOWN
(WINGWALLS 2 THROUGH 4 SIMILAR, SEE ELEVATION VIEW)

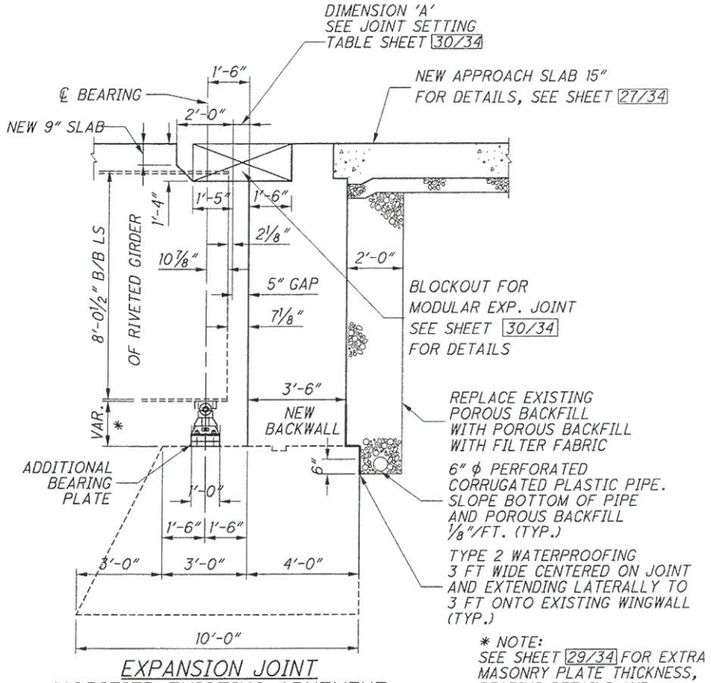

EXPANSION JOINT
MODIFIED EXISTING ABUTMENT

FORWARD ABUTMENT SHOWN (NO PILES)
(REAR ABUTMENT SIMILAR WITH PILES)

* NOTE:
SEE SHEET 29/34 FOR EXTRA MASONRY PLATE THICKNESS, BEARING DETAILS AND RESTRAINING ANGLE DETAILS

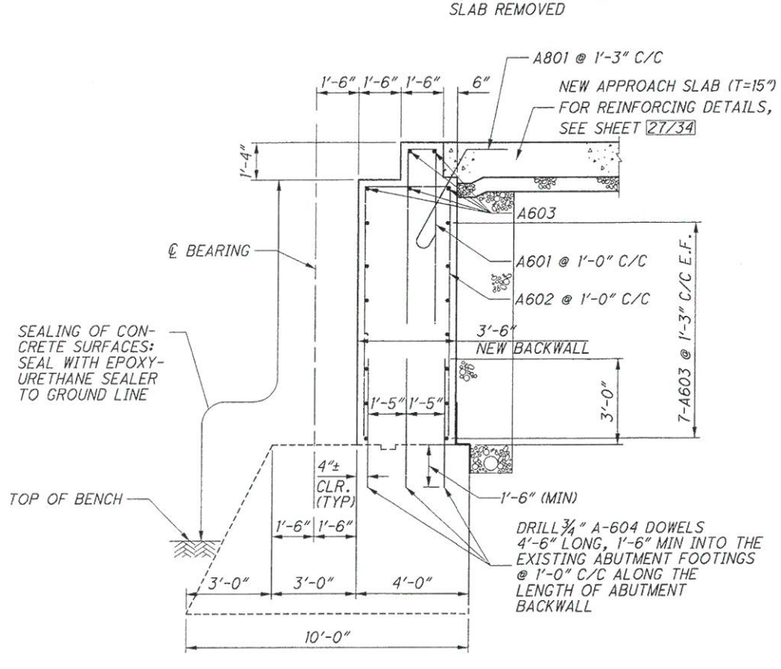

SEC. A-A

FORWARD ABUTMENT SHOWN (NO PILES)
(REAR ABUTMENT SIMILAR WITH PILES)

POROUS BACKFILL WITH FILTER FABRIC, 2 FEET THICK SHALL EXTEND UP TO THE PLANE OF THE SUBGRADE, TO 1 FOOT BELOW THE EMBANKMENT SURFACE AND LATERALLY TO THE ENDS OF THE WINGWALLS.

DESIGN AGENCY
KORDA
KORDA/RICHARD ENGINEERING
865 WATERMARK DRIVE, SUITE 200
COLUMBUS, OHIO 43215-1094
TEL (614) 487-9580
FAX (614) 487-9581

DESIGNED	DRAWN	REVIEWED	DATE
JKS	JM	RWE	7/27/06
CHECKED	REVISED	STRUCTURE FILE NUMBER	
CAB		7600488L/7600518R	

ABUTMENT BACKWALL REMOVAL AND REPLACEMENT DETAILS
BRIDGE NO.: STA-21-1248 L & R
OVER TUSCARAWAS RIVER, R.J. CORMAN R.R. AND T.R.353

STA-21-12.48
PID No. 25433

14 / 34

103
124

H:\Projects\2006\2006-0007 STA-21-12.48 Part 2\Structural-Bridge\Drawings\014_021_1248LAB004.dgn
2/12/2007 2:02:46 PM
014_021_1248LAB004.dgn

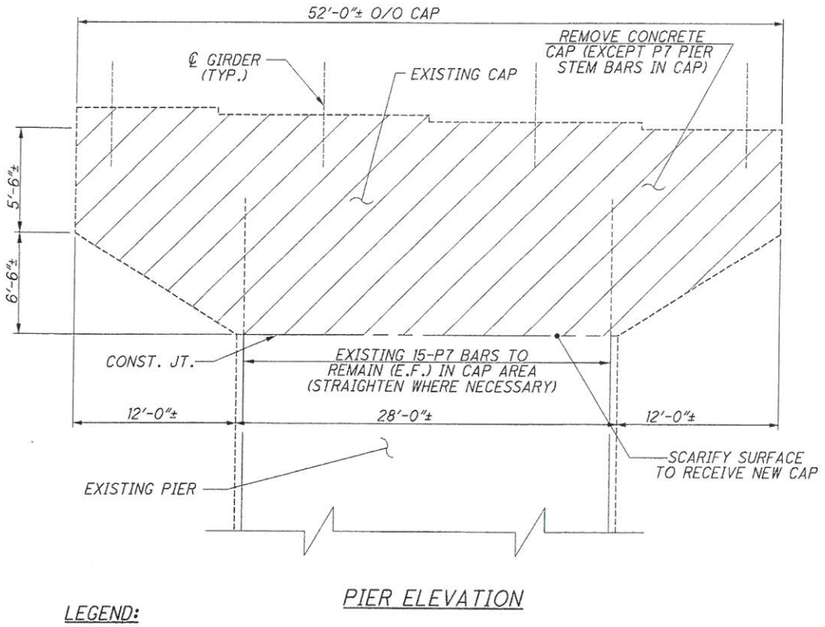

PIER ELEVATION

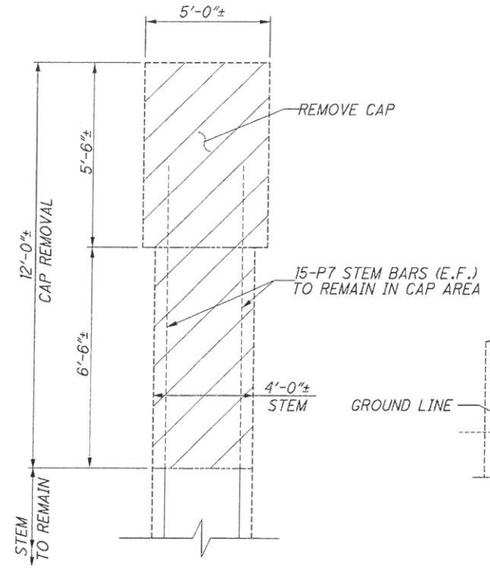

SECTION

PATCHING TABLE FIELD MEASUREMENT (6-28-04 TO 6-30-04)			
LOCATION	AREA MEASURED	DETERIORATION FACTOR	PAY AREA ESTIMATED
PIER 3 LEFT	8 SQ. FT.	1.25	10.00 SQ. FT.
PIER 3 RIGHT	16 SQ. FT.	1.25	20.00 SQ. FT.
		TOTAL	30.00 SQ. FT.

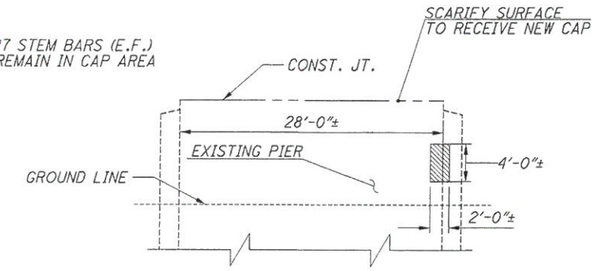

PIER 3 LEFT ELEVATION
EAST FACE

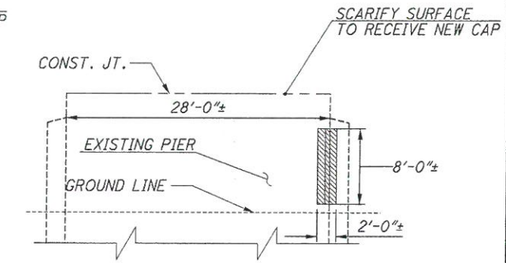

PIER 3 RIGHT ELEVATION
EAST FACE

LEGEND:

REMOVAL

LEGEND

ITEM 843 PATCHING CONCRETE STRUCTURES WITH TROWELABLE MORTAR, AS PER PLAN

EXISTING PIER CAP REMOVAL DETAILS
PIERS 1 THRU 3, LT. & RT. BRIDGES

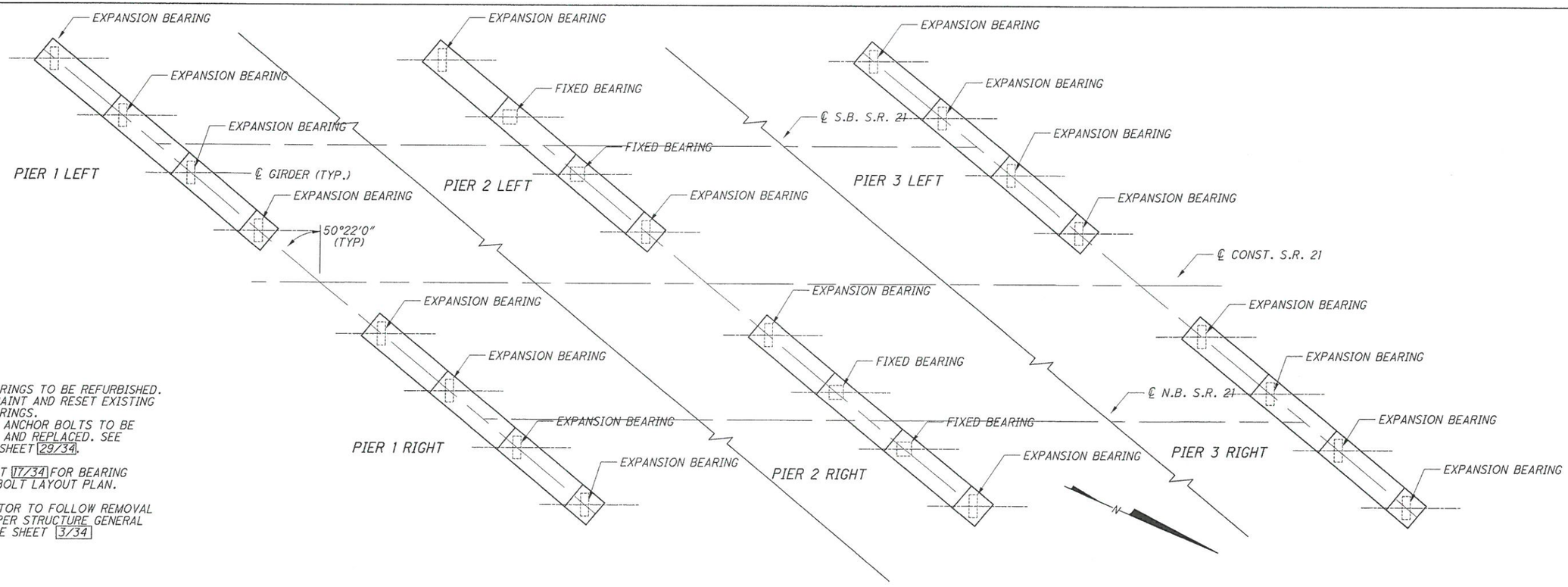

NOTE:

PIER BEARINGS TO BE REFURBISHED. CLEAN, PAINT AND RESET EXISTING PIER BEARINGS.
EXISTING ANCHOR BOLTS TO BE REMOVED AND REPLACED. SEE DETAILS SHEET 29/34.

SEE SHEET 17/34 FOR BEARING ANCHOR BOLT LAYOUT PLAN.

CONTRACTOR TO FOLLOW REMOVAL METHOD PER STRUCTURE GENERAL NOTE. SEE SHEET 3/34

PIER BEARING SCHEMATIC

DESIGN AGENCY
KORDA
KORDA/NEMETH ENGINEERING
1650 WATERMARK DRIVE, SUITE 200
COLUMBUS, OHIO 43215-1094
WEB www.korda.com
TEL (614) 487-1650
FAX (614) 487-9291

DESIGNED	DRAWN	REVIEWED	DATE
CAB	CAB	RWE	7/27/06
CHECKED	REVISED	STRUCTURE FILE NUMBER	
JKS		7600488L/7600518R	

PIER REMOVAL DETAILS (PIERS 1 THRU 3)
BRIDGE NO.: STA-21-1248 L & R
OVER TUSCARAWAS RIVER, R.J. CORMAN R.R. AND T.R. 353

STA-21-12.48
PID No. 25433

H:\Projects\2006\2006-0007 STA-21-12.48 Part 2\Structural-Bridge\Drawings\015_021_1248LP1001.dgn 2/12/2007 2:02:39 PM
015_021_1248LP1001.dgn

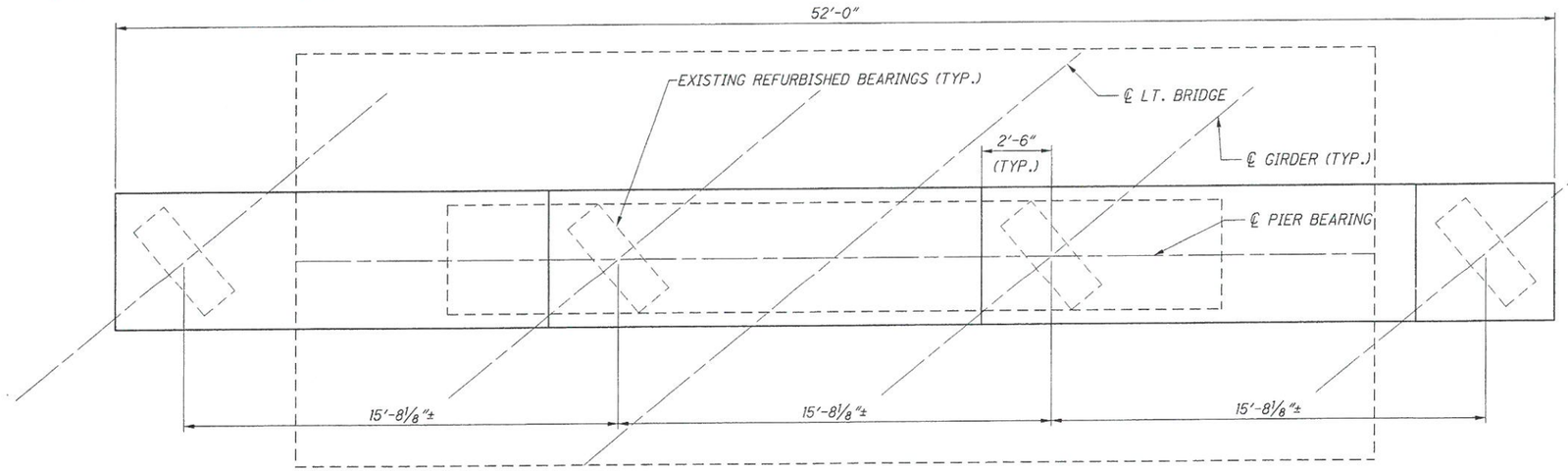

PLAN
LT. BRIDGE SHOWN (RT. BRIDGE SIMILAR)

NOTE:
SEE PIER BEARING SCHEMATIC PLAN SHEET 15/34 FOR LOCATION OF FIXED AND EXPANSION BEARINGS.

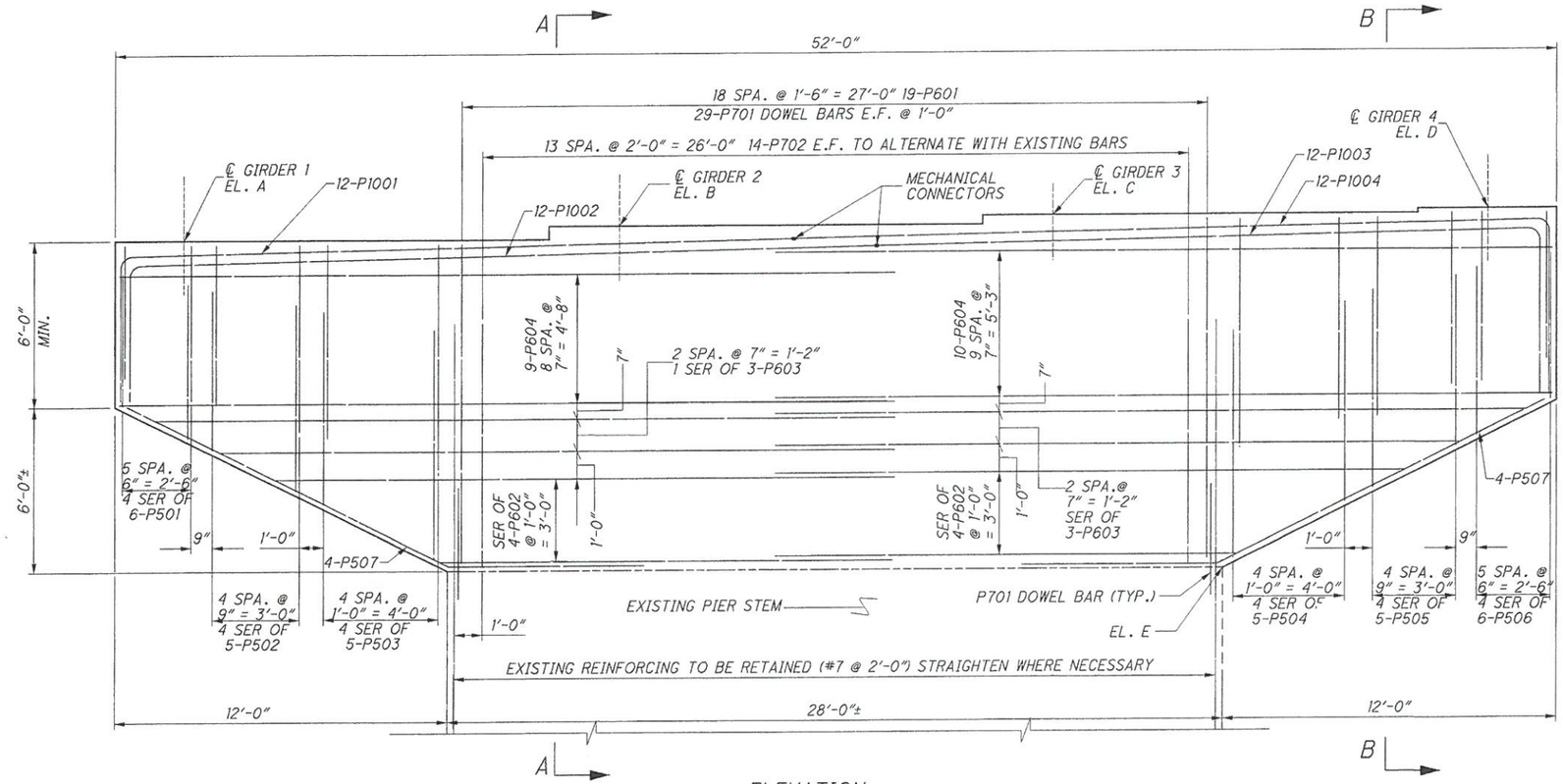

ELEVATION
LT. BRIDGE SHOWN (RT. BRIDGE SIMILAR)

NOTE:
SEE SHEET 17/34 FOR SECTIONS A-A AND B-B AND FOR PIER ELEVATION TABLE.

MINIMUM LAP
#5 - 3'-5"
#6 - 4'-4"
#10 - 11'-7"

NOTE:
BRIDGE SEAT REINFORCING, SETTING ANCHORS: ACCURATELY PLACE REINFORCING STEEL IN THE VICINITY OF THE BRIDGE SEAT TO AVOID INTERFERENCE WITH THE PRE-SETTING OF BEARING ANCHORS. SEE SHEET 15/34 FOR PIER BEARING SCHEMATIC PLAN. FOR REINFORCING LAYOUT IN PIER CAPS, ANCHOR BOLT PLAN AND SECTIONS SEE SHEET 17/34.

DESIGN AGENCY
KORDA
KORDA/NEMETH ENGINEERING
1650 WATERMARK DRIVE, SUITE 200
COLUMBUS, OHIO 43215-1094
WEB www.korda.com
TEL (614) 487-9650
FAX (614) 487-9981

DESIGNED	DRAWN	REVIEWED	DATE
CAB	CAB	RWE	7/27/06
CHECKED	REVISED	STRUCTURE FILE NUMBER	
JKS		7600488L/7600518R	

PIER CAP DETAILS (PIERS 1, 2 & 3)
BRIDGE NO.: STA-21-1248 L & R
OVER TUSCARAWAS RIVER, R.J. CORMAN R.R. AND T.R. 353

STA-21-12.48
PID No. 25433

H:\Projects\2006\2006-0007 STA-21-12.48 Part 2\Structural-Bridge\Drawings\016_021_1248LP1002.dgn 2/12/2007 2:02:35 PM
016_021_1248LP1002.dgn

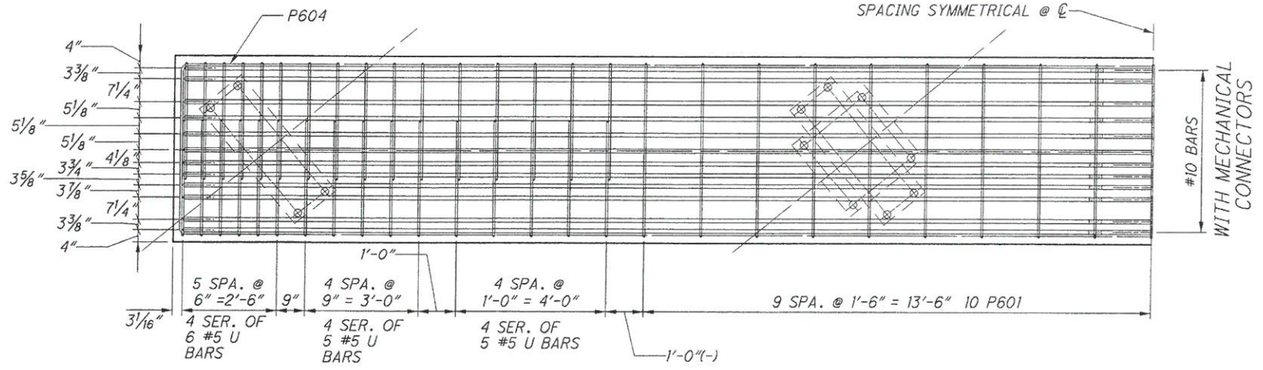

REINFORCING STEEL LAYOUT

(SEE SHEET 16/34 AND SECTIONS A-A AND B-B ON THIS SHEET FOR BAR MARKS)

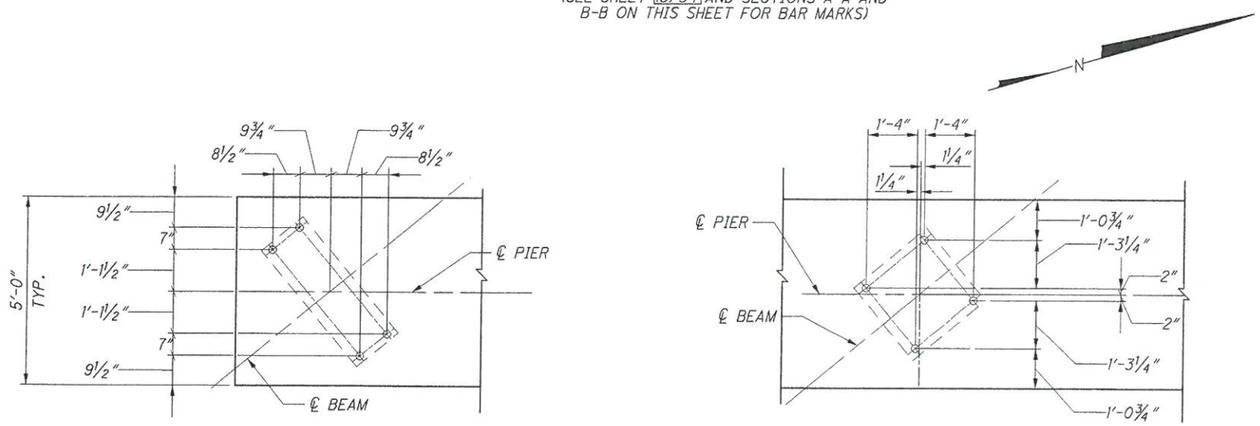

EXPANSION BEARING

FIXED BEARING

BEARING ANCHOR BOLT PLAN

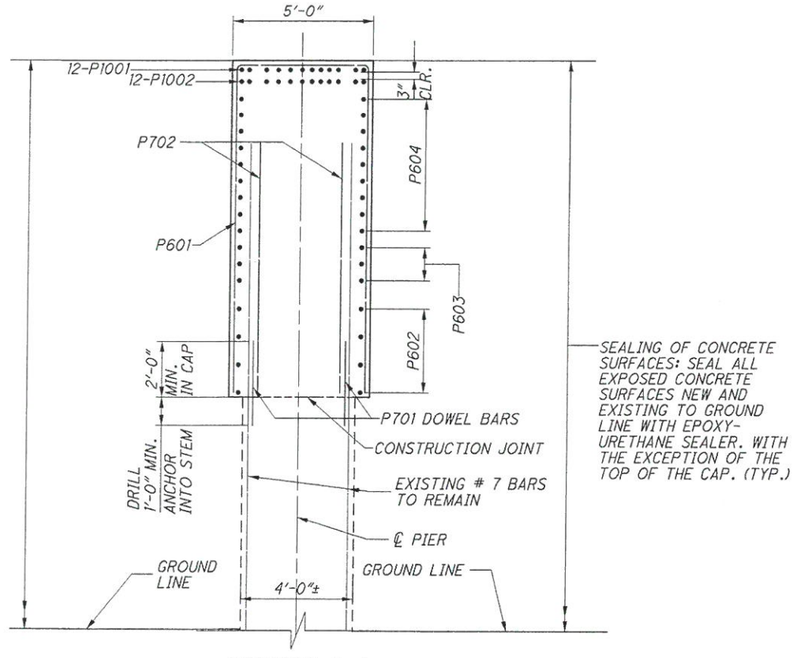

SECTION A-A

NOTE:

BRIDGE SEAT REINFORCING, SETTING ANCHORS: ACCURATELY PLACE REINFORCING STEEL IN THE VICINITY OF THE BRIDGE SEAT TO AVOID INTERFERENCE WITH THE PRE-SETTING OF BEARING ANCHORS. SEE THIS SHEET FOR REINFORCING LAYOUT IN PIER CAPS AND ANCHOR BOLT PLAN.

SEE SHEET 16/34 FOR PLAN AND ELEVATION VIEWS OF PIER CAPS AND LOCATION OF ELEVATIONS.

SEE SHEET 15/34 FOR PIER BEARING SCHEMATIC LAYOUT PLAN.

MINIMUM LAP

#5 - 3'-5"
#6 - 4'-4"
#10 - 11'-7"

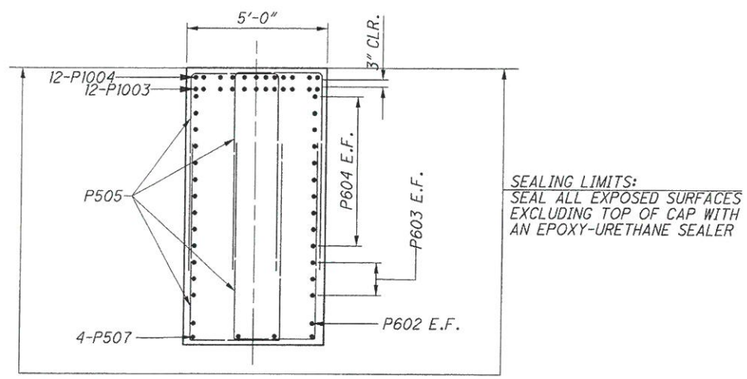

SECTION B-B

PIER ELEVATION TABLE

BRIDGE	PIER #	ELEVATION "A"	ELEVATION "B"	ELEVATION "C"	ELEVATION "D"	ELEVATION "E"
LEFT BR.	PIER 1	947.74	948.22	948.54	948.70	935.70±
SOUTH	PIER 2	952.93	953.41	953.73	953.89	941.04±
BOUND	PIER 3	958.12	958.60	958.92	959.08	946.26±
RIGHT BR.	PIER 1	949.28	949.76	950.09	950.25	937.04±
NORTH	PIER 2	954.47	954.95	955.27	955.43	942.55±
BOUND	PIER 3	959.66	960.14	960.46	960.62	947.85±

DESIGN AGENCY
KORDA
KORDA/NEMETH ENGINEERING
1650 WATERMARK DRIVE, SUITE 200
COLUMBUS, OHIO 43215-1094
WEB www.korda.com
TEL (614) 487-6500
FAX (614) 487-6591

DESIGNED	DRAWN	REVIEWED	DATE
CAB	CAB	RWE	2/02/07
CHECKED	REVISED	STRUCTURE FILE NUMBER	
JKS		7600488L/7600518R	

PIER CAP DETAILS (PIERS 1, 2 & 3)
BRIDGE NO.: STA-21-1248 L & R
OVER TUSCARAWAS RIVER, R.J. CORMAN R.R. AND T.R.353

STA-21-12.48
PID No. 25433

H:\Projects\2006\2006-0007 STA-21-12_48 Part 2\Structural-Bridge\Drawings\017_021_1248LP1003.DGN 2/12/2007 2:02:27 PM
017_021_1248LP1003.DGN

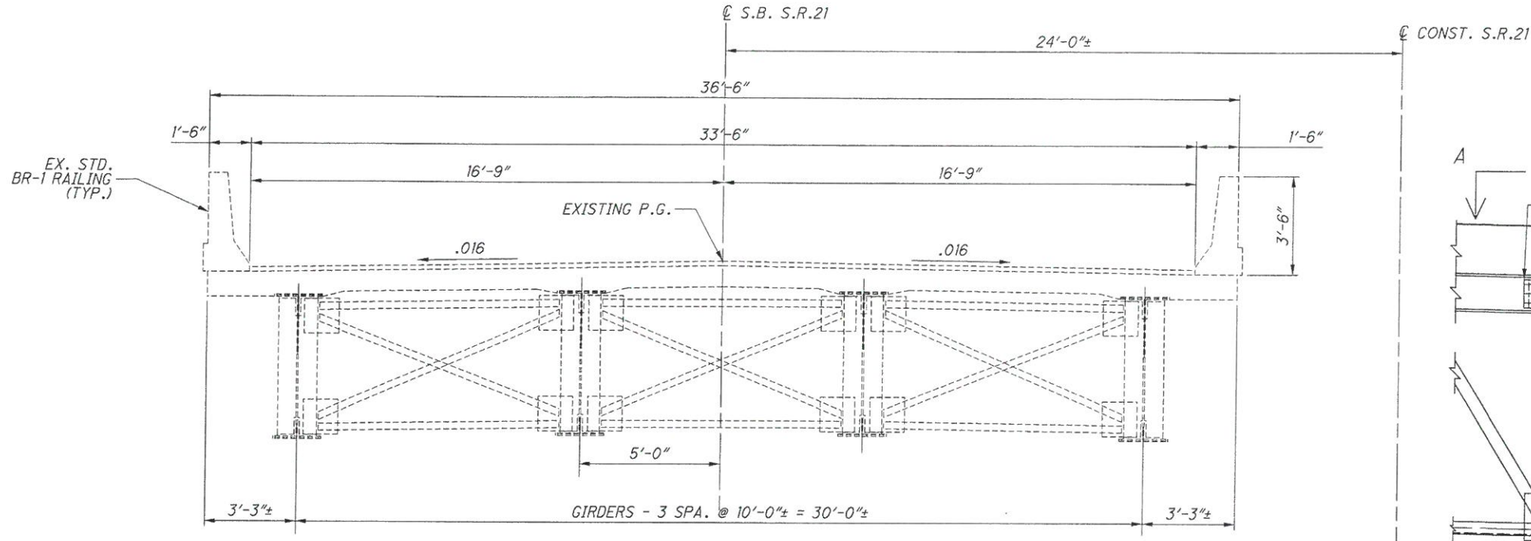

EXISTING TYPICAL SECTION
(LT. SHOWN, RT. SIMILAR)

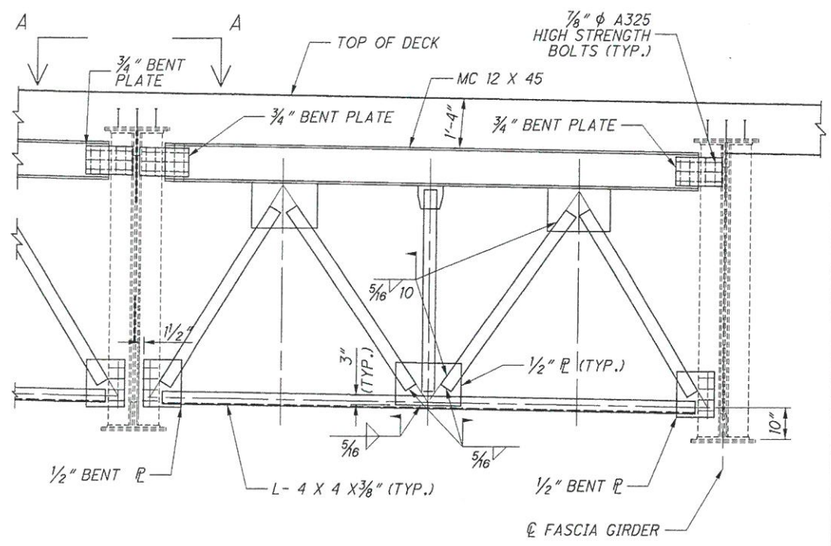

PARTIAL ELEVATION OF END CROSSFRAME

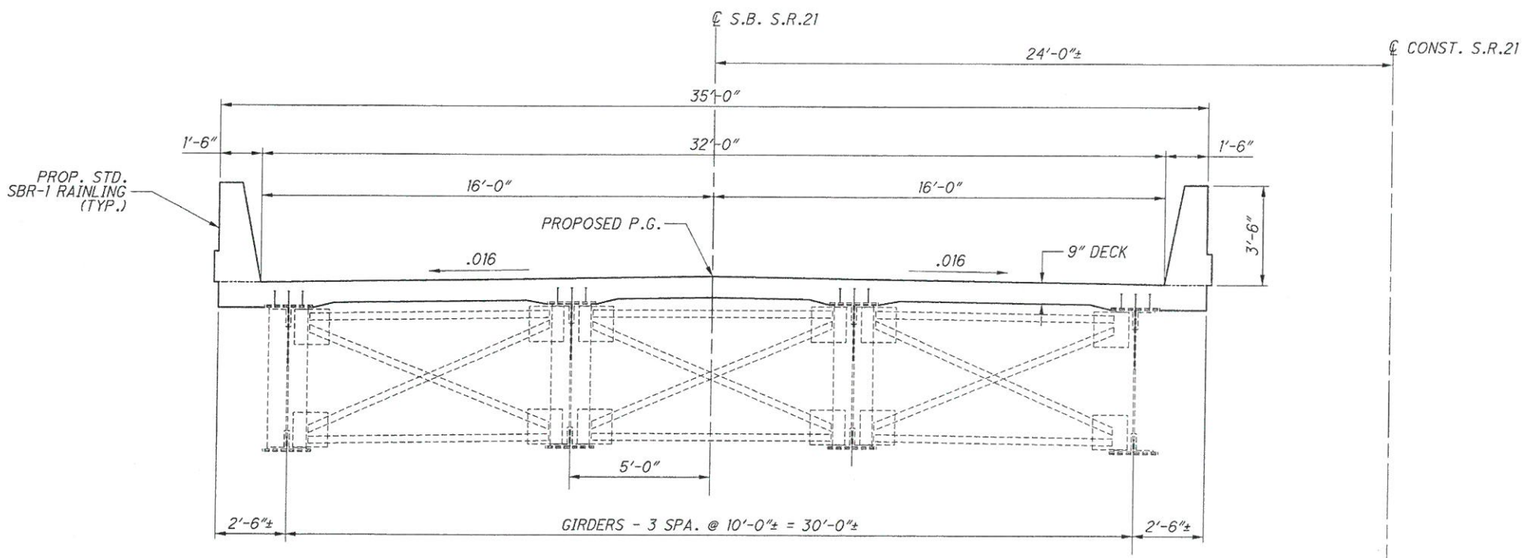

PROPOSED TYPICAL SECTION
(LT. SHOWN, RT. SIMILAR)

NOTE: THE WELDING SYMBOLS SHOWN ABOVE ARE TYPICAL FOR ALL SIMILAR LOCATIONS THE END CROSSFRAMES

ALL END CROSSFRAME MATERIAL SHALL BE A709 GRADE 50.

ALL BOLTS SHALL BE A325, TYPE 1 BOLTS. EACH ANCHOR ASSEMBLY SHALL INCLUDE A BOLT, NUT AND TWO WASHERS, TIGHTENED ACCORDING TO 513.

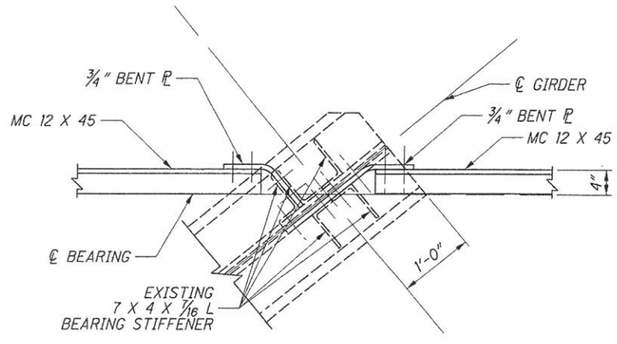

SECTION A-A

DESIGN AGENCY
KORDA
KORDA/NEMETH ENGINEERING
1650 WATERMARK DRIVE, SUITE 200
COLUMBUS, OHIO 43215-1094
WEB www.korda.com
TEL (614) 487-9650
FAX (614) 487-9981

DESIGNED	DRAWN	REVIEWED	DATE
JKS	JM	RWE	7/27/06
CHECKED	REVISED	STRUCTURE FILE NUMBER	
JKS		7600488L/7600518R	

TYPICAL SECTIONS
BRIDGE NO.: STA-21-1248 L & R
OVER TUSCARAWAS RIVER, R.J. CORMAN R.R. AND T.R.353

STA-21-12.48
PID No. 25433

H:\Projects\2006\2006-0007 STA-21-12.48 Part 2\Structural-Bridge\Drawings\018_021_1248LTS001.dgn 2/12/2007 2:36:38 PM
018_021_1248LTS001.dgn

ITEM 513 - STRUCTURAL STEEL, MISC.: PACK RUST REPAIR AND CAULKING

DESCRIPTION:
THIS ITEM SHALL INCLUDE THE REPAIR OF PACK-RUSTED AREAS AND THE CAULKING OF JOINTS BETWEEN ADJACENT STEEL PIECES OF BUILT-UP MEMBERS AND JOINTS AS SHOWN IN THE PLANS AND DIRECTED BY THE ENGINEER. PACK-RUSTED AREAS ARE DEFINED AS THOSE LOCATIONS WHERE ADJACENT STEEL PLATES ARE RUSTED APART MORE THAN 1/8".

THE ACTUAL AMOUNT OF REPAIRING OF PACK-RUSTED AREAS AND CAULKING OF JOINTS BETWEEN ADJACENT STEEL PIECES OF BUILT-UP MEMBERS AND JOINTS SHALL BE DETERMINED IN FIELD IN THE PRESENCE OF THE PROJECT ENGINEER.

PACK RUST REMOVAL, ABRASIVE BLASTING OF THE MEMBERS, ANY STRUCTURAL STEEL WORK INCLUDING REPLACEMENT OF ANY WARPED PLATES OR RIVETS AND APPLICATION OF THE PRIME AND INTERMEDIATE COATS ACCORDING TO THE OZEU SPECIFICATION (OR APPLICATION OF A METALLIZED COATING SPECIFICATION) SHALL BE COMPLETED BEFORE CAULKING OF THE JOINT IS PERFORMED. THE CONTRACTOR HAS THE OPTION TO PERFORM THIS WORK BEFORE REMOVAL OF THE EXISTING DECK, HOWEVER, IF THIS IS DONE, APPLICATION OF THE PRIME AND INTERMEDIATE COATS SHALL BE LIMITED TO THE ENTIRE BOTTOM FLANGE AND ONE (1) FOOT OF THE WEB ABOVE THE TOP OF THE BOTTOM FLANGE PLATES. CAULKING SHALL BE PER CMS ITEM 514.19.

ONCE THE PACK RUST IS REMOVED, AND IMMEDIATELY AFTER ABRASIVE BLASTING OF THE MEMBER, DAMAGE ASSESSMENT OF THE WARPED PLATES AND RIVETS SHALL BE PERFORMED BY FIELD INSPECTION WITHIN THE PRESENCE OF THE ENGINEER. THE RIVETS AND ANY WARPED PLATES IN THE AFFECTED AREAS SHALL BE CHECKED TO DETERMINE IF THEY ARE LOOSE OR EXHIBIT SECTION LOSS. THE ENGINEER WILL CHECK THOSE RIVETS AND MAY REQUEST REPLACEMENT OF RIVETS WHICH ARE LOOSE OR HAVE EXCESSIVE SECTION LOSS UNDER ITEM 513 - STRUCTURAL STEEL, MISC.: REPLACE EXISTING RIVETS WITH HIGH STRENGTH BOLTS. IF THE ENGINEER REQUESTS REPLACEMENT OF ANY RIVETS, IT SHALL BE DONE PRIOR TO PLACEMENT OF THE COATING SYSTEM. BOTH THE TOP AND BOTTOM RIVET HEADS SHALL BE GROUND SMOOTH WITH THE GIRDER FLANGE PLATES. EXTREME CARE SHALL BE TAKEN NOT TO DAMAGE THE GIRDER FLANGE PLATES AND ANGLES. THE RIVET SHALL BE BE REMOVED AND THE EXISTING RIVET HOLE SHALL BE THOROUGHLY CLEANED. A 7/8" DIAMETER, GALVANIZED, A325, HIGH STRENGTH BOLT SHALL BE PLACED IN THE HOLE AND TIGHTENED ACCORDING TO CMS 513.20.

IF IT IS DETERMINED BY THE FIELD INSPECTION THAT THERE ARE WARPED PLATES THAT NEED REPLACED, PERFORM THIS WORK FOR FIELD FABRICATED MEMBERS ACCORDING TO ITEM 513, EXCEPT AS MODIFIED HEREIN. THE DEPARTMENT WILL NOT REQUIRE THE CONTRACTOR PERFORMING FIELD FABRICATION TO BE PRE-QUALIFIED AS SPECIFIED IN SUPPLEMENT 1078. SUBMIT A WRITTEN LETTER OF REPLACEMENT PROCEDURE AND DETAIL PLAN, WITH PROFESSIONAL ENGINEER, SEAL, TO THE ENGINEER FOR REVIEW. THE MATERIAL USED FOR THE PROPOSED PLATES SHALL CONFORM TO ASTM A709 GRADE 36. SUPPLY THE ENGINEER WITH "AS-BUILT" DRAWINGS MEETING 513.04 AFTER COMPLETION OF FIELD FABRICATION. THE ENGINEER WILL REVIEW THE SUBMITTED DRAWINGS FOR CONCURRENCE WITH THE FINAL AS-BUILT CONDITION. IF THE ENGINEER IS SATISFIED WITH THE "AS-BUILT" DRAWINGS AND THE DELIVER MATERIALS, SUPPLY A COPY OF THE DRAWINGS, WITH PROFESSIONAL ENGINEER SEAL AND DATED, ALONG WITH MICROFILM, TO THE STRUCTURAL, WELDING AND METALS SECTION OF THE OFFICE OF MATERIAL MANAGEMENT FOR RECORD PURPOSES. ALL MATERIALS, TOOLS, LABOR, EQUIPMENT AND INCIDENTALS NECESSARY TO COMPLETE THE REPLACEMENT OF THE WAPRED PLATE SHALL BE INCLUDED FOR PAYMENT WITH ITEM 513 - STRUCTURAL STEEL, MISC.: REPLACEMENT OF WARPED PLATES.

SURFACE PREPARATION:
PORTIONS OF JOINTS THAT HAVE PACK-RUST SHALL RECEIVE PREPARATION IN ADDITION TO THE ABRASIVE BLAST REQUIRED BY THE SELECTED COATING SPECIFICATION. PACK RUST SHALL BE REMOVED FROM JOINTS RUSTED APART MORE THAN 1/4" BY CHIPPING, HEATING, HAMMERING, PUNCHING, CHISELING OR BY OTHER SUITABLE MEANS TO A DEPTH AT LEAST EQUAL TO THE WIDTH OF THE GAP PRIOR TO ANY ABRASIVE BLASTING. ALL AREAS RECEIVING PACK RUST REPAIR SHALL BE CLEANED BY ABRASIVE BLASTING TO THE NEAR-WHITE SURFACE PREPARATION GRADE (SSPC-SP10), MAKING SURE THAT THE AREAS WITH GAPS FROM 1/8" TO 1/4" ARE CLEANED TO A DEPTH AT LEAST EQUAL TO THE GAP WIDTH. ALL JOINTS SHALL THEN BE VACUUMED WITH A COMMERCIAL VACUUM CLEANER HAVING A NOZZLE OPENING OF 1" TO 1 1/2" OR AIR BLOWN SUCH THAT ALL DUST AND DEBRIS ARE REMOVED TO THE SATISFACTION OF THE ENGINEER. THE PRIME COAT AND INTERMEDIATE COAT SHALL BE APPLIED TO THE MEMBER ACCORDING TO THE OZEU SPECIFICATION AND THE INTERMEDIATE COAT SHALL BE FULLY CURED AND FREE OF SOLVENT WHEN THE CAULKING IS APPLIED. THE FINISH COAT CAN BE APPLIED AFTER THE CAULKING IS CURED. IF A METALLIZING COATING SYSTEM IS USED, CAULKING SHALL BE PERFORMED AFTER METALLIZING OF THE STEEL IS COMPLETE.

MATERIALS:
THE CAULKING MATERIAL SHALL BE A TWO-COMPONENT, 100% SOLIDS, NON-SAG, NON-SHRINK, EPOXY BASED SYSTEM, CAPABLE OF FILLING THE GAPS CREATED BY THE PACK RUST REMOVAL. THE CAULKING MATERIAL SHALL HAVE A GEL OR PASTE CONSISTENCY, HAVE AN EXCELLENT ADHESION TO THE INTERMEDIATE COAT, AND BE SUITABLE FOR APPLICATION TO VERTICAL AND OVERHEAD AREAS. THE EPOXY SYSTEM SHALL BE TESTED PRIOR TO USE.

WHEN MANUFACTURED, THE FORMULATIONS SHALL CONTAIN NO UN-REACTIVE DILUENTS, SOLVENTS, OR OTHER FILLERS. THE CAULKING MATERIAL SHALL CONFORM TO THE FOLLOWING PERFORMANCE REQUIREMENTS.

A TENSILE PROPERTIES (ASTM D-638)
1. TENSILE ULTIMATE STRENGTH (14 DAY) ..... 4000 PSI (MIN)
2. TENSILE ELONGATION AT BREAK ..... 1.3% - 2.5%
3. TENSILE MODULUS OF ELASTICITY ..... 250000 PSI (MIN)

B BOND STRENGTH (ASTM C-882)
1. 2 DAY DRY CURE CAULKING TO STEEL ..... 2600 PSI (MIN)

C HEAT DEFLECTION TEMPERATURE (ASTM D-648)
1. 7 DAY, FIBER STRESS LOADING = 264 PSI ... 120 DEGREES F

D WATER ABSORPTION (ASTM D-570)
1. 7 DAY, 24 HOUR IMMERSION ..... 0.6% (MAX)

E FLEXURAL PROPERTIES (ASTM D-790)
1. FLEXURAL STRENGTH (14 DAY) ..... 6500 PSI (MIN)
2. TANGENT MODULUS OF ELASTICITY IN BENDING ..... 700000 PSI

THE CAULKING MATERIAL PROPOSED FOR USE SHALL BE PREQUALIFIED. PRIOR TO APPROVAL, COPIES OF THE MANUFACTURER'S CERTIFIED TEST DATA SHOWING THAT THE EPOXY SYSTEM COMPLIES WITH THE PERFORMANCE REQUIREMENTS OF THIS SPECIFICATION SHALL BE SUBMITTED TO THE ENGINEER OF TESTS, OFFICE OF MATERIALS MANAGEMENT 1600 W. BROAD ST. COLUMBUS, OHIO 43223. THE CERTIFIED TEST DATA SHALL ALSO STATE THE FOLLOWING PHYSICAL PROPERTIES FOR COMPONENT A, COMPONENT B, AND THE MIXTURE:

1. COLOR
2. PERCENT SOLIDS
3. SHELF LIFE
4. VISCOSITY (CPS)
5. MIXING RATIO
6. POT LIFE
7. GEL TIME
8. CONSISTENCY

THE TEST DATA SHALL BE DEVELOPED BY AN INDEPENDENT TESTING LABORATORY APPROVED BY THE DIRECTOR AND SHALL INCLUDE THE BRAND NAME OF MANUFACTURER, NUMBER OF LOTS TESTED, AND DATE OF MANUFACTURE.

THE FOLLOWING ITEMS SHALL ALSO BE SUBMITTED TO THE DIRECTOR PRIOR TO APPROVAL:

1. MANUFACTURER'S TECHNICAL DATA SHEET FOR EACH COMPONENT.
2. MATERIAL SAFETY DATA SHEET FOR EACH COMPONENT.
3. ENOUGH COMPONENTS TO PRODUCE A QUART SAMPLE OF CAULKING.
4. A ONE QUART SAMPLE OF THE SOLVENT TO BE USED FOR CLEANUP.

WHEN CAULKING MATERIAL HAS BEEN APPROVED BY THE ENGINEER, FURTHER PERFORMANCE TESTING BY THE MANUFACTURER WILL NOT BE REQUIRED UNLESS THE FORMULATION OR MANUFACTURING PROCESS HAS BEEN CHANGED IN WHICH CASE NEW CERTIFIED TEST RESULTS WILL BE REQUIRED. ACCEPTANCE VARIANCES SHALL BE ESTABLISHED BY THE ENGINEER.

THE CONTRACTOR SHALL FURNISH THE ENGINEER A COPY OF THE MANUFACTURER'S COMPREHENSIVE JOB SPECIFIC PREPARATION, MIXING AND APPLICATION INSTRUCTIONS. ANY SIGNIFICANT CHANGES TO THESE INSTRUCTIONS WHICH ARE RECOMMENDED BY THE REPRESENTATIVE FOR AN UNANTICIPATED SITUATION SHALL BE APPROVED BY THE ENGINEER PRIOR TO THE ADOPTION OF SUCH CHANGES.

APPLICATION:
THE CAULKING SHALL BE APPLIED EVENLY TO THE JOINTS AND GAPS AS DEPICTED IN TYPICAL PLAN DETAILS. VOIDS SHALL BE COMPLETELY FILLED WITH CAULKING GUN AND SHALL BE SPREAD SMOOTHLY USING HEAVY PRESSURE TO DISPLACE AIR BUBBLES. EXCESS MATERIAL SHALL BE REMOVED IMMEDIATELY. ALL PROCEDURES SHALL CONFORM TO THE REQUIREMENTS OF THE CAULKING MANUFACTURER WHO SHALL PROVIDE A TECHNICAL REPRESENTATIVE AT THE SITE AS DIRECTED BY THE PROJECT ENGINEER.

PAYMENT:
PAYMENT FOR ACCEPTED QUANTITIES, COMPLETE IN PLACE, SHALL BE MADE AT THE CONTRACT PRICE BID PER LINEAR FOOT FOR ITEM 513 - STRUCTURAL STEEL, MISC.: PACK RUST REPAIR AND CAULKING. THIS SHALL INCLUDE ALL NECESSARY TOOLS, LABOR, EQUIPMENT AND MATERIALS NECESSARY TO COMPLETE THIS ITEM OF WORK AS DESCRIBED AND TO THE SATISFACTION OF THE ENGINEER.

THE DEPARTMENT WILL PAY FOR THE ACCEPTED QUANTITIES OF THE WARPED PLATES AND RIVET REPLACEMENTS THAT HAVE BEEN VERIFIED IN THE FIELD ACCORDING TO THE FOLLOWING PAY ITEMS: ITEM 513 - STRUCTURAL STEEL, MISC.: REPLACEMENT OF WARPED PLATES, AND ITEM 513 - STRUCTURAL STEEL, MISC.: REPLACE EXISTING RIVETS WITH HIGH STRENGTH BOLTS. THE FOLLOWING CONTINGENCY QUANTITIES HAVE BEEN INCLUDED, IN LIEU OF ACTUAL QUANTITIES YET TO BE DETERMINED IN THE FIELD:

ITEM 513 - STRUCTURAL STEEL, MISC.:	REPLACEMENT OF WARPED PLATES = 1000 LBS
ITEM 513 - STRUCTURAL STEEL, MISC.:	REPLACE EXISTING RIVETS WITH HIGH STRENGTH BOLTS = 100 EACH

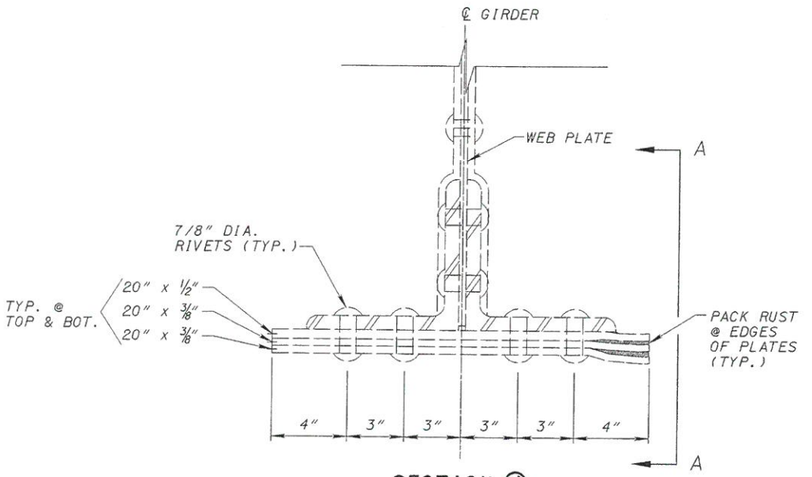

SECTION ①
TYP. AT PIERS

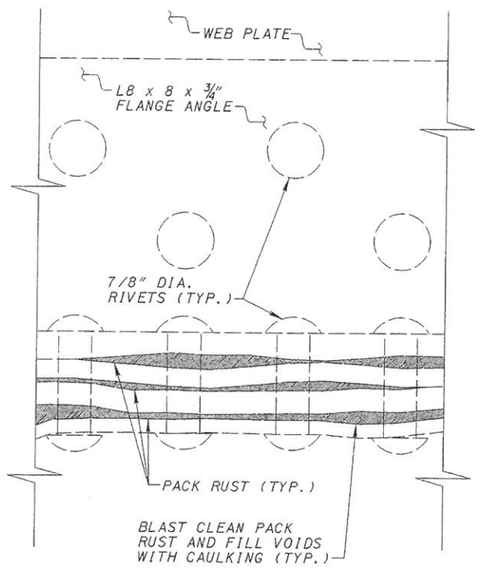

DETAIL A-A

DESIGN AGENCY
MAKE FILE SHOWN BEING S DENMAN, INC.
GPD ASSOCIATES

DESIGNED	DRAWN	REVIEWED	DATE
GGN	RHC	DJP	12-07-06
CHECKED	REVISED	STRUCTURE FILE NUMBER	
DJC		7600488L/7600518R	

GIRDER REPAIR DETAILS
BRIDGE NO. STA-21-1248L&R
S.R. 21 OVER TUSCAWARAS RIVER, RJ CORMAN RR & TOWNSHIP ROAD 353

STA-21-12.48

19 / 34

108 / 124

\\Akron01\Data\civil\2004054\00\STA\25433\bridge\STA021L248S\sheets\018_021L248L5000.dgn
2/8/2007
9:03 AM
DPAUKOVIC

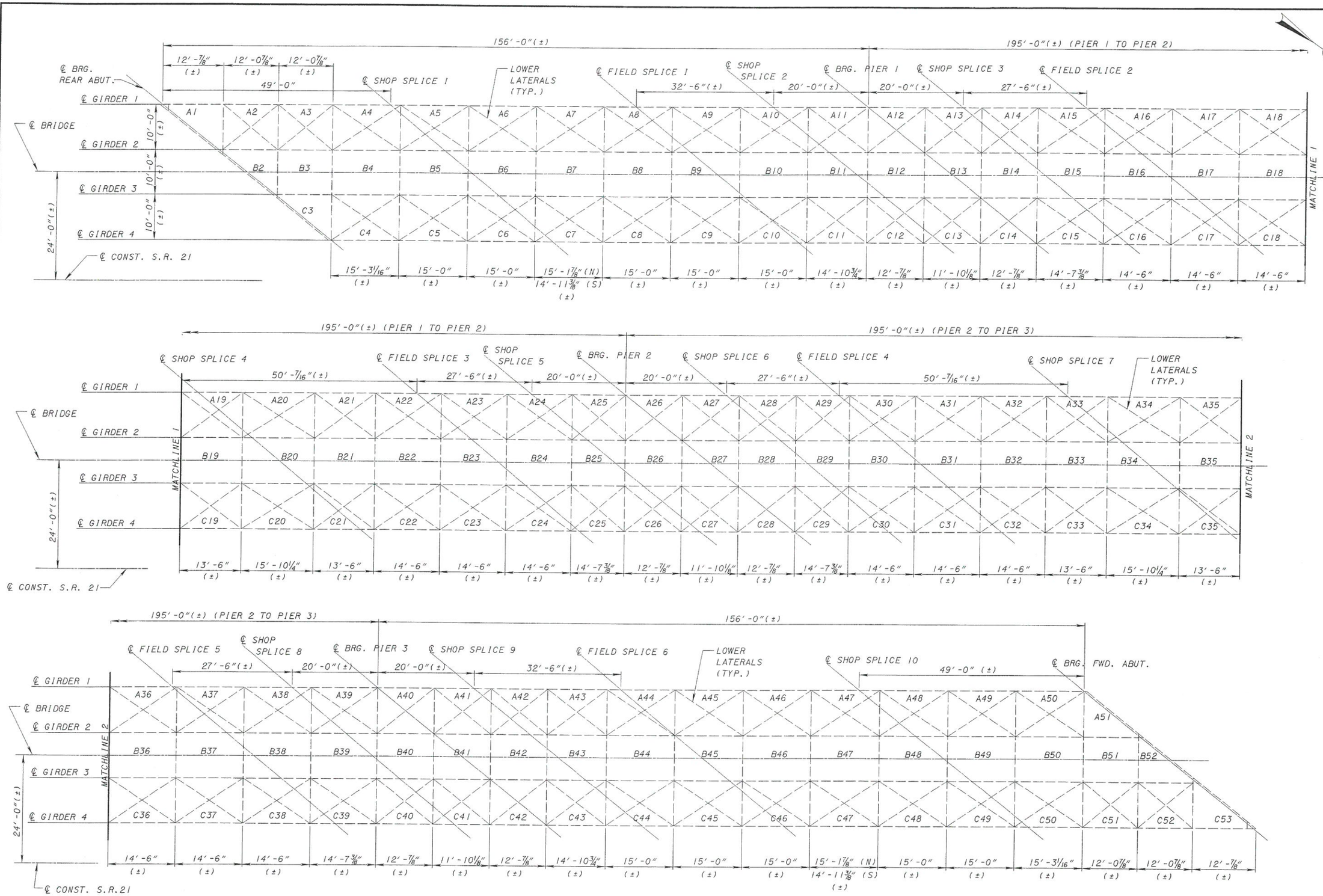

FRAMING PLAN

(PLAN SHOWN FOR LEFT BRIDGE, RIGHT BRIDGE SIMILAR.)

LEGEND:
(N) = NORTH
(S) = SOUTH
A4 = BAY NUMBER

DESIGN AGENCY
BLAIR-HAMMOND-WOLFE-KENNEDY, INC.
GPD ASSOCIATES
320 South Main Street, Suite 350 Akron, Ohio 44311
330-572-2100, Fax 330-572-2101

DESIGNED	DRAWN	REVISED	DATE
GTP	GTP	GGN	12-07-06
CHECKED	REVISED	STRUCTURE FILE NUMBER	
DJC		7600488L/7600518R	

FRAMING PLAN (EXISTING)

BRIDGE NO. STA-21-1248L&R
S.R. 21 OVER TUSCAWARAS RIVER, RJ CORMAN RR & TOWNSHIP ROAD 353

STA-21-12.48
PID No. 25433

20/34
109/124

\\Akron\Data\civil\2004054\GD\STA\25433\bridge\STA02L1248S\sheets\09_02L1248L-SD002.dgn
2/8/2007
7:44:08 AM
DPALKOVIC

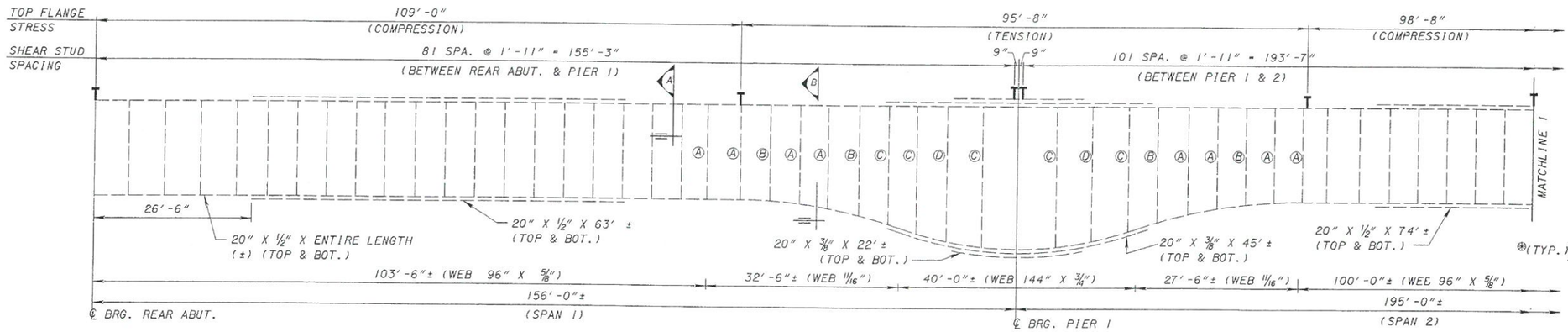

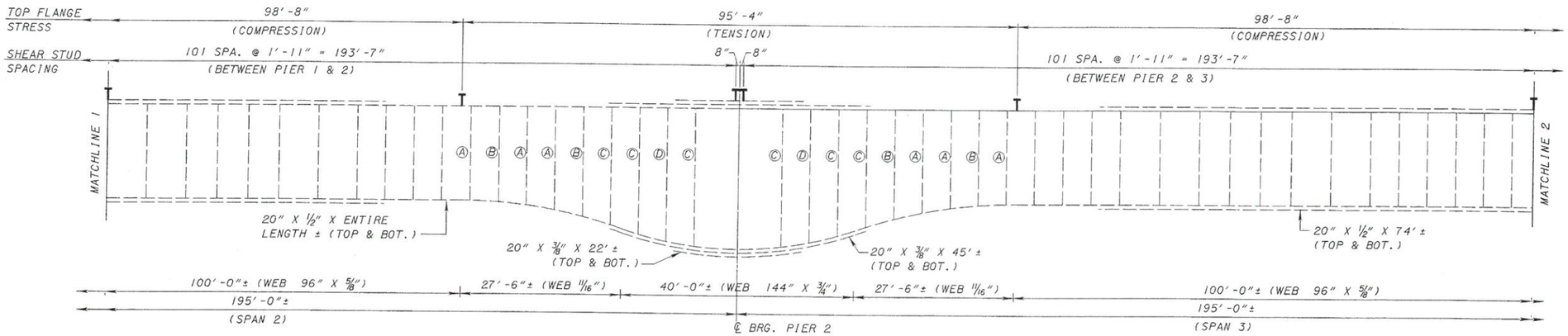

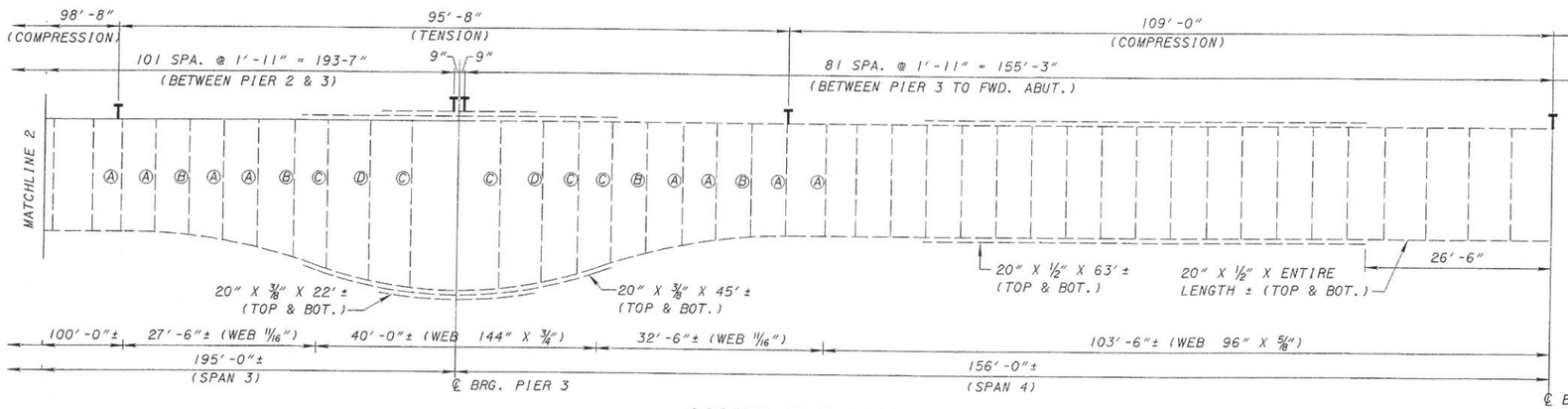

GIRDER ELEVATION

(ELEVATION SHOWN FOR LEFT BRIDGE. RIGHT BRIDGE SIMILAR.)

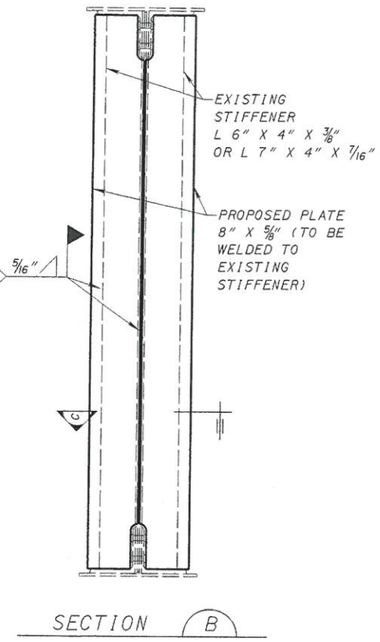

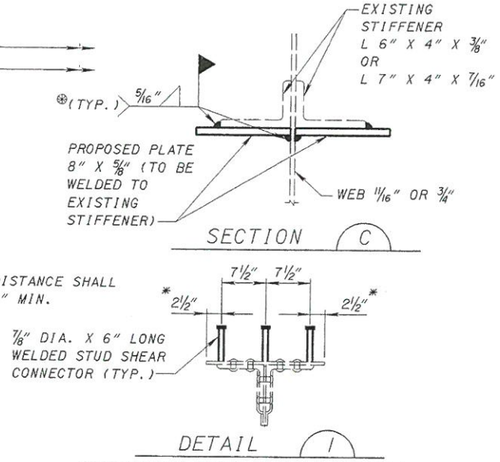

STUD SPACING SHOWN IS TENTATIVE ONLY. STUDS SHALL BE PLACED TO AVOID INTERFERENCE WITH EXISTING RIVET HEADS AND SHALL BE SPACED AROUND RIVETS TO FIT THE MINIMUM STUD WELD. AT NO TIME SHALL THE DISTANCE FROM THE EDGE OF THE FLANGE PLATES TO THE CENTER OF STUDS BE LESS THAN 1 7/16"

NOTES:

1. WELD ATTACHMENT OF SUPPORTS FOR CONCRETE DECK FINISHING MACHINE TO AREAS OF THE FASCIA STRINGER FLANGES DESIGNATED "COMPRESSION". DO NOT WELD ATTACHMENTS TO AREAS DESIGNATED "TENSION". FILLET WELDS TO COMPRESSION FLANGES SHALL BE AT LEAST 1" FROM EDGE OF FLANGE, BE NO MORE THAN 2" LONG, & BE ATLEAST 1/4" FOR THICKNESSES UPTO 3/4" OR 5/16" FOR GREATER THAN 3/4" THICK.
2. FOR PACK RUST INFORMATION AND REPAIR DETAILS, SEE SHEET NO. 19|34 .

△ THE ACTUAL HEIGHT AND SHAPE OF THE PROPOSED STIFFENER PLATE SHALL BE FIELD VERIFIED BY THE CONTRACTOR PRIOR TO FABRICATION.

⊛ THE FILLET WELD SHALL BE TERMINATED 1/2" BEFORE THE END OF PROPOSED STIFFENER PLATE. THE WELDING OF THE PROPOSED PLATE TO THE EXISTING ANGLE STIFFENERS SHALL BE PERFORMED AFTER THE EXISTING STEEL HAS BEEN PREPARED ACCORDING TO ITEM 514 - SURFACE PREPARATION OF EXISTING STRUCTURAL STEEL, AND BEFORE PLACEMENT OF THE COATING SYSTEM.

STIFFENER DETAIL TABLE △

MARK	EXISTING STIFFENER	PROPOSED ADDITIONAL PLATE (TO BE WELDED TO EXISTING STIFFENER)
Ⓐ	L 6" X 4" X 3/8" CRIMPED	PL 8" X 5/8" (CRIMPED MAX. 1")
Ⓑ	L 6" X 4" X 3/8" WITH FILLS	PL 8" X 5/8" (WITH 3/4" THICK FILLS)
Ⓒ	L 7" X 4" X 7/16" CRIMPED	PL 8" X 5/8" (CRIMPED MAX. 1")
Ⓓ	L 7" X 4" X 7/16" WITH FILLS	PL 8" X 5/8" (WITH 3/4" TH. FILLS)

DESIGN AGENCY
GPD ASSOCIATES
320 South Main Street, Suite 350, Akron, Ohio 44311
330-572-2100, Fax 330-572-2101

REVISED	DATE
GGN	12-07-06
STRUCTURE FILE NUMBER	
7600488L/7600518R	

DESIGNED	DRAWN	REVISED
GTP	GTP	
CHECKED		
DJC		

GIRDER ELEVATION

BRIDGE NO. STA-21-1248
S.R. 21 OVER TUSCAWARAS RIVER, RJ CORMAN RR & TOWNSHIP ROAD 353

STA-21-12.48
PID No. 25433

21 | 34

110 | 124

\\Akron\Data\clk\W\2004054\00\STA\25433\bridge\STA021_12485\sheets\020_021_1248L50003.dgn
2/8/2007
7:44:21 AM
BPALKOVIC

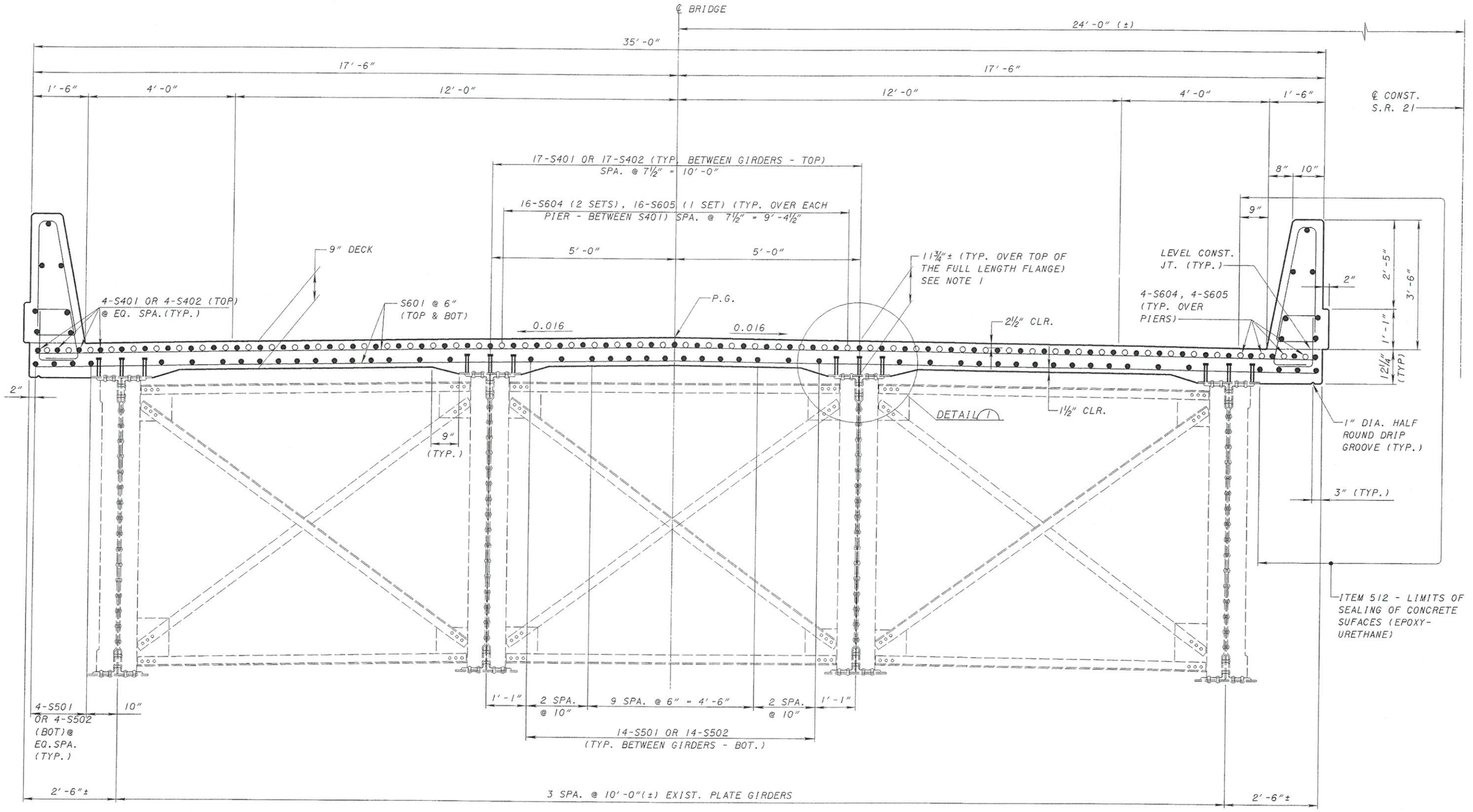

TRANSVERSE SECTION

(LEFT BRIDGE SHOWN, RIGHT BRIDGE SIMILAR.)

NOTES

1. DECK SLAB CONCRETE QUANTITY: THE ESTIMATED QUANTITY OF DECK SLAB CONCRETE IS BASED ON THE CONSTANT DECK SLAB THICKNESS, AS SHOWN, PLUS THE QUANTITY OF CONCRETE THAT FORMS EACH BEAM/GIRDER HAUNCH. THE ESTIMATE ASSUMES A MINIMUM HAUNCH THICKNESS OF 2" AND A CONSTANT HAUNCH WIDTH OUTSIDE THE EDGE OF EACH GIRDER FLANGE OF 9". DEVIATE FROM THIS HAUNCH THICKNESS AS NECESSARY TO PLACE THE DECK SURFACE AT THE FINISHED GRADE. THE ALLOWABLE TOLERANCE FOR THE HAUNCH WIDTH OUTSIDE THE EDGE OF EACH GIRDER FLANGE IS +3". THE DECK THICKNESS OVER GIRDERS WAS MEASURED AT THE CENTERLINE OF GIRDER FROM THE SURFACE OF THE DECK TO THE TOP OF THE FULL LENGTH TOP FLANGE. THE AREA OF ALL EMBEDDED STEEL PLATES HAS BEEN DEDUCTED FROM THE HAUNCH QUANTITY IN ACCORDANCE WITH 511.24
2. FOR DECK SLAB PLAN, SEE SHT NO. 23/34.
3. FOR DETAIL 1, SEE SHT NO. 21/34.

DESIGN AGENCY
GLAMS PILE SCHEMER BURNS & DEVANEY, INC.
GPD ASSOCIATES
520 South Main Street, Suite 2531 Akron, Ohio 44311
330-577-2100 . Fax 330-572-2101

DESIGNED	DRAWN	REVIEWED	DATE
GTP	GTP	GGN	12-07-06
CHECKED	REVISED	STRUCTURE FILE NUMBER	
DJC		7600488L/7600518R	

TRANSVERSE SECTION
BRIDGE NO. STA-21-1248L&R
S.R. 21 OVER TUSCAWARAS RIVER, RJ CORMAN RR & TOWNSHIP ROAD 353

STA-21-12.48
PID No. 25433

\\Akrn01\Data\civil\2004054\00\STA\25433\bridge\STA021L1248S\sheets\021_021L1248LTS002.dgn
2/8/2007
8:08:17 AM
DPALKOVIC

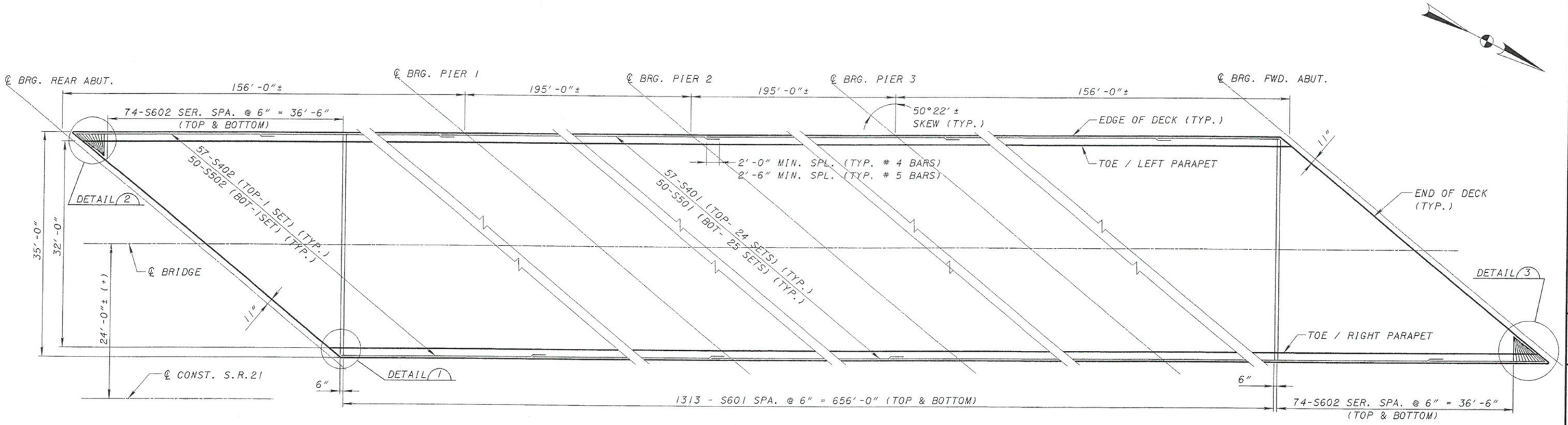

PLAN

(DECK SHOWN FOR LEFT BRIDGE. RIGHT BRIDGE SIMILAR)

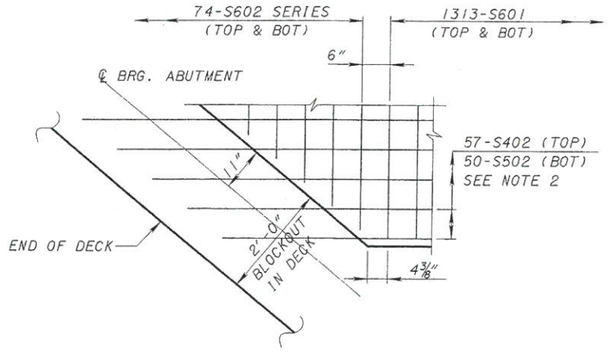

DETAIL 1

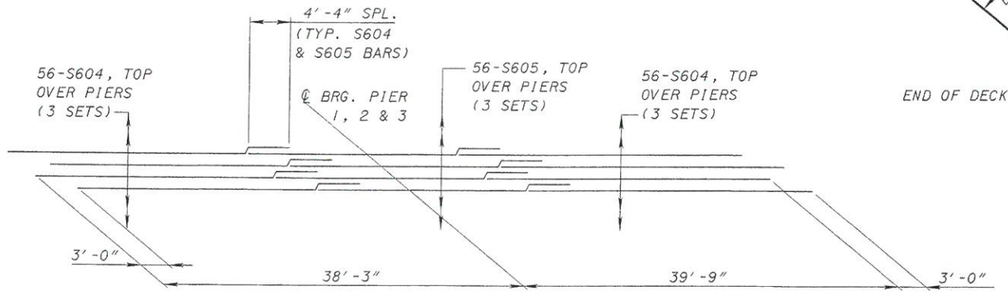

STAGGER DIAGRAM

(ADDITIONAL BARS OVER PIERS 1,2 AND 3)

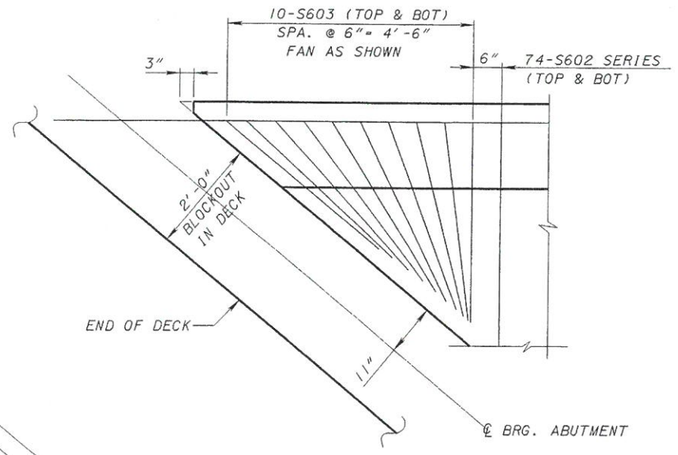

DETAIL 2

DETAIL 3

DETAIL 2 SHOWN,
DETAIL 3 SIMILAR BUT OPPOSITE

NOTE:

1. FOR PARAPET BARS & SAWCUT LOCATIONS, SEE SHT NO. 26/34.
2. THE LAP LENGTH OF THE S402 & S502 DECK SLAB BARS TO THE S401 & S501 BARS, RESPECTIVELY, SHALL BE INCREASED TO AVOID INTERFERENCE WITH THE PROPOSED JOINT ELEMENTS.

DESIGN AGENCY
GLAMP PILE SCHOWER BURNS & DENNEN, INC.
GPD ASSOCIATES
320 South Main Street, Suite 2551 Akron, Ohio 44311
330-572-2100 , Fax 330-572-2101

DESIGNED	DRAWN	REVIEWED	DATE
GTP	GTP	GGN	12-07-06
CHECKED	REVISED	STRUCTURE FILE NUMBER	
DJC		7600488L/7600518R	

DECK SLAB PLAN

BRIDGE NO. STA-21-1248L&R
S.R. 21 OVER TUSCAWARAS RIVER, RJ CORMAN RR & TOWNSHIP ROAD 353

STA-21-12.48
PID No. 25433

\\Akrn01\Data\civil\2004054\00\STA\25433\bridge\STA021_1248S\sheets\022_021_1248LDP001.dgn
2/8/2007
7:46:15 AM
DPALKOVIC

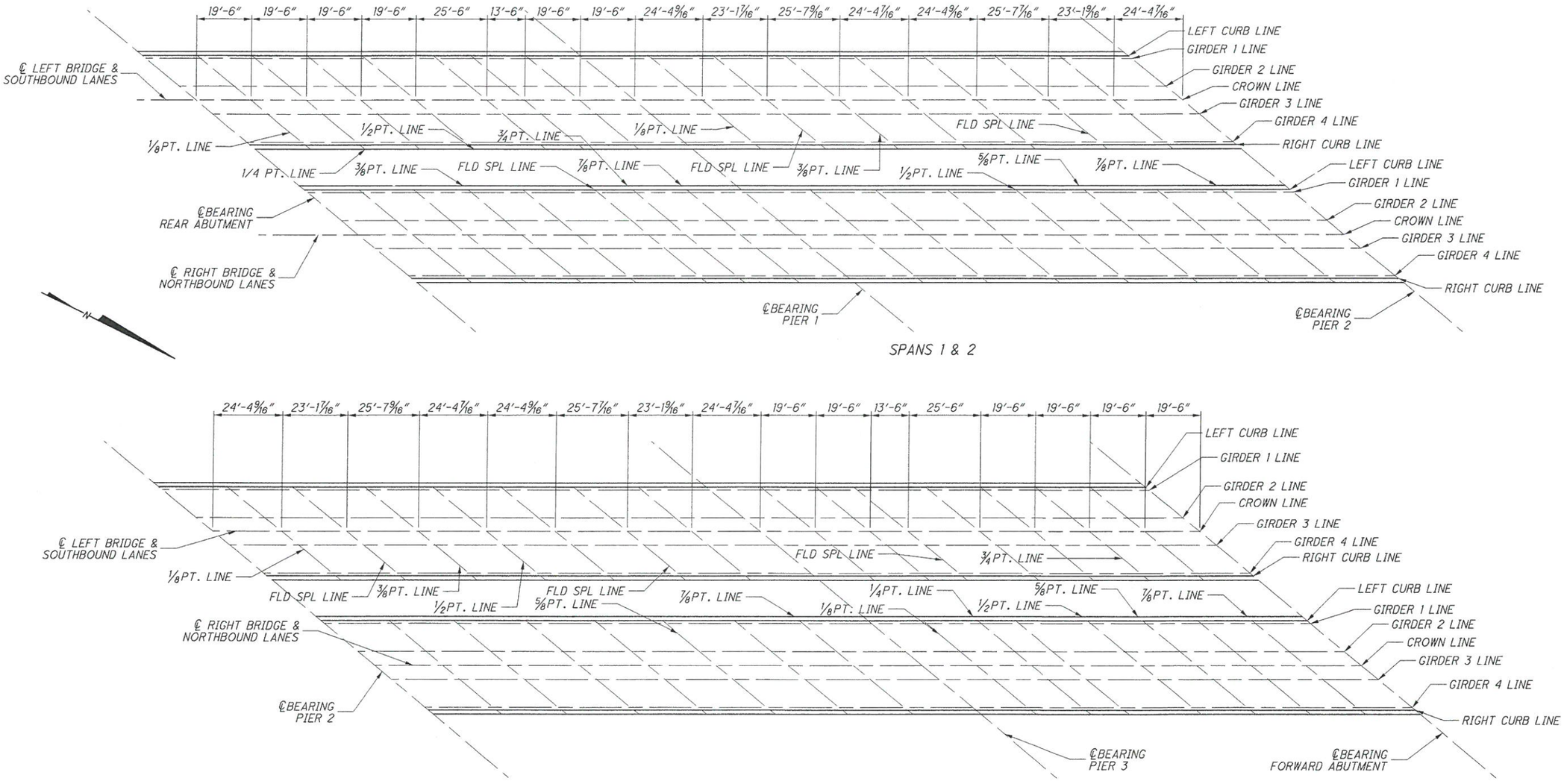

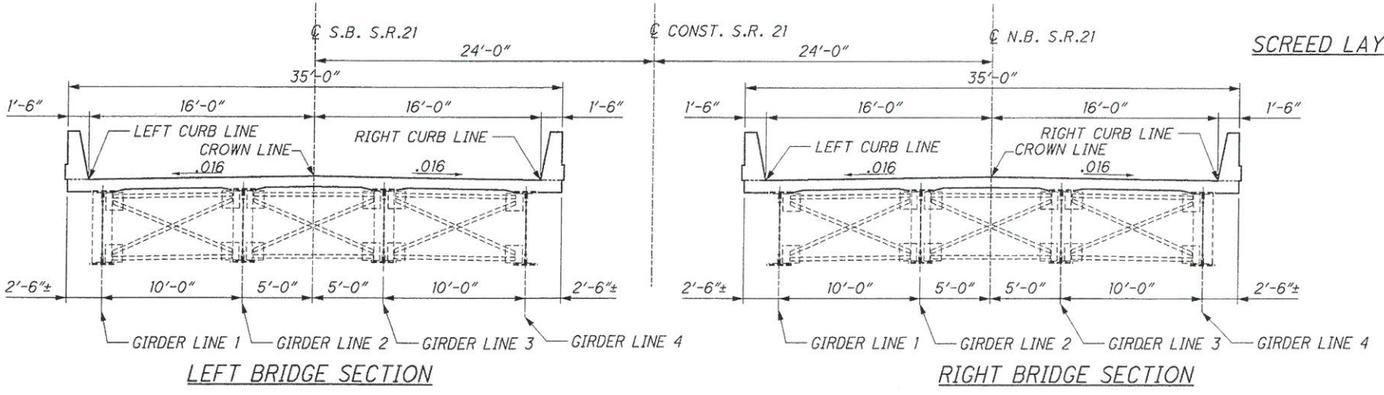

SCREED LAYOUT PLAN

SEE SHEET 25/34 FOR SCREED ELEVATION

DESIGN AGENCY
KORDA
KORDA/NEMETH ENGINEERING
6500 WATERMARK DRIVE, SUITE 200
COLUMBUS, OHIO 43235-3091
TEL (614) 487-1650
FAX (614) 481-8981
WEB www.korda.com

DESIGNED	DRAWN	REVIEWED	DATE
CAB	CAB	RWE	7/27/06
CHECKED	REVISED	STRUCTURE FILE NUMBER	
JKS		7600488L/7600518R	

SCREED LAYOUT PLAN
BRIDGE NO.: STA-21-1248 L & R
OVER TUSCARAWAS RIVER, R.J. CORMAN R.R. AND T.R.353

STA-21-12.48
PID No. 25433

H:\Projects\2006\2006-0007 STA-21-12.48 Part 2\Structural-Bridge\Drawings\024_02LI248LSD004.dgn 2/12/2007 2:02:14 PM
024_02LI248LSD004.dgn

INTERIOR GIRDERS 2 & 3 DEFLECTION (INCHES)

	SPAN 1								SPAN 2							
LOCATION	RA BRG	1/8PT.	1/4PT.	3/8PT.	1/2PT.	FLD SPL	3/4PT.	7/8PT.	P 1 BRG	1/8PT.	FLD SPL	3/8PT.	1/2PT.	5/8PT.	FLD SPL	7/8PT.	P 2 BRG
DEFLECTION DUE TO WEIGHT OF DECK SLAB	0	3/8	3/4	7/8	3/4	1/2	3/8	1/8	0	1/8	1/4	5/8	3/4	5/8	3/8	1/8	0
DEFLECTION DUE TO REMAINING DEAD LOAD	0	1/8	1/8	1/8	1/8	1/8	1/8	0	0	0	1/8	1/8	1/8	1/8	1/8	0	0
ANTICIPATED CALCULATED DEAD LOAD DEFLECTION	0	1/2	7/8	1	7/8	5/8	1/2	1/8	0	1/8	3/8	3/4	7/8	3/4	1/2	1/8	0

EXTERIOR GIRDERS 1 & 4 DEFLECTION (INCHES)

	SPAN 1								SPAN 2							
LOCATION	RA BRG	1/8PT.	1/4PT.	3/8PT.	1/2PT.	FLD SPL	3/4PT.	7/8PT.	P 1 BRG	1/8PT.	FLD SPL	3/8PT.	1/2PT.	5/8PT.	FLD SPL	7/8PT.	P 2 BRG
DEFLECTION DUE TO WEIGHT OF DECK SLAB	0	3/8	5/8	5/8	5/8	3/8	1/4	1/8	0	1/8	1/4	1/2	5/8	1/2	1/4	1/8	0
DEFLECTION DUE TO REMAINING DEAD LOAD	0	1/8	1/8	1/8	1/8	1/8	1/8	0	0	0	1/8	1/8	1/8	1/8	1/8	0	0
ANTICIPATED CALCULATED DEAD LOAD DEFLECTION	0	1/2	3/4	3/4	3/4	1/2	3/8	1/8	0	1/8	3/8	5/8	3/4	5/8	3/8	1/8	0

NOTE:

1. DEFLECTIONS ARE SYMMETRICAL ABOUT ℄ PIER 2 BRG.
2. SCREED ELEVATIONS SHOWN ARE FOR THE DECK SLAB SURFACE PRIOR TO CONCRETE PLACEMENT. ALLOWANCE HAS BEEN MADE FOR ANTICIPATED CALCULATED DEAD LOAD DEFLECTIONS.

SEE SHEET 24/34 FOR SCREED LAYOUT PLAN

LEFT BRIDGE
DECK SCREED ELEVATIONS

	SPAN 1								SPAN 2							
LOCATION	RA BRG	1/8PT.	1/4PT.	3/8PT.	1/2PT.	FLD SPL	3/4PT.	7/8PT.	P 1 BRG	1/8PT.	FLD SPL	3/8PT.	1/2PT.	5/8PT.	FLD SPL	7/8PT.	P 2 BRG
LEFT CURB LINE	958.78	959.34	959.88	960.40	960.92	961.58	961.93	962.42	962.93	963.59	964.23	964.93	965.59	966.23	966.89	967.48	968.12
GIRDER 1 LINE	958.83	959.39	959.93	960.45	960.97	961.63	961.97	962.47	962.98	963.64	964.27	964.98	965.64	966.27	966.93	967.53	968.17
GIRDER 2 LINE	959.31	959.87	960.42	960.95	961.46	962.12	962.47	962.95	963.46	964.12	964.76	965.47	966.13	966.77	967.43	968.01	968.65
CROWN LINE	959.55	960.11	960.66	961.19	961.70	962.36	962.71	963.19	963.70	964.36	965.00	965.71	966.37	967.01	967.67	968.25	968.89
GIRDER 3 LINE	959.63	960.19	960.74	961.27	961.78	962.44	962.79	963.27	963.78	964.44	965.08	965.79	966.45	967.09	967.75	968.33	968.97
GIRDER 4 LINE	959.79	960.35	960.89	961.41	961.93	962.59	962.94	963.44	963.94	964.60	965.24	965.94	966.60	967.24	967.90	968.49	969.13
RIGHT CURB LINE	959.81	960.37	960.91	961.43	961.95	962.60	962.95	963.45	963.96	964.62	965.25	965.96	966.62	967.25	967.91	968.51	969.15

	SPAN 3								SPAN 4							
LOCATION	P 2 BRG	1/8PT.	FLD SPL	3/8PT.	1/2PT.	5/8PT.	FLD SPL	7/8PT.	P 3 BRG	1/8PT.	1/4PT.	FLD SPL	1/2PT.	5/8PT.	3/4PT.	7/8PT.	FA BRG
LEFT CURB LINE	968.12	968.78	969.41	970.12	970.78	971.41	972.07	972.67	973.31	973.84	974.37	974.74	975.44	975.96	976.48	976.98	977.46
GIRDER 1 LINE	968.17	968.83	969.46	970.16	970.82	971.46	972.12	972.72	973.35	973.88	974.42	974.79	975.49	976.01	976.53	977.03	977.50
GIRDER 2 LINE	968.65	969.31	969.95	970.66	971.31	971.95	972.60	973.20	973.84	974.36	974.91	975.28	975.98	976.51	977.02	977.51	977.98
CROWN LINE	968.89	969.55	970.19	970.90	971.56	972.19	972.84	973.44	974.08	974.61	975.15	975.52	976.22	976.75	977.26	977.75	978.23
GIRDER 3 LINE	968.97	969.63	970.27	970.98	971.64	972.27	972.92	973.52	974.16	974.69	975.24	975.61	976.30	976.83	977.34	977.83	978.31
GIRDER 4 LINE	969.13	969.79	970.43	971.13	971.79	972.42	973.09	973.68	974.32	974.85	975.39	975.76	976.45	976.97	977.49	977.99	978.47
RIGHT CURB LINE	969.15	969.81	970.44	971.14	971.80	972.44	973.10	973.70	974.33	974.86	975.40	975.77	976.47	976.99	977.51	978.01	978.48

RIGHT BRIDGE
DECK SCREED ELEVATIONS

	SPAN 1								SPAN 2							
LOCATION	RA BRG	1/8PT.	1/4PT.	3/8PT.	1/2PT.	FLD SPL	3/4PT.	7/8PT.	P 1 BRG	1/8PT.	FLD SPL	3/8PT.	1/2PT.	5/8PT.	FLD SPL	7/8PT.	P 2 BRG
LEFT CURB LINE	960.32	960.88	961.42	961.94	962.46	963.12	963.47	963.97	964.47	965.13	965.77	966.47	967.13	967.77	968.43	969.02	969.66
GIRDER 1 LINE	960.37	960.93	961.47	961.99	962.51	963.17	963.52	964.01	964.52	965.18	965.82	966.52	967.18	967.82	968.48	969.07	969.71
GIRDER 2 LINE	960.85	961.41	961.96	962.49	963.00	963.66	964.01	964.49	965.00	965.66	966.30	967.01	967.67	968.31	968.97	969.55	970.19
CROWN LINE	961.09	961.65	962.20	962.73	963.24	963.90	964.25	964.74	965.24	965.90	966.54	967.25	967.91	968.55	969.21	969.79	970.43
GIRDER 3 LINE	961.17	961.73	962.28	962.81	963.32	963.98	964.33	964.82	965.32	965.98	966.62	967.33	967.99	968.63	969.29	969.87	970.51
GIRDER 4 LINE	961.34	961.90	962.44	962.95	963.47	964.13	964.48	964.98	965.49	966.14	966.78	967.48	968.14	968.78	969.44	970.03	970.67
RIGHT CURB LINE	961.35	961.91	962.45	962.97	963.49	964.15	964.50	964.99	965.50	966.16	966.80	967.50	968.16	968.80	969.46	970.05	970.69

	SPAN 3								SPAN 4							
LOCATION	P 2 BRG	1/8PT.	FLD SPL	3/8PT.	1/2PT.	5/8PT.	FLD SPL	7/8PT.	P 3 BRG	1/8PT.	1/4PT.	FLD SPL	1/2PT.	5/8PT.	3/4PT.	7/8PT.	FA BRG
LEFT CURB LINE	969.66	970.32	970.96	971.66	972.32	972.95	973.62	974.21	974.85	975.38	975.92	976.29	976.99	977.50	978.02	978.52	979.00
GIRDER 1 LINE	969.71	970.37	971.00	971.71	972.36	973.00	973.66	974.26	974.90	975.43	975.96	976.33	977.03	977.55	978.07	978.57	979.05
GIRDER 2 LINE	970.19	970.85	971.50	972.20	972.86	973.49	974.14	974.74	975.38	975.91	976.46	976.83	977.52	978.05	978.56	979.05	979.53
CROWN LINE	970.43	971.09	971.74	972.44	973.10	973.74	974.39	974.98	975.62	976.15	976.70	977.07	977.77	978.29	978.80	979.29	979.77
GIRDER 3 LINE	970.51	971.17	971.82	972.52	973.18	973.82	974.47	975.06	975.70	976.23	976.78	977.15	977.85	978.38	978.88	979.37	979.85
GIRDER 4 LINE	970.67	971.33	971.97	972.67	973.33	973.97	974.63	975.22	975.86	976.39	976.93	977.30	978.00	978.52	979.03	979.53	980.01
RIGHT CURB LINE	970.69	971.35	971.98	972.69	973.34	973.98	974.64	975.24	975.88	976.40	976.94	977.31	978.01	978.53	979.05	979.55	980.03

DESIGN AGENCY
KORDA
KORDA/MENTH ENGINEERING
1650 WATERMARK DRIVE, SUITE 200
COLUMBUS, OHIO 43215-1094
ph www.korda.com
TEL (614) 487-1650
FAX (614) 487-1651

DATE 7/27/06
REVIEWED RWE
STRUCTURE FILE NUMBER 76004881/7600518R
DRAWN CAB
CHECKED JKS
DESIGNED CAB
REVISED

SCREED ELEVATIONS
BRIDGE NO.: STA-21-1248 L & R
OVER TUSCARAWAS RIVER, R.J. CORMAN R.R. AND T.R.353

STA-21-12.48
PID No. 25433

25/34
114/124

H:\Projects\2006\2006-0007 STA-21-12.48 Part 2\Structural-Bridge\Drawings\025_021_1248LSD005.dgn
2:02:09 PM
2/12/2007
025_021_1248LSD005.dgn

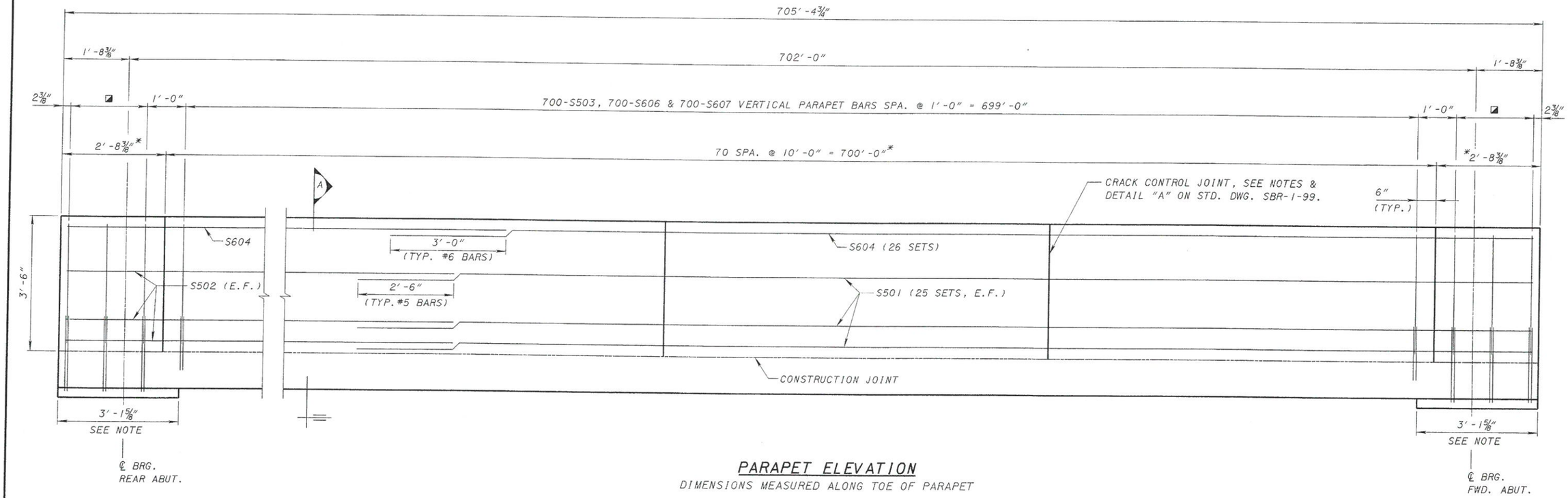

PARAPET ELEVATION

DIMENSIONS MEASURED ALONG TOE OF PARAPET

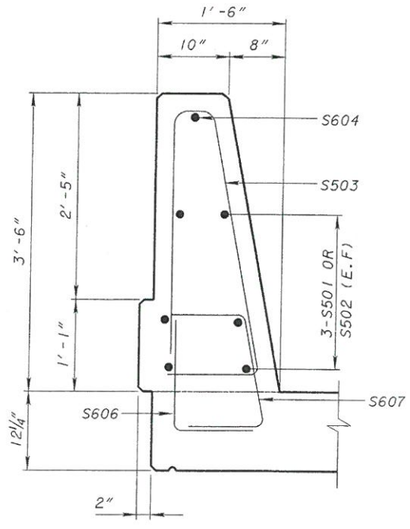

SECTION A

SLAB REINFORCING NOT SHOWN

LEGEND:

* PARAPET SAWCUT CRACK CONTROL JOINT SPACING

◪ 3-S503, 3-S608 & 3-S610 @ 1'-0" = 2'-0"

NOTE: BLOCKOUT AREA FOR MODULAR JOINT. SEE SHEET 27/34.

DESIGN AGENCY
CLAUS PILE SCHOMER BURNS & SEHAVEN, INC.
GPD ASSOCIATES
320 South Main Street, Suite 2531 Akron, Ohio 44311
330-572-2100 . Fax 330-572-2101

DESIGNED	DRAWN	REVIEWED	DATE
GTP	GTP	GGN	12-07-06
CHECKED	REVISED	STRUCTURE FILE NUMBER	
DJP		7600488L/7600518R	

SUPERSTRUCTURE PARAPET DETAIL

BRIDGE NO. STA-21-1248L&R

S.R. 21 OVER TUSCAWARAS RIVER, RJ CORMAN RR & TOWNSHIP ROAD 353

STA-21-12.48

PID No. 25433

\\Akrn01\Data\civil\2004054\00\STA\25433\bridge\STA021L1248S\sheets\025_021L1248LRA001.dgn
2/8/2007
7:46:29 AM
DPALKOVIC

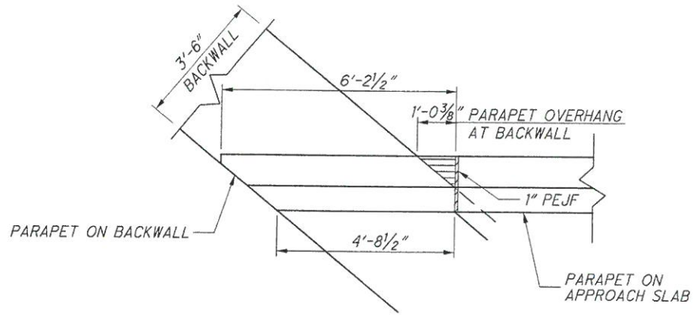

DETAIL A

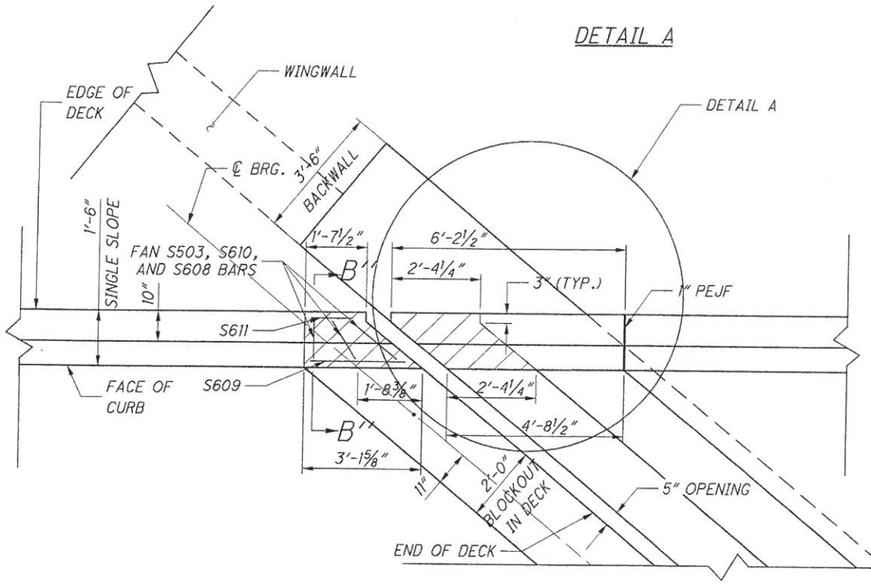

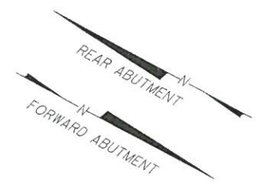

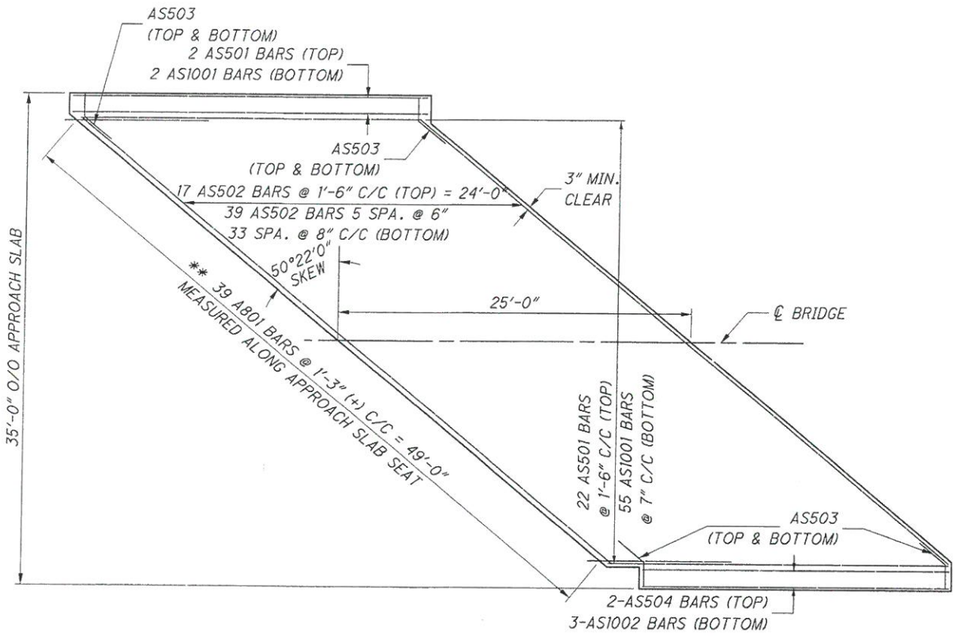

APPROACH SLAB REINFORCING PLAN
LT. BRIDGE FWD APPROACH SLAB SHOWN (N-W)
(N-E, S-W, AND S-E APPROACH SLABS SIMILAR)

** SEE SHEET 13/34 FOR FURTHER DETAILS

LEGEND:

- BLOCKOUT AREAS OF DECK AND ABUTMENT BACKWALL UNDER PARAPET
- OVERHANG AREA

NOTE:

- APPROACH SLAB PARAPETS NOT SHOWN FOR CLARITY. SEE SHEET 28/34 FOR APPROACH SLAB PARAPET DETAILS.
- FOR OTHER APPROACH SLAB DETAILS, SEE ODOT STANDARD DRAWING AS-1-81.
- TRANSVERSE SECTION OF APPROACH SLAB SHOWN ON SHEET 3A/124
- FOR REINFORCING IN PARAPET ON ABUTMENT BACKWALL BLOCKOUT AREAS, SEE SHEET 28/34

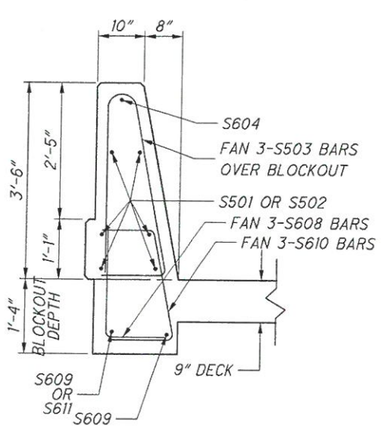

SECTION B''-B''
PARAPET OVER BLOCKOUT

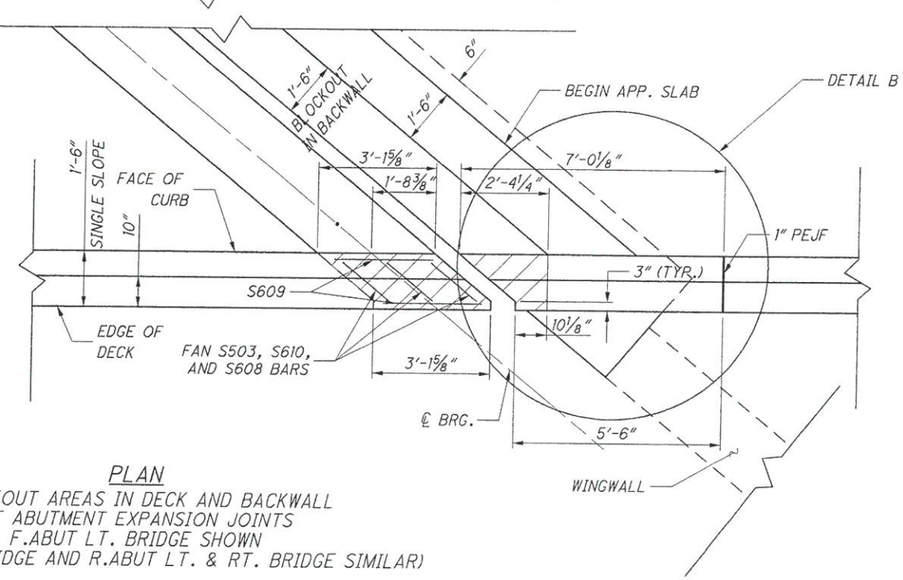

PLAN
BLOCKOUT AREAS IN DECK AND BACKWALL
AT ABUTMENT EXPANSION JOINTS
F.ABUT LT. BRIDGE SHOWN
(F.ABUT RT. BRIDGE AND R.ABUT LT. & RT. BRIDGE SIMILAR)

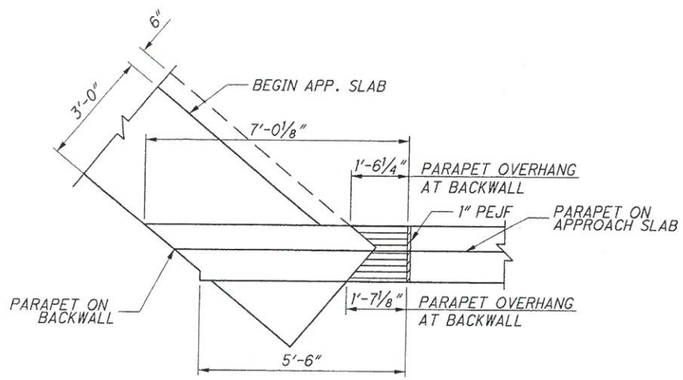

DETAIL B

DESIGN AGENCY
KORDA
KORDA/NEMETH ENGINEERING
1650 WATERMARK DRIVE, SUITE 200
COLUMBUS, OHIO 43215-1094
WEB www.korda.com
TEL (614) 487-8500
FAX (614) 487-8991

DESIGNED	DRAWN	REVIEWED	DATE
CAB	CAB	RWE	7/27/06
CHECKED	REVISED	STRUCTURE FILE NUMBER	
JKS		7600488L/7600518R	

BLOCKOUT AND APPROACH SLAB PLAN
BRIDGE NO.: STA-21-1248 L & R
OVER TUSCARAWAS RIVER, R.J. CORMAN R.R. AND T.R.353

STA-21-12.48
PID No. 25433

H:\Projects\2006\2006-0007 STA-21-12.48 Part 2\Structural-Bridge\Drawings\027_021_1248LMD001.dgn 2/12/2007 2:02:04 PM
027_021_1248LMD001.dgn

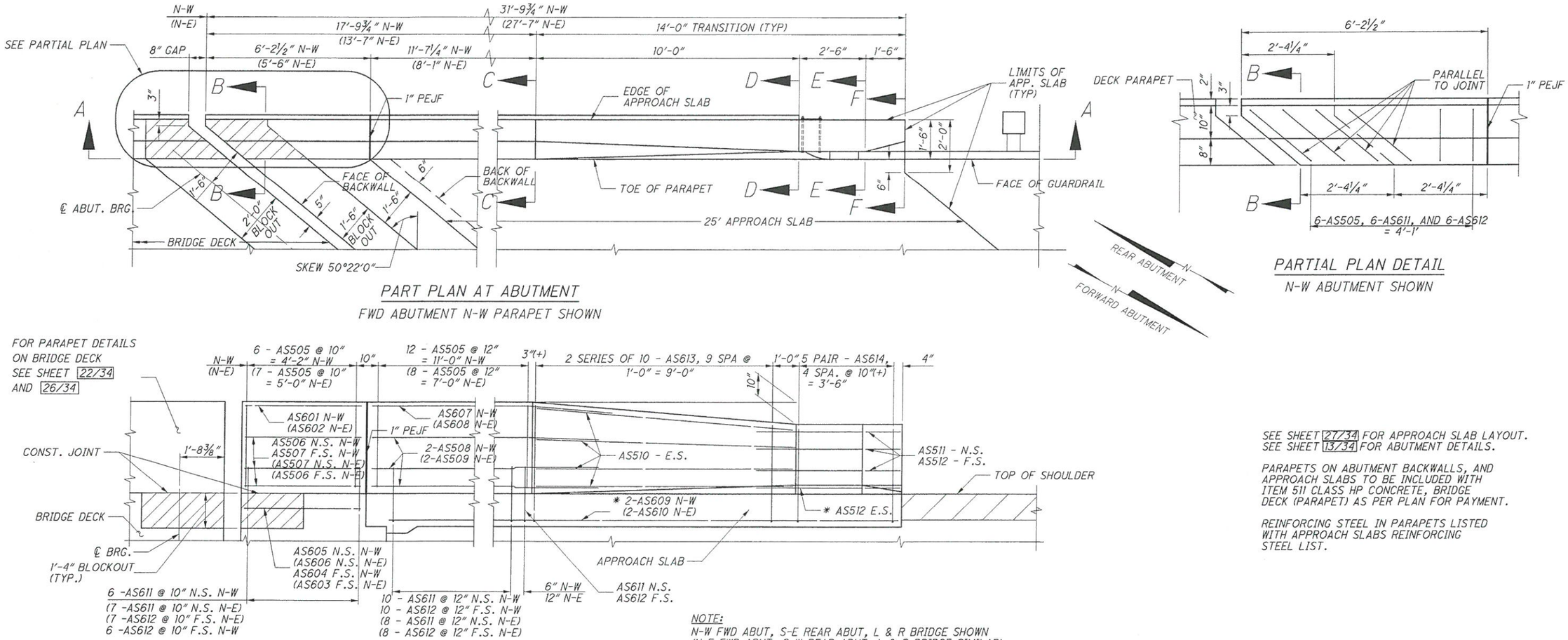

PART PLAN AT ABUTMENT

FWD ABUTMENT N-W PARAPET SHOWN

PARTIAL PLAN DETAIL

N-W ABUTMENT SHOWN

FOR PARAPET DETAILS ON BRIDGE DECK SEE SHEET 22/34 AND 26/34

NOTE:
N-W FWD ABUT, S-E REAR ABUT, L & R BRIDGE SHOWN
(N-E FWD ABUT, S-W REAR ABUT, L & R BRIDGE SIMILAR)

SECTION A-A

SEE SHEET 27/34 FOR APPROACH SLAB LAYOUT.
SEE SHEET 13/34 FOR ABUTMENT DETAILS.

PARAPETS ON ABUTMENT BACKWALLS, AND APPROACH SLABS TO BE INCLUDED WITH ITEM 511 CLASS HP CONCRETE, BRIDGE DECK (PARAPET) AS PER PLAN FOR PAYMENT.

REINFORCING STEEL IN PARAPETS LISTED WITH APPROACH SLABS REINFORCING STEEL LIST.

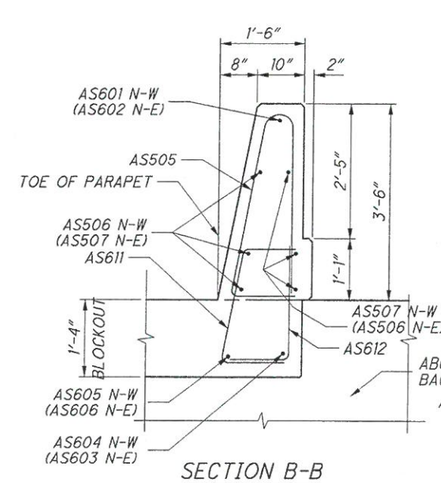

SECTION B-B

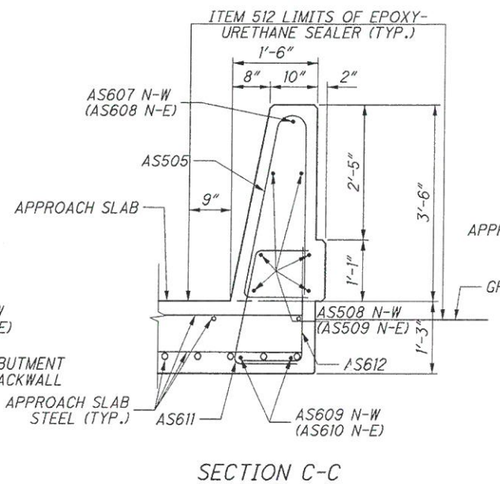

SECTION C-C

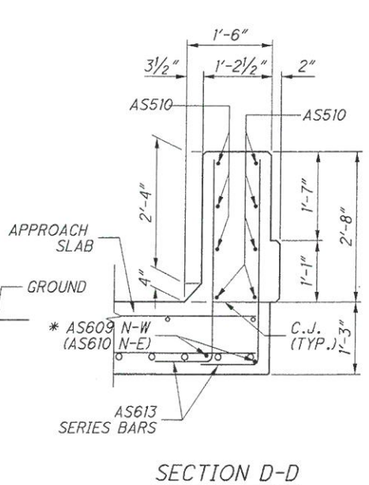

SECTION D-D

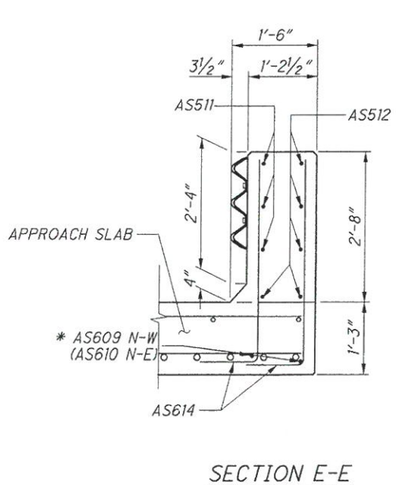

SECTION E-E

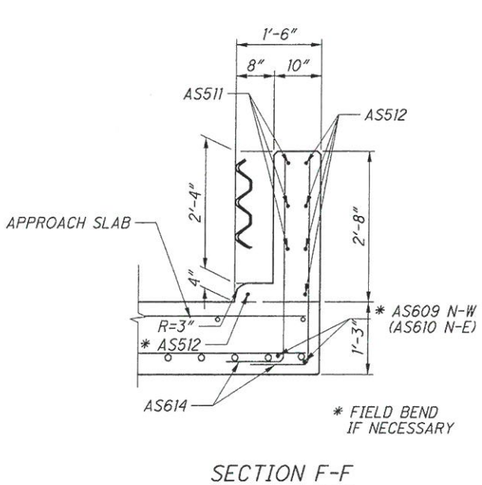

SECTION F-F

DESIGN AGENCY: KORDA/NEMETH ENGINEERING, 1650 WATERMARK DRIVE, SUITE 200, COLUMBUS, OHIO 43215-1048, TEL (614) 487-1650, FAX (614) 487-1651, WEB www.korda.com

DESIGNED JKS | DRAWN JM | REVIEWED RWE | DATE 7/27/06 | CHECKED CB | REVISED | STRUCTURE FILE NUMBER 7600488L/7600518R

ABUTMENT AND APPROACH SLAB PARAPET DETAILS

BRIDGE NO.: STA-21-1248 L & R

OVER TUSCARAWAS RIVER, RJ CORMAN RAILROAD AND T.R. 353

STA-21-1248

PID No. 25433

28 / 34

117 / 124

H:\Projects\2006\2006-0007 STA-21-12.48 Part 2\Structural-Bridge\Drawings\028_021_1248LRA002.dgn 2/12/2007 2:01:55 PM

028_021_1248LRA002.dgn

PIER BEARINGS TO BE REFURBISHED AND RESET. DETAILS PROVIDED HERE FOR PIER BEARINGS ARE PROVIDED IN THE EVENT THE BEARINGS ARE TO BE REPLACED.

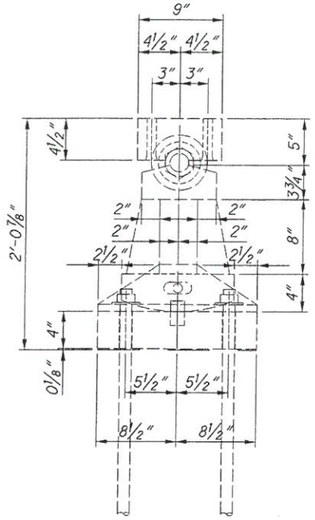

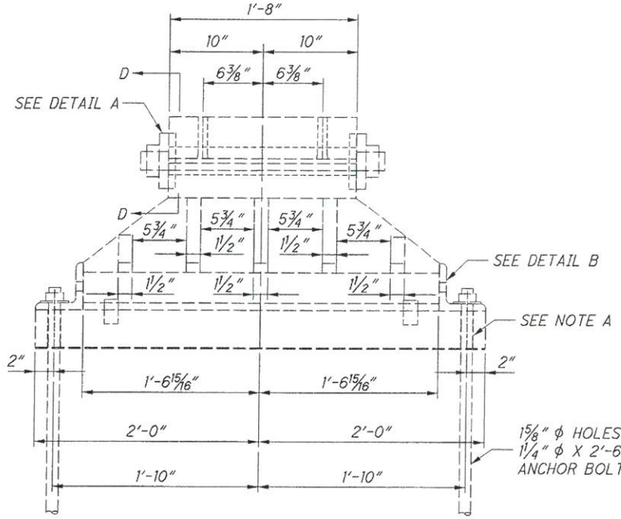

EXPANSION BEARING - PIERS 1 & 3

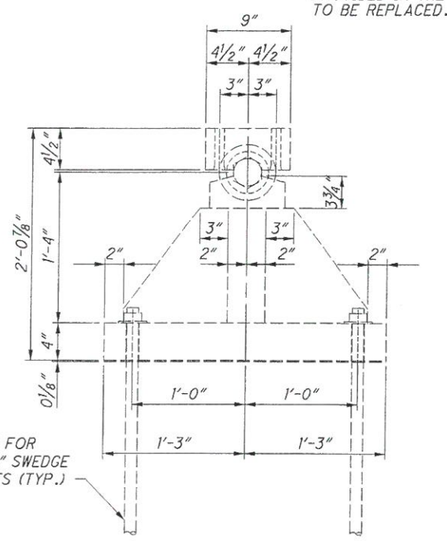

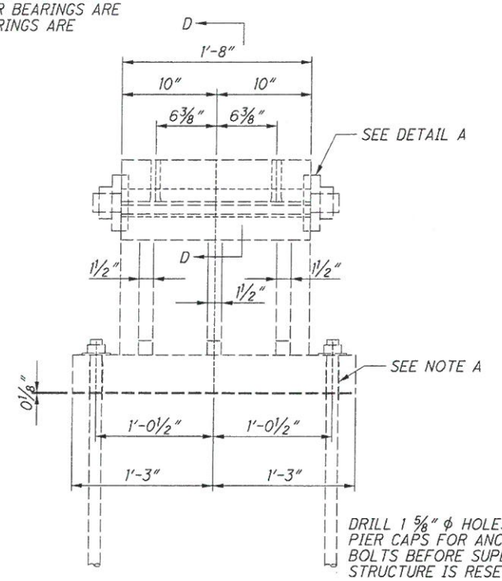

DRILL 1 5/8" ϕ HOLES IN PIER CAPS FOR ANCHOR BOLTS BEFORE SUPER-STRUCTURE IS RESET.

FIXED BEARING - PIER 2

FOR PIER ANCHOR BOLT LAYOUT PLAN SEE SHEET 15/34

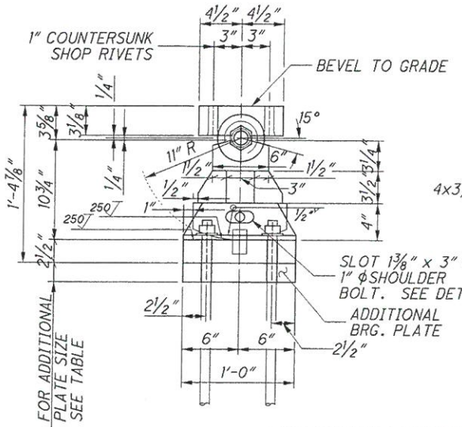

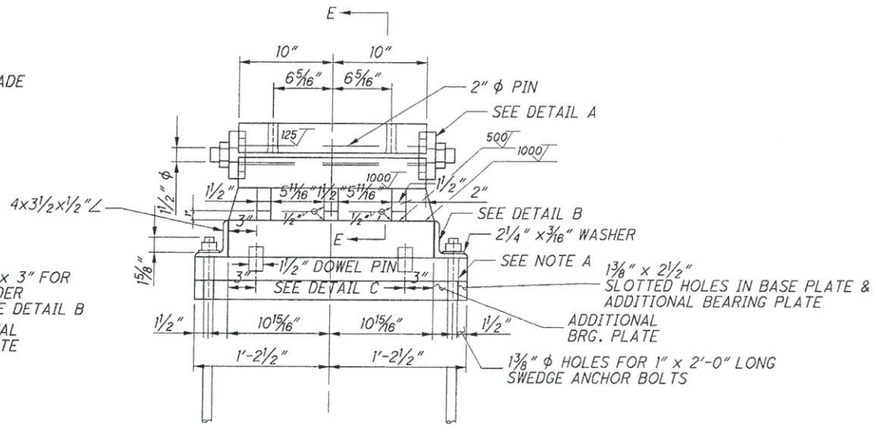

EXPANSION BEARING - ABUTMENTS

NOTE A:

FILL ANCHOR BOLT HOLES IN BASE PLATE WITH MASTIC AFTER BEARING IS PROPERLY SET AND ALL ADJUSTMENTS ARE MADE

FABRICATE NEW ABUTMENT BEARINGS AS PER DETAILS.

ABUTMENT BEARING ANCHOR BOLTS TO BE CLEANED AND REUSED FOR NEW BEARING DEVICES.

NOTES:

1. ALL MATERIAL TO BE ASTM A36 STEEL
2. BEARING SHOES SHALL BE SET VERTICAL AT 60° F

Δ ADDITIONAL ABUTMENT EXPANSION BEARING PLATE THICKNESS

	LEFT BRIDGE		RIGHT BRIDGE	
	REAR ABUTMENT	FORWARD ABUTMENT	REAR ABUTMENT	FORWARD ABUTMENT
GIRDER 1	2¾"	2⅜"	2¼"	1¾"
GIRDER 2	2⅜"	2"	2¼"	3⅛"
GIRDER 3	2"	1¾"	2"	3⅜"
GIRDER 4	1⅛"	2⅛"	1⅝"	2⅛"

Δ REQUIRED BASED ON FIELD SURVEY MEASUREMENT.

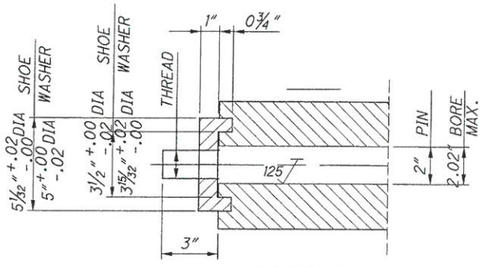

DETAIL A
DETAIL FOR 2" ϕ PIN
FOR 3" ϕ PIN ADD 1" TO ALL DIAMETERS

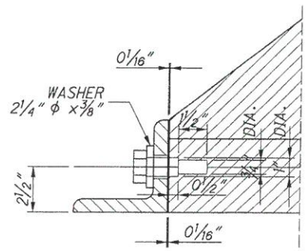

DETAIL B

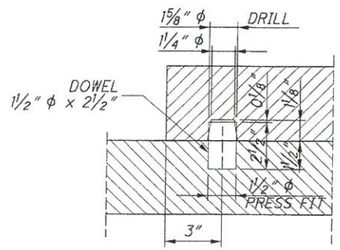

DETAIL C

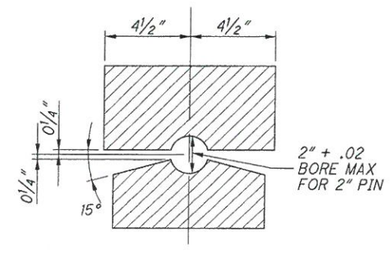

SECTION D-D
(SECTION E-E SIMILAR)

DESIGN AGENCY
KORDA
KORDA/RICHTER ENGINEERING
1650 WATERMARK DRIVE, SUITE 200
COLUMBUS, OHIO 43215-1034
PH. (614) 487-1650
FX. (614) 487-1651
www.korda.com

DESIGNED CF | DRAWN JRB | REVIEWED JKS | DATE 7/27/06
CHECKED CAB | REVISED | STRUCTURE FILE NUMBER 7600488L/7600518R

BEARING INSERT SHEET
BRIDGE NO.: STA-21-1248 L & R
OVER TUSCARAWAS RIVER, R.J. CORMAN R.R. AND T.R.353

STA-21-12.48
PID No. 25433

29/34
118/124

2/12/2007 2:01:38 PM
H:\Projects\2006\2006-0007 STA-21-12.48 Part 2\Structural-Bridge\Drawings\029_02L_I248LBR00L.dgn
029_02L_I248LBR00L.dgn

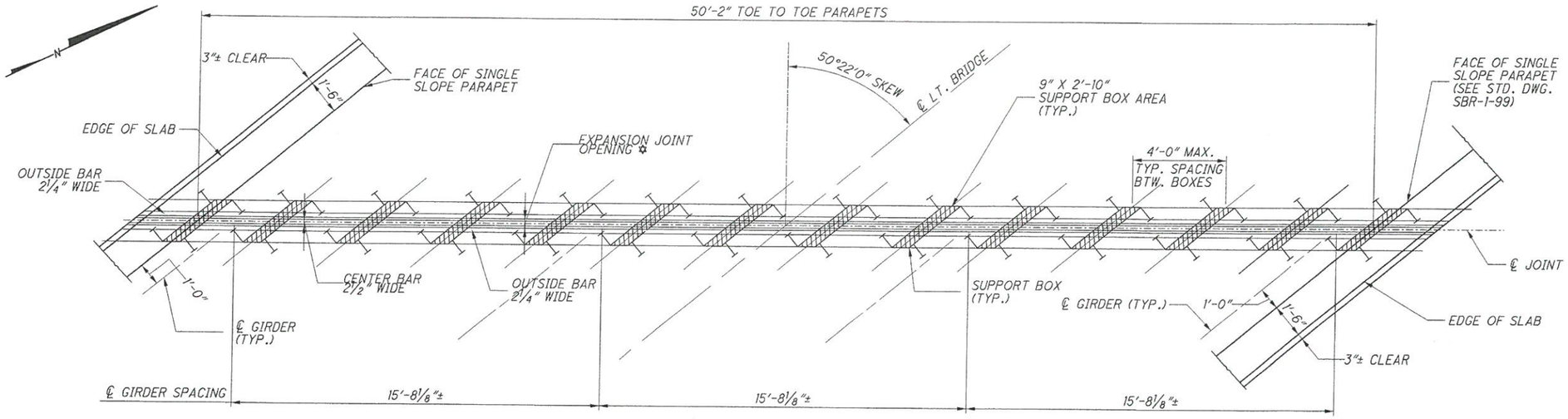

GENERAL PLAN LAYOUT (MODULAR EXPANSION JOINT)

FORWARD ABUTMENT LEFT BRIDGE SHOWN
OTHER ABUTMENTS SIMILAR
REQUIRED 4 NUMBERS

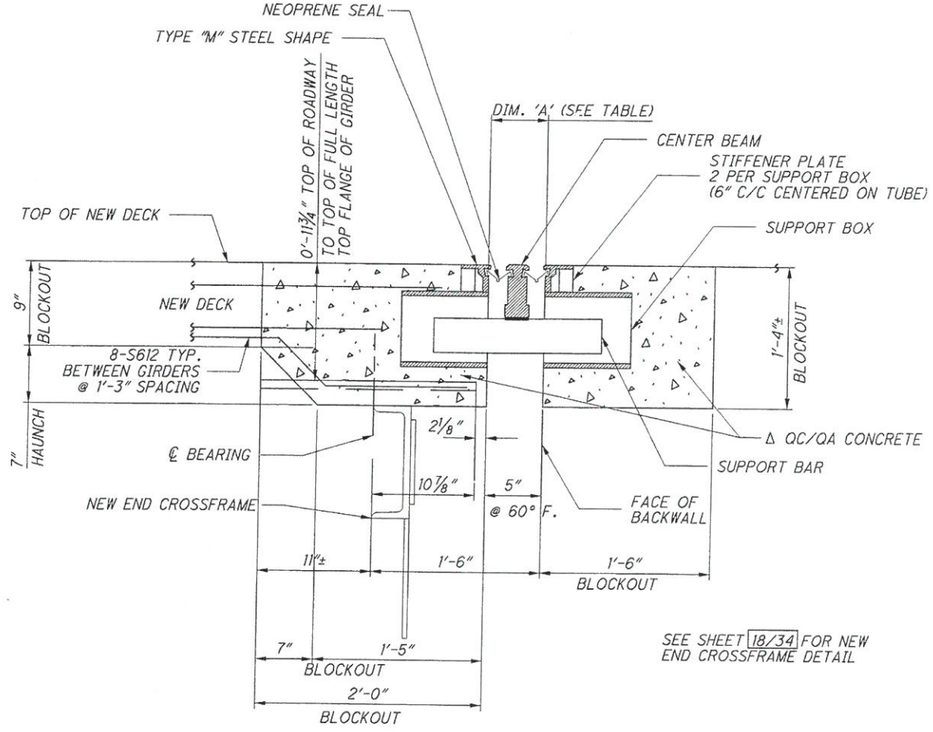

MODULAR JOINT DETAIL

NOTE:

MODULAR EXPANSION JOINT SYSTEM AND DETAILS SHALL BE PROVIDED BY THE FOLLOWING MANUFACTURERES:

WBA STM OR D-600 BY
WATSON BOWMAN-ACME CORPORATION
95 PINEVIEW DRIVE, AMHERST, NY 14225

OR

D-160 BY THE
D.S. BROWN COMPANY, INC.
NORTH BALTIMORE, OHIO 45872-0158

OR AN APPROVED EQUAL.

SEE SHEETS 6 & 7/34 FOR ADDITIONAL NOTES.

Δ THE CONCRETE IN THE BLOCKOUT AREA SHALL BE CLASS HP CONCRETE, AND INCLUDED WITH ITEM 511 CLASS HP CONCRETE, BRIDGE DECK, AS PER PLAN FOR PAYMENT.

MODULAR JOINT @ ABUTMENT JOINT SETTING TABLE		
TEMP (°F)	JOINT OPENING - DIM 'A' REAR AND FORWARD ABUTMENTS	
	WATSON BOWMAN STM OR D-600 JOINT	D.S. BROWN D-160 JOINT
30	4 9/16"	5 5/16"
40	4 3/8"	5 3/8"
50	4 3/16"	5 3/16"
60	4"	5"
70	3 13/16"	4 13/16"
80	3 5/8"	4 5/8"
90	3 7/16"	4 7/16"

NOTES:

1. THE CONTRACTOR SHALL VERIFY ALL DIMENSIONS TO INSURE ACCURACY PRIOR TO FABRICAITON OF EXPANSION JOINT, AS PER THE CONTRACT PLANS.

2. ALL FABRICATION AND MATERIAL SHALL BE IN ACCORDANCE WITH JANUARY 1, 2005 EDITION OF THE OHIO DOT CMS FOR ROAD AND BRIDGE CONSTRUCTION, AND ALL ADDITIONAL SPECIFICATIONS EXCEPT AS NOTED HEREIN.

3. ALL WELDING SHALL BE IN ACCORDANCE WITH ANSI /AASHTO/AWS BRIDGE WELDING CODE D1.5-95. AS MODIFIED BY SUPPLEMENT NO. 1011 DATED 07/30/2004 TO THE CMS SPECIFICATIONS.

4. ALL PERMANENT METAL COMPONENTS (EXCEPT STAINLESS STEEL) SHALL BE GALVANIZED IN ACCORDANCE WITH ASTM A-123.

5. THE NEOPRENE SEAL SHALL BE SHOP INSTALLED BY THE MANUFACTURER USING PRIM-LUB ADHESIVE AND SEAL INSTALLATION TOOLS. THE PRIMA-LUB SHALL BE APPLIED TO THE FULL PERIMETER OF THE EXTRUSION CAVITY. FACTORY SPLICS WILL BE PERMITTED. FIELD SPLICES WILL NOT BE PERMITTED.

6. THE EXPANSION JOINT SHALL BE PRESET BY THE MANUFACTURER PRIOR TO SHIPPING TO THE DIMENSION SHOWN AT 60°F. FINAL ADJUSTMENT SHALL BE MADE ACCORDING TO DIM 'A' TEMP. ADJUSTMENT CHART, IN THE FIELD, BEFORE FINAL CONCRETE PLACEMENT.

7. THE STEEL SHALL CONFORM TO ASTM A709 GRADE 50 OR 50W. ANCHOR BARS SHALL BE ASTM A36.

8. IN-HOUSE STATE SHOP INSPECTION IS NOT REQUIRED.

9. THE SHOP SHALL COAT THE TEMPORARY DEVICES WITH A SHOP COAT OF CLEAR LACQUER SPRAY PAINT FOR PROTECTION AGAINST CORROSION. THE SHOP SHALL TOUCH UP ANY DAMAGED GALVANIZED AREAS WITH A SHOP COAT OF RUSTOLEUM GALVANIZED SPARY PAINT PRIOR TO SHIPPING.

DESIGN AGENCY
KORDA
KORDA/RICHARD ENGINEERING
WEB www.korda.com
E-MAIL info@korda.com
COLUMBUS, OHIO 43215-5934
FAX (614) 487-8990

DESIGNED	DRAWN	REVIEWED	DATE
JKS	JM	RWE	7/27/06
CHECKED	REVISED	STRUCTURE FILE NUMBER	
CAB		7600488L/7600518R	

MODULAR EXPANSION JOINT LAYOUT
BRIDGE NO.: STA-21-1248 L & R
OVER TUSCARAWAS RIVER, R.J. CORMAN R.R. AND T.R.353

STA-21-12.48
PID No. 25433

30/34

119/124

2/12/2007 2:01:31 PM
H:\Projects\2006\2006-0007 STA-21-12.48 Part 2\Structural-Bridge\Drawings\030_021_1248LEX001.dgn
030_021_1248LEX001.dgn

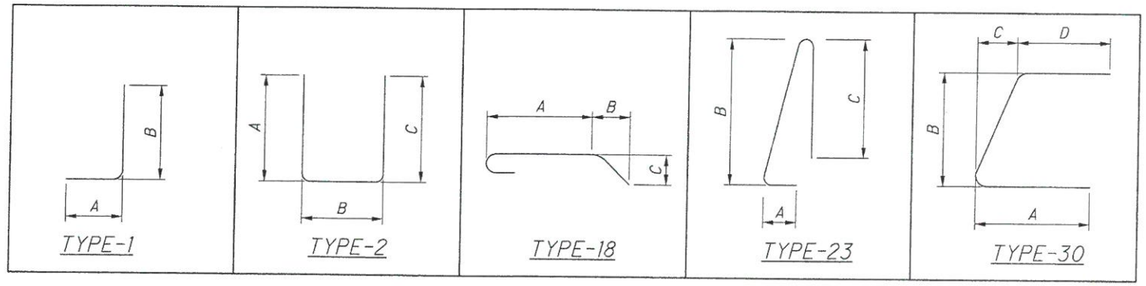

MARK	NUMBER					LENGTH	WEIGHT LB	WEIGHT RB	TYPE	DIMENSIONS						
	LBREAR	LBFWD	RBREAR	RBFWD	TOTAL					A	B	C	D	E	R	INC
ABUTMENTS																
A601	60	60	60	60	240	9'- 6"	1712	1712	2	4'-4"	1'-2"	4'-4"				
A602	60	60	60	60	240	20'- 8"	3725	3725	2	8'-11"	3'-2"	8'-11"				
A603	38	38	38	38	152	31'-4"	3577	3577	STR							
A604	215	220	218	219	872	4'- 6"	2940	2954	STR							
A801	39	39	39	39	156	6'- 3"	1302	1302	18	4'-1"	1'-0"	1'-0"				
						TOTAL	13,256	13,270	POUNDS							

LEGEND

LB = LEFT BRIDGE

RB = RIGHT BRIDGE

REAR = REAR ABUTMENT

FWD = FORWARD ABUTMENT

NOTES:

1. ALL BARS SHALL BE EPOXY COATED.
2. LENGTHS ARE RECORDED IN FEET - INCHES.
3. "STR." IN THE TYPE COLUMN INDICATES STRAIGHT BARS.
4. REFER TO C.M.S. SEC. 509.05 FOR STANDARD BEND DIMENSIONS.
5. ALL DIMENSIONS ARE OUT-TO-OUT.

THE BAR SIZE NUMBER IS SPECIFIED ON THE PLANS IN THE BAR MARK COLUMN. THE FIRST DIGIT WHERE THREE DIGITS ARE USED, AND THE FIRST TWO DIGITS WHERE FOUR ARE USED, INDICATES THE BAR SIZE NUMBER. FOR EXAMPLE, P601 IS A NO. 6 BAR. BAR DIMENSIONS SHOWN ARE OUT TO OUT UNLESS OTHERWISE INDICATED. R INDICATES INSIDE RADIUS, UNLESS OTHERWISE NOTED. "STD." WRITTEN IN PLACE OF A DIMENSION INDICATES A STANDARD BEND AT THE END OF THE BAR.

DESIGN AGENCY
KORDA
KORDA/NEMETH ENGINEERING
1650 WATERMARK DRIVE, SUITE 200
COLUMBUS, OHIO 43215
WEB www.korda.com
TEL (614) 487-9500

DESIGNED	DRAWN	REVIEWED	DATE
CAB	CAB	RWE	2/02/07
CHECKED	REVISED	STRUCTURE FILE NUMBER	
JKS		7600488L/7600518R	

REINFORCING STEEL LIST
BRIDGE NO.: STA-21-1248 L & R
OVER TUSCARAWAS RIVER, R.J. CORMAN R.R. AND T.R.353

STA-21-12.48
PID No. 25433

H:\Projects\2006\2006-0007 STA-21-12.48 Part 2\Structural-Bridge\Drawings\031_021_1248LRL001.dgn 2/12/2007 2:01:26 PM
031_021_1248LRL001.dgn

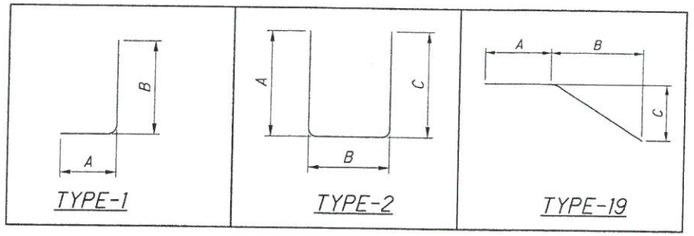

MARK	NUMBER							LENGTH	WEIGHT LB	WEIGHT RB	TYPE	DIMENSIONS						
	LBP1	LBP2	LBP3	RBP1	RBP2	RBP3	TOTAL					A	B	C	D	E	R	INC
PIER CAPS																		
	4 SR	4 SR	4 SR	4 SR	4 SR	4 SR	24 SR	12′-4″				4′-9″		4′-9″				
P501	OF	OF	OF	OF	OF	OF	OF	TO	992	992	2	TO	3′-1½″	TO				0′-2″
	6	6	6	6	6	6	6	14′-1″				5′-7″		5′-7″				
	4 SR	4 SR	4 SR	4 SR	4 SR	4 SR	24 SR	14′-4″				5′-9″		5′-9″				
P502	OF	OF	OF	OF	OF	OF	OF	TO	960	960	2	TO	3′-1½″	TO				0′-3″
	5	5	5	5	5	5	5	16′-4″				6′-9″		6′-9″				
	4 SR	4 SR	4 SR	4 SR	4 SR	4 SR	24 SR	16′-10″				7′-0″		7′-0″				
P503	OF	OF	OF	OF	OF	OF	OF	TO	1137	1137	2	TO	3′-1½″	TO				0′-4″
	5	5	5	5	5	5	5	19′-6″				8′-4″		8′-4″				
	4 SR	4 SR	4 SR	4 SR	4 SR	4 SR	24 SR	17′-4″				7′-3″		7′-3″				
P504	OF	OF	OF	OF	OF	OF	OF	TO	1147	1147	2	TO	3′-1½″	TO				0′-3″
	5	5	5	5	5	5	5	19′-4″				8′-3″		8′-3″				
	4 SR	4 SR	4 SR	4 SR	4 SR	4 SR	24 SR	15′-3″				6′-2″		6′-2″				
P505	OF	OF	OF	OF	OF	OF	OF	TO	1017	1017	2	TO	3′-1½″	TO				0′-3″
	5	5	5	5	5	5	5	17′-3″				7′-2″		7′-2″				
	4 SR	4 SR	4 SR	4 SR	4 SR	4 SR	24 SR	13′-4″				5′-3″		5′-3″				
P506	OF	OF	OF	OF	OF	OF	OF	TO	1067	1067	2	TO	3′-1½″	TO				0′-2″
	6	6	6	6	6	6	6	15′-1″				6′-1″		6′-1″				
P507	8	8	8	8	8	8	48	19′- 10″	496	496	19	7′-0″	11′-8″	5′-8″				
P601	19	19	19	19	19	19	114	27′- 2″	2326	2326	2	11′-5″	4′-8″	11′-5″				
	2 SR	2 SR	2 SR	2 SR	2 SR	2 SR	12 SR	37′- 10″				16′-9″		16′-9″				
P602	OF	OF	OF	OF	OF	OF	OF	TO	1580	1580	2	TO	4′-8″	TO				2′-0″
	4	4	4	4	4	4	4	49′- 10″				22′-9″		22′-9″				
	2 SR	2 SR	2 SR	2 SR	2 SR	2 SR	12 SR	53′- 10″				24′-9″		24′-9″				
P603	OF	OF	OF	OF	OF	OF	OF	TO	1518	1519	2	TO	4′-8″	TO				1′-2″
	3	3	3	3	3	3	3	58′- 6″				27′-1″		27′-1″				
P604	19	19	19	19	19	19	114	60′- 4″	5166	5165	2	28′-0″	4′-8″	28′-0″				
P701	58	58	58	58	58	58	348	3′- 0″	1067	1067	STR							
P702	28	28	28	28	28	28	168	9′- 0″	1545	1546	STR							
P1001	12	12	12	12	12	12	72	29′-2″	4518	4518	1	24′-3″ □	5′-3″					
P1002	12	12	12	12	12	12	72	31′-10″	4931	4931	1	27′-3″ □	4′-11″					
P1003	12	12	12	12	12	12	72	29′-10″	4621	4621	1	24′-3″ □	5′-11″					
P1004	12	12	12	12	12	12	72	33′-2″	5138	5138	1	27′-3″ □	6′-3″					
								TOTAL	39,226	39,227	POUNDS							

LEGEND

LB = LEFT BRIDGE
RB = RIGHT BRIDGE

NOTES:

1. ALL BARS SHALL BE EPOXY COATED.
2. LENGTHS ARE RECORDED IN FEET - INCHES.
3. "STR." IN THE TYPE COLUMN INDICATES STRAIGHT BARS.
4. REFER TO C.M.S. SEC. 509.05 FOR STANDARD BEND DIMENSIONS.
5. ALL DIMENSIONS ARE OUT-TO-OUT.

THE BAR SIZE NUMBER IS SPECIFIED ON THE PLANS IN THE BAR MARK COLUMN. THE FIRST DIGIT WHERE THREE DIGITS ARE USED, AND THE FIRST TWO DIGITS WHERE FOUR ARE USED, INDICATES THE BAR SIZE NUMBER. FOR EXAMPLE, P601 IS A NO. 6 BAR. BAR DIMENSIONS SHOWN ARE OUT TO OUT UNLESS OTHERWISE INDICATED. R INDICATES INSIDE RADIUS, UNLESS OTHERWISE NOTED. "STD." WRITTEN IN PLACE OF A DIMENSION INDICATES A STANDARD BEND AT THE END OF THE BAR.

□ THE LENGTHS OF THE BARS DESIGNATED FOR MECHANICAL CONNECTORS ARE THE NOMINAL LENGTHS MEASURED TO THE CENTER OF THE SPLICE. ADJUSTMENT IN THE LENGTHS OF BARS DUE TO MECHANICAL SPLICING SHALL BE MADE PRIOR TO THE FABRICATION.

DESIGN AGENCY
KORDA
KORDA/RICHARD ENGINEERING
#18 www.korda.com
DESIGNED CAB
DRAWN CAB
CHECKED JKS
REVISED
REVIEWED RWE
DATE 2/02/07
STRUCTURE FILE NUMBER 7600488J/7600518R

REINFORCING STEEL LIST
BRIDGE NO.: STA-21-1248 L & R
OVER TUSCARAWAS RIVER, R.J. CORMAN R.R. AND T.R.353

STA-21-12.48
PID No. 25433

32/34
121/124

H:\Projects\2006\2006-0007 STA-21-12.48 Part 2\Structural-Bridge\Drawings\032_02L_I248LRL002.dgn 2/12/2007 2:01:23 PM
032_02L_I248LRL002.dgn

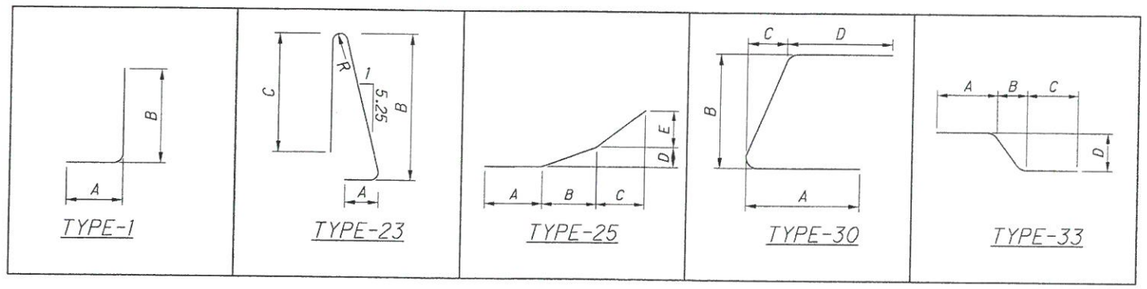

MARK	NUMBER			LENGTH	WEIGHT LEFT	WEIGHT RIGHT	TYPE	DIMENSIONS						
	LEFT	RIGHT	TOTAL					A	B	C	D	E	R	INC
SUPERSTRUCTURE														
S401	1368	1368	2736	30'- 0"	27414	27415	STR							
S402	57	57	114	32'- 10"	1250	1250	STR							
S501	1550	1550	3100	30'- 0"	48500	48499	STR							
S502	62	62	124	17'- 7"	1137	1137	STR							
S503	1412	1412	2824	7'-5"	10922	10923	23	1'-1"	3'-2"	3'-0"			0'-2¾"	
S601	2626	2626	5252	34'- 6"	136077	136076	STR							
	4 SR	4 SR	8 SR	4'- 0"										
S602	OF	OF	OF	TO	8540	8540	STR							0'-5"
	74	74	74	34'- 5"										
S603	40	40	80	3'- 6"	210	211	STR							
S604	388	388	776	30'- 0"	17484	17483	STR							
S605	168	168	336	26'- 8"	6729	6729	STR							
S606	1400	1400	2800	2'- 7"	5432	5432	1	1'-1"	1'-8"					
S607	1400	1400	2800	3'-6"	7360	7360	30	1'-1"	1'-8"	0'-4"	1'-1"			
S608	12	12	24	2'- 11"	52	53	1	1'-1"	2'-0"					
S609	6	6	12	2'- 9"	25	25	STR							
S610	12	12	24	3'-11"	71	70	30	1'-1"	2'-0"	0'-5"	1'-1"			
S611	2	2	4	1'- 3"	4	4	STR							
S612	48	48	96	5'-10"	421	421	33	4'-0"	0'-5"	1'-3"	0'-5"			
				TOTAL	271,628	271,628	POUNDS							

NOTES:

1. ALL BARS SHALL BE EPOXY COATED.
2. LENGTHS ARE RECORDED IN FEET - INCHES.
3. "STR." IN THE TYPE COLUMN INDICATES STRAIGHT BARS.
4. REFER TO C.M.S. SEC. 509.05 FOR STANDARD BEND DIMENSIONS.
5. ALL DIMENSIONS ARE OUT-TO-OUT.

THE BAR SIZE NUMBER IS SPECIFIED ON THE PLANS IN THE BAR MARK COLUMN. THE FIRST DIGIT WHERE THREE DIGITS ARE USED, AND THE FIRST TWO DIGITS WHERE FOUR ARE USED, INDICATES THE BAR SIZE NUMBER. FOR EXAMPLE, P601 IS A NO. 6 BAR. BAR DIMENSIONS SHOWN ARE OUT TO OUT UNLESS OTHERWISE INDICATED. R INDICATES INSIDE RADIUS, UNLESS OTHERWISE NOTED. "STD." WRITTEN IN PLACE OF A DIMENSION INDICATES A STANDARD BEND AT THE END OF THE BAR.

DESIGN AGENCY
KORDA
KORDA/NEMETH ENGINEERING
1650 WATERMARK DRIVE, SUITE 200
COLUMBUS, OHIO 43215-1094
WEB www.korda.com
TEL (614) 487-9650
FAX (614) 487-9651

DESIGNED	DRAWN	REVIEWED	DATE
CAB	CAB	RWE	2/02/07
CHECKED	REVISED	STRUCTURE FILE NUMBER	
JKS		7600488L/7600518R	

REINFORCING STEEL LIST
BRIDGE NO.: STA-21-1248 L & R
OVER TUSCARAWAS RIVER, R.J. CORMAN R.R. AND T.R.353

STA-21-12.48
PID No. 25433

H:\Projects\2006\2006-0007 STA-21-12.48 Part 2\Structural-Bridge\Drawings\033_021_1248LRL003.dgn 2/12/2007 2:01:19 PM
033_021_1248LRL003.dgn

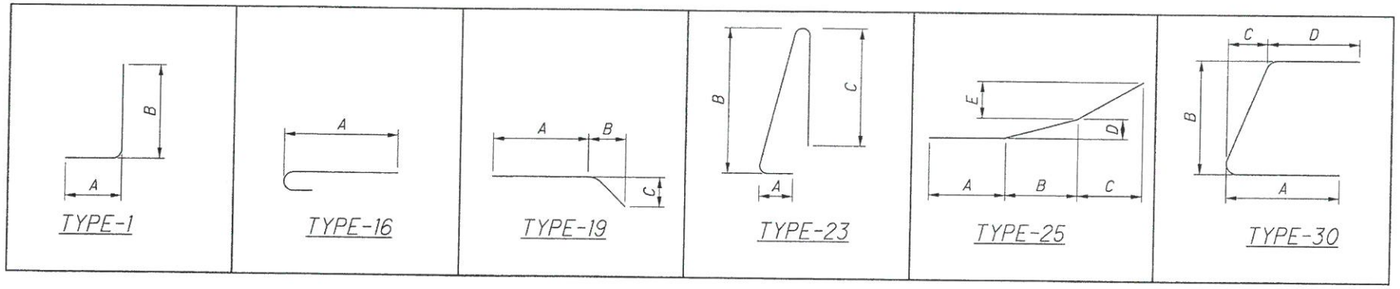

MARK	NUMBER					LENGTH	WEIGHT	TYPE	DIMENSIONS						
	LBRA	LBFA	RBRA	RBFA	TOTAL				A	B	C	D	E	R	INC
APPROACH SLABS															
AS501	24	24	24	24	96	24'- 6"	2453 △	STR							
AS502	56	56	56	56	224	49'- 4"	11526 △	STR							
AS503	8	8	8	8	32	3'- 8"	122 △	19	1'-3"	1'-7"	1'-11"				
AS504	2	2	2	2	8	21'- 7"	180 △	STR							
AS505	33	33	33	33	132	7'-5"	1021 *	23	1'-1"	3'-2"	3'-0"			0'-2¾"	
AS506	6	6	6	6	24	5'- 0"	125 *	STR							
AS507	6	6	6	6	24	5'- 10"	146 *	STR							
AS508	6	6	6	6	24	14'- 1"	353 *	STR							
AS509	6	6	6	6	24	10'- 7"	265 *	STR							
AS510	16	16	16	16	64	10'- 0"	668 *	STR							
AS511	6	6	6	6	24	5'- 7"	140 *	25	1'-8"	2'-5"	1'-5"	0'-1 ½"	0'-5"		
AS512	10	10	10	10	40	5'- 6"	229 *	STR							
AS601	1	1	1	1	4	5'- 7"	34 *	STR							
AS602	1	1	1	1	4	5'- 4"	32 *	STR							
AS603	1	1	1	1	4	5'- 2"	31 *	STR							
AS604	1	1	1	1	4	5'- 10"	35 *	STR							
AS605	1	1	1	1	4	4'- 4"	26 *	STR							
AS606	1	1	1	1	4	6'- 8"	40 *	STR							
AS607	1	1	1	1	4	14'- 3"	86 *	STR							
AS608	1	1	1	1	4	10'- 9"	65 *	STR							
AS609	2	2	2	2	8	25'- 3"	303 *	STR							
AS610	2	2	2	2	8	21'- 9"	261 *	STR							
AS611	33	33	33	33	132	3'- 11"	777 *	30	1'-1"	2'-0"	0'-5"	1'-1"			
AS612	33	33	33	33	132	2'- 11"	578 *	1	1'-1"	2'-0"					
	4 SR	4 SR	4 SR	4 SR	16 SR	4'- 7"				3'-8"					
AS613	OF	OF	OF	OF	OF	TO	1192 *	1	1'-1"	TO					0'-1"
	10	10	10	10	10	5'- 4"				4'-5"					
AS614	20	20	20	20	80	4'- 6"	541 *	1	1'-1"	3'-7"					
AS1001	57	57	57	57	228	25'- 11"	25426 △	16	24'-6"						
AS1002	3	3	3	3	12	23'- 0"	1188 △	16	21'-7"						
						TOTAL	40,895△	POUNDS							
						TOTAL	6948 *	POUNDS							

NOTES:

1. ALL BARS SHALL BE EPOXY COATED.
2. LENGTHS ARE RECORDED IN FEET - INCHES.
3. "STR." IN THE TYPE COLUMN INDICATES STRAIGHT BARS.
4. REFER TO C.M.S. SEC. 509.05 FOR STANDARD BEND DIMENSIONS.
5. ALL DIMENSIONS ARE OUT-TO-OUT.

△ 6. TO BE INCLUDED WITH ITEM 526 REINFORCED CONCRETE APPROACH SLABS (T = 15"), AS PER PLAN FOR PAYMENT.

* 7. TO BE INCLUDED WITH ITEM 509 EPOXY COATED REINFORCING STEEL FOR PAYMENT.

THE BAR SIZE NUMBER IS SPECIFIED ON THE PLANS IN THE BAR MARK COLUMN. THE FIRST DIGIT WHERE THREE DIGITS ARE USED, AND THE FIRST TWO DIGITS WHERE FOUR ARE USED, INDICATES THE BAR SIZE NUMBER. FOR EXAMPLE, P601 IS A NO. 6 BAR. BAR DIMENSIONS SHOWN ARE OUT TO OUT UNLESS OTHERWISE INDICATED. R INDICATES INSIDE RADIUS, UNLESS OTHERWISE NOTED. "STD." WRITTEN IN PLACE OF A DIMENSION INDICATES A STANDARD BEND AT THE END OF THE BAR.

DESIGN AGENCY
KORDA
KORDA/RAMETHEENGINEERING
8123 www.korda.com
TEL (614) 487-1650
FAX (614) 487-1651

DESIGNED CAB | DRAWN CAB | REVIEWED RWE | DATE 2/02/07
CHECKED JKS | REVISED | STRUCTURE FILE NUMBER 7600488L/7600518R

REINFORCING STEEL LIST
BRIDGE NO.: STA-21-1248 L & R
OVER TUSCARAWAS RIVER, R.J. CORMAN R.R. AND T.R.353

STA-21-12.48
PID No. 25433

34/34

123/124

H:\Projects\2006\2006-0007 STA-21-12.48 Part 2\Structural-Bridge\Drawings\034_021_I248LRL004.dgn
2/12/2007 2:01:14 PM
034_021_I248LRL004.dgn

STA-21-12.48
CONGRESS LANDS
SECTION 6, TOWN 10, RANGE 9
PERRY TOWNSHIP
STARK COUNTY

(1) CURVE DATA
RADIUS: 2815'
DELTA: 3°58'16"
ARC LENGTH: 195.10'
CHORD BEARING: S 12°07'21" W
CHORD LENGTH: 195.06'

(2) CURVE DATA
RADIUS: 2915'
DELTA: 1°21'27"
ARC LENGTH: 69.06'
CHORD BEARING: N 13°25'46" E
CHORD LENGTH: 69.06'

BASIS FOR BEARINGS:

ALL BEARINGS SHOWN ARE FOR PROJECT USE ONLY.

NOTES:
THE EXISTING HIGHWAY RIGHT-OF-WAY AND RAILROAD PROPERTY LINE LOCATIONS WERE DETERMINED USING RAILROAD TRACK MAPS AND STA-21-12.39 RIGHT-OF-WAY PLANS.

PROJECT COORDINATES AND ELEVATIONS ARE BASED UPON U.S.G.S. STATE PLANE DATUM NAD83(86) AND NAVD88, OHIO NORTH ZONE (3401).

NORFOLK SOUTHERN RAILWAY CO. VALUATION MAPS ARE NORFOLK SOUTHERN RECORD NUMBER 2431001, AND VS 2OHIOMAP1.
R.J. CORMAN RAILROAD CO. VALUATION MAP IS V122.4-NO.30.

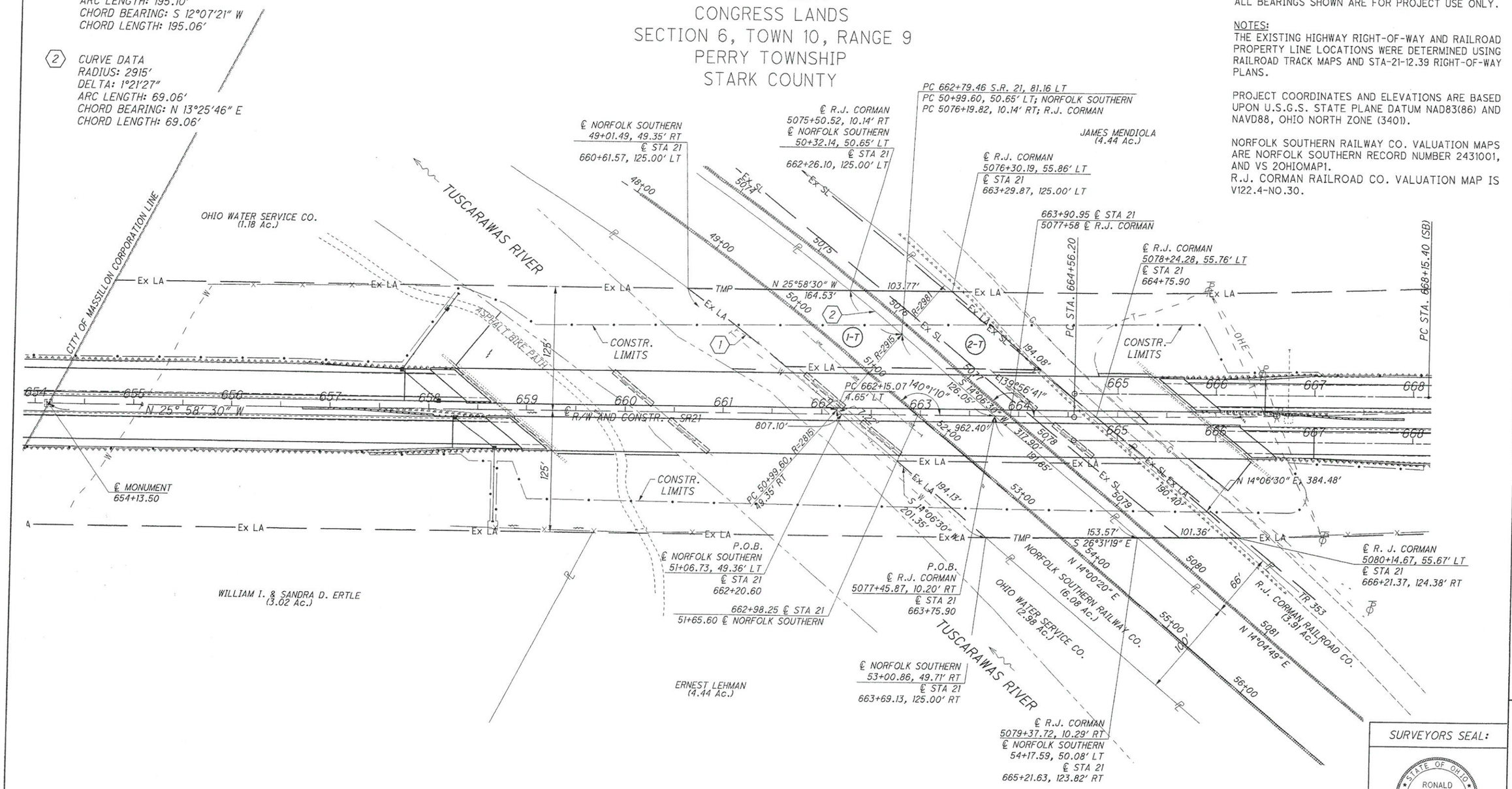

TOTAL NUMBER OF:	NOTE:
2 OWNERSHIPS	ALL TEMPORARY PARCELS
2 PARCELS	TO BE OF 18 MONTH DURATION.
0 TOTAL TAKES	
0 OWNERSHIPS WITH STRUCTURES INVOLVED	
0 OWNERSHIPS WITH "P" ITEMS	

SUMMARY OF ADDITIONAL R/W REQUIRED

NET RESIDUE = RECORD AREA-TOTAL P.R.O.-NET TAKE
ALL AREAS IN ACRES UNLESS OTHERWISE NOTED

PARCEL	OWNER	OWNERS RECORD INSTRUMENT NO.	AUDITOR'S PARCEL	RECORD AREA	TOTAL P.R.O.	GROSS TAKE	PRO IN TAKE	NET TAKE	STRUCTURE	NET RESIDUE LEFT	NET RESIDUE RIGHT	TYPE FUND	REMARKS & PERSONALITY	AS ACQUIRED BOOK	AS ACQUIRED PAGE
1-T	NORFOLK SOUTHERN RAILWAY CO.	200004270023986	4799006	6.08 Ac.		0.898	0.000	0.898	NO			STATE	WORK AREA FOR BRIDGE CONSTRUCTION		
2-T	R.J. CORMAN RAILROAD CO.	199503240011737	4799001	3.91 Ac.		0.584	0.000	0.584	NO			STATE	WORK AREA FOR BRIDGE CONSTRUCTION		

SURVEYORS SEAL:

STATE OF OHIO
RONALD W. EIFERT
6045
REGISTERED
PROFESSIONAL SURVEYOR

SIGNED:
DATE:

REV. BY	DATE	DESCRIPTION
FIELD REVIEW BY		DATE:
OWNERSHIP VERIFIED BY		DATE:
DATE COMPLETED 6/2/2006		

HORIZONTAL SCALE IN FEET
0 25 50 100

PID NO. 25433

R/W DESIGNER NWA
R/W REVIEWER RWE

RAILROAD PLAT

STA-21-12.48

1 / 1

124
124

2/12/2007 1:46:33 PM

H:\Projects\2006\2006-0007 STA-21-12.48 Part 2\Civil\Drawings\Right-of-Way\25433RD001.dgn
25433RD001.dgn