FRESHMARK

2016 MICROWAVE ADDITION

1888 SOUTHWAY STREET S.W. MASSILLON, OHIO 44646

ISSUED FOR PERMIT: JANUARY 06, 2020

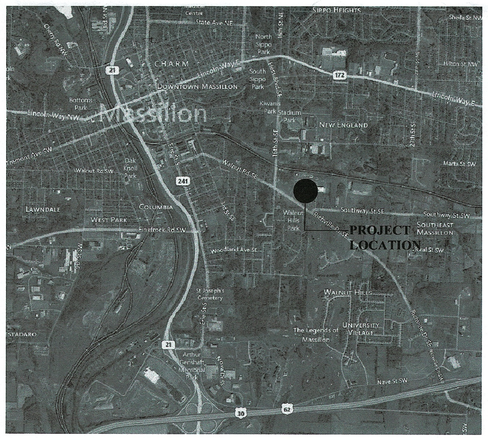

VICINITY MAP

SCALE: N.T.S.

PROJECT DATA - 2017 OHIO BUILDING CODE

USE GROUP CLASSIFICATION: EXISTING BUILDING F-1, S-1
NEW ADDITION F-1, S-1

THIS PROJECT CONSISTS OF EXPANSION TO EXISTING MICROWAVE LINES FOR FOOD PROCESSING FACILITY.

TYPE OF CONSTRUCTION: EXISTING BUILDING II-B
NEW ADDITION II-B

BUILDING COMPLIES AS "UNLIMITED AREA BUILDING" IN ACCORDANCE WITH OBC 507.4.

AREA OF NEW ADDITION 19,003 SF

ENTIRE EXISTING BUILDING AND NEW ADDITION SHALL BE EQUIPPED WITH AUTOMATIC FIRE SUPPRESSION SYSTEM.

CALCULATED OCCUPANT LOAD (FOOD PROCESSING FACILITY)
EXISTING BUILDING 558 PERSONS
NEW ADDITION 38 PERSONS
TOTAL OCCUPANCY 596 PERSONS

EXISTING RESTROOM FACILITIES ARE SUFFICIENT FOR ADDITIONAL NEW TOTAL OCCUPANT LOAD.

GENERAL NOTES

1. ALL WORK SHALL BE IN FULL COMPLIANCE WITH NATIONAL, STATE AND LOCAL CODES.
2. CONTRACTOR SHALL VERIFY EXISTING CONSTRUCTION AND DIMENSIONS, AND NOTIFY ARCHITECT OF ANY DISCREPANCIES PRIOR TO PROCEEDING WITH WORK.
3. CONTRACTOR SHALL BE RESPONSIBLE FOR OBTAINING AND FURNISHING ALL REQUIRED PERMITS AND INSPECTIONS.
4. CONTRACTOR SHALL MAINTAIN ALL REQUIRED EGRESS ROUTES FREE OF CONSTRUCTION EQUIPMENT, MATERIAL AND DEBRIS.
5. CONTRACTOR SHALL PROVIDE AND MAINTAIN FACILITIES FOR COLLECTION AND STORAGE OF CONSTRUCTION DEBRIS.

INDEX TO DRAWINGS

PREPARED FOR:

JOSEPH A. JEFFRIES CO.

MOTTER & MEADOWS
ARCHITECTS
600 Market Avenue North Canton, Ohio 44702

SET NO. _____

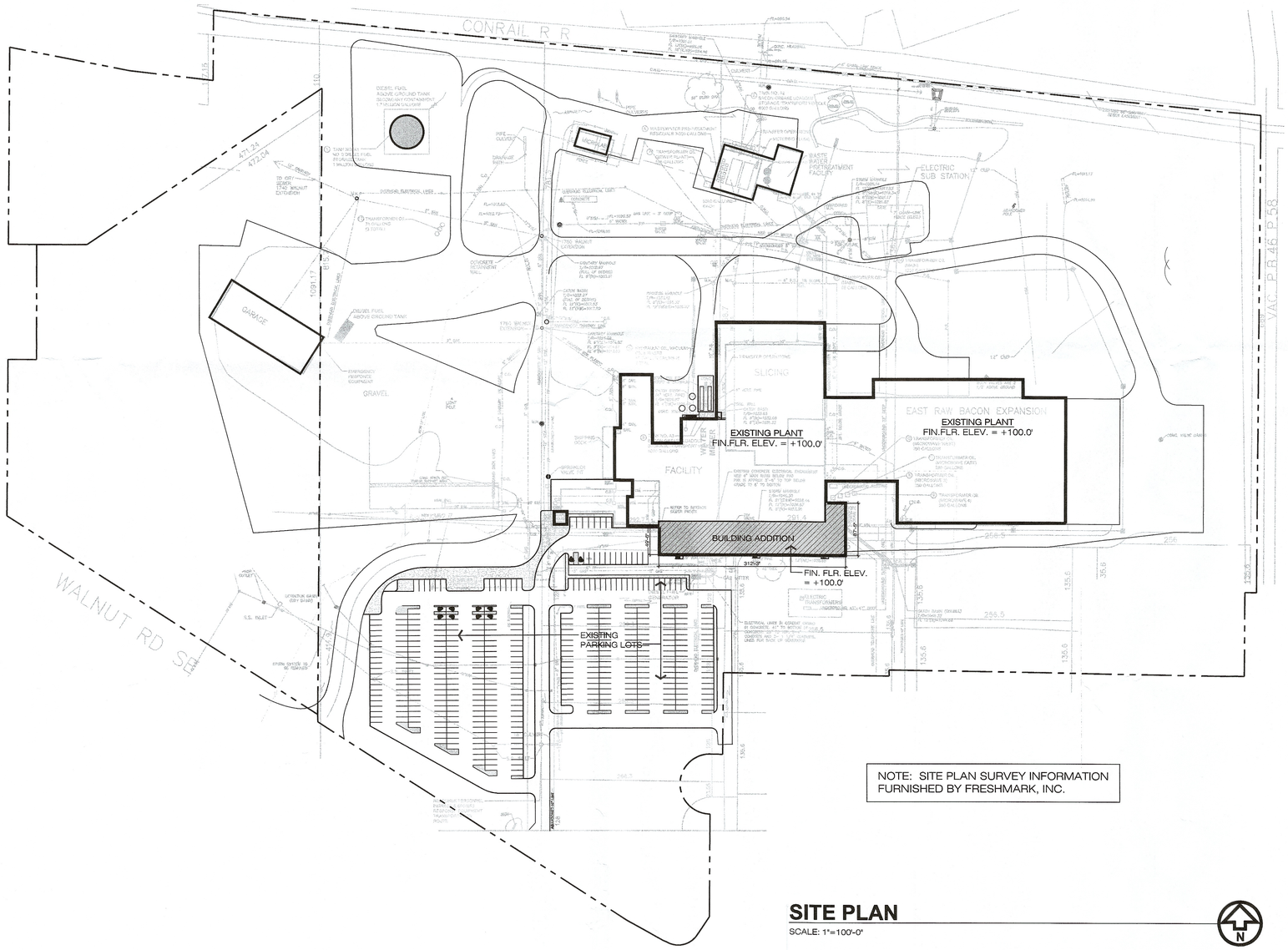

NOTE: SITE PLAN SURVEY INFORMATION FURNISHED BY FRESHMARK, INC.

SITE PLAN

SCALE: 1"=100'-0"

REVISIONS:

MOTTER & MEADOWS ARCHITECTS

600 MARKET AVENUE NORTH CANTON OHIO 44702

2016 MICROWAVE ADDITION
FRESHMARK MASSILLON PLANT
1888 SOUTHWAY STREET SE MASSILLON, OHIO 44646

PREPARED FOR:
JOSEPH A. JEFFRIES CO.

STATE OF OHIO
R.W.MEADOWS
6781
REGISTERED ARCHITECT
RODNEY W. MEADOWS
LICENSE #6781
EXPIRATION DATE
12-31-2021

THIS DWG :
SITE PLAN

COMM 16123
DATE 01-06-2020

DWG
A1.1

REVISIONS:

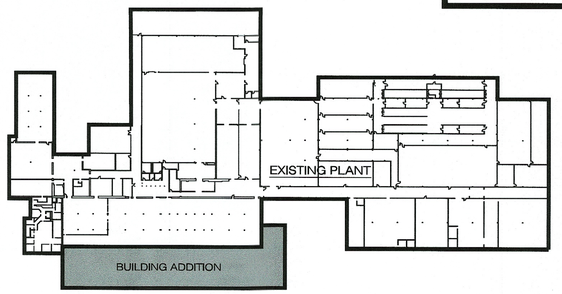

KEY PLAN

SCALE: N.T.S.

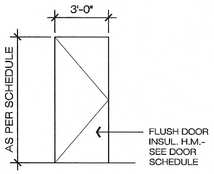

DOOR TYPE 'A'

SCALE: 1/4"=1'-0"

DOOR SCHEDULE

DOOR NO.	DOOR						FRAME				HARDWARE TYPE	U.L. LABEL	NOTES
	W	H	T	TYPE	MAT'L	CONSTR	MAT'L	JAMB	HEAD	TYPE			
01	3'-0"	7'-0"	1'-3/4"	A	H.M.	S.S.,INSUL	SSC/P,GALV.	2"	2"				1,2,3,4,5,6,7
02	3'-0"	7'-0"	1'-3/4"	A	H.M.	S.S.,INSUL	SSC/P,GALV.	2"	2"				1,2,3,4,5,6,7
03	3'-0"	7'-0"	1'-3/4"	A	H.M.	S.S.,INSUL	SSC/P,GALV.	2"	2"				1,2,3,4,5,6,7
EX	EXISTING												

NOTES:

1. ALL DOOR HARDWARE SHALL COMPLY WITH THE REQUIREMENTS OF THE 2010 ADA STANDARDS FOR ACCESSIBLE DESIGN AND THE 2011 O.B.C.
2. DOOR HARDWARE SHALL BE STANDARD COMMERCIAL GRADE HARDWARE.
3. DOOR SHALL BE EQUIPPED WITH (3) MEDIUM DUTY HINGES UNLESS OTHERWISE NOTED
4. DOOR SHALL BE EQUIPPED WITH A LEVER-TYPE LOCKSET
   FUNCTION SHALL BE AS FOLLOWS UNLESS OTHERWISE NOTED:
   EGRESS DOORS: ENTRANCE FUNCTION
   OFFICE: OFFICE FUNCTION
   STORAGE: STOREROOM FUNCTION
   RESTROOMS: PRIVACY FUNCTION
5. PANIC HARDWARE
6. CLOSER
7. DOOR THRESHOLD SHALL NOT EXCEED 1/2" IN HEIGHT IN COMPLIANCE WITH O.B.C.1008.1.7

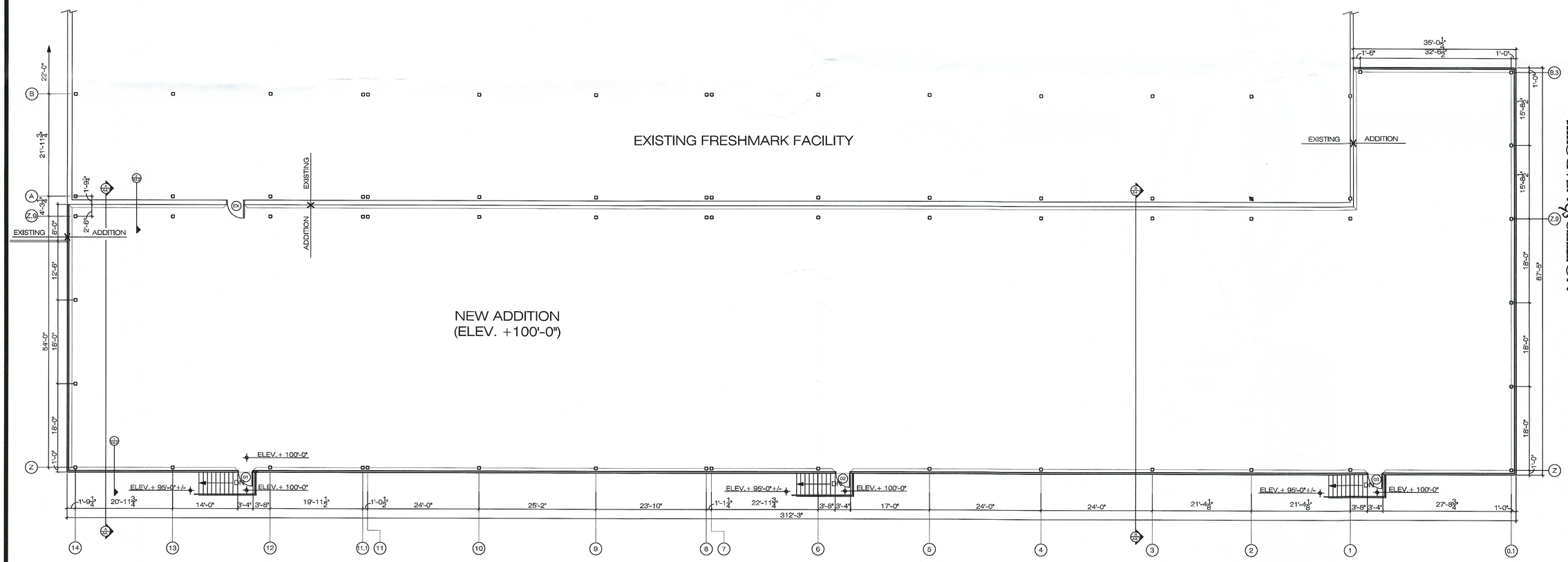

PARTIAL FLOOR PLAN

SCALE: 3/32" = 1'-0"

600 MARKET AVENUE NORTH CANTON OHIO 44702

MOTTER MEADOWS ARCHITECTS

PREPARED FOR:
JOSEPH A. JEFFRIES CO.

2016 MICROWAVE ADDITION
FRESHMARK MASSILLON PLANT
1888 SOUTHWAY STREET SE MASSILLON, OHIO 44646

STATE OF OHIO
R.W.MEADOWS
6781
REGISTERED ARCHITECT
RODNEY W. MEADOWS
LICENSE #6781
EXPIRATION DATE
12-31-2021

THIS DWG :
PARTIAL FLOOR PLAN
DOOR SCHEDULE
DOOR TYPES

COMM 16123
DATE 01-06-2020

DWG
A2.1

REVISIONS:

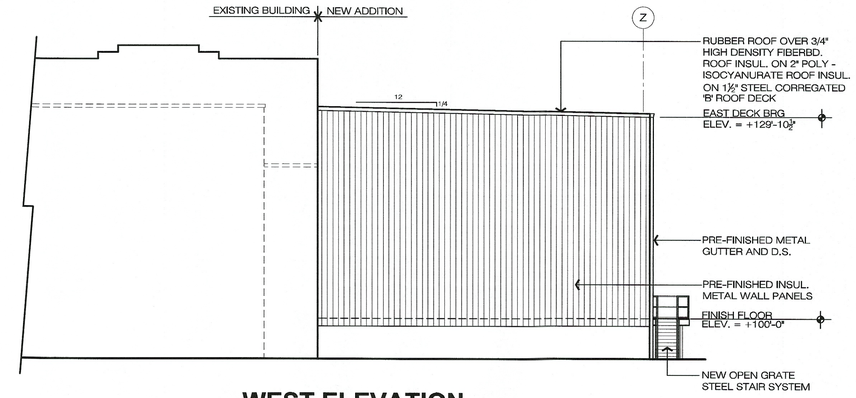

WEST ELEVATION

SCALE: 3/32" = 1'-0"

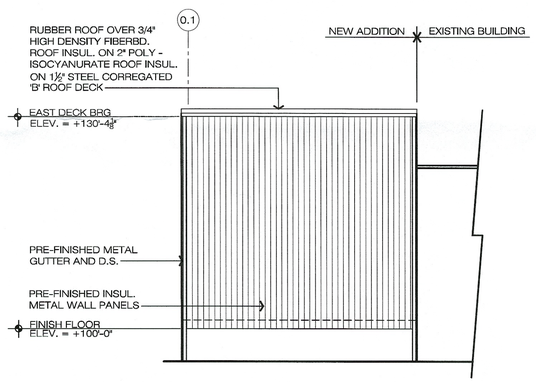

NORTH ELEVATION

SCALE: 3/32" = 1'-0"

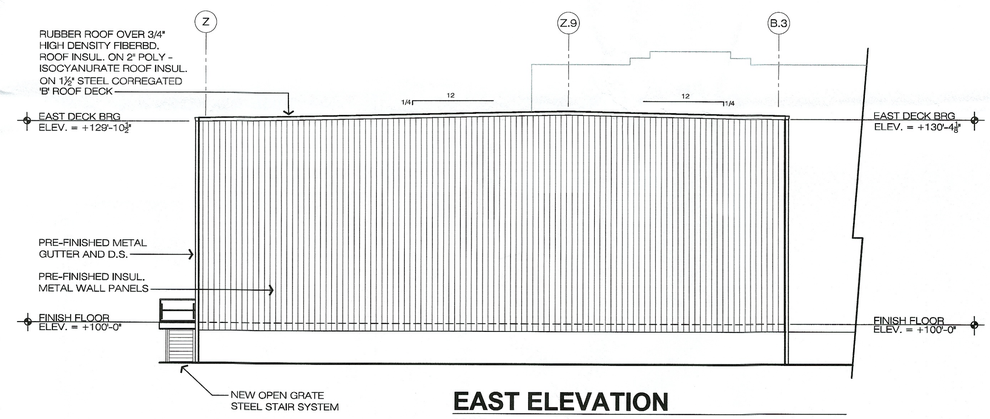

EAST ELEVATION

SCALE: 3/32" = 1'-0"

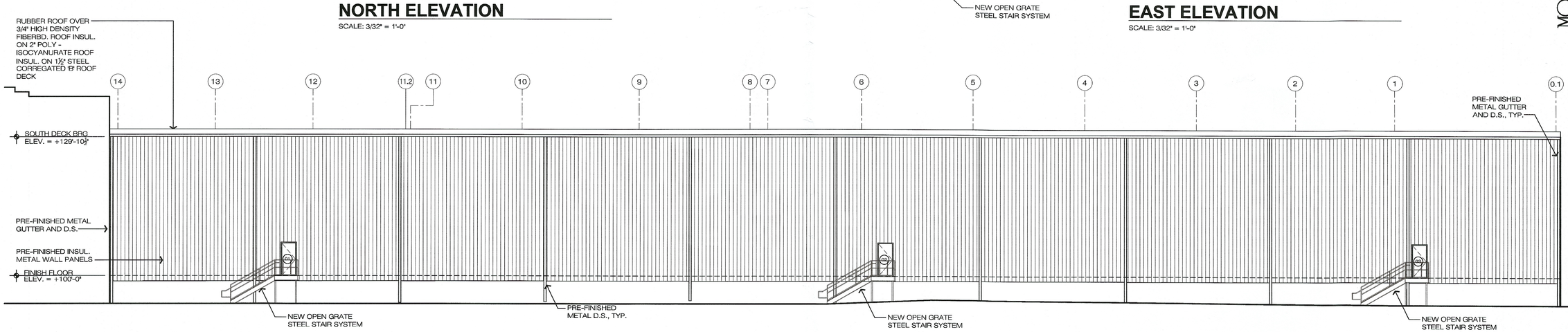

SOUTH ELEVATION

SCALE: 3/32" = 1'-0"

MOTTER & MEADOWS ARCHITECTS

600 MARKET AVENUE NORTH CANTON OHIO 44702

2016 MICROWAVE ADDITION
FRESHMARK MASSILLON PLANT
1888 SOUTHWAY STREET SE MASSILLON, OHIO 44646

PREPARED FOR:
JOSEPH A. JEFFRIES CO.

STATE OF OHIO
R.W.MEADOWS 6781
REGISTERED ARCHITECT
RODNEY W. MEADOWS
LICENSE #6781
EXPIRATION DATE
12-31-2021

THIS DWG :
ELEVATIONS

COMM 16123
DATE 01-06-2020

DWG
A3.1

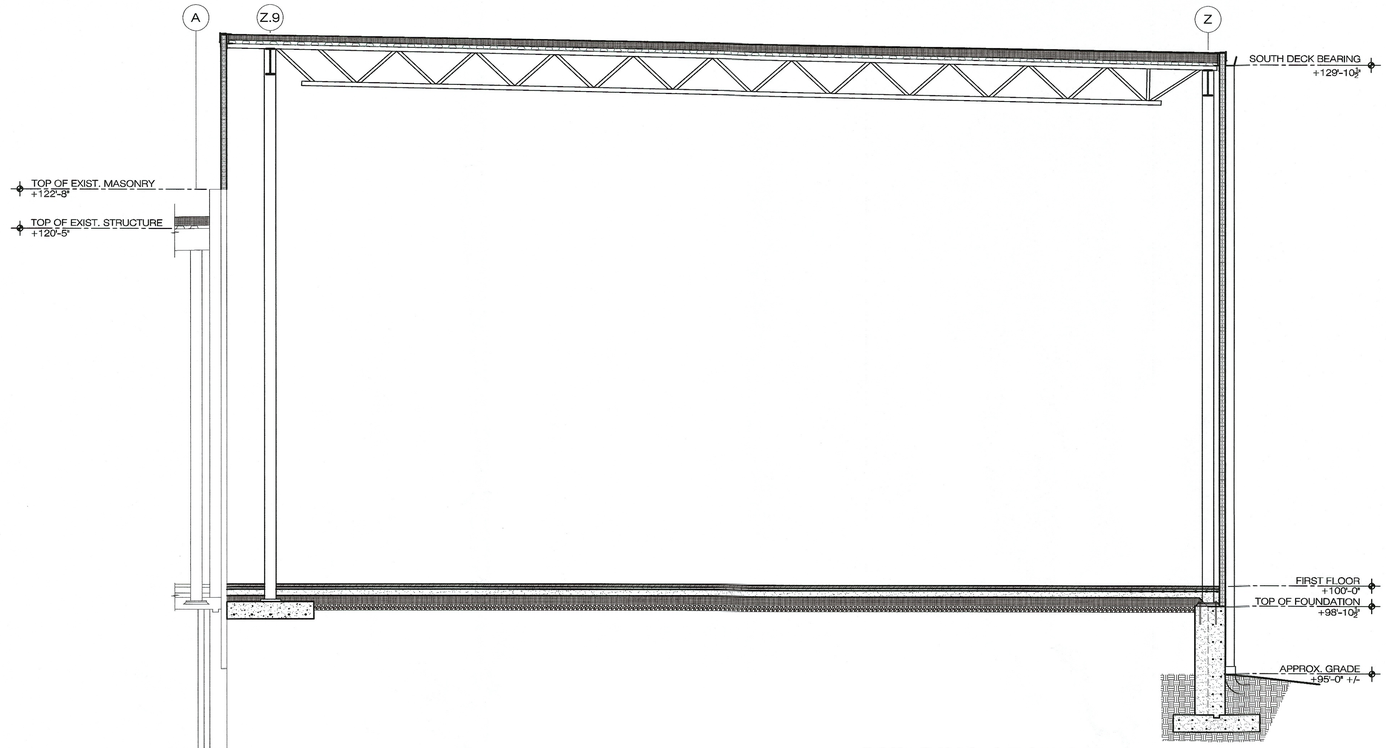

BUILDING SECTION

SCALE: 1/4" = 1'-0"

B
A4.1

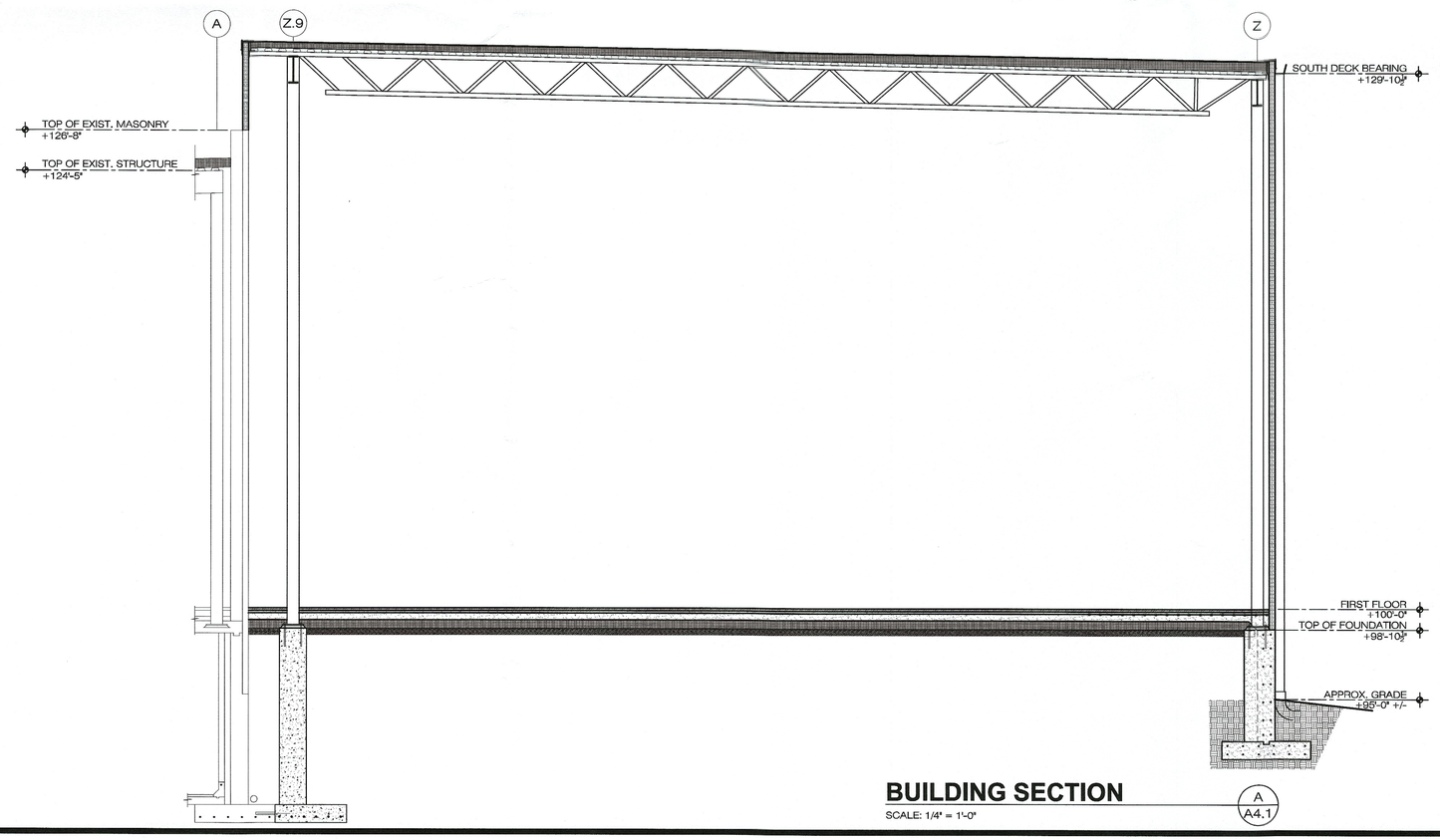

BUILDING SECTION

SCALE: 1/4" = 1'-0"

A
A4.1

REVISIONS:

MOTTER & MEADOWS
ARCHITECTS

600 MARKET AVENUE NORTH CANTON OHIO 44702

2016 MICROWAVE ADDITION
FRESHMARK MASSILLON PLANT
1888 SOUTHWAY STREET SE MASSILLON, OHIO 44646

PREPARED FOR:
JOSEPH A. JEFFRIES CO.

STATE OF OHIO
R.W.MEADOWS
6781
REGISTERED ARCHITECT

RODNEY W. MEADOWS
LICENSE #6781
EXPIRATION DATE
12-31-2021

THIS DWG :
BUILDING SECTIONS

COMM 16123
DATE 01-06-2020

DWG
A4.1

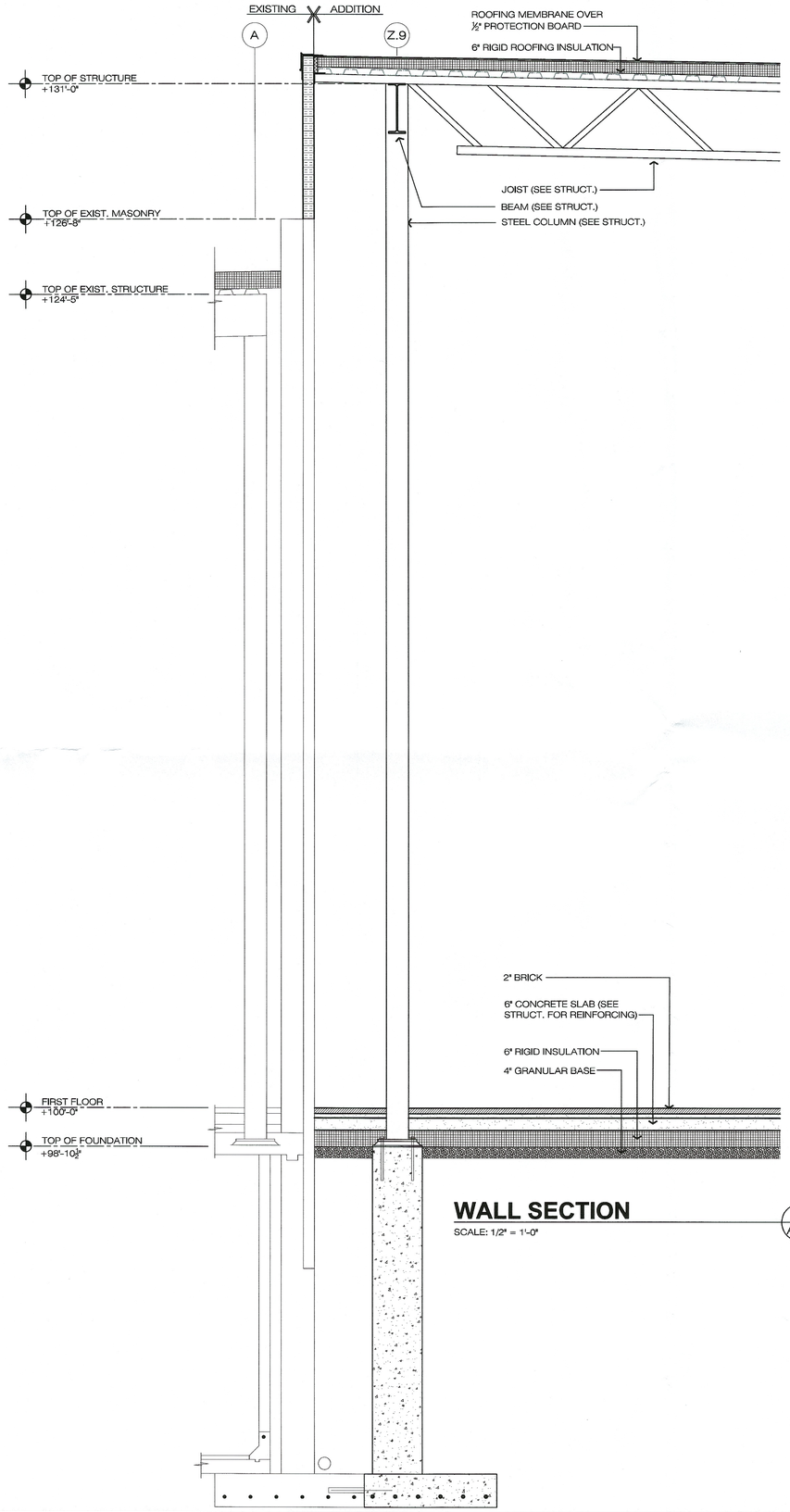

WALL SECTION

SCALE: 1/2" = 1'-0"

2 / A4.2

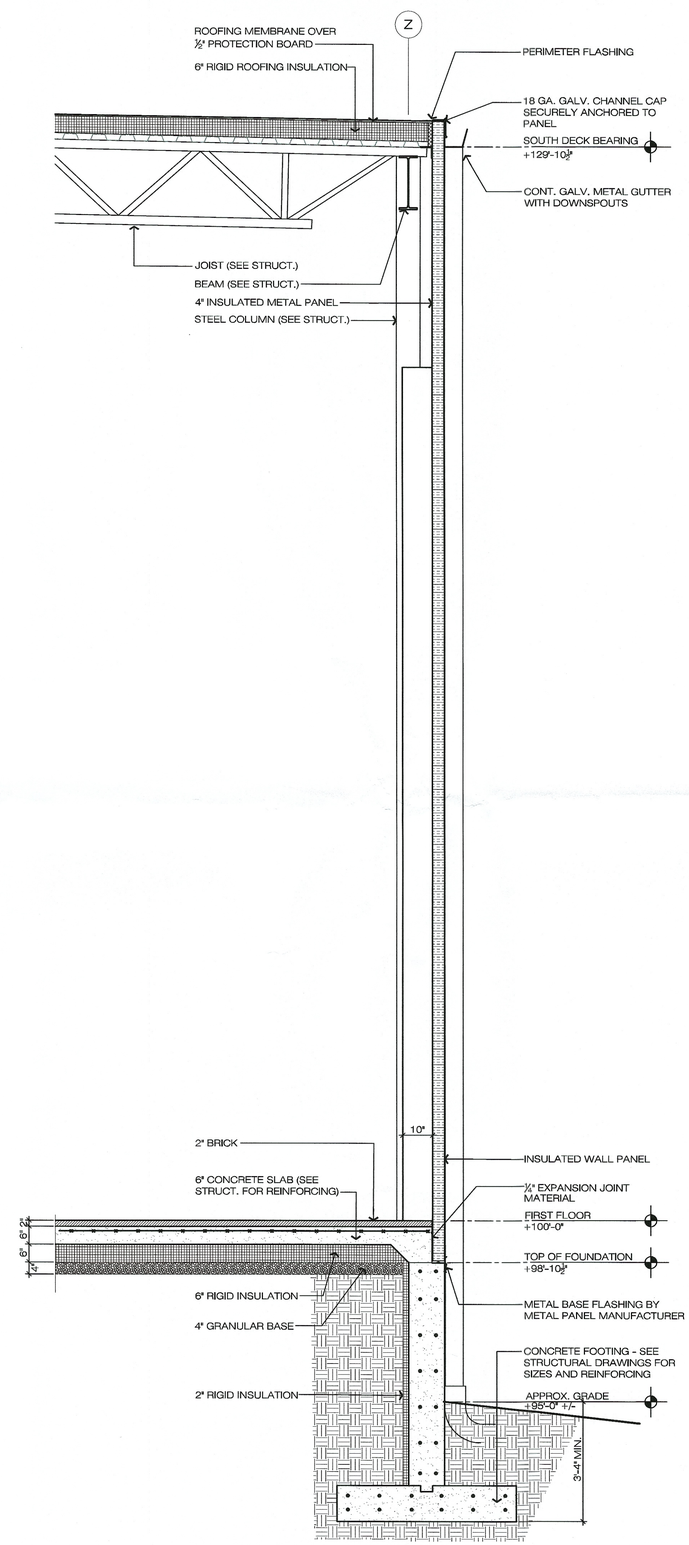

WALL SECTION

SCALE: 1/2" = 1'-0"

1 / A4.2

REVISIONS:

MOTTER & MEADOWS ARCHITECTS

600 MARKET AVENUE NORTH CANTON OHIO 44702

2016 MICROWAVE ADDITION
FRESHMARK MASSILLON PLANT
1888 SOUTHWAY STREET SE MASSILLON, OHIO 44646

PREPARED FOR:
JOSEPH A. JEFFRIES CO.

STATE OF OHIO
R.W.MEADOWS
6781
REGISTERED ARCHITECT

RODNEY W. MEADOWS
LICENSE #6781
EXPIRATION DATE
12-31-2021

THIS DWG :
WALL SECTIONS

COMM 16123
DATE 01-06-2020

DWG
A4.2

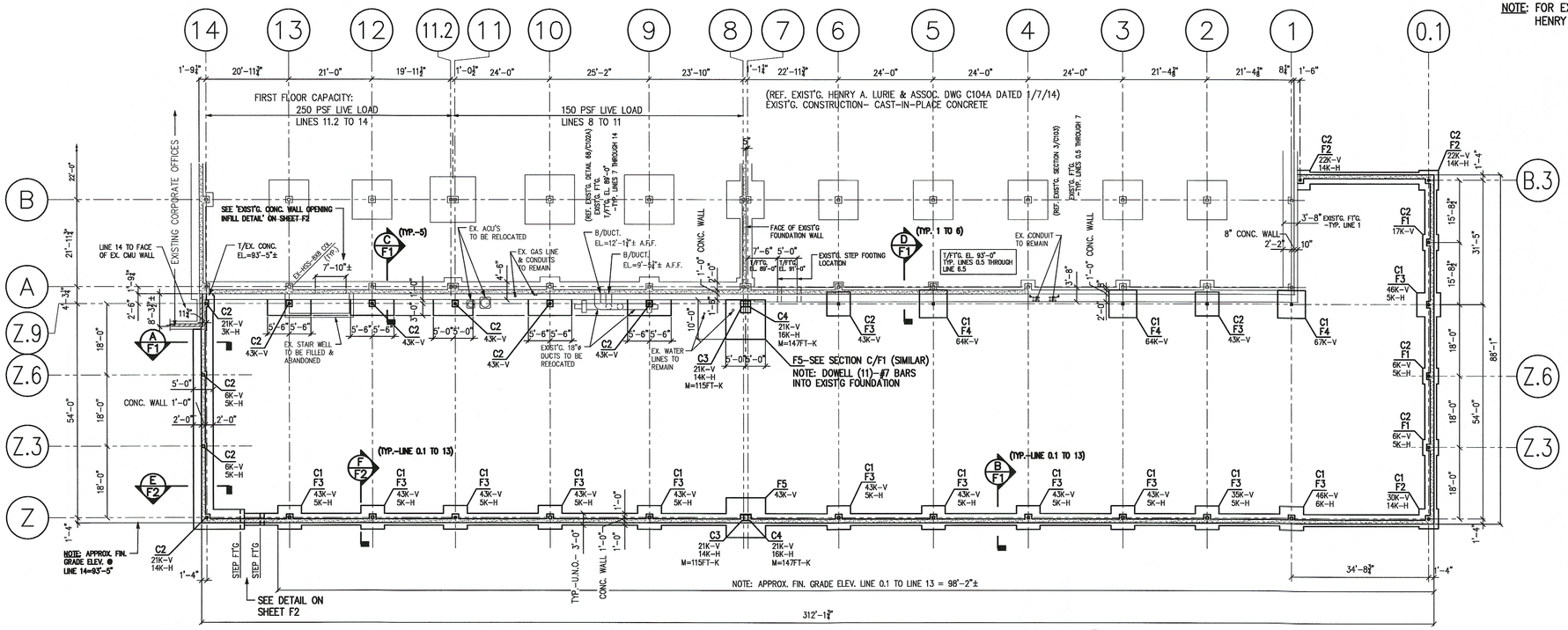

NOTE: BASE PLATES FOR HSS-8X8 COL'S=14½"X14½"X1"
W/(4)-¾"ø A.B.'S @ 11½" C/C EA. WAY
C1= HSS8X8X⅝
C2= HSS8X8X¼
C3= W18X76
C4= W18X86

FOUNDATION PLAN

1/16"=1'-0"

FOOTING SCHEDULE		
MARK	DIMENSIONS LXWXt	REINFORCING
F1	4'-0X4'-0X1'-0	(6)-#4 @ 8¼" C/C EA. WAY
F2	5'-0X5'-0X1'-0	(5)-#6 @ 13½" C/C EA. WAY
F3	6'-0X6'-0X1'-0	(6)-#6 @ 13¼" C/C EA. WAY
F4	7'-0X7'-0X1'-2	(8)-#6 @ 11¼" C/C EA. WAY
F5	10'-0X10'-0X1'-8	(11)-#7 @ 11½" C/C EA. WAY

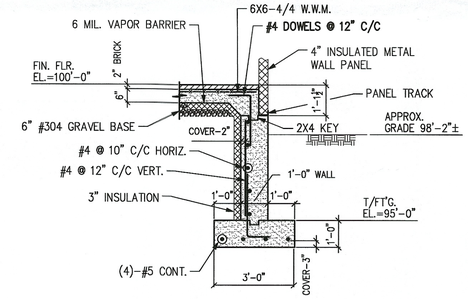

SECTION-B/F1

3/8"=1'-0"

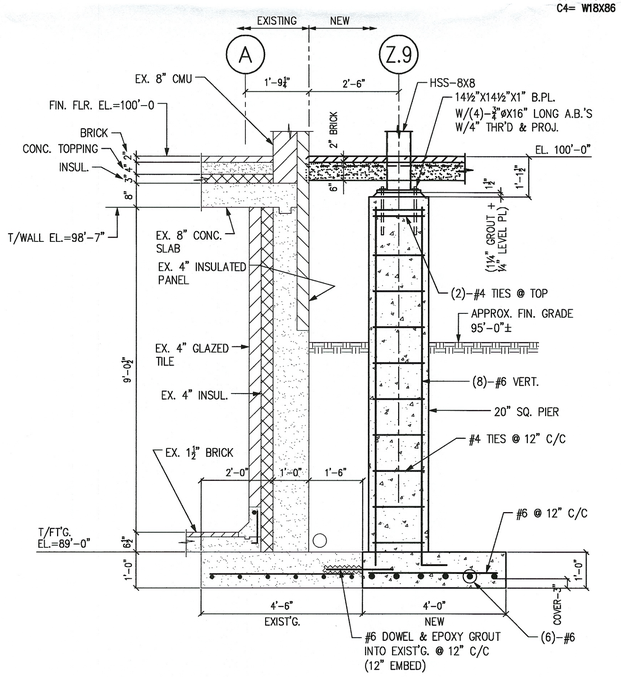

SECTION-C/F1

1/2"=1'-0"

(TYP. FOR 6 FT'G.)

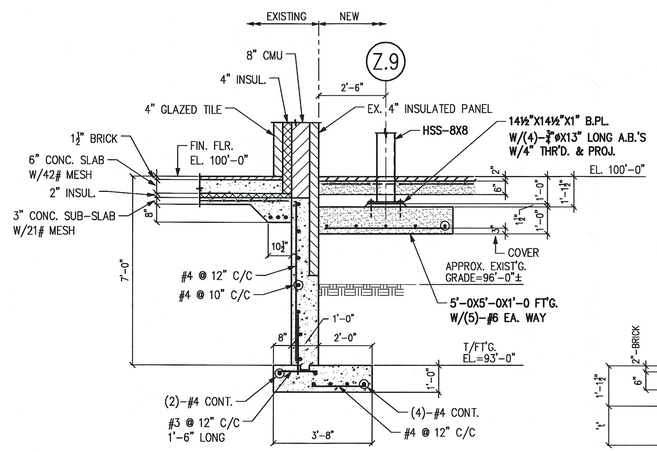

SECTION-D/F1

3/8"=1'-0"

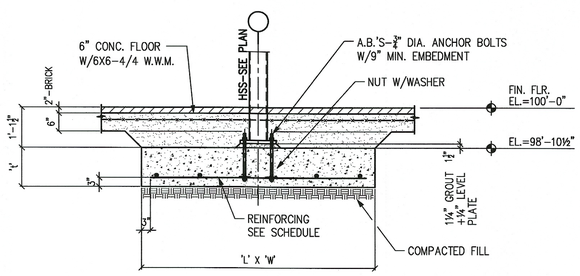

INTERIOR FOOTING DETAIL

1/2"=1'-0"

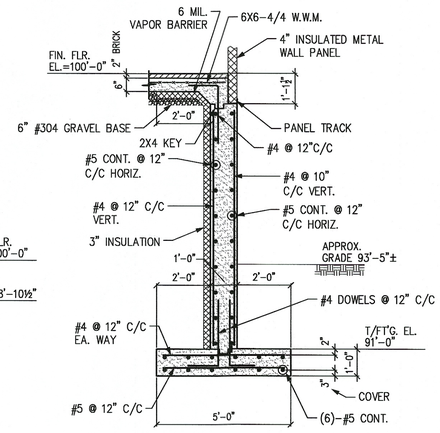

SECTION-A/F1

3/8"=1'-0"

NOTE: FOR EXISTING FOUNDATION INFORMATION REFER TO HENRY A. LURIE & ASSOC. DWGS. C102, C102A, C103, C104 & C104A DATED 12/14/73, 1/7/14, 12/14/73, 12/14/73, 01/7/14

FOUNDATION NOTES:

1) ALL CONCRETE CONSTRUCTION SHALL CONFORM TO ACI 301, "SPECIFICATIONS FOR STRUCTURAL CONCRETE" AND ACI 302, 305, AND 306 LATEST EDITIONS, UNLESS NOTED OTHERWISE.
2) ALL DETAILING, FABRICATION, AND PLACING OF REINFORCING BARS, UNLESS OTHERWISE NOTED, SHALL CONFORM TO ACI 318, "BUILDING CODE REQUIREMENTS FOR STRUCTURAL CONCRETE", ACI 117, "STANDARD SPECIFICATIONS FOR TOLERANCES FOR CONCRETE CONSTRUCTION AND MATERIALS", AND THE LATEST ACI DETAILING MANUAL.
3) f'c = 4,000 P.S.I. AT 28 DAYS CURED STRENGTH. SUBMIT CONCRETE MIX DESIGN DATA FOR REVIEW.
4) REINF. BARS ARE TO BE WITH fy = 60,000 P.S.I. – ASTM A615, GR. 60 (MINIMUM).
5) NO WATER IS TO BE ADDED TO THE CONCRETE DURING DELIVERY OR AT THE PROJECT SITE WITHOUT THE APPROVAL OF BOTH THE CONCRETE MIX DESIGNER AND THE PROJECT ENGINEER OF RECORD.
6) SOILS ARE BASED ON SAFE BEARING CAPACITY OF 2,000 P.S.F. (NET) PER TESTING BY TIMMERMAN GEOTECHNICAL GROUP. ALL BEARING ELEVATIONS OF FOOTINGS TO BEAR EITHER ON VIRGIN SOIL OR ENGINEERED BACKFILL. AFTER EXCAVATION IS COMPLETED AND BEFORE ANY FOUNDATIONS ARE CONSTRUCTED, THE CONTRACTOR SHALL EXAMINE THE SOIL. IF THERE IS ANY DOUBT ABOUT THE SOIL'S ABILITY TO CARRY THIS LOAD, THE CONTRACTOR SHALL BRING THIS INFORMATION TO THE ATTENTION OF THE ENGINEER AND, IF NECESSARY, THE CONTRACTOR SHALL STRENGTHEN THE FOUNDATION AS DIRECTED BY THE ENGINEER.
7) CONCRETE SLAB ON GRADE SHALL BE PLACED ON EITHER VIRGIN SOIL OR ENGINEERED BACKFILL WITH BEARING SURFACES PREPARED AND VERIFIED AS MEETING DESIGN REQUIREMENTS.
8) CONCRETE SLAB ON GRADE REINFORCEMENT SHALL BE SUPPORTED ON CHAIRS OR BOLSTERS TO MAINTAIN 2" CLEARANCE BELOW FINISHED FLOOR (TYPICAL UNLESS NOTED OTHERWISE).
9) ALL DETAILING, FABRICATION & PLACING OF REINFORCING BARS, UNLESS NOTED OTHERWISE, SHALL CONFORM TO ACI 318-14, "BUILDING CODE REQUIREMENTS FOR STRUCTURAL CONCRETE", & THE LATEST ACI "MANUAL OF STANDARD PRACTICE FOR DETAILING REINFORCED CONCRETE STRUCTURES". LAP SPLICES IN ACCORDANCE WITH THE TABLE BELOW FOR 000 PSI NORMAL WEIGHT CONCRETE:

TOP BARS (W/>12" CONCRETE BELOW SPLICE)			ALL OTHER BARS		
BAR SIZE	LAP	ANCHORAGE	BAR SIZE	LAP	ANCHORAGE
#3	24"	19"	#3	19"	15"
#4	33"	25"	#4	25"	19"
#5	41"	31"	#5	31"	24"
#6	49"	37"	#6	37"	29"
#7	71"	54"	#7	54"	42"
#8	81"	62"	#8	62"	48"
#9	91"	70"	#9	70"	54"
#10	100"	77"	#10	77"	59"

WHEN LAPPING BARS OF DIFFERENT SIZES, USE THE LAP DIMENSION OF THE SMALLER BAR OR THE ANCHORAGE DIMENSION OF THE LARGER BAR. USE WHICHEVER DIMENSION IS LARGER.

10) PROVIDE A MINIMUM OF (2) NO. 4 BARS AT TOP OF WALL FOOTING UNDER DOORS AND AT OTHER OPENINGS 4'-0" LONGER THAN THE OPENING.
11) ALL HOOKS SHOWN ON DRAWINGS SHALL BE STANDARD HOOKS.
12) ALL FOUNDATION SUBGRADES CONSIST OF MEDIUM DENSE SILT AND SAND, MEDIUM STIFF CLAY, OR BETTER, AND BE FREE OF SOFT, LOOSE, OR ORGANIC SOILS AND MISCELLANEOUS INCLUSIONS.
13) KEEP FOUNDATION EXCAVATIONS FREE OF WATER AT ALL TIMES. ALL SOFT OR WEAKENED SOIL OR DELETERIOUS CONDITIONS SHOULD BE REMEDIED BY UNDERCUTTING THE UNSUITABLE MATERIAL AND REPLACEMENT WITH LEAN CONCRETE.
14) STRUCTURAL FILL SHALL BE PLACED IN 8" LIFTS COMPACTED TO 98% STANDARD PROCTOR DENSITY, UNLESS STRICTER REQUIREMENT IS SPECIFIED OR RECOMMENDED BY THE SOILS ENGINEER.
15) THE BOTTOM OF ALL EXTERIOR FOOTINGS SHALL BE LOCATED BELOW THE DEPTH OF POTENTIAL FROST PENETRATION (MINIMUM), PER GEOGRAPHIC LOCATION. ADJUST BOTTOM OF FOOTINGS AS REQUIRED.
16) EXISTING FOUNDATIONS (WHERE APPLICABLE):
    a) EXISTING FOUNDATIONS SHOWN ON DRAWINGS ARE APPROXIMATE. EXACT CONDITION MUST BE VERIFIED PRIOR TO START OF NEW CONSTRUCTION.
    b) WHERE NEW FOUNDATIONS MEET EXISTING FOUNDATIONS, THE BOTTOM ELEVATIONS SHALL MATCH. UNLESS OTHERWISE NOTED, NEW FOUNDATIONS SHALL NOT BEAR BELOW EXISTING FOUNDATIONS.
    c) WHERE FOUNDATION STEPS ARE INDICATED, THEY SHALL BE STEPPED AT A RATIO OF 2 HORIZONTAL TO 1 VERTICAL.
17) ALL SPREAD FOOTINGS TO CARRY NO MORE THAN THE RECOMMENDED NET SOIL BEARING PRESSURE WILL ALLOW. THE NET PRESSURE IS DEFINED AS THE SUM OF ALL STRUCTURAL LOADS, WEIGHT OF FOUNDATION CONCRETE, FLOOR LOADINGS, AND SOIL ABOVE FOOTINGS DIVIDED BY THE CORRESPONDING BEARING AREA; LESS ANY EXISTING EFFECTIVE OVERBURDEN PRESSURE AT BEARING ELEVATION.
18) ALL STRIP FOOTINGS SHOULD HAVE A WIDTH NO LESS THAN 16" AND CONTAIN SUFFICIENT REINFORCING TO SPAN ANY LOCAL, MORE COMPRESSIBLE ZONES.
19) NO BACKFILLING OF FOUNDATION WALLS SHALL BE UNDERTAKEN UNTIL SUITABLE WALL BRACING, TEMPORARY OR PERMANENT, HAS BEEN PROVIDED. BACKFILL BOTH SIDES OF WALL SIMULTANEOUSLY UNLESS BRACED WALL CONSTRUCTION IS INDICATED.
20) REFER TO BUILDING CODE SECTION 1704 TO DETERMINE IF SPECIAL INSPECTIONS ARE REQUIRED FOR THE PROJECT.

PROJECT NAME:

FRESH MARK

MICROWAVE LINE ADDITION

1888 SOUTHWAY ST SE MASSILLON, OHIO 44646

CONSTRUCTION MANAGER:
JOSEPH A. JEFFRIES
DARRELL MOONEY
5211 LOUISVILLE ST NE
LOUISVILLE, OH 44614
330-454-6103

CONSULTANTS:

STRUCTURAL

STATE OF OHIO PROFESSIONAL ENGINEER DAVID F. LAWLESS 51885 REGISTERED

David F. Lawless
12-9-19

MILESTONES & REVISIONS

REV.	DATE	DESCRIPTION
1	12-23-19	FOR CUSTOMER REVIEW
0	12-9-19	FOR PLAN APPROVAL

DDMG
DOVER DESIGN & MANAGEMENT GROUP, LLC
CONSULTING ENGINEERS • STRUCTURAL DESIGN • PROJECT MANAGEMENT
5725 CROWN RD, NW
DOVER, OH 44622
PH: 330-343-4443
FAX: 330-364-3125

DRAWN BY: JULIA
CHECKED BY: DL

SHEET TITLE: FOUNDATION PLAN & DETAILS

PROJECT NO. 10055

CONSULTANT PROJECT NO. #XXXX

SHEET NO. F1

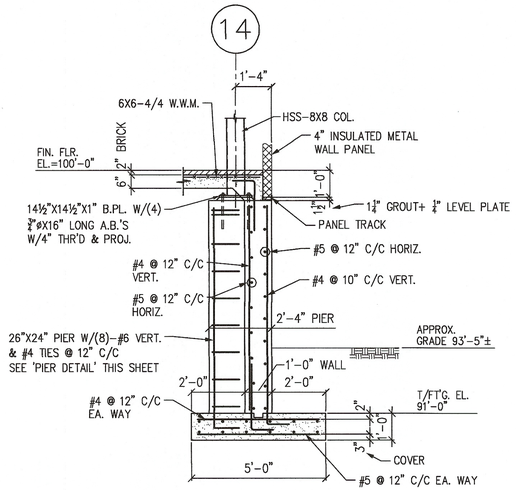

SECTION-E/F2

3/8"=1'-0"

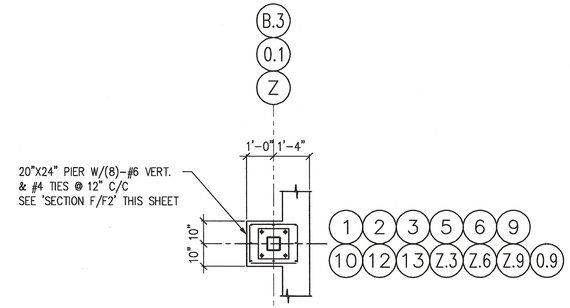

PIER DETAIL

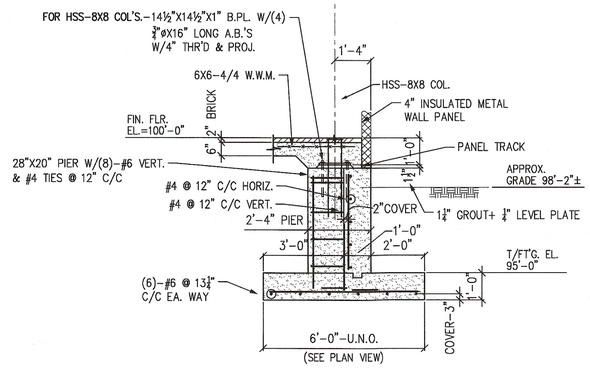

SECTION-F/F2

3/8"=1'-0"

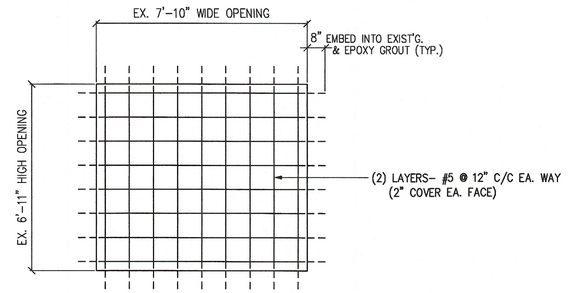

EXIST'G CONCRETE WALL OPENING INFILL DETAIL

(BETWEEN LINES 12 & 13)

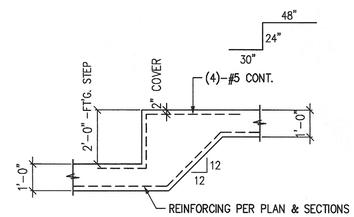

STEP FOOTING DETAIL

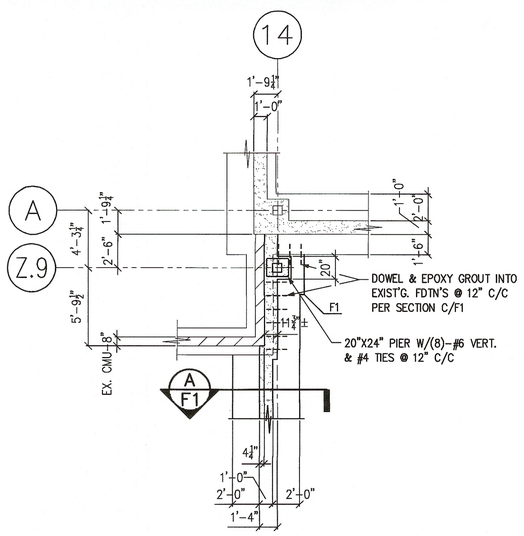

FOOTING DETAIL AT LINE Z.9/14

3/16"=1'-0"

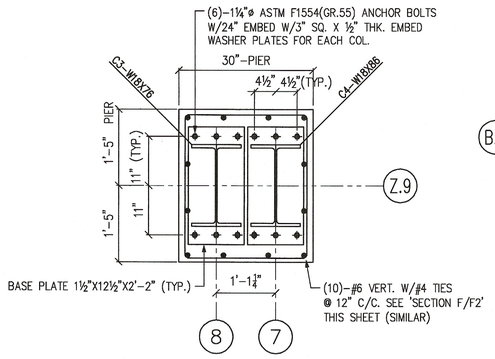

PIER DETAIL

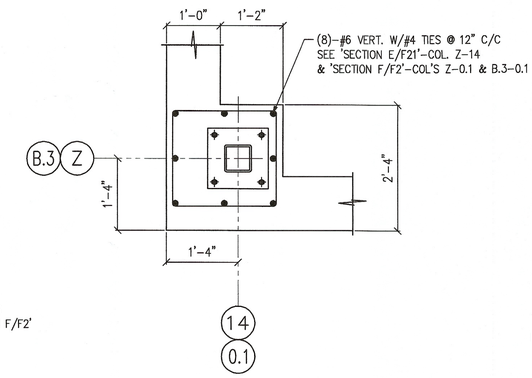

PIER DETAIL

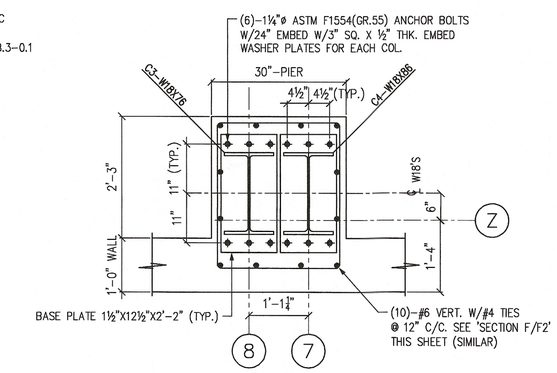

PIER DETAIL

REF. SO-9536

PROJECT NAME:

FRESH MARK

MICROWAVE LINE ADDITION

1888 SOUTHWAY ST SE MASSILLON, OHIO 44646

CONSTRUCTION MANAGER:

JOSEPH A. JEFFRIES
DARRELL MOONEY
5211 LOUISVILLE ST NE
LOUISVILLE, OH 44614
330-454-6103

CONSULTANTS:

STRUCTURAL

STATE OF OHIO — DAVID F. LAWLESS 51885 REGISTERED — PROFESSIONAL ENGINEER

David F. Lawless
12-9-19

MILESTONES & REVISIONS

REV.	DATE	DESCRIPTION
1	12-23-19	FOR CUSTOMER REVIEW
0	12-9-19	FOR PLAN APPROVAL

DDMG
DOVER DESIGN & MANAGEMENT GROUP, LLC
CONSULTING ENGINEERS • STRUCTURAL DESIGN • PROJECT MANAGEMENT
5725 CROWN RD, NW
DOVER, OH 44622
PH: 330-343-4443
FAX: 330-364-3125

DRAWN BY: JULIA
CHECKED BY: DL

SHEET TITLE

FOUNDATION DETAILS

PROJECT NO. 10055

CONSULTANT PROJECT NO. #XXXX

SHEET NO. F2

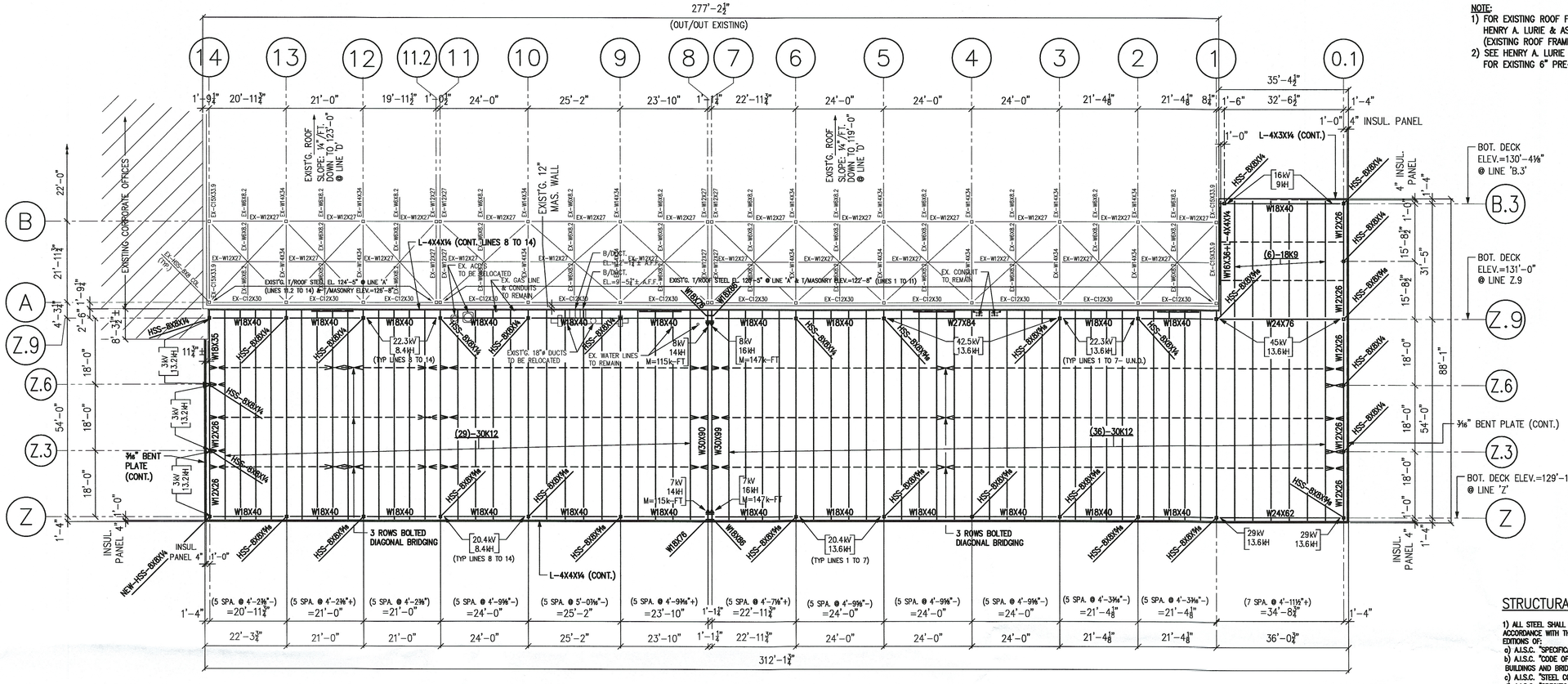

ROOF FRAMING PLAN

1/16"=1'-0"

NOTE: ATTACH 1.5B22 GA. GALV. ROOF DECK W/ MIN. #12 TEK SCREWS ON 36/7 PATTERN W/3-#10 TEK SIDELAP FASTENERS PER SPAN (317 PLF DIAPHRAGM SHEAR STRENGTH)

► = MOMENT CONNECTION

NOTE:
1) FOR EXISTING ROOF FRAMING PLAN INFORMATION, REFER TO HENRY A. LURIE & ASSOC. DWG C106 DATED 12/14/73 (EXISTING ROOF FRAMING DESIGN: 25 PSF LIVE LOAD)
2) SEE HENRY A. LURIE & ASSOC. DWG C108 DATED 12/14/73 FOR EXISTING 6" PRE-FAB INSULATED ROOF PANEL

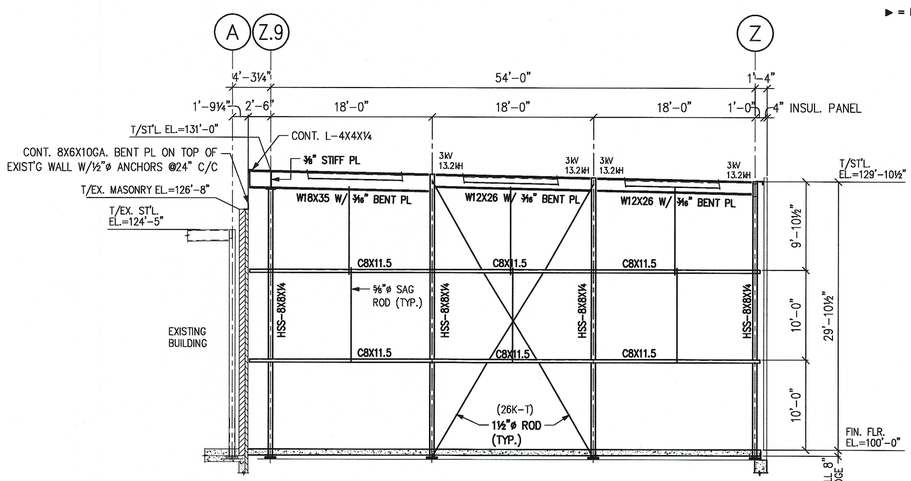

WEST ELEVATION @ LINE 14

1/8"=1'-0"

(LOOKING EAST)

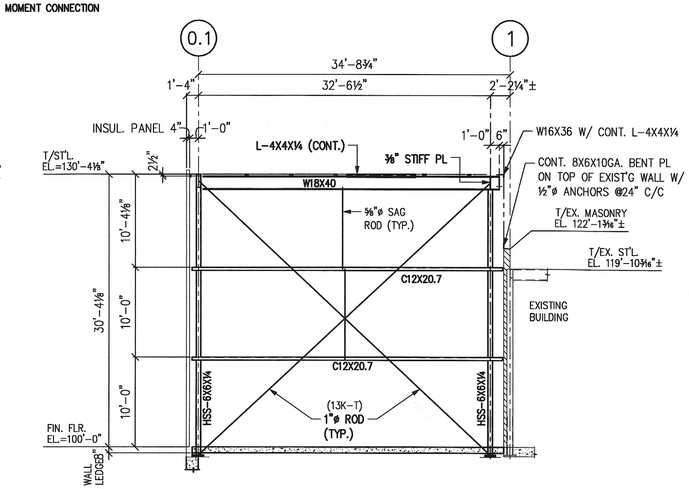

NORTH ELEVATION @ LINE B.3

1/8"=1'-0"

(LOOKING SOUTH)

OBC NOTES:

21) STRUCTURAL DESIGN DATA (OBC SECTION 1603):

DESIGN-GROUND FLOOR LIVE LOAD = 200 P.S.F.
FLAT ROOF SNOW LOAD = 17.5 P.S.F.
GROUND SNOW LOAD = 25 P.S.F.
SNOW EXPOSURE FACTOR: C_e = 1.0
SNOW IMPORTANCE FACTOR: I_s = 1.0
SNOW DRIFT SURCHARGE : SEE PLAN
THERMAL FACTOR: C_t = 1.0
DESIGN-WIND LOAD = 15.7 P.S.F. POSITIVE INTERNAL
ULT. WIND SPEED: 115 MPH
NOM. DESIGN WIND SPEED = 90 MPH
WIND EXPOSURE: B
MEAN ROOF HEIGHT: < 32'
INTERNAL PRESSURE COEFFICIENT: GC_{pi} = ±0.18
ROOF LIVE LOAD = 20 P.S.F.
EARTHQUAKE LOADS: SEISMIC USE GROUP = I (I_E = 1.0)
S_{DS}=0.129 S_{D1}=0.050 S_{DS}÷S_{D1} =0.136÷0.080
SITE CLASS: D
SEISMIC DESIGN CATEGORY: B
RESPONSE MODIFICATION FACTOR: R=3
SEISMIC RESPONSE COEFFICIENT: C_{sm}=0.046
DESIGN BASE SHEAR: 0.3k/FT.
ANALYSIS PROCEDURE: EQUIVALENT LATERAL FORCE METHOD
BASIC SFRS: STRUCTURAL STEEL NOT SPECIFICALLY DETAILED FOR SEISMIC RESISTANCE

NOTE: THE EFFECTS OF BLOWING AND DRIFTING SHOWN ON THE EXISTING ROOF HAVE BEEN CONSIDERED

STRUCTURAL STEEL NOTES:

1) ALL STEEL SHALL BE DESIGNED, DETAILED, FABRICATED, AND ERECTED IN ACCORDANCE WITH THE APPLICABLE LOCAL BUILDING CODE AND THE LATEST EDITIONS OF:
a) A.I.S.C. "SPECIFICATION FOR STRUCTURAL STEEL BUILDINGS"
b) A.I.S.C. "CODE OF STANDARD PRACTICE FOR STRUCTURAL STEEL BUILDINGS AND BRIDGES"
c) A.I.S.C. "STEEL CONSTRUCTION MANUAL"
d) A.I.S.C. "SPECIFICATIONS FOR STRUCTURAL JOINTS USING A.S.T.M. A325 OR A490 BOLTS"
2) STRUCTURAL STEEL:
W SHAPES = A.S.T.M. A992 (Fy=50 k.s.i.)
M, S, AND C SHAPES = A.S.T.M. A36 – U.N.O.
BARS, PLATES AND ANGLES = A.S.T.M. A36 – U.N.O.
RECTANGULAR & SQUARE HSS SHAPES=A.S.T.M. A500 GR. B (Fy=46 K.S.I.)
ROUND HSS SHAPES = A.S.T.M. A500 GR. B (Fy=42 K.S.I.)
PIPE SECTIONS = A.S.T.M. A53, TYPE E OR S, GR. B (Fy=35 K.S.I.)
ANCHOR BOLTS = A.S.T.M. F1554 GR 36 (Fy=36 K.S.I.)
HIGH STRENGTH ANCHOR BOLTS = A.S.T.M. A449 (Fy=105 K.S.I.)
3) ALL SHOP AND FIELD WELDING SHALL CONFORM TO ALL REQUIREMENTS OF THE A.I.S.C. SPECIFICATION IN NOTE #1 AND THE "STRUCTURAL WELDING CODE" (A.W.S. D1.1–2015) OF THE AMERICAN WELDING SOCIETY DATED NOV. 29, 2005 OR LATEST REVISION.
4) ALL WELDING ELECTRODES FOR MANUAL SHIELDED METAL ARC WELDING SHALL CONFORM TO THE E70 SERIES A.W.S. A5.1 OR A5.5.
5) FIELD CONNECTIONS TO BE BOLTED. SHOP CONNECTIONS MAY BE BOLTED OR WELDED – UNLESS NOTED OTHERWISE. CONNECTIONS TO BE SELECTED BY THE FABRICATOR TO DEVELOP THE FULL UNIFORM LOAD CAPACITY OF THE MEMBER OR FORCES SHOWN ON THE PLANS –WHICHEVER IS GREATER. CONNECTIONS OF BEAMS FRAMING INTO BEAMS SHALL BE MADE WITH DOUBLE ANGLE CONNECTIONS OR SINGLE PLATE SHEAR CONNECTIONS.
6) ALL BOLTED CONNECTIONS SHALL TO BE SHEAR/BEARING TYPE WITH A MINIMUM OF TWO (2) BOLTS. ALL WELDS SHALL HAVE MINIMUM CAPACITY OF 6,000 POUNDS.
7) ALL BOLTS SHALL BE ¾" IN. DIA. A.S.T.M. A–325–N HIGH–STRENGTH BOLTS WITH NUTS AND WASHERS (U.N.O.). BOLTS SHALL BE TIGHTENED ONLY TO "SNUG TIGHT" CONDITION (TYP. U.N.O.).
8) STRUCTURAL STEEL FABRICATOR SHALL FURNISH CERTIFIED MILL TEST REPORTS OF ALL STEEL ITEMS USED.
9) DENOTES FIELD WELD
10) STEEL IS TO BE CLEANED TO AN SSPC–SP2 HAND–TOOL CLEAN AND PAINTED WITH ONE PRIME COAT OF SHERWIN WILLIAMS STRUCTURAL STEEL PRIMER OR EQUAL. ALL PARTS INACCESSIBLE AFTER ERECTION TO HAVE TWO (2) COATS OF PAINT. TOUCH UP AFTER ERECTION.
SPECIAL REQUIREMENTS:
a) COORDINATE PRIMER REQUIREMENTS FOR STEEL THAT IS TO RECEIVE SPECIAL ARCHITECTURAL PAINT AND/OR EPOXY FINISHES.
b) STEEL THAT WILL BE EXPOSED TO WEATHER IN FINISHED STRUCTURE SHALL BE HOT–DIP GALVANIZED AFTER FABRICATION.
c) STEEL EXPOSED TO EARTH SHALL BE COATED WITH SONNEBORN HYDROCIDE SEMI–MASTIC DAMPPROOFING OR APPROVED EQUAL.
d) STEEL TO BE ENCASED IN CONCRETE OR SPRAY–ON FIREPROOFING, NO PAINT.
e) AT SLIP CRITICAL CONNECTIONS AND AREAS TO BE WELDED, NO PAINT.
11) STEEL FABRICATOR TO SUPPLY ALL CLIPS, FASTENERS, AND ANCHOR BOLT ASSEMBLIES.
12) THE ERECTOR SHALL MAINTAIN ADEQUATE TEMPORARY BRACING PER THE LATEST O.S.H.A. SUBPART R ERECTION REQUIREMENTS UNTIL THE DIAPHRAGM AND LATERAL BRACING SYSTEM IS COMPLETE.
13) SUPPLY ALL HOLES REQUIRED BY OTHER TRADES FOR ALL OPENINGS NOT OTHERWISE PROVIDED FOR. FABRICATOR TO SUPPLY LINTELS AS FOLLOWS WITH (1) 3½" HORIZONTAL LEG PER EACH 4" OF MASONRY:

CLEAR SPAN	SIZE	BRG. EACH END
UP TO 3'-0"	3½ X 3½ X 5/16"	4"
3'-1" TO 5'-0"	4 X 3½ X 5/16"	6"
5'-1" TO 8'-0"	5 X 3½ X 5/16"	8"

CONTACT THE PROJECT STRUCTURAL ENGINEER FOR OPENINGS EXCEEDING 8'-0".
ANGLES THAT WILL BE EXPOSED TO WEATHER IN FINISHED STRUCTURE SHALL BE HOT–DIP GALVANIZED AFTER FABRICATION.
21) GROUT UNDER BEARING PLATES SHALL BE NON–SHRINKING TYPE MEETING ALL REQUIREMENTS OF CRD–C621, CORPS OF ENGINEERS SPECIFICATION FOR NON–SHRINK GROUT OR MEETING ALL REQUIREMENTS OF A.S.T.M. C1107 FOR FLUID CONSISTENCY, 30 MINUTE WORKING TIME AND TEMPERATURE RANGE FROM 45°F TO 90°F.

STEEL JOIST NOTES:

1) ALL DESIGN, DETAILS, FABRICATION, AND ERECTION SHALL MEET STANDARD SPECIFICATION FOR OPEN WEB STEEL JOIST LATEST EDITION. SPACING OF JOISTS AND BRIDGING SHALL BE AS SHOWN ON PLANS AND SHALL MEET LATEST S.J.I. SPECIFICATIONS.
2) ALL JOISTS TO BE WELDED TO SUPPORTING STEEL WITH 1 IN. OF ⅜ IN. FILLET WELD ON EACH SIDE OF EACH BEARING.
3) SHOP DRAWINGS SHALL INDICATE SIZE, LENGTH, LOCATIONS, SPACING, PAINT, AND END DETAILS OF ALL JOISTS. JOIST FABRICATOR SHALL FURNISH SIZE OF ALL MEMBERS, PANEL DIMENSIONS, AND OTHER DETAILS UPON REQUEST.
4) AT OR NEAR COLUMN JOISTS:
STEEL JOIST INSTITUTE TESTING IS INCOMPLETE FOR AT OR NEAR COLUMN OSHA JOISTS REGARDING THE DESIGN METHODS NEEDED TO SAFELY SUPPORT AN EMPLOYEE WITHOUT THE NEED FOR ERECTION BRIDGING. [REF. OSHA 1926.757(a)(3)]
THESE JOISTS MUST BE ERECTED BY EITHER:
a) INSTALLING BRIDGING OR OTHERWISE STABILIZING THE JOIST PRIOR TO RELEASING THE HOIST CABLE, OR
b) RELEASING THE HOISTING CABLE WITHOUT HAVING A WORKER ON THE JOIST
5) ALL JOISTS AND BRIDGING TO PRIME PAINTED WITH MANUFACTURER'S STANDARD PRIMER

STEEL ROOF DECK NOTES:

1) ALL ROOF DECK SHALL BE 22 GA. TYPE 1.5B ROOF DECK WITH G90 GALVANIZED FINISH AS MANUFACTURED BY "VULCRAFT" (A DIVISION OF NUCOR CORP.) OR ENGINEER APPROVED EQUAL. S.J.I. SPECIFICATIONS

FABRICATION=DTP SO–10063 REF. SO–9536

PROJECT NAME:

FRESH MARK

MICROWAVE LINE ADDITION

1888 SOUTHWAY ST SE MASSILLON, OHIO 44646

CONSTRUCTION MANAGER:
JOSEPH A. JEFFRIES
DARRELL MOONEY
5211 LOUISVILLE ST NE
LOUISVILLE, OH 44614
330–454–6103

CONSULTANTS:

STRUCTURAL

STATE OF OHIO DAVID F. LAWLESS 51885 REGISTERED PROFESSIONAL ENGINEER

David F. Lawless
12-9-19

MILESTONES & REVISIONS

REV.	DATE	DESCRIPTION
1	12-23-19	FOR CUSTOMER REVIEW
0	12-9-19	FOR PLAN APPROVAL

DDMG

DOVER DESIGN & MANAGEMENT GROUP, LLC
CONSULTING ENGINEERS • STRUCTURAL DESIGN • PROJECT MANAGEMENT
5725 CROWN RD, NW
DOVER, OH 44622
PH: 330-343-4443
FAX: 330-364-3125

DRAWN BY: JULIA
CHECKED BY: DL

SHEET TITLE

FRAMING PLAN & ELEVATIONS

PROJECT NO. 10055

CONSULTANT PROJECT NO. #XXXX

SHEET NO. S1

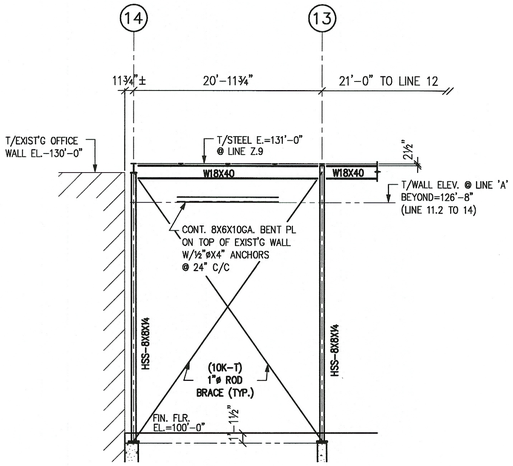

PARTIAL ELEV. @ LINE Z.9

1/8"=1'-0"

(LOOKING NORTH)

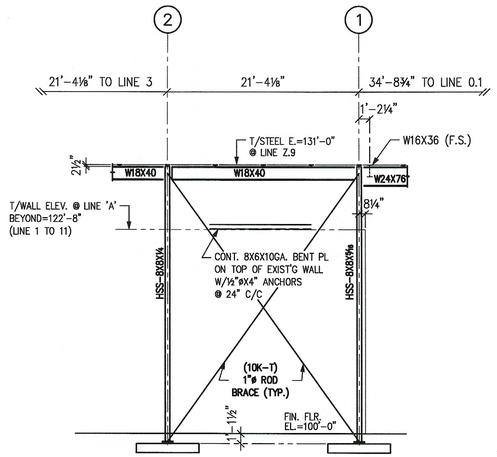

PARTIAL ELEV. @ LINE Z.9

1/8"=1'-0"

(LOOKING NORTH)

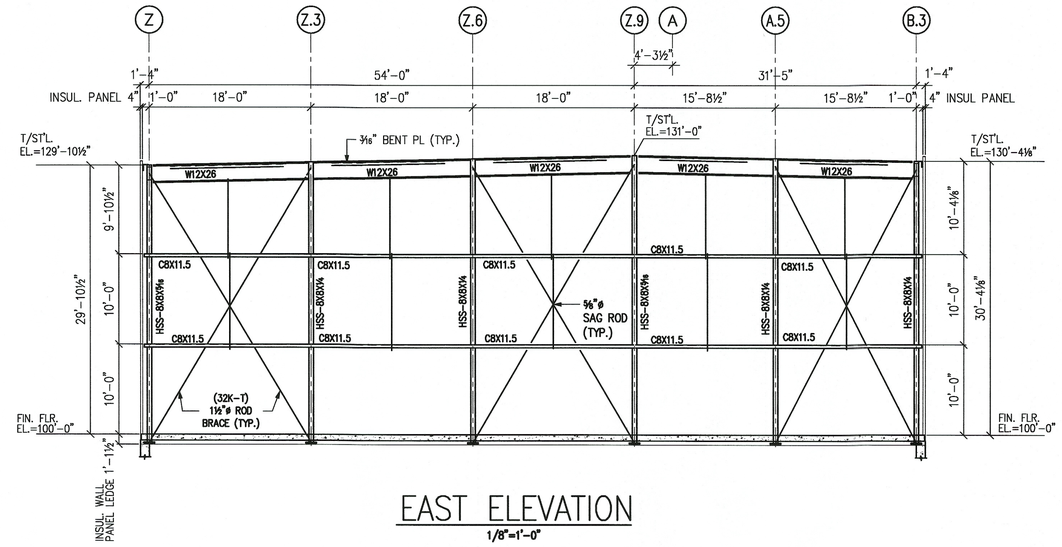

EAST ELEVATION

1/8"=1'-0"

(LOOKING WEST)

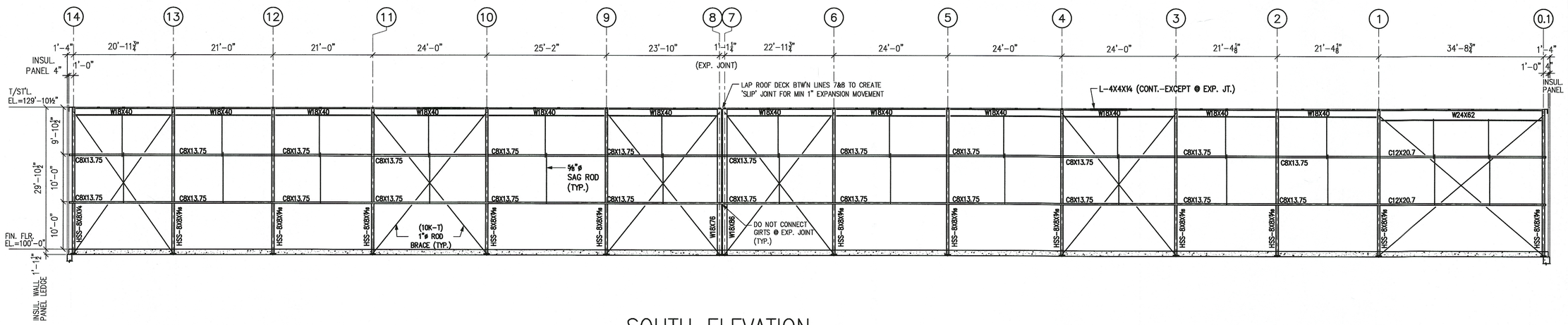

SOUTH ELEVATION

3/32"=1'-0"

(LOOKING NORTH)

REF. SO-9536

PROJECT NAME:

FRESH MARK

MICROWAVE LINE ADDITION

1888 SOUTHWAY ST SE MASSILLON, OHIO 44646

CONSTRUCTION MANAGER:

JOSEPH A. JEFFRIES
DARRELL MOONEY
5211 LOUISVILLE ST NE
LOUISVILLE, OH 44614
330-454-6103

CONSULTANTS:

STRUCTURAL

STATE OF OHIO DAVID F. LAWLESS 51888 REGISTERED PROFESSIONAL ENGINEER

David F. Lawless
12-9-19

MILESTONES & REVISIONS

REV.	DATE	DESCRIPTION
1	12-23-19	FOR CUSTOMER REVIEW
2	12-9-19	FOR PLAN APPROVAL

DDMG

DOVER DESIGN & MANAGEMENT GROUP, LLC

CONSULTING ENGINEERS • STRUCTURAL DESIGN • PROJECT MANAGEMENT

5725 CROWN RD. NW
DOVER, OH 44622

PH: 330-343-4443
FAX: 330-364-3125

DRAWN BY	CHECKED BY
JULIA	DL

SHEET TITLE

BUILDING ELEVATIONS

PROJECT NO.

10055

CONSULTANT PROJECT NO.	SHEET NO.
#XXXX	S2