THIS DRAWING AND THE INFORMATION AND DATE CONTAINED HEREIN ARE THE CONFIDENTIAL AND PROPRIETARY PROPERTY OF DUKE MANUFACTURING CO., AND MAY NOT BE REPRODUCED OR DISCLOSED FOR ANY PURPOSE, WITHOUT THE WRITTEN PERMISSION OF DUKE MANUFACTURING CO.

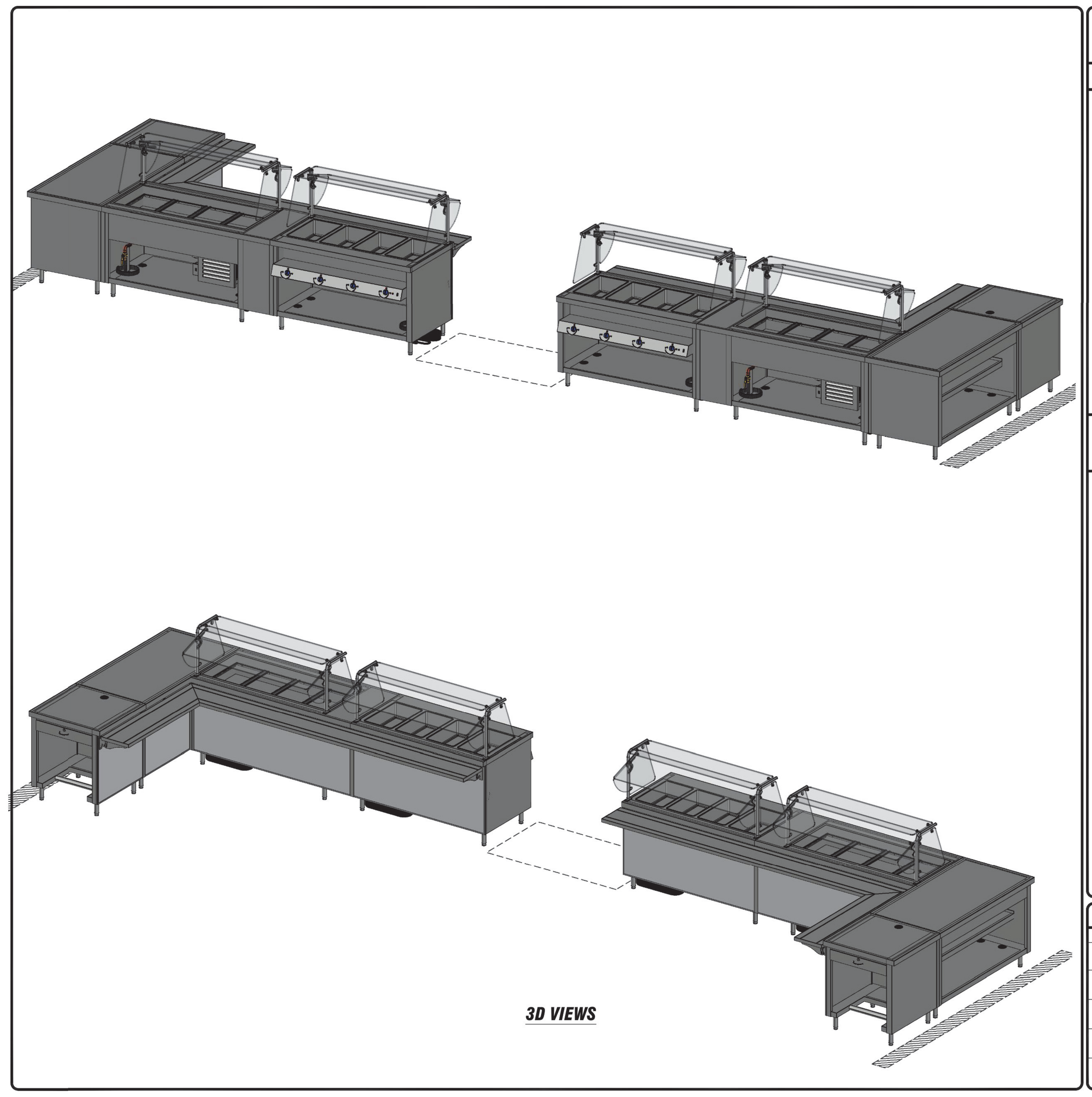

3D VIEWS

STANDARD SERVING SYSTEM PRACTICES

SOLID SURFACE TOPS AND TRAY SLIDES
- ALL SOLID SURFACE TOPS AND TRAY SLIDES, WITH FIELD SEAMS, ***WILL SHIP LOOSE***, WHEN SPANNING MORE THAN ONE UNIT.
- SOLID SURFACE TOPS AND TRAY SLIDES SPECIFIC TO SINGLE UNIT WILL SHIP INSTALLED.
- SOLID SURFACE TOPS AND TRAY SLIDES REQUIRE A ***CERTIFIED*** INSTALLER, SPECIFIC TO THE BRAND, TO SEAM THE UNITS IN THE FIELD DURING PRODUCT INSTALLATION.

STAINLESS STEEL TOPS AND TRAY SLIDES
- THE MAXIMUM CONTINUOUS STAINLESS STEEL TOP LENGTH IS 144" [12'-0"], BEFORE REQUIRING A BOLTED OR WELDED FIELD JOINT.
- THE MAXIMUM CONTINUOUS STAINLESS STEEL TRAY SLIDE LENGTH IS 144" [12'-0"], BEFORE REQUIRING A BOLTED OR WELDED FIELD JOINT.
- BOLTED OR WELDED FIELD JOINTS ARE REQUIRED, AT ALL MITERED TRAY SLIDE CORNERS.

ALLOWANCE FOR FIELD CONDITIONS
- FACTORY TO ALLOW ¼" AT ALL WALLS, COLUMNS, AND PASS THROUGH WINDOWS FOR FIT. ***(SEE WALL TO WALL AND COLUMN EXAMPLES)***

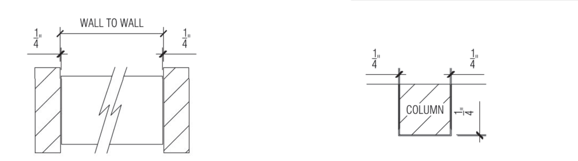

WALL TO WALL EXAMPLE

COLUMN EXAMPLE

ELECTRICAL
- ALL 15 AMP (NEMA #5-15R) AND 20 AMP (NEMA #5-20R) RECEPTACLES SHALL BE GFCI (GROUND FAULT CIRCUIT INTERRUPTER) TYPE RECEPTACLES PER DUKE MANUFACTURING STANDARD. ***UNLESS SPECIFICALLY NOTED OTHERWISE*** ON THE DRAWING. ***(SEE SYMBOL LEGEND)***

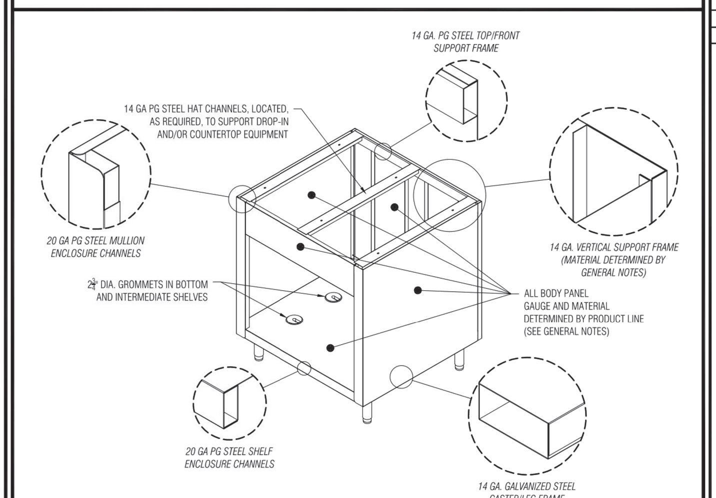

STANDARD CHANNEL BODY CONSTRUCTION

SYMBOL LEGEND

DESCRIPTION	SYMBOL	DESCRIPTION	SYMBOL	DESCRIPTION	SYMBOL
SIMPLEX RECEPTACLE		DUPLEX GFCI RECEPTACLE (NEMA 5-15R & 5-20R ONLY)		ELEC. CORD AND PLUG	
KICKPLATE LOCATION	K	LAMINATE LOCATION	L	DECOR PANEL LOCATION	DP
EQUIPMENT TAG	#	FIELD JOINT LOCATION	FJ	2½" GROMMET LOCATION	
VIEW TAG	VIEW NUMBER / PAGE NUMBER / PLAN / SCALE / VIEW NAME / VIEW SCALE			COMPRESSOR WITH REMOVABLE GRILLE	
VIEW ARROWS	VIEW NUMBER / PAGE NUMBER				

GENERAL NOTES

THIS DRAWING AND THE INFORMATION AND DATE CONTAINED HEREIN ARE THE CONFIDENTIAL AND PROPRIETARY PROPERTY OF DUKE MANUFACTURING CO., AND MAY NOT BE REPRODUCED OR DISCLOSED FOR ANY PURPOSE, WITHOUT THE WRITTEN PERMISSION OF DUKE MANUFACTURING CO.

THE FOLLOWING MUST BE VERIFIED PRIOR TO CONSTRUCTION
- ANY DECOR COLOR CHOICES INCLUDING LAMINATE, PAINT COLOR, OR CUSTOM DECOR FEATURES, IF APPLICABLE
- ALL ELECTRICAL VOLTAGE AND PHASE OF DUKE HOT FOOD UNITS AND BUYOUT EQUIPMENT IF APPLICABLE
- ALL CRITICAL FIELD DIMENSION IF ANY AS INDICATED IN PLAN VIEW.

THURMADUKE SERVING SYSTEMS

TOPS
16 GA. STAINLESS STEEL TOP W/ T-TRIM & BODY PILASTERS.

BODIES & INTERIORS
14 GA. FRAME/SUPPORTS W/20 GA. STAINLESS STEEL ENCLOSURE CHANNELS, BODY PANELS AND INTERIOR SHELVES W/ LAMINATE VENEER EXTERIOR WHERE INDICATED.

***** LAMINATE GRAIN (IF ANY) RUNS HORIZONTAL *****

*LAMINATE BRAND:.............. VERIFY

*LAMINATE COLOR NAME:..... VERIFY

*LAMINATE ID NUMBER:....... VERIFY

LEGS
6" HIGH, 1 5/8"Ø STAINLESS STEEL TUBULAR LEGS WITH ADJUSTABLE FEET.

TRAYSLIDES
16 GA. STAINLESS STEEL SOLID TRAY SLIDES WITH (2) DIE FORMED RUBBING TRACKS ON 10 GA. STAINLESS STEEL FIXED BRACKETS.

CONTINUOUS STYLE TRAYSLIDE

HOT FOOD DRAINS
DRAINS MANIFOLDED w/ COPPER TUBING TO BRASS MASTER VALVE. EXTEND MASTER VALVE FORWARD. TO INCLUDE HOSE BIB CONNECTION & 48" OF ½" DIA. HOSE.

COLD FOOD DRAINS
DRAIN EXTENSION TO GLOBE VALVE W/ HOSE BIB CONNECTION & 48" OF ½" DIA. HOSE

NSF-7 COLD PAN UNITS
NSF STANDARD #7 COLD PAN TO HOLD FOOD PANS RECESSED 3" BELOW TOP ON S.S. REMOVABLE BRACKETS & ADAPTER BARS

BREATHGUARDS (TS-400 SERIES)
1" DIA. STAINLESS STEEL TUBING LEGS. CLEAR GLASS SHELVES, PROTECTORS & END ENCLOSURES.

BREATH GUARD POSTS ARE NOT TO BE USED AS PUSH HANDLES. DUKE MANUFACTURING DOES NOT ACCEPT RESPONSIBILITY FOR FOOD SHIELDS COMING LOSE IN THE FIELD DUE TO MISUSE.

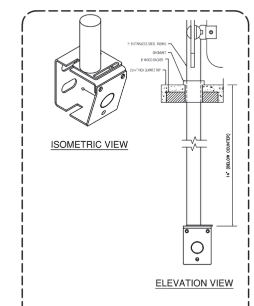

THRU-TOP BREATHGUARD MOUNT DETAILS

DUKE EQUIPMENT

Item Tag	Quantity	Model Number	Description	Voltage	Phase	Watts	Amps	NEMA #'S Intl. Conn. / Final Conn.	Cord length	
61	1	TCS-30SS	CASHIER'S UNIT	-	-	-	-	NEMA# / -	Cord / -	Gas Type / -
62	1	TST-60SS	SOLID TOP UNIT	-	-	-	-	NEMA# / -	Cord / -	Gas Type / -
63	1	TCM-60SS-N7	4-SECTION NSF-7 COLD PAN UNIT 8" MECHANICALLY COOLED	120	1	813.6	6.78	NEMA# / 5-15P	Cord / 8'	Gas Type / -
63a	1	TS422-60	CONTEMPORARY FOOD SHIELD FULL-SERVICE TO SELF-SERVICE	-	-	-	-	NEMA# / -	Cord / -	Gas Type / -
64	1	TEHF-60SS	HOT FOOD UNIT SEALED WELLS W/ DRAINS	208	1	3600	17.3	NEMA# / L6-30P	Cord / 8'	Gas Type / -
64a	1	TS422-60	CONTEMPORARY FOOD SHIELD FULL-SERVICE TO SELF-SERVICE	-	-	-	-	NEMA# / -	Cord / -	Gas Type / -
65	1	CUSTOM	TRAYSLIDE CONTINUOUS ON ITEMS# (61,62,63,64)	-	-	-	-	NEMA# / -	Cord / -	Gas Type / -
68	1	CUSTOM	TRAYSLIDE CONTINUOUS ON ITEMS# (69,70,71,72)	-	-	-	-	NEMA# / -	Cord / -	Gas Type / -
69	1	TEHF-60SS	HOT FOOD UNIT SEALED WELLS W/ DRAINS	208	1	3600	17.3	NEMA# / L6-30P	Cord / 8'	Gas Type / -
69a	1	TS422-60	CONTEMPORARY FOOD SHIELD FULL-SERVICE TO SELF-SERVICE	-	-	-	-	NEMA# / -	Cord / -	Gas Type / -
70	1	TCM-60SS-N7	4-SECTION NSF-7 COLD PAN UNIT 8" MECHANICALLY COOLED	120	1	813.6	6.78	NEMA# / 5-15P	Cord / 8'	Gas Type / -
70a	1	TS422-60	CONTEMPORARY FOOD SHIELD FULL-SERVICE TO SELF-SERVICE	-	-	-	-	NEMA# / -	Cord / -	Gas Type / -
71	1	TST-60SS	SOLID TOP UNIT	-	-	-	-	NEMA# / -	Cord / -	Gas Type / -
72	1	TCS-30SS	CASHIER'S UNIT	-	-	-	-	NEMA# / -	Cord / -	Gas Type / -

DUKE EQUIPMENT

Item Tag	Quantity	Model Number	Description	Voltage	Phase	Watts	Amps	NEMA #'s Intl. Conn. / Final Conn.	Cord Length

BUY-OUT EQUIPMENT

Item Tag	Quantity	Model Number	Description	Voltage	Phase	Watts	Amps

PRELIMINARY DRAWING: NOT FOR APPROVAL

NOTE: SNEEZE GUARDS NOT SHOWN IN PLAN VIEW

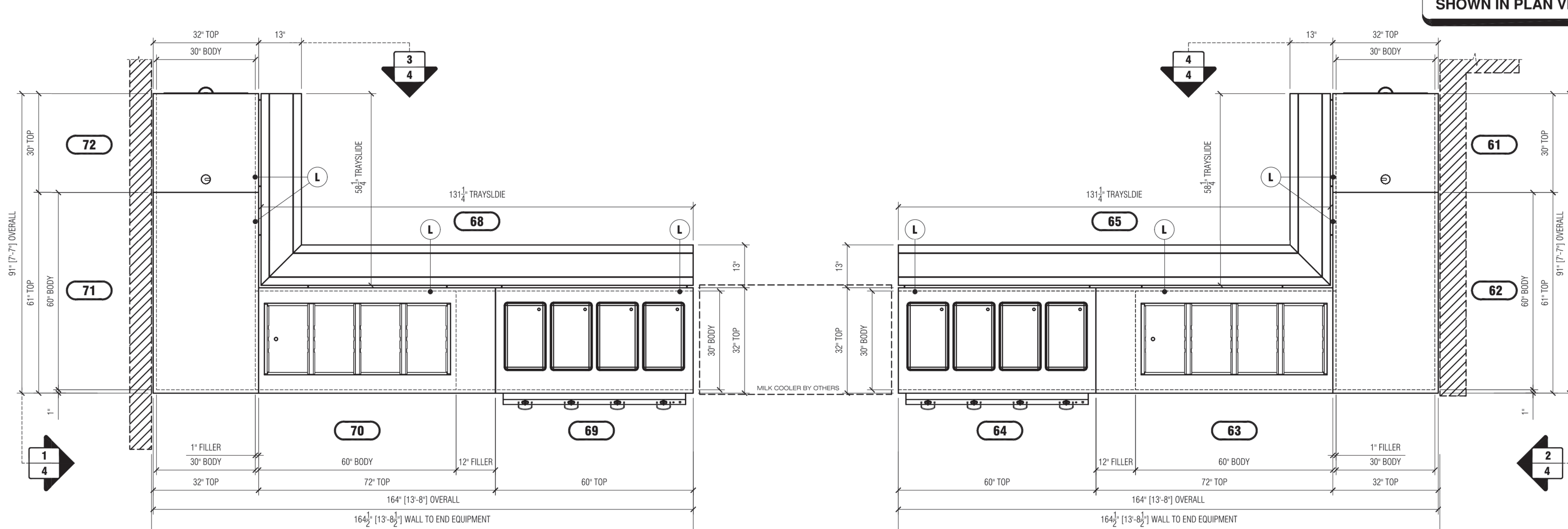

1 PLAN VIEW
3 3/8" = 1'-0"

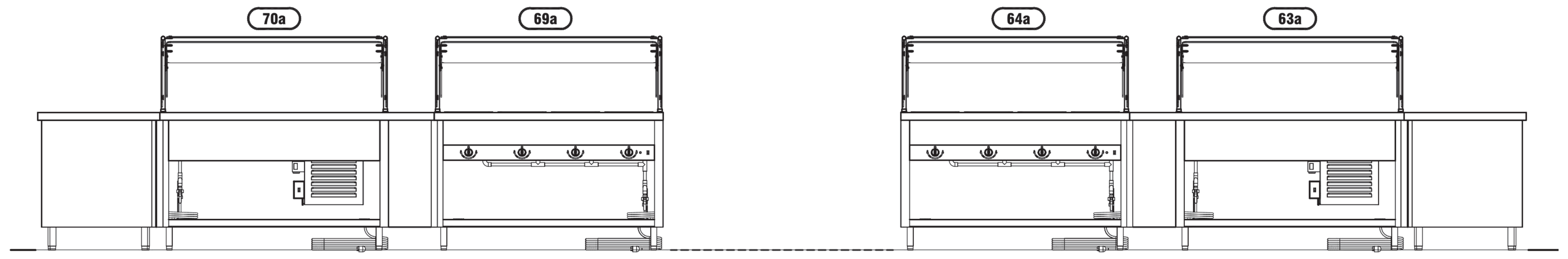

2 ELEVATION VIEW
3 3/8" = 1'-0"

PRELIMINARY DRAWING: NOT FOR APPROVAL

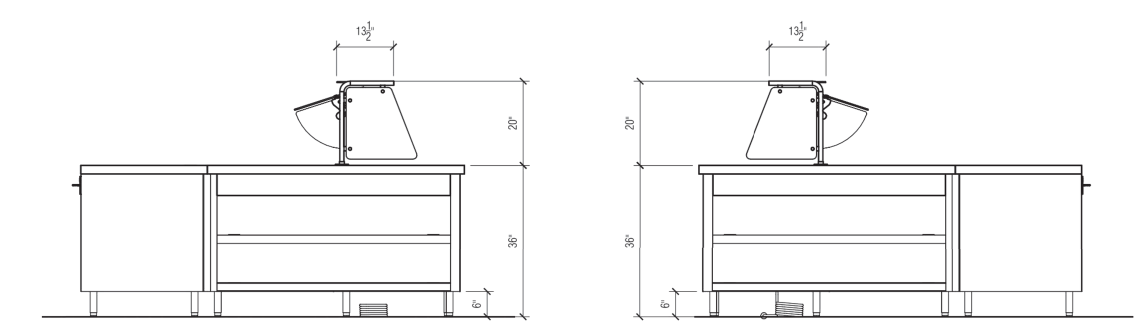

1 ELEVATION VIEW
4 3/8" = 1'-0"

2 ELEVATION VIEW
4 3/8" = 1'-0"

3 END VIEW
4 3/8" = 1'-0"

4 END VIEW
4 3/8" = 1'-0"

Duke — Your Solutions Partner
DUKE MANUFACTURING COMPANY
2305 North Broadway
St. Louis, MO 63102
Ph (314) 231-1130
Fax (314) 231-5074

PRELIMINARY

ALL DRAWINGS, SPECIFICATIONS, AND COPIES THEREOF FURNISHED BY DUKE MANUFACTURING ARE ITS PROPERTY. THE DRAWINGS, SPECIFICATIONS, AND COPIES ARE NOT TO BE USED ON ANY OTHER WORK, AND ARE TO BE RETURNED TO DUKE MANUFACTURING ON REQUEST, AT COMPLETION OF THE WORK.

REV.	DATE	BY

DESIGNED FOR: MASSILLON EAST ELEMENTARY SCHOOL
DESIGNED BY:
DRAWN BY: GMC
ESTIMATOR: R. TROUTT
PURCHASE ORDER #:
SALES ORDER: N/A
DATE: 05/01/2023
DRAWING NO.: SD-145222
SHEET: 1 / 2 / 3 / 4 OF: 4

Breckenridge
Kitchen Equipment & Design
2401 Sawmill Parkway, Suite 7 Huron, OH 44839
(419) 433-5915
(419) 433-6616 Fax

PROJECT NO
2203-2

ARCHITECTURAL VISION GROUP, LTD
ARCHITECTS • PLANNERS
23850 SPERRY DRIVE CLEVELAND, OHIO 44145

PROFESSIONAL SEAL:

CONSULTANT:

MASSILON CITY SCHOOL
EAST SIDE CAMPUS
1 Paul E Brown Dr SE Massillon, OH 44646

MARK	DATE	DESRIPTION
	7/12/2023	100% Permit / Bid Set
••	3/17/2023	Design Development

ISSUED AS:

PROJECT NO	••••••••••••
DRAWN BY	••
CHECKED BY	••
DATE	-

SERVING COUNTER DETAILS

SHEET NO
FS-07