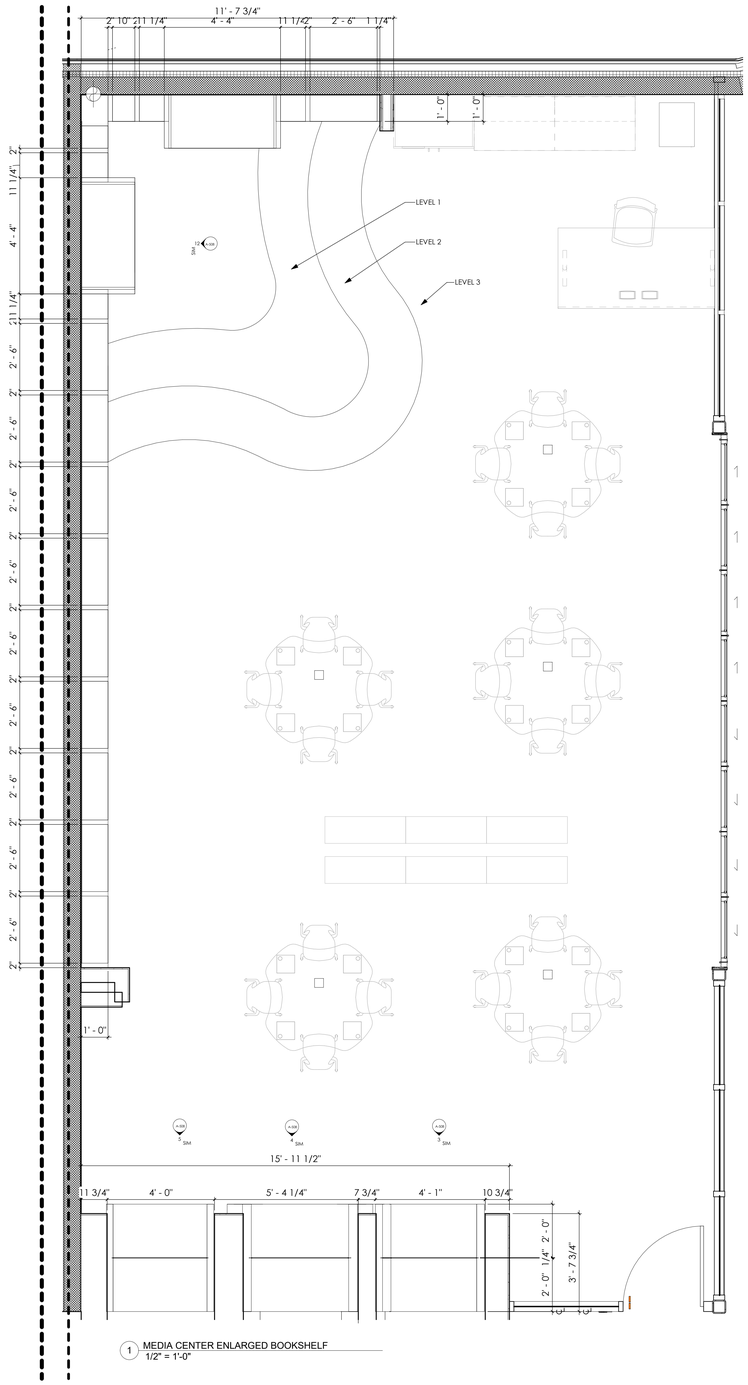

1 MEDIA CENTER ENLARGED BOOKSHELF
1/2" = 1'-0"

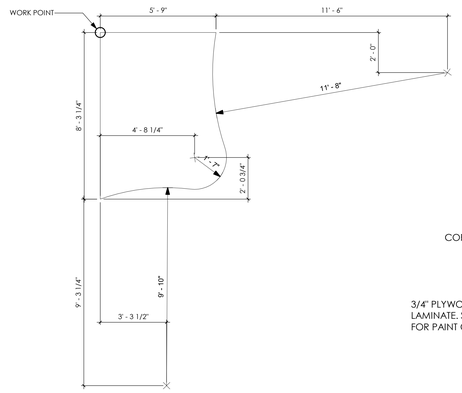

9 TIERED STEP LEVEL 1
3/8" = 1'-0"

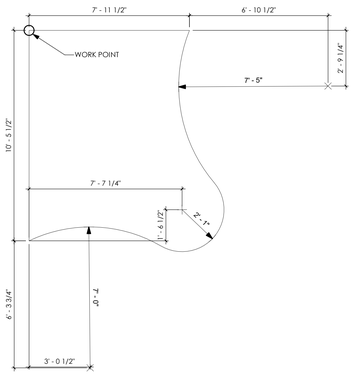

10 TIERED STEP LEVEL 2
3/8" = 1'-0"

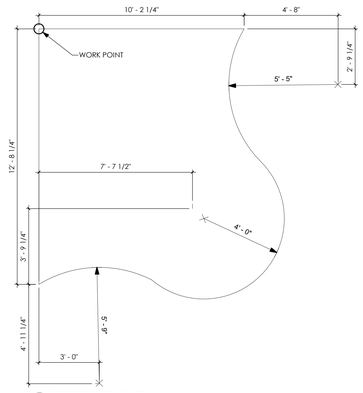

11 TIERED STEP LEVEL 3
3/8" = 1'-0"

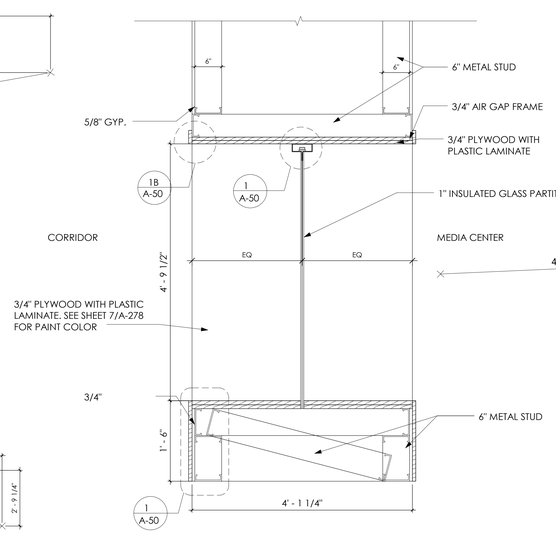

2 READING NOOK DETAIL
1" = 1'-0"

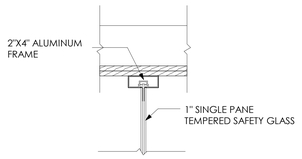

6 1A READING NOOK DETAIL
1 1/2" = 1'-0"

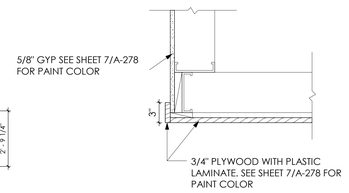

7 1B READING NOOK DETAIL
1 1/2" = 1'-0"

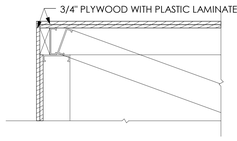

8 1C READING NOOK DETAIL
1" = 1'-0"

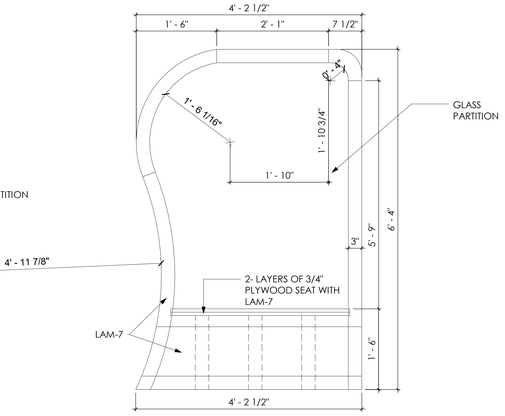

3 READING NOOK DETAIL
1" = 1'-0"

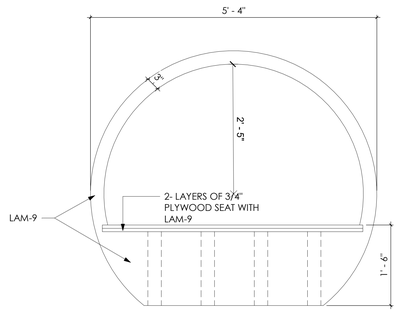

4 READING NOOK DETAIL
1" = 1'-0"

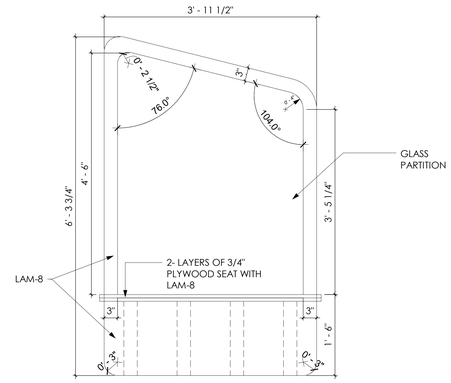

5 READING NOOK DETAIL
1" = 1'-0"

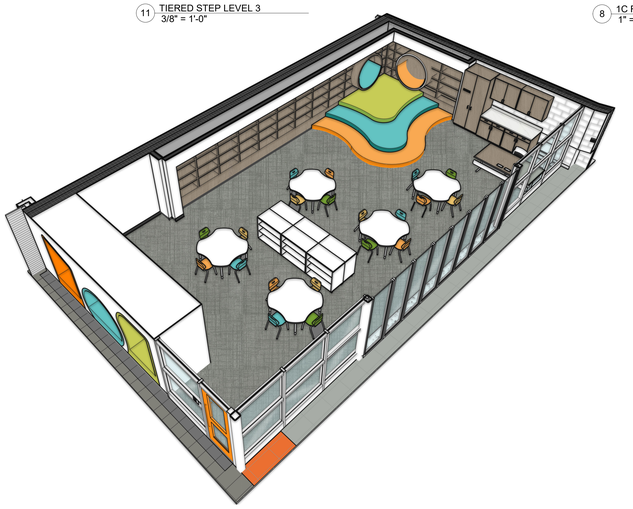

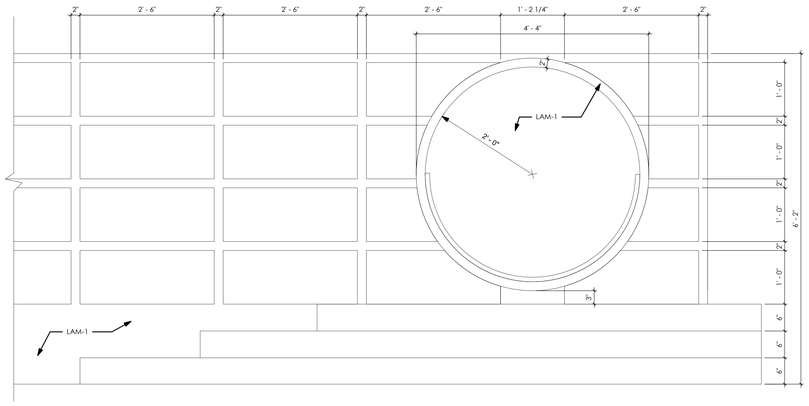

12 READING NOOK DETAIL
1" = 1'-0"

PROJECT NO
2203-1

ARCHITECTURAL VISION GROUP, LTD
ARCHITECTS ◦ PLANNERS
23850 SPERRY DRIVE CLEVELAND, OHIO 44145

PROFESSIONAL SEAL:
SYED S. ABBAS
STATE OF OHIO
SYED ABBAS, LICENSE #ARC-9193276
EXPIRATION DATE 12/31/2023

CONSULTANT:

MASSILLON CITY SCHOOL
MASSILLON WEST ELEMENTARY
PK-3
250 29TH STREET NW, MASSILLON, OHIO 44646
MASSILLON CITY SCHOOL DISTRICT MASSILLON, OHIO

MARK	DATE	DESCRIPTION
	7-12-23	100% BID FORMATE SET

ISSUED AS:

PROJECT NO	2203-1
DRAWN BY	Author
CHECKED BY	Checker
DATE	

MEDIA CENTER ENLARGED DETAILS

SCALE: As indicated

SHEET NO
A-508