Kathy Catazaro-Perry, Mayor

Massillon City of Champions

ITEM 604 CATCH BASIN MASSV-5630

City of Massillon
Stark County, Ohio

DRAWING NAME: _____.DWG
CITY NUMBER: 13st01

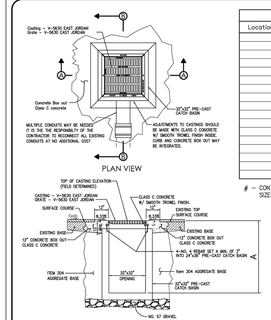

PLAN VIEW

ITEM 604 CATCH BASIN MASSV-5630				
Location Description	Removed	Side	A	Conduits
	____	____		____
	____	____		____
	____	____		____
	____	____		____
	____	____		____
	____	____		____
	____	____		____
	____	____		____
	____	____		____
	____	____		____
	____	____		____
	____	____		____
	____	____		____
	____	____		____
	____	____		____
	____	____		____
	____	____		____
	____	____		____
	____	____		____
	____	____		____
	____	____		____

– CONTRACTOR'S RESPONSIBILITY TO LOCATE ALL CONDUIT LOCATIONS, SIZES, AND DEPTHS.

SECTION A-A

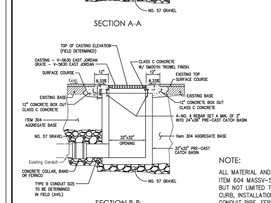

SECTION B-B

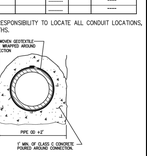

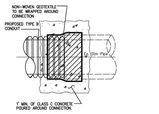

CONCRETE COLLAR

NOTE:

ALL MATERIAL AND LABOR TO PERFORM THE PROPER INSTALLATION OF TYPE ITEM 604 MASSV-5630 SHALL BE INCLUDED IN THE UNIT PRICE BID. THIS INCLUDES BUT NOT LIMITED TO THE REMOVAL OF EXISTING STRUCTURES, CONDUIT, ROADWAY, CURB, INSTALLATION OF 57 GRAVEL, ITEM 304 AGGREGATE BASE, JOINT SEALER CONDUIT PIPE, FERNCO, CLASS C CONCRETE, CONCRETE COLLAR, AND CURBING.

Kathy Catazaro-Perry, Mayor

Massillon City of Champions

CITY OF MASSILLON ENGINEERING
151 LINCOLN WAY EAST
MASSILLON, OHIO (330)830-1722
FAX: (330)830-1786

STANDARD DROP MANHOLE

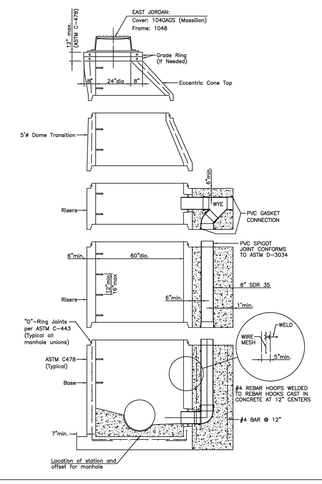

Kathy Catazaro-Perry, Mayor

Massillon City of Champions

CITY OF MASSILLON ENGINEERING
151 LINCOLN WAY EAST
MASSILLON, OHIO (330)830-1722
FAX: (330)830-1786

TRENCH DETAIL OUTSIDE ROADWAY

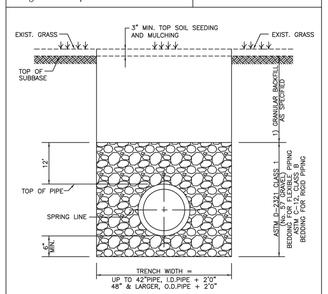

NOTES

1) EXCAVATED MATERIAL MAY BE USED IF FOUND TO BE IN ACCEPTABLE CONDITION AS DETERMINED BY THE CITY ENGINEER.

Kathy Catazaro-Perry, Mayor

Massillon City of Champions

CITY OF MASSILLON ENGINEERING
151 LINCOLN WAY EAST
MASSILLON, OHIO (330)830-1722
FAX: (330)830-1786

TRENCH DETAIL WITHIN ROADWAY/DRIVEWAY

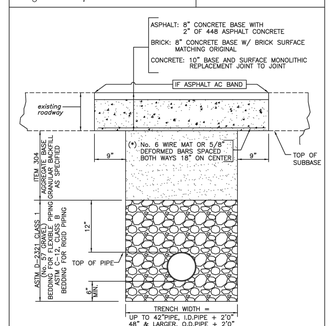

NOTES

1) CONCRETE BASE SHALL BE OF 1:2:4, 6 BAG MIX, PORTLAND CEMENT CONCRETE USING HIGH EARLY STRENGTH CEMENT AND IT MUST BE CURED AT LEAST 48 HRS.

(*) MUST BE USED WHEN WIDTH OF TRENCH IS GREATER THAN 3' AT THE SUBBASE. FIBER CONCRETE BASE MAY BE USED IN LIEU OF THE BARS.

1040A COVER

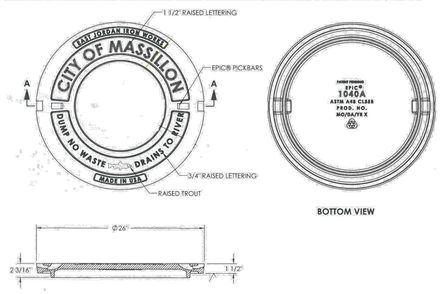

SECTION A-A

PRODUCT NUMBER
00103723

DESIGN FEATURES
MATERIALS
COVER–GRAY IRON
ASTM A48 CL35B
DESIGN LOAD
HEAVY DUTY
COATING
DIPPED
OPEN AREA
N/A
√ DESIGNATES MACHINE SURFACE

Corporate Headquarters
301 Spring Street
PO Box 439
East Jordan, MI
49727-0439
800.626.4100

Call Today for More Information | 800.626.4653 | EJIW EAST JORDAN IRON WORKS ACCESS YOUR INFRASTRUCTURE | www.ejiw.com MADE IN THE USA

*Weights (lbs./kg.), dimensions (inches/mm), and drawings provided for your guidance.
EJIW reserves the right to modify specifications without prior notice.
**Decorative distribution

CONFIDENTIAL: This drawing is the property of East Jordan Iron works, Inc., and embodies confidential information, registered mark, trade secret information, and/or know how that is the property of East Jordan Iron Works, Inc. ©Copyright 2009 East Jordan Iron Works, Inc.

DRAWING DETAILS

ORIGINAL DRAWING:	JLJ	3/26/2010
REVISED BY:	DEF	4/13/2010

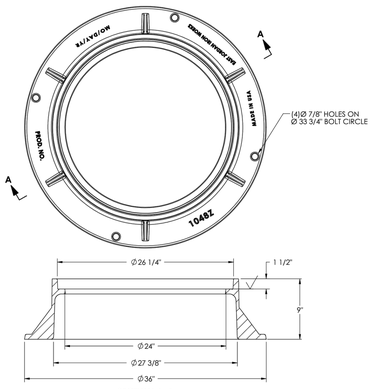

SECTION A-A

CONFIDENTIAL: This drawing is the property of East Jordan Iron Works, Inc. and embodies confidential information, trade secret information, and/or know how that is the property of East Jordan Iron Works, Inc.©Copyright 2009 East Jordan Iron Works, Inc.

EJIW EAST JORDAN IRON WORKS
800-626-4653
www.ejiw.com
MADE IN USA

PRODUCT NUMBER	00104810
CATALOG NUMBER	1048Z
FRAME	
LOAD RATING	HEAVY DUTY
COATING	DIPPED
SPECIFICATION	FRAME-GRAY IRON ASTM A48 CL35B
ESTIMATED WEIGHT	224 LBS.
OPEN AREA	N/A
√ DESIGNATES MACHINED SURFACE	
DRAWN DVDS-VP	DATE 7/14/2009
LAST REVISED DEW	DATE 8/6/2009

– PLAN PREPARED BY –

LEWIS LAND PROFESSIONALS INC.

LEWIS LAND PROFESSIONALS
CIVIL ENGINEERING LAND SURVEYING
8691 WADSWORTH ROAD SUITE 100
WADSWORTH, OH 44281 (330) 335-8232

OHIO811.org Before You Dig

22-071_UTILITY DETAILS.DWG

PROJECT NO
2203-1

ARCHITECTURAL VISION GROUP, LTD
ARCHITECTS • PLANNERS
23850 SPERRY DRIVE CLEVELAND, OHIO 44145

PROFESSIONAL SEAL:

CONSULTANT:
LEWIS LAND PROFESSIONALS
Civil Engineering & Land Surveying
8691 WADSWORTH ROAD
SUITE 100
WADSWORTH, OH 44281
PH (330) 335-8232
FX (330) 335-0242
WWW.LANDPROFESSIONALS.COM

MASSILON CITY SCHOOL WEST SIDE CAMPUS

250 29th St NW, Massillon, OH 44647

MARK	DATE	DESCRIPTION
1	06-07-23	BULLETIN 2
2	05-03-23	BULLETIN 1
3	04-24-23	ADDENDUM 1
4	03-30-23	PLAN REVIEW & ESP
5	09-14-22	ISSUED AS GMP/ SITE PACKAGE

PROJECT NO	2203-1
DRAWN BY	
CHECKED BY	
DATE	09.14.2022

CITY OF MASSILLON DETAILS

SCALE: 1" = 40'

SHEET NO
BULLETIN 2
C-902