E:\E11004 - Massillon Plant Operations Assistance\AERATION RECYCLE\C01 TITLE SHEET.dwg

WWTP IMPROVEMENTS
AERATION TANK RECYCLE

CITY OF MASSILLON
STARK COUNTY, STATE OF OHIO
FEBRUARY 16, 2011

INDEX OF SHEETS

CIVIL

TITLE SHEET 1
SYMBOLS AND ABBREVIATIONS 2
PLAN AND PROFILE 3

PROCESS

PLAN, SECTIONS, AND DETAILS 4

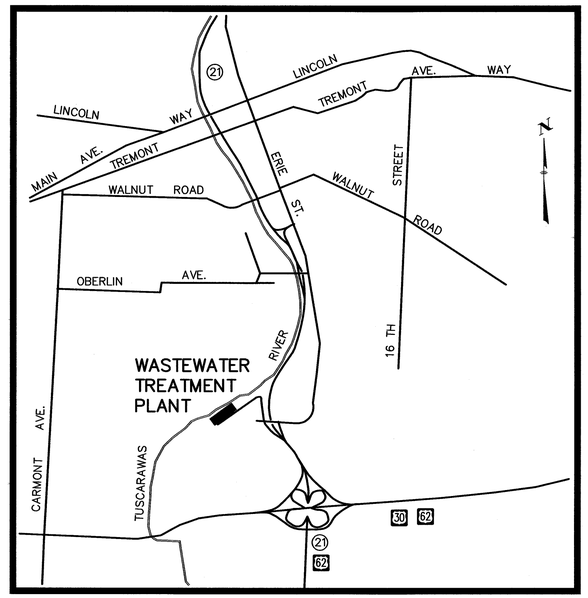

LOCATION MAP

NOT TO SCALE

CITY OFFICIALS

FRANCIS H. CICCHINELLI, JR.	MAYOR
MICHAEL LOUDIANA	SAFETY/SERVICE DIRECTOR
JAYNE FERRERO	AUDITOR
PAUL LAMBERT	TREASURER
PERICLES G STERGIOS	LAW DIRECTOR
KEITH A. DYLEWSKI	CITY ENGINEER
TONY ULRICH	MANAGER WASTEWATER TREATMENT DEPARTMENT

CITY COUNCIL

GLENN GAMBER	PRESIDENT
RONALD MANG	MEMBER, WARD 1
GARY ANDERSON	MEMBER, WARD 2
KATHERINE CATAZARO-PERRY	MEMBER, WARD 3
TONY M. TOWNSEND	MEMBER, WARD 4
DONNIE PETERS JR.	MEMBER, WARD 5
DAVID K. MCCUNE	MEMBER, WARD 6
PAUL MANSON	MEMBER AT LARGE
LARRY SLAGLE	MEMBER AT LARGE
DAVID HERSHER	MEMBER AT LARGE
MARY BETH BAILEY	CLERK

APPROVED BY:

KEITH A. DYLEWSKI P.E. P.S.
CITY ENGINEER — DATE 3/11/11

MICHAEL LOUDIANA
DIRECTOR OF PUBLIC SERVICE AND SAFETY — DATE 3/14/11

STATE OF OHIO — Richard W. Reed — E-57288 — REGISTERED PROFESSIONAL ENGINEER

RICHARD W. REED P.E.
REG. ENGINEER NO. E-57288 — DATE 2-23-11

PLANS PREPARED BY

CTI ENGINEERS, INC.
101 CENTRAL PLAZA SOUTH, SUITE 400
CANTON, OH 44702
330-455-7733

UNDERGROUND UTILITIES
TWO WORKING DAYS
BEFORE YOU DIG
Call 800-362-2764 (Toll Free)
OHIO UTILITIES PROTECTION SERVICE
NON-MEMBERS
MUST BE CALLED DIRECTLY

THIS DRAWING IS AN INSTRUMENT OF SERVICE OWNED BY CTI ENGINEERS, INC. WHICH SHALL BE DEEMED THE AUTHOR AND WHICH SHALL RETAIN ALL STATUTORY AND COMMON LAW RIGHTS, INCLUDING COPYRIGHTS. THIS DRAWING SHALL NOT BE SCANNED, COPIED, OR DISTRIBUTED TO OTHERS IN ANY FORM OR USED FOR ANY OTHER PURPOSE OR PROJECT WITHOUT PRIOR WRITTEN CONSENT OF CTI ENGINEERS, INC. CTI ENGINEERS, INC. CANNOT GUARANTEE THAT ELECTRONIC COPIES OF THIS DRAWING ARE EXACT DUPLICATES OF THE SEALED ORIGINAL DRAWING. IN THE EVENT OF A CONFLICT BETWEEN AN ELECTRONIC COPY AND THE SEALED ORIGINAL, THE SEALED ORIGINAL SHALL GOVERN.

E:\E11004 - Massillon Plant Operations Assistance\AERATION RECYCLE\C02 ABSY.dwg

ABBREVIATIONS

A

AB	ANCHOR BOLT
ACP	ASBESTOS CEMENT PIPE
ADJT	ADJUSTABLE
AFF	ABOVE FINISHED FLOOR
ALT	ALTERNATIVE
ALUM	ALUMINUM
@	AT
ASPH	ASPHALT
AUTO	AUTOMATIC
AVG	AVERAGE

B

BIP	BLACK IRON PIPE
BF	BLIND FLANGE OR BOTTOM FACE
BFP	BELT FILTER PRESS
BLDG	BUILDING
BLK	BLOCK
BM	BENCHMARK
BOS	BOTTOM OF SLAB
BOT	BOTTOM
BRG	BEARING

C

C	CHEMICAL
CB	CATCH BASIN
CF	CUBIC FEET
CFM	CUBIC FEET PER MINUTE
CI	CAST IRON
CIP	CAST IRON PIPE
℄, C/L	CENTERLINE
C/C	CENTERLINE TO CENTERLINE
CL	CLEAR
CLG	CEILING
CMP	CORRUGATED METAL PIPE
CMU	CONCRETE MASONRY UNIT
CO	CLEAN OUT
COL	COLUMN
CON	CONCENTRIC
CONC	CONCRETE
CONN	CONNECTION
CPR	COPPER
CJ	CONSTRUCTION JOINT
CONTR JT	CONTRACTION JOINT
CONST	CONSTRUCTION
CONT	CONTINUOUS
CPLG	COUPLING
CTRL	CONTROL
CW	COLD WATER
CY	CUBIC YARD

D

D	DRAIN
DEMO	DEMOLITION
DIA, ø	DIAMETER
DIAG	DIAGONAL
DIG	DIGESTED
DIM	DIMENSION
DIP	DUCTILE IRON PIPE
DISCH	DISCHARGE
D.L.	DEAD LOAD
DO	DOOR OPENING, DISSOLVED OXYGEN
DSL	DIGESTED SLUDGE
DS	DOWN SPOUT OR DICONNECT SWITCH
DTL	DETAIL
DWG	DRAWING

E

E	EAST
EA	EACH
ECC	ECCENTRIC
ED	EQUIPMENT DRAIN
EF	EACH FACE
EFFL	EFFLUENT
ELEC	ELECTRICAL
EL	ELEVATION
ELB	ELBOW
EQ	EQUAL
EW	EACH WAY
EXIST	EXISTING
EJ	EXPANSION JOINT
EXP	EXPOSED
EXT	EXTERIOR

F

FA	FRESH AIR
FB	FLOOR BOX OR FOUNDATION BEAM
FD	FLOOR DRAIN
FDN	FOUNDATION
FE	FIRE EXTINGUISHER
FF	FINISHED FLOOR
FH	FIRE HYDRANT
FIBREINFP	FIBERGLASS REINFORCED POLYMERS
FIG	FIGURE
FIN	FINISHED
FLG	FLANGE
FLR	FLOOR
FLRET	FLOW RETENTION
FM	FORCE MAIN
FRP	FIBERGLASS REINFORCED PLASTIC PIPE
FT	FEET OR FOOT
FTG	FOOTING

G

G	GAS
GA	GAUGE OR GAGE
GAL	GALLON
GALV	GALVANIZED
GBT	GRAVITY BELT THICKENER
GEN	GENERAL
GRD	GRADE OR GRADING

H

HB	HOSE BIBB
HC	HOLLOW CORE
HDPE	HIGH DENSITY POLYETHYLENE
HE	HEAT EXCHANGER
HK	HOOK(S)
HM	HOLLOW METAL
HORIZ	HORIZONTAL
HP	HORSEPOWER
HPT	HIGH POINT
HS	HIGH SERVICE
HT	HEIGHT
HU	HEATING UNIT
HVAC	HEATING/VENTILATION AIR CONDITIONING
HWL	HIGH WATER LEVEL
HW	HOT WATER
HWR	HOT WATER RETURN
HWS	HOT WATER SUPPLY

I

ID	INSIDE DIAMETER
IF	INSIDE FACE
IJ	ISOLATION JOINT
IN	INCHES
INFL	INFLUENT
INT	INTERIOR
INV	INVERT
IP	IRON PIN

J

JT	JOINT

L

LB	POUND
LG	LENGTH
LL	LIVE LOAD
LLH	LONG LEG HORIZONTAL
LLV	LONG LEG VERTICAL
LPT	LOW POINT
LR	LONG RADIUS
LS	LOW SERVICE
LT	LEFT
LTG	LIGHTING
LWL	LOW WATER LEVEL

M

MAX	MAXIMUM
MCC	MOTOR CONTROL CENTER
MFR	MANUFACTURER
MG	MILLION GALLONS
MGD	MILLION GALLONS PER DAY
MH	MANHOLE
MISC	MISCELLANEOUS
MIN	MINIMUM
MJ	MECHANICAL JOINT
MK	MARK
MO	MASONRY OPENING OR MOTOR OPERATED

N

N	NORTH
NC	NORMALLY CLOSED
NF	NEAR FACE
NO	NORMALLY OPEN
No.	NUMBER
NPW	NON-POTABLE WATER
NTS	NOT TO SCALE
NWL	NORMAL WATER LEVEL

O

OC	ON CENTER
OD	OUTSIDE DIAMETER
OF	OUTSIDE FACE
OH	OVERHEAD
OPG	OPENING
OPP	OPPOSITE
OZ	OUNCE

P

PCF	POUNDS PER CUBIC FOOT
PCP	PUMP CONTROL PANEL
PE	PLAIN END
PEJM	PREMOLDED EXP. JT. MATERIAL
PL	PLATE
PLCS	PLACES
PLT	PLANT
PNL	PANEL
POT	POTABLE
PP	POLYPROPYLENE
PRCP	PRESTRESSED REINFORCED CONCRETE PIPE
PROP	PROPOSED
PS	PUMP STATION
PSF	POUNDS PER SQUARE FOOT
PSI	POUNDS PER SQUARE INCH
PVC	POLYVINYL CHLORIDE
PVMT	PAVEMENT
PW	POTABLE WATER
PWD	PLYWOOD

Q

QUAN	QUANTITY

R

R	RISE
RAD	RADIUS
RAS	RETURNED ACTIVATED SLUDGE
RB	ROOF BEAM
RCP	REINFORCED CONCRETE PIPE
RD	ROOF DRAIN
RECIRC	RECIRCULATION
RED	REDUCER
REINF	REINFORCING
REQ'D	REQUIRED
RM	ROOM
RT	RIGHT
R/W	RIGHT OF WAY

S

S	SLAB, SOUTH
SAN	SANITARY
SCH	SCHEDULE
SEC	SECTION
SF	SQUARE FEET
SHT	SHEET
SJ	SAW JOINT
SIM	SIMILAR
SPC	SPACES
SPEC	SPECIFICATION
SPG	SPACING
SQ	SQUARE
S STL	STAINLESS STEEL
ST	STRAIGHT
STA	STATION
STD	STANDARD
STIR	STIRRUPS
STL	STEEL
STR	STRUCTURAL
STM	STORM SEWER
SUP	SUPERNATENT
SY	SQUARE YARD
SYM	SYMMETRICAL
SW	SWITCH

T

TBM	TEMPORARY BENCHMARK
TF	TOP FACE
THK	THICKNESS
THKD	THICKENED
T	TOP
TOB	TOP OF BANK OR TOP OF BLOCK
TOC	TOP OF CONCRETE
TOS	TOP OF SLAB
T&B	TOP AND BOTTOM
TC	TOP OF COVER
T&G	TONGUE AND GROOVE
TP	TURNING POINT OR TANGENT POINT
TRANS	TRANSFER
TYP	TYPICAL

U

UE	UNDERGROUND ELECTRIC
UT	UNDRGROUND TELEPHONE

V

V	VACUUM
VAR	VARIES
VCP	VITRIFIED CLAY PIPE
VERT	VERTICAL

W

WAS	WASTE ACTIVATED SLUDGE
W	WATER OR WIDE
W/	WITH
W/O	WITHOUT
WC	WATER CLOSET
WD	WOOD
WH	WATER HEATER
WHA	WATER HAMMER ARRESTER
WL	WATER LEVEL OR WATER LINE
WWF	WELDED WIRE FABRIC

Y

YH	YARD HYDRANT

SECTION DESIGNATIONS

SECTION CUT AND SHOWN ON DIFFERENT SHEETS — A / C1 — SHEET ON WHICH SECTION IS SHOWN OR CUT (DISCIPLINES – SHEET)

SECTION CUT AND SHOWN ON SAME SHEETS — A

MAJOR SECTION

SECTION CUT AND SHOWN ON DIFFERENT SHEETS — 1 / C1 — SHEET ON WHICH SECTION IS SHOWN OR CUT (DISCIPLINES – SHEET)

SECTION CUT AND SHOWN ON SAME SHEETS — 1

MINOR SECTION

SITE PLAN SYMBOLS

SB #	SOIL BORING NUMBER
X X	EXISTING FENCE
X X	PROPOSED FENCE
	EXISTING GUARDRAIL, PROPOSED GUARDRAIL
PL	PROPERTY LINE
CL	CENTERLINE LINE
BL	BASELINE
R/W	RIGHT OF WAY LINE
123	PROPOSED CONTOUR
123	EXISTING CONTOUR
123.45	NEW GRADE SPOT ELEVATION
123.45	EXISTING GRADE SPOT ELEVATION
	EDGE OF WATER
	DRAINAGE FLOW
	EXISTING CATCH BASIN, MANHOLE
	PROPOSED CATCH BASIN, MANHOLE
	ADJUST TO GRADE CATCH BASIN, MANHOLE
G	GAS, WATER VALVE BOX
W	GAS, WATER VALVE BOX
	FIRE HYDRANT, YARD HYDRANT
CO	CLEANOUT, FLOOR DRAIN
	IRON PIN SET, IRON PIN FOUND
	TREE, SHRUB
	BRUSH, EVERGREEN
	POWER POLE, LIGHT POLE
	TELEPHONE POLE, GUYED WIRE
	POWER AND LIGHT POLE
	POWER AND TELEPHONE POLE
	TELEPHONE, POWER, CABLE AND LIGHT POLE

STRUCTURAL/ARCHITECTURAL LEGEND

PROPOSED CONCRETE (4,000 PSI)	ACOUSTICAL
EXISTING CONCRETE	DEMOLITION
PROPOSED CONCRETE (2,000 PSI)	WOOD
CMU	STEEL
CONCRETE BLOCK	ALUMINUM
CONCRETE BLOCK W/ FILLED CORES	GRAVEL OR COMPACTED FILL
FACE BLOCK OR BRICK	EARTH
METAL WALL FRAMING	INSULATION
GLAZED TILE	DEMOLITION

TEXT LEGEND

EXISTING TEXT	SLANTED AND LIGHTER TEXT – EXISTING FEATURES
PROPOSED TEXT	UPRIGHT AND BOLDER TEXT – PROPOSED WORK

TWO LINE PIPING SYMBOLS

FLANGE JOINT
MECHANICAL JOINT
BELL & SPIGOT JOINT
PVC PIPE JOINT
SLEEVE COUPLING
ANGLE VALVE
CHECK VALVE
BUTTERFLY VALVE
GATE VALVE
GLOBE VALVE
MAGNETIC FLOW METER "S" SIZE MAGNETIC METER
PLUG VALVE
CONCENTRIC REDUCER
ECCENTRIC REDUCER
GROOVED COUPLING
WELD JOINT

PAVING LEGEND

GRAVEL PAVING
CONCRETE SIDE WALK
ASPHALT PAVING
CONCRETE PAVING

CALL OUTS

FG1	*FABRICATED GATES NUMBER CALL OUT*
L1	*LEVEL METER NUMBER CALL OUT*
M1	*MAGNETIC FLOW METER NUMBER CALL OUT*
SG1	*SLUICE GATES NUMBER CALL OUT*
V1	*VALVE NUMBER CALL OUT (3" INCH AND LARGER)*
WC1	*WALL CASTING NUMBER CALL OUT*

THIS DRAWING IS AN INSTRUMENT OF SERVICE OWNED BY CTI ENGINEERS, INC. WHICH SHALL NOT BE DEEMED TO BE A WORK FOR HIRE. THE ALLEGED STATUTORY AND COMMON LAW RIGHTS, INCLUDING COPYRIGHTS, OF THIS DRAWING SHALL NOT BE SCANNED, COPIED, OR DUPLICATED IN WHOLE OR IN PART, NOR USED FOR ANY OTHER PURPOSE OR PROJECT WITHOUT PRIOR WRITTEN AUTHORIZATION FROM CTI ENGINEERS, INC. CANNOT GUARANTEE THAT ELECTRONIC COPIES OF THIS DRAWING ARE EXACT COPIES OF THE SEALED ORIGINAL DRAWING. IN THE EVENT OF A CONFLICT BETWEEN AN ELECTRONIC COPY AND THE SEALED ORIGINAL, THE SEALED ORIGINAL SHALL GOVERN.

REVISIONS				
NO.	DESCRIPTIONS	DATE	BY	APP'D

DESIGNED BY: TMK
DRAWN BY: AJP
CHECKED BY: TMK
APPROVED BY: RWR

CITY OF MASSILLON, OHIO
WWTP IMPROVEMENTS

AERATION TANK RECYCLE
ABBREVIATIONS AND SYMBOLS

CTI ENGINEERS, INC.
101 CENTRAL PLAZA SOUTH, SUITE 400
CANTON, OHIO 44702
330-455-7733

JOB NO. E11004
DATE 2/16/2011
SCALE NOT TO SCALE
SHEET NO C2

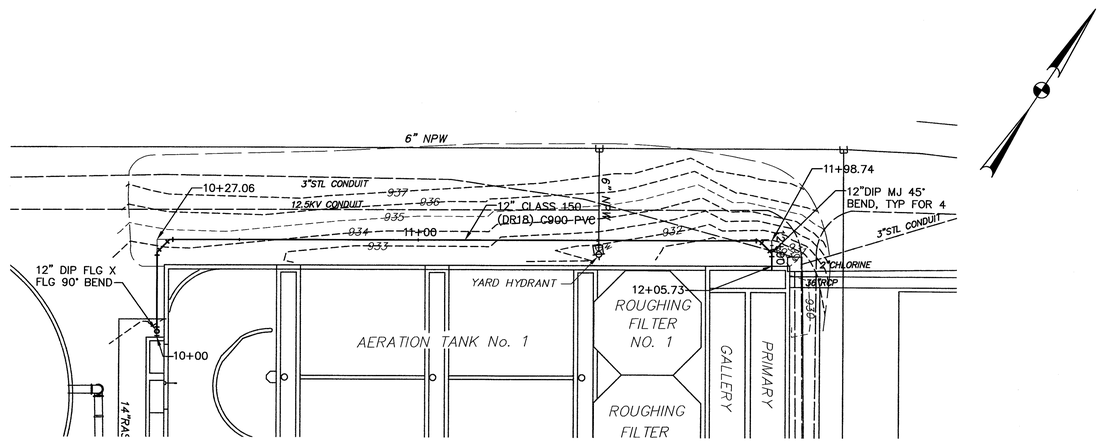

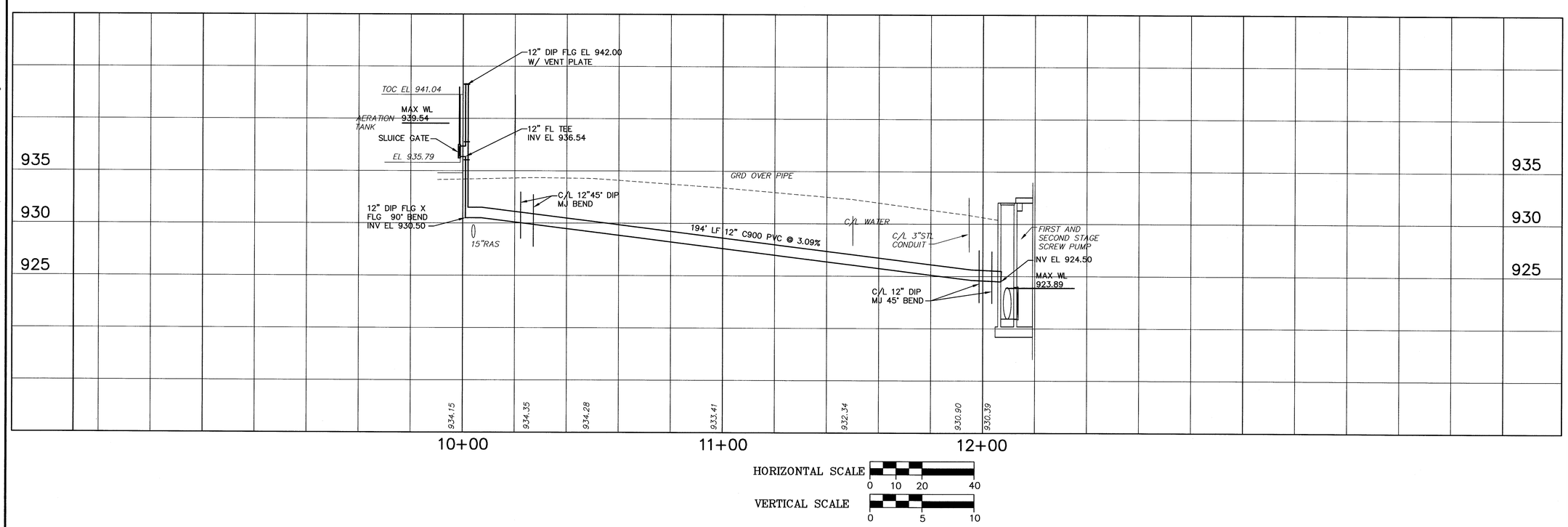

THIS DRAWING IS AN INSTRUMENT OF SERVICE OWNED BY CTI ENGINEERS, INC. WHICH SHALL BE DEEMED THE AUTHOR OF THIS DOCUMENT. THIS STATUTORY AND COMMON LAW RIGHTS, INCLUDING COPYRIGHTS, WITHOUT LIMITATION, WILL BE ASSERTED. NOT TO BE DISTRIBUTED TO OTHERS IN ANY FORM OR USED FOR ANY OTHER PURPOSE OR PROJECT WITHOUT PRIOR WRITTEN CONSENT OF CTI ENGINEERS, INC. CTI ENGINEERS, INC. CANNOT GUARANTEE THAT EXPLICITNESS OF THE SET THIS DRAWING ARE EXACT DUPLICATES OF THE SEALED ORIGINAL DRAWING. IN THE EVENT OF A CONFLICT BETWEEN AN ELECTRONIC COPY AND THE SEALED ORIGINAL, THE SEALED ORIGINAL SHALL GOVERN.

REVISIONS

NO.	DESCRIPTIONS	DATE	BY	APP'D

DESIGNED BY TMK/AJP
DRAWN BY AJP
CHECKED BY TMK
APPROVED BY RWR

CITY OF MASSILLON, OHIO
WWTP IMPROVEMENTS

AERATION TANK RECYCLE
PLAN AND PROFILE

CTI ENGINEERS, INC.
101 CENTRAL PLAZA SOUTH, SUITE 400
CANTON, OH 44702
330-455-7733

JOB NO. E11004
DATE 2/16/2011
SCALE AS NOTED
SHEET NO C3

FILE: E:\E11004 - Massillon Plant Operations Assistance\AERATION RECYCLE\C03 PLAN AND PROFILE.dwg Feb 23, 2011 - CTI ENGEERS INC.

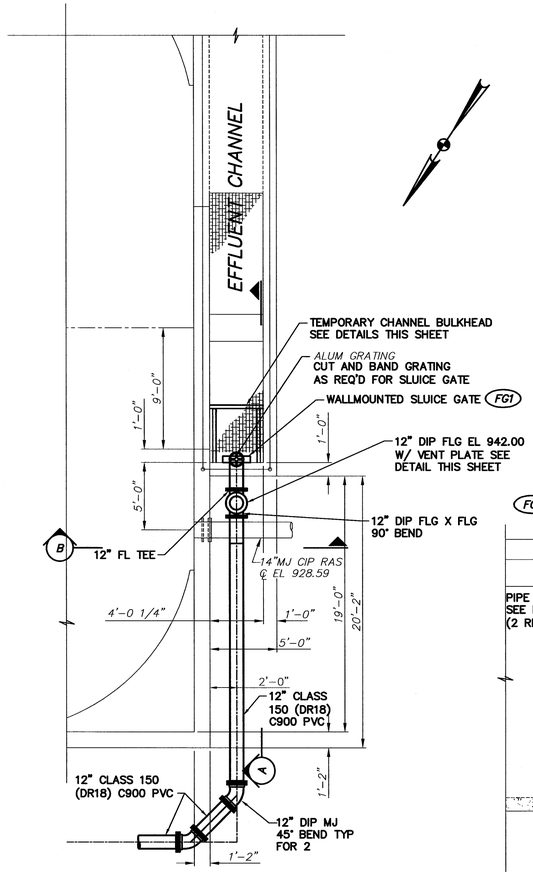

AERATION PLAN

SCALE: 3/16"=1'-0"

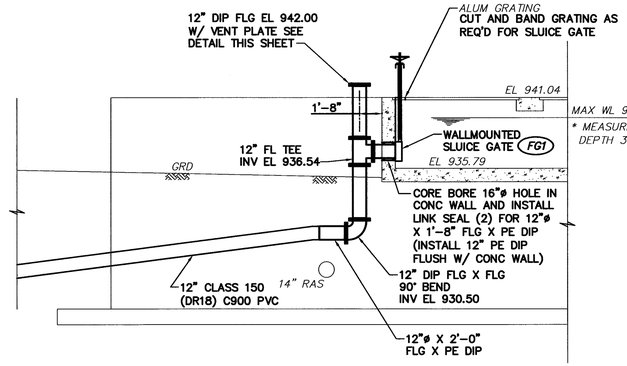

SECTION A

SCALE : 3/16"=1'-0"

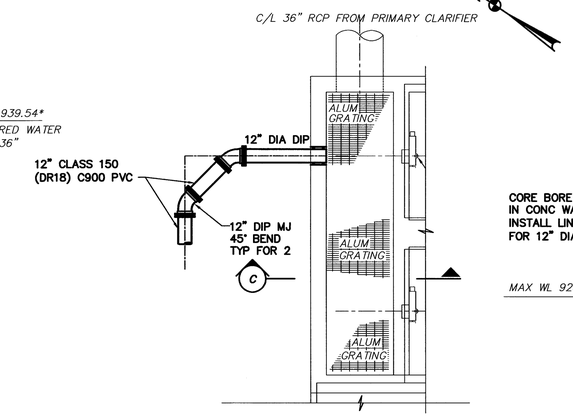

PRIMARY SCREW PUMP PLAN

SCALE: 3/16"=1'-0"

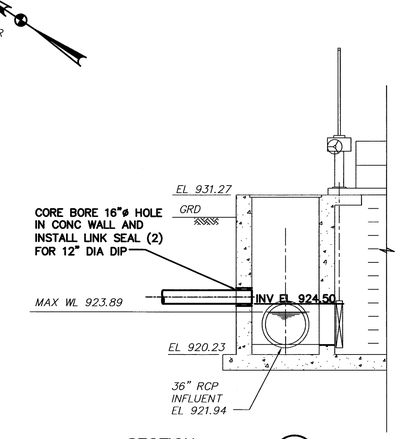

SECTION C

SCALE : 3/16"=1'-0"

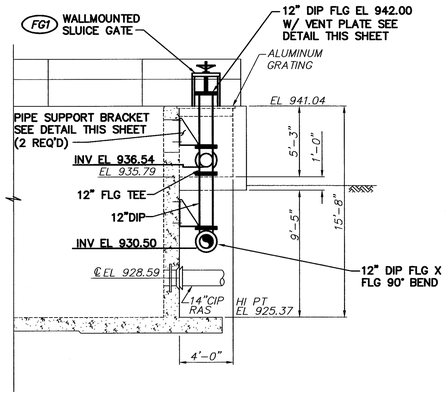

SECTION B

SCALE : 3/16"=1'-0"

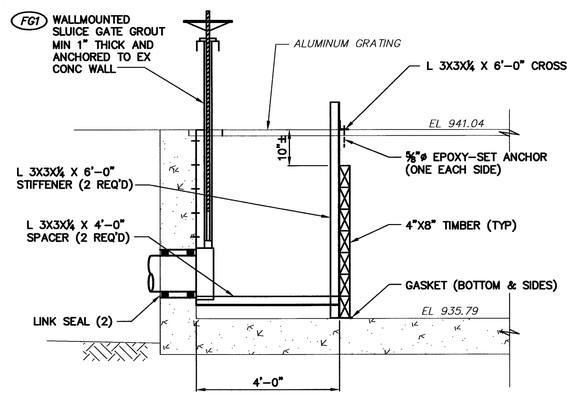

TEMPORARY CHANNEL BULKHEAD

SCALE: 1/2"=1'-0"

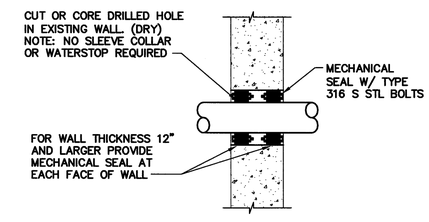

MECHANICAL LINK SEAL

NOT TO SCALE

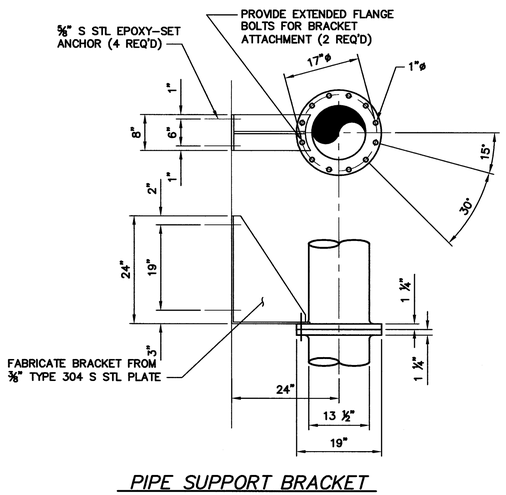

PIPE SUPPORT BRACKET

SCALE: 3/4"=1'-0"

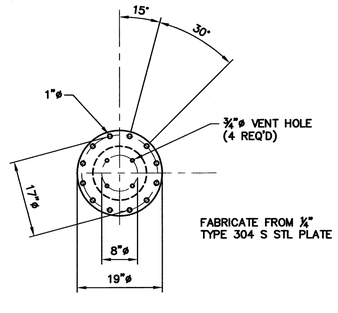

VENT PLATE DETAIL

SCALE: 3/4"=1'-0"

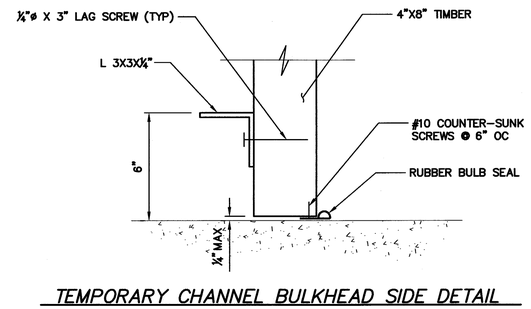

TEMPORARY CHANNEL BULKHEAD SIDE DETAIL

SCALE: 3"=1'-0"

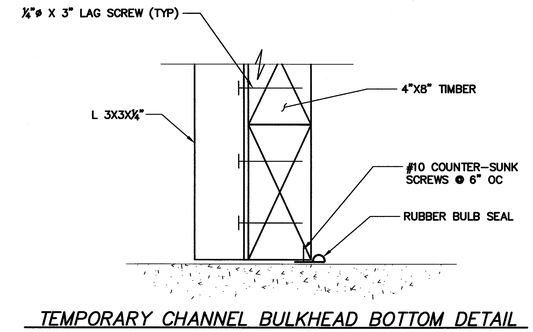

TEMPORARY CHANNEL BULKHEAD BOTTOM DETAIL

SCALE: 3"=1'-0"

NOTE:
RUBBER BULB SEAL TO BE MCMASTER-CARR ITEM 9141K921 OR ENGINEER APPROVED EQUAL.

THIS DRAWING IS AN INSTRUMENT OF SERVICE OWNED BY ALL ENGINEERS, INC. (CTI ENGINEERS) WHICH, SUBJECT TO STATUTORY AND COMMON LAW RIGHTS, INCLUDING COPYRIGHTS, IS PROVIDED TO THE OWNER FOR INFORMATION. IT MAY BE DISTRIBUTED TO OTHERS IN ANY FORM OR USED FOR ANY OTHER PURPOSE OR PROJECT WITHOUT PRIOR WRITTEN CONSENT OF CTI ENGINEERS. CTI ENGINEERS, INC. CANNOT GUARANTEE THAT DUPLICATES OF THE DRAWING WILL BE EXACT DUPLICATES OF THE SEALED ORIGINAL DRAWING. IN THE EVENT OF A CONFLICT BETWEEN AN ELECTRONIC OR PAPER COPY AND THE SEALED ORIGINAL, THE SEALED ORIGINAL SHALL GOVERN.

REVISIONS				
NO.	DESCRIPTIONS	DATE	BY	APP'D

DESIGNED BY TMK/AJP
DRAWN BY AJP
CHECKED BY TMK
APPROVED BY RWR

CITY OF MASSILLON, OHIO
WWTP IMPROVEMENTS

AERATION TANK RECYCLE
PLAN, SECTIONS, AND DETAILS

CTI ENGINEERS, INC.
191 CENTRAL PLAZA SOUTH, SUITE 400
CANTON, OHIO 44702
330-456-7733

JOB NO. E11004
DATE 2/16/2011
SCALE AS NOTED
SHEET NO P1

FILE: E:\E11004 - Massillon Plant Operations Assistance\AERATION RECYCLE\P1 SCREW PUMP AERATION.dwg Feb 23, 2011 - CTI ENGEERS INC.