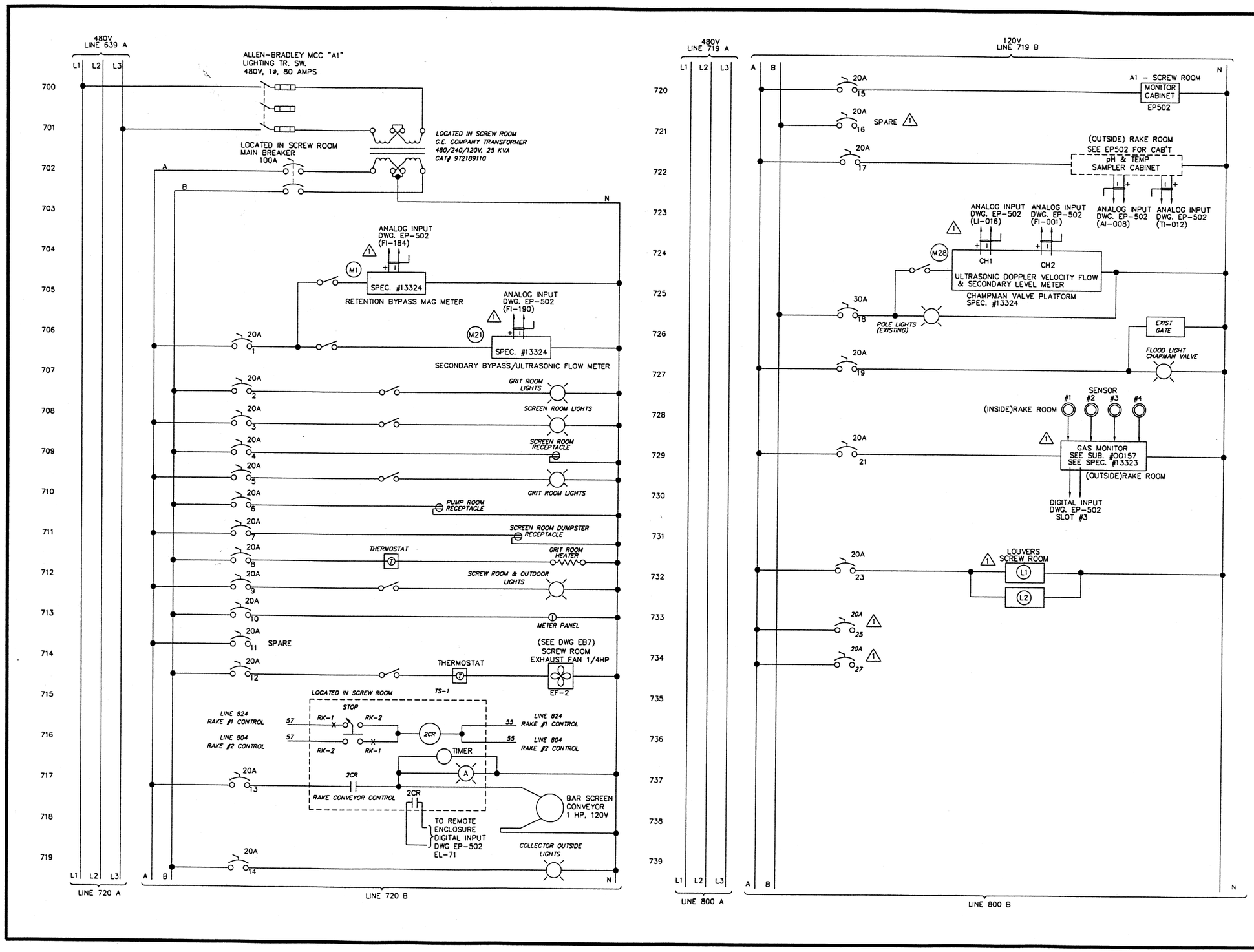

SEIFERT TECHNOLOGIES, INC.
MASSILLON, OHIO
#s 5674 DRAWN RJL

REVISIONS			
NO.	DESCRIPTIONS	DATE	BY	APP'D
1	ADDED REF'S & RE-ARRANGE	9/29/00	TSS	RJL

DESIGNED BY	ST1/TSS
DRAWN BY	ST1/TSS
CHECKED BY	ST1/TSS
APPROVED BY	ST1/RJL

ENVIRONMENTAL, INC.
ENGINEERS IN WATER AND EARTH SCIENCES
UNIONTOWN, OHIO

CITY OF MASSILLON, OHIO
WWTP UPGRADE 2000
TRANSFORMER "A1", MCC-A1
120V BREAKER PANEL IN SCREW ROOM

JOB NO.	9031
DATE	2/16/01
SCALE	N/A
SHEET	EP7-1

9031SCHE7.DWG