W:\ACAD14\CTI Envi\5674\Completed Dwgs\20-99\9031SCHE20D.dwg Fri Aug 03 08:30:35 2001

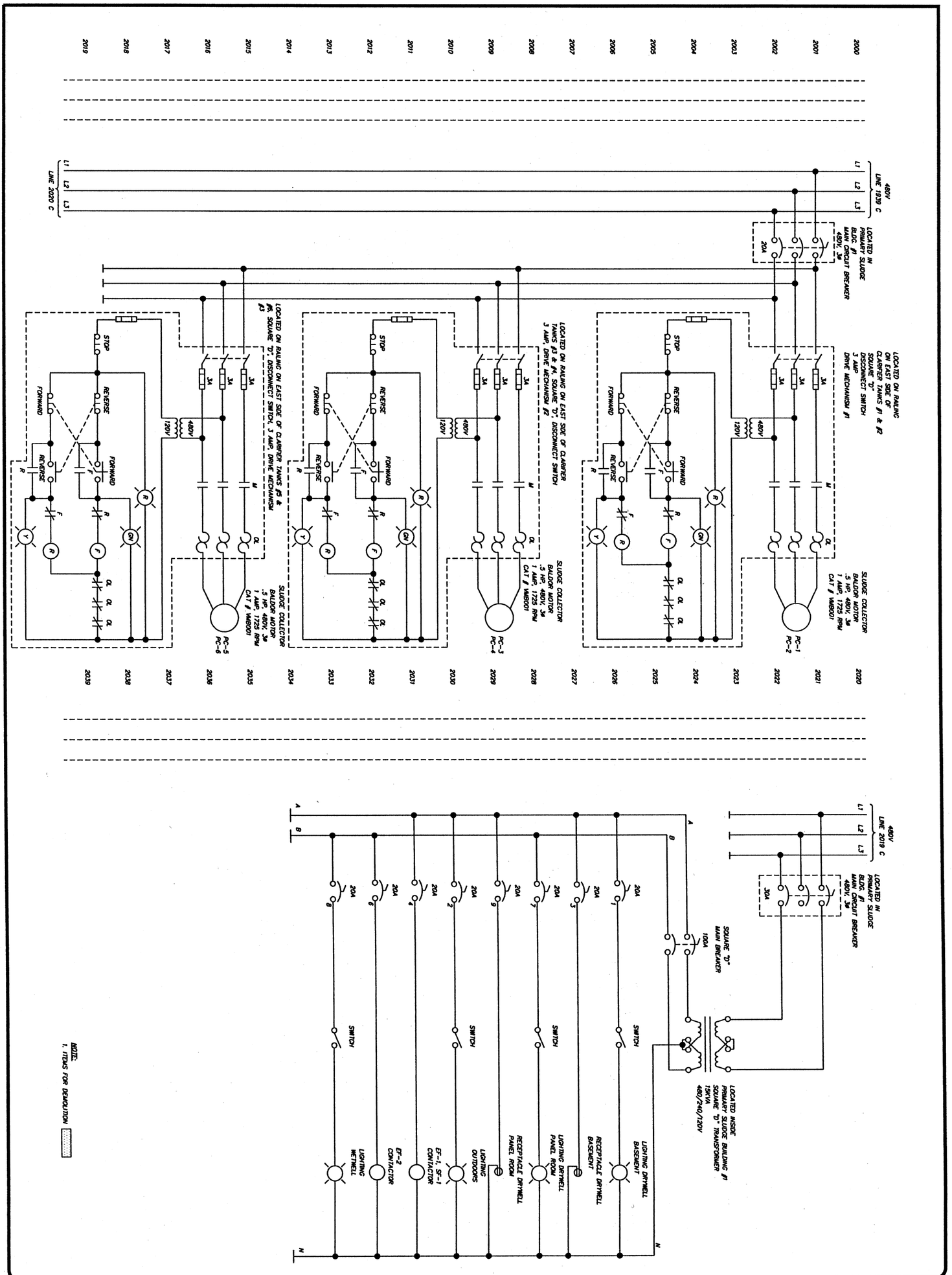

JOB NO.	E9031	DATE	7/19/00
SCALE	N/A	SHEET	EP20-D

9031SCHE20D.DWG

CTI ENVIRONMENTAL, INC.
ENGINEERS IN WATER AND EARTH SCIENCES
UNIONTOWN, OHIO

CITY OF MASSILLON, OHIO
WWTP UPGRADE 2000
WIRING SCHEMATIC DEMOLITION PLAN

DESIGNED BY	STI/TSS
DRAWN BY	STI/ELG
CHECKED BY	STI/TSS
APPROVED BY	STI/RJL

REVISIONS

NO.	DESCRIPTIONS	DATE	BY	APP'D

SEIFERT TECHNOLOGIES, INC.
MASSILLON, OHIO
JOB NO. 5674 PROJECT ENGINEER RJL