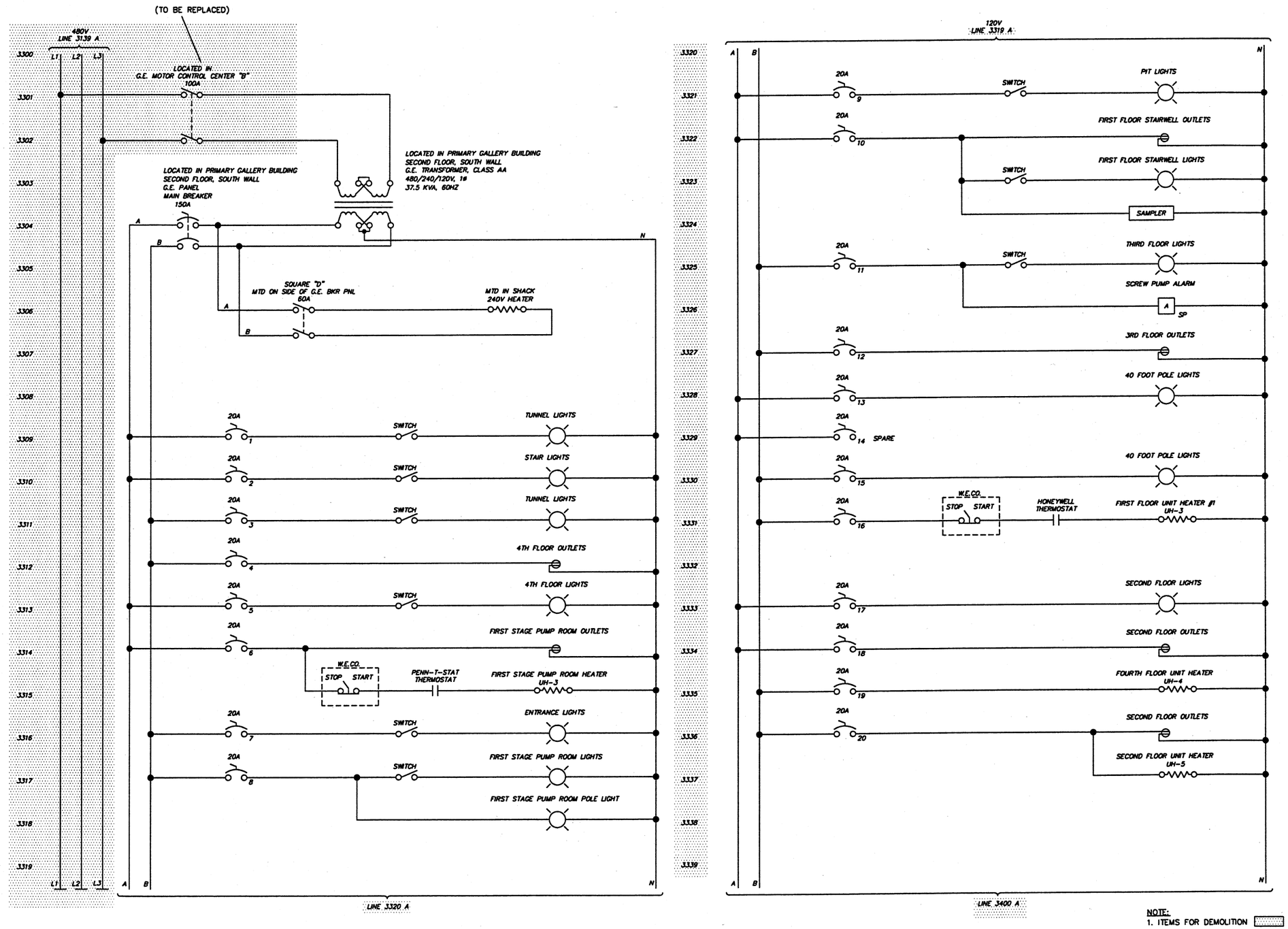

NOTE:
1. ITEMS FOR DEMOLITION

SEIFERT TECHNOLOGIES, INC.
MASSILLON, OHIO
JOB No. 5674 PROJECT RJL

REVISIONS

NO.	DESCRIPTIONS	DATE	BY	APP'D

DESIGNED BY STI/TSS
DRAWN BY STI/TSS
CHECKED BY STI/TSS
APPROVED BY STI/RJL

CTI ENVIRONMENTAL, INC.
ENGINEERS IN WATER AND EARTH SCIENCES
UNIONTOWN, OHIO

CITY OF MASSILLON, OHIO
WWTP UPGRADE 2000
TR. "B" WIRING SCHEMATIC DEMOLITION PLAN

JOB NO. E9031
DATE 7/24/00
SCALE N/A
SHEET EP33-D

9031SCHE33D.DWG

W:\ACAD14\CTI Envi\5674\Completed Dwgs\20-99\9031SCHE33D.dwg Fri Aug 03 13:11:55 2001