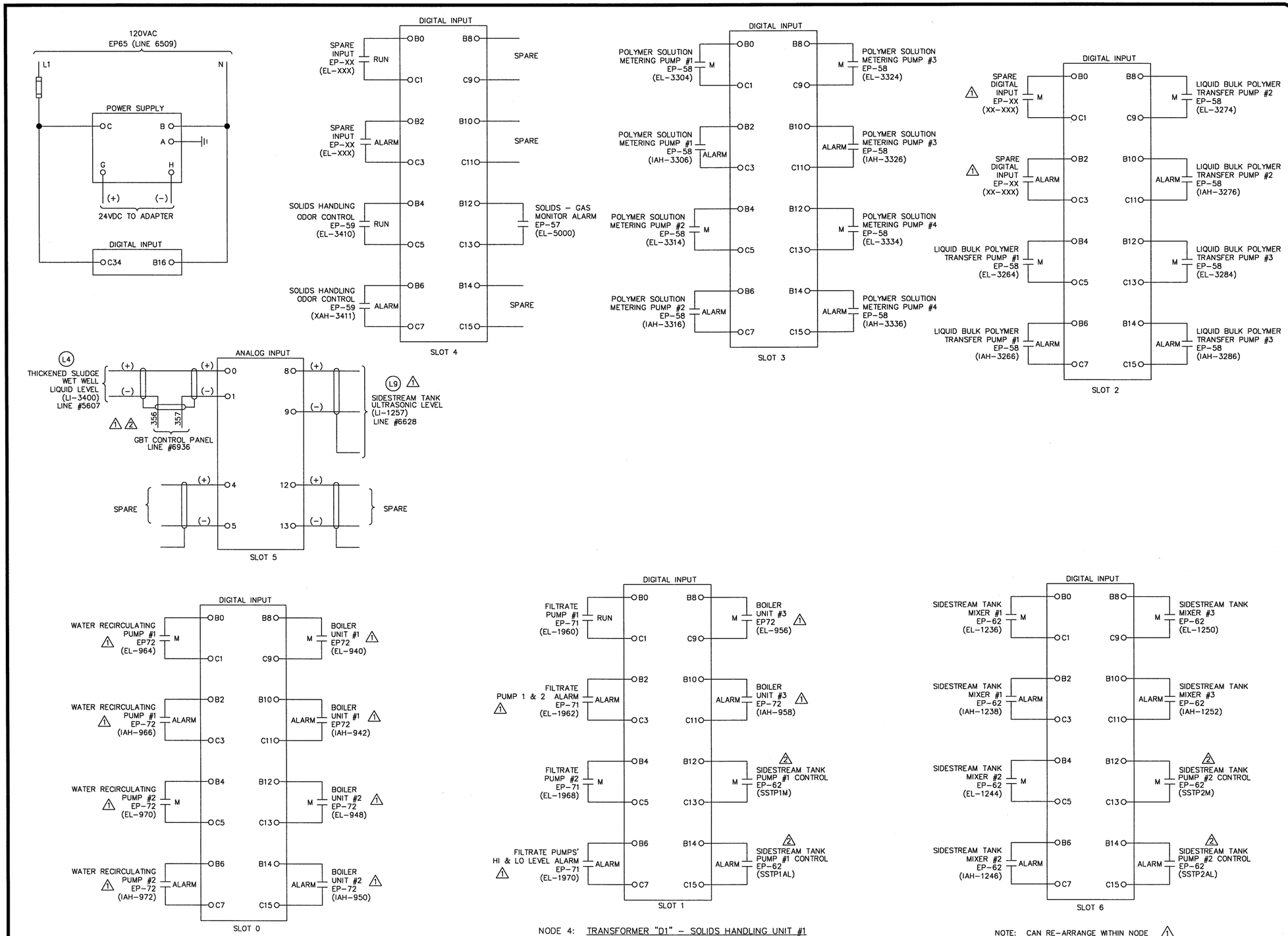

NODE 4: TRANSFORMER "D1" – SOLIDS HANDLING UNIT #1

NOTE: CAN RE-ARRANGE WITHIN NODE 1

SEIFERT TECHNOLOGIES, INC.
MASSILLON, OHIO
JOB NO. 3574 DWG. RJL

REVISIONS				
NO.	DESCRIPTIONS	DATE	BY	APP'D
1	UPDATED I/O	1/4/01	RJL	RJL
2	UPDATED I/O	7/9/01	TSS	RJL

DESIGNED BY ST1/RJL
DRAWN BY ST1/RRR
CHECKED BY ST1/RJL
APPROVED BY ST1/RJL

ENVIRONMENTAL, INC.
ENGINEERS, WATER AND EARTH SCIENCES
UNIONTOWN, OHIO

CITY OF MASSILLON, OHIO
WWTP UPGRADE 2000
MONITORING SYSTEM - I/O DIAGRAM - NODE 4
TRANSFORMER "D1" - SOLIDS HANDLING UNIT #1

JOB NO. E9031
DATE 6/1/01
SCALE N/A
SHEET EP505-2

9031SCHE505.DWG