DATE	SYM	REVISION RECORD	AUTH	DR	CK
5/12/03	A	FOR APPROVAL	CUST	HR	BS

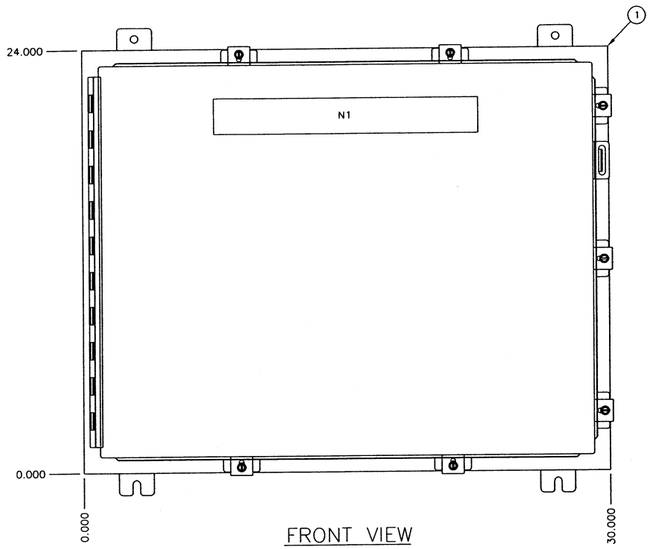

FRONT VIEW
SCALE: 1/4" = 1"

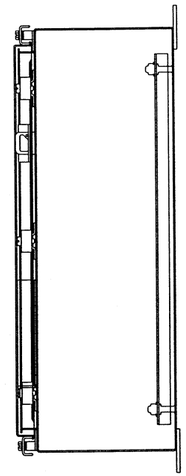

SIDE VIEW
SCALE: 1/4" = 1"

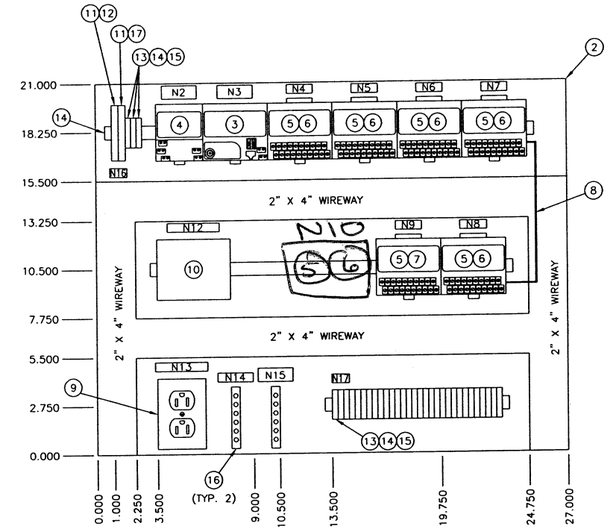

SUBPANEL
SCALE: 1/4" = 1"

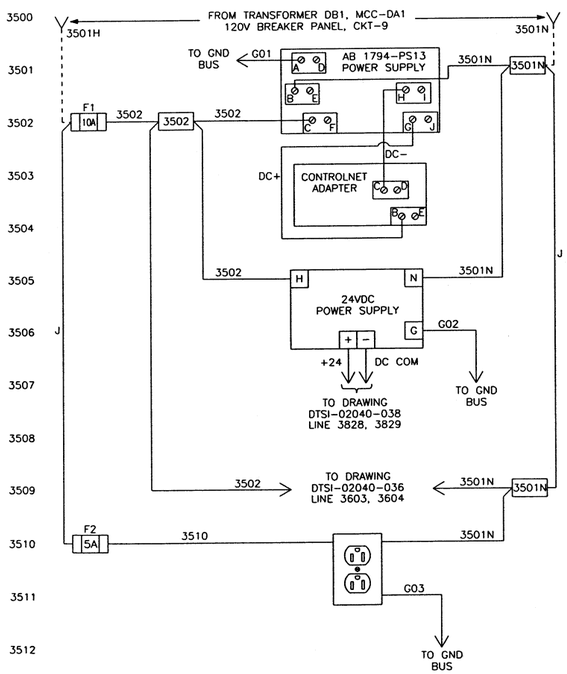

WIRING SCHEMATIC

BILL OF MATERIAL

ITEM	QTY	USED FOR	DESCRIPTION
1	1	ENCLOSURE	HOFFMAN #A-24H30BLP, 24"H X 30"W X 8"D, NEMA 4
2	1	SUBPANEL	HOFFMAN #A-30P24, 21"H X 27"W
3	1	CONTROLNET ADAPTER	ALLEN BRADLEY #1794-ACN15, 8 MODULE CONTROLNET INTERFACE
4	1	POWER SUPPLY	ALLEN BRADLEY #1794-PS13, 120/230VAC INPUT, 1.3A @ 24VDC OUTPUT
5	6	TERMINAL BASE	ALLEN BRADLEY #1794-TBNF, FUSED MODULE
6	6	INPUT MODULE	ALLEN BRADLEY #1794-IAB, 8 POINT NON-ISOLATED DIGITAL INPUT MODULE
7	1	INPUT MODULE	ALLEN BRADLEY #1794-IF4I, 4 POINT ISOLATED ANALOG INPUT MODULE
8	1	EXTENDER CABLE	ALLEN BRADLEY #1794-CE1, 1 FOOT
9	1	RECEPTACLE	HUBBELL #CR5362GY WITH BOX AND COVERPLATE 20 AMPS 125 VOLT GRAY
10	1	POWER SUPPLY	PHOENIX CONTACT #2939247, 120VAC INPUT, 24VDC OUTPUT @ 1.0A
11	2	FUSED TERMINAL	PHOENIX CONTACT #UK 6.3-HESI WITH 2 POS. OR 3 POS BRIDGE, EB2-10 OR EB10-10
12	1	F1	BUSSMAN #AGC-10, 10 AMP FAST-ACTING FUSE, 1/4" X 1 1/4"
13	33	TERMINAL	PHOENIX CONTACT #UK6N
14	LOT	RAIL	PHOENIX CONTACT #NS35 MOUNTING RAIL
15	LOT	END BARRIER	PHOENIX CONTACT #D-UK 4/10
16	1	GND BUS	ILSCO #D167-6, 6 POINT COPPER GND BUS
17	1	F2	BUSSMAN #AGC-5, 5 AMP FAST-ACTING FUSE, 1/4" X 1 1/4"

NAMEPLATES WHITE WITH BLACK LETTERING

	QTY	SIZE	LETTER SIZE	MTG. HOLES	LINE 1	LINE 2
N1	1	2" X 15"	1/2"	YES	SOLIDS HANDLING UNIT #1	REMOTE I/O ENCLOSURE - NODE 4
N2	1	0.75" X 2"	3/16"	NO	CONTROLNET	P.S.
N3	1	0.75" X 2"	3/16"	NO	CONTROLNET	ADAPTER
N4	1	0.5" X 1.5"	3/16"	NO	SLOT 0	
N5	1	0.5" X 1.5"	3/16"	NO	SLOT 1	
N6	1	0.5" X 1.5"	3/16"	NO	SLOT 2	
N7	1	0.5" X 1.5"	3/16"	NO	SLOT 3	
N8	1	0.5" X 1.5"	3/16"	NO	SLOT 4	
N9	1	0.5" X 1.5"	3/16"	NO	SLOT 5	
N10	0	0.5" X 1.5"	3/16"	NO	SLOT 6	
N11	0	0.5" X 1.5"	3/16"	NO	SLOT 7	
N12	1	0.5" X 3"	3/16"	NO	DC POWER SUPPLY	
N13	1	0.5" X 2"	3/16"	NO	RECEPTACLE	
N14	1	0.5" X 2"	3/16"	NO	GND BUS	
N15	1	0.75" X 2"	3/16"	NO	ISOLATED	GND BUS
N16	1	0.5" X 1"	3/16"	NO	TB1	
N17	1	0.5" X 1"	3/16"	NO	TB2	

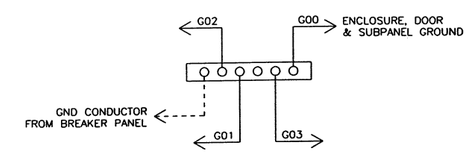

GROUND BUS

05/20/03 12:34

WIRE LUGS - NO ☒, YES ☐ RING ☐, LOCKING SPADE ☐
INSULATION: NYLON ☐, PVC ☒

WIRE SPECIFICATIONS:

USAGE	SIZE	COLOR	INSULATION
AC PANEL POWER	AWG #12	BLK.	THW/THHN
AC PANEL NEUTRAL	AWG #12	WHT.	THW/THHN
AC PANEL GROUND	AWG #12	GRN.	THW/THHN
AC CONTROL POWER	AWG #14	RED	THW/THHN
AC CONTROL NEUTRAL	AWG #14	WHT.	THW/THHN
AC FOREIGN	AWG #14	YELLOW	THW/THHN
DC POWER	AWG #16	BLUE	THW/THHN
DC CONTROL	AWG #16	BLUE	THW/THHN
SIGNAL/INSTRUMENTS	AWG #16	2 CONDUCTOR SHL'D	

STATE OF OHIO
ROBERT A. LANDTHORN
E-37992
REGISTERED PROFESSIONAL ENGINEER

KOKOSING CONSTRUCTION CO.
P.O. #

DUBLIN TECHNICAL SYSTEMS INC.
PROJECT # 02040

TOLERANCES
± DECIMAL ± .03
FRACTIONAL ± 1/32"
ANGULAR ± 1°

DUBLIN TECHNICAL SYSTEMS, INC.

CITY OF MASSILLON, OHIO
REGIONAL WASTEWATER TREATMENT PLANT - UPGRADE 2000
PROJECT NO. E9931

SCALE: NONE
DRAWN BY: HR
APPROVED BY: BS

TITLE: TRANS D1A NODE 4 SOLIDS HANDLING UNIT #1
PANEL LAYOUT, BILL OF MATERIAL & WIRING SCHEMATIC

DATE: 4/09/02
DRAWING NUMBER: DTSI - 02040 - 035