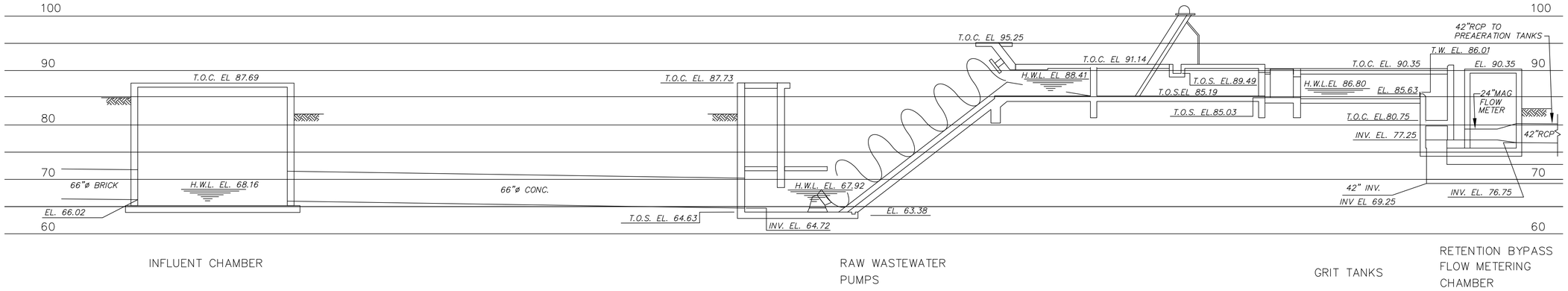

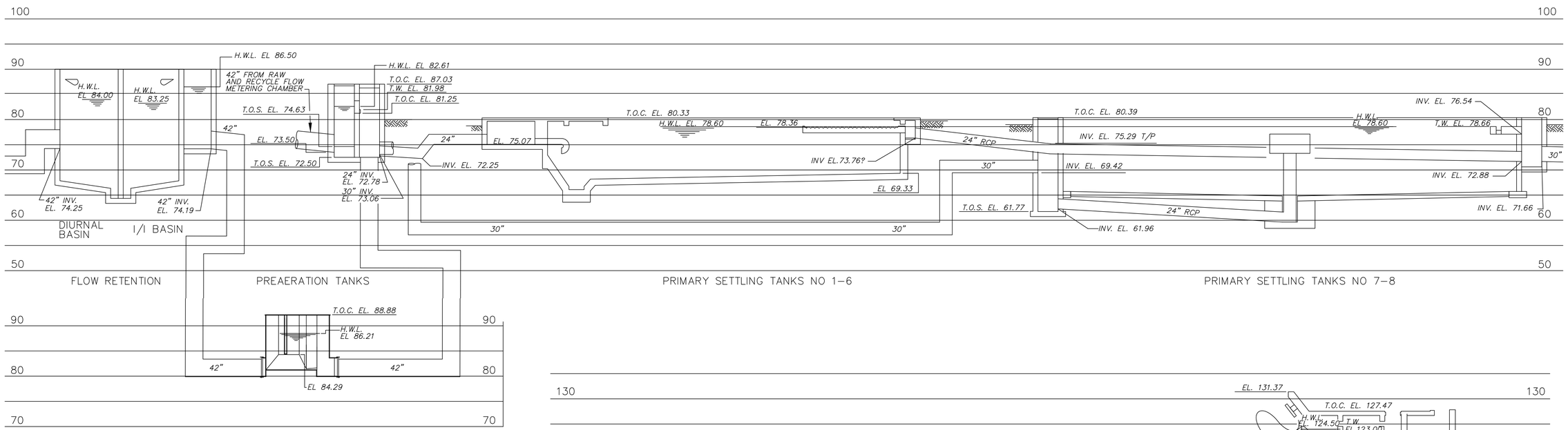

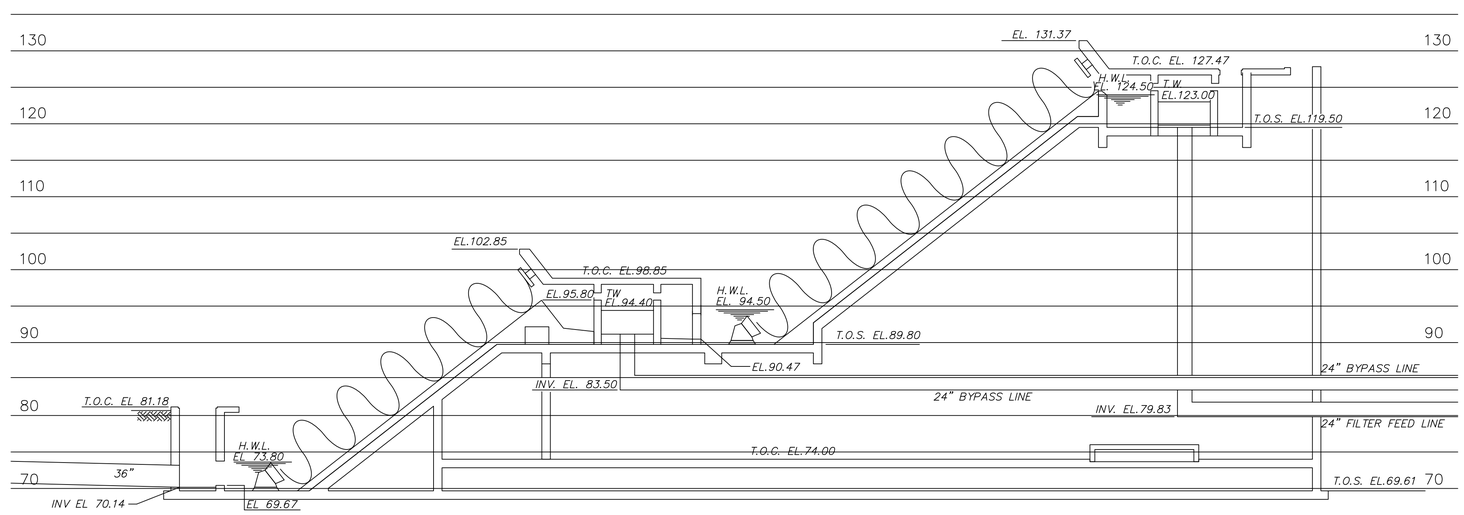

LEGEND:

EL.	ELEVATION
H.W.L.	HIGH WATER LEVEL
INV.	INVERT
T.O.C.	TOP OF CONCRETE
T.O.S.	TOP OF SLAB
T.W.	TOP OF WEIR

SCALE:

HORIZONTAL: NOT TO SCALE

VERTICAL: 1" = 10'

THESE RECORD DOCUMENTS HAVE BEEN PREPARED BASED ON INFORMATION PROVIDED BY OTHERS. CTI ENVIRONMENTAL HAS REVIEWED THE INFORMATION SUBMITTED AND BELIEVES IT REFLECTS THE WORK AS CONSTRUCTED. HOWEVER, ALL PERSONS SHALL VERIFY INFORMATION TAKEN FROM THIS DRAWING.

THIS DRAWING IS AN INSTRUMENT OF SERVICE OWNED BY CTI ENVIRONMENTAL, INC. WHICH SHALL BE DEEMED, AND REMAIN, THE PROPERTY OF CTI ENVIRONMENTAL, INC. AND COMMON LAW RIGHTS, INCLUDING COPYRIGHTS, ARE RESERVED. THIS DRAWING IS NOT TO BE REPRODUCED OR DISTRIBUTED TO OTHERS OR USED FOR ANY OTHER PURPOSE OR PROJECT WITHOUT PRIOR WRITTEN CONSENT OF CTI ENVIRONMENTAL, INC. CTI ENVIRONMENTAL, INC. CANNOT GUARANTEE THAT ELECTRONIC COPIES OF THIS DRAWING ARE EXACT REPRODUCTIONS OF THE SEALED ORIGINAL DRAWING. IN THE EVENT OF A CONFLICT BETWEEN AN ELECTRONIC COPY AND THE SEALED ORIGINAL, THE SEALED ORIGINAL

REVISIONS

NO.	DESCRIPTIONS	DATE	BY	APP'D
1	RECORD DRAWING	4/05	MGW	WAD

DESIGNED BY AJP
DRAWN BY AJP
CHECKED BY RWR
APPROVED BY

CTI ENVIRONMENTAL, INC.
ENGINEERS IN WATER AND EARTH SCIENCES
UNIONTOWN, OHIO

CITY OF MASSILLON, OHIO
WWTP UPGRADE 2000
LIQUID–HYDRAULIC PROFILE

JOB NO. E9031
DATE 08/13/01
SCALE AS NOTED
SHEET P10

E:/E9031/9031HYP1–3.D\