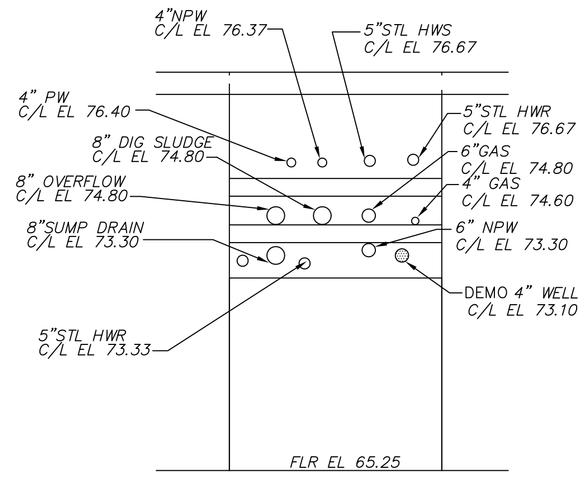

SECTION 5
SCALE : 1/4"=1'-0"

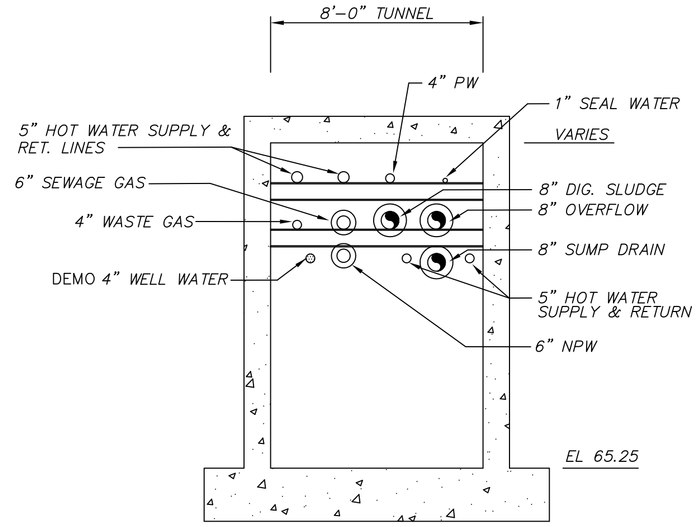

SECTION 2
SCALE : 1/4"=1'-0"

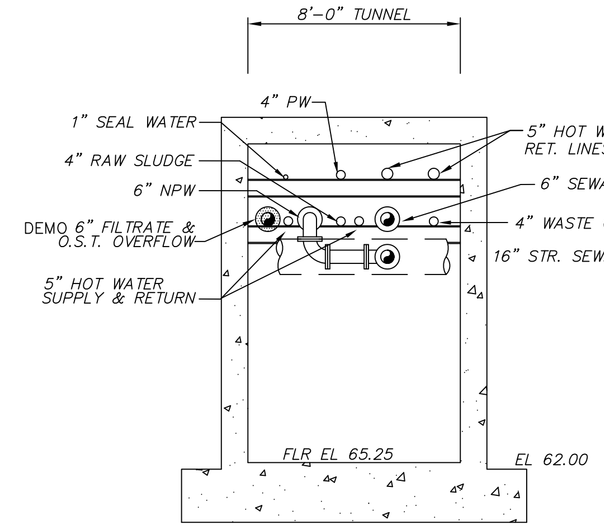

SECTION 3
SCALE : 1/4"=1'-0"

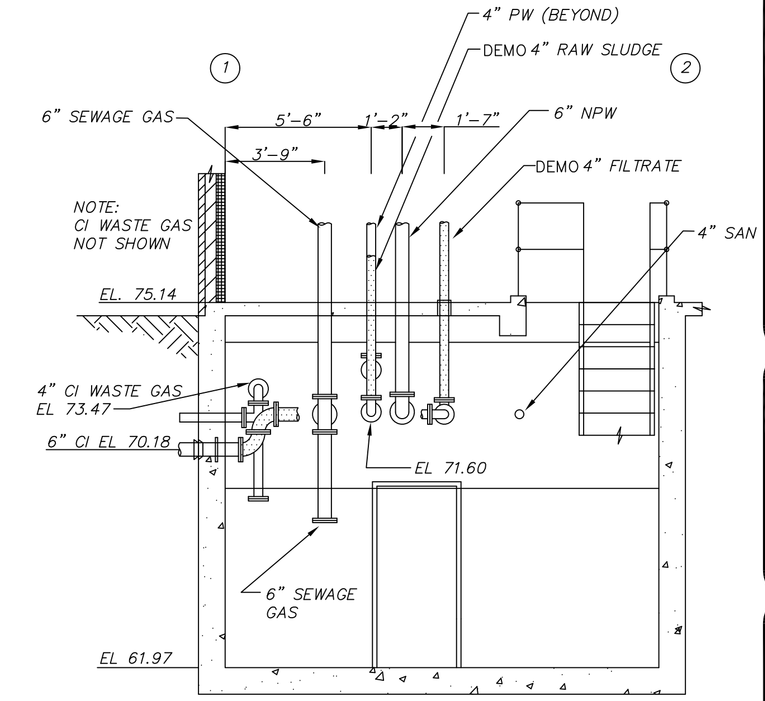

SECTION 4
SCALE : 1/4"=1'-0"

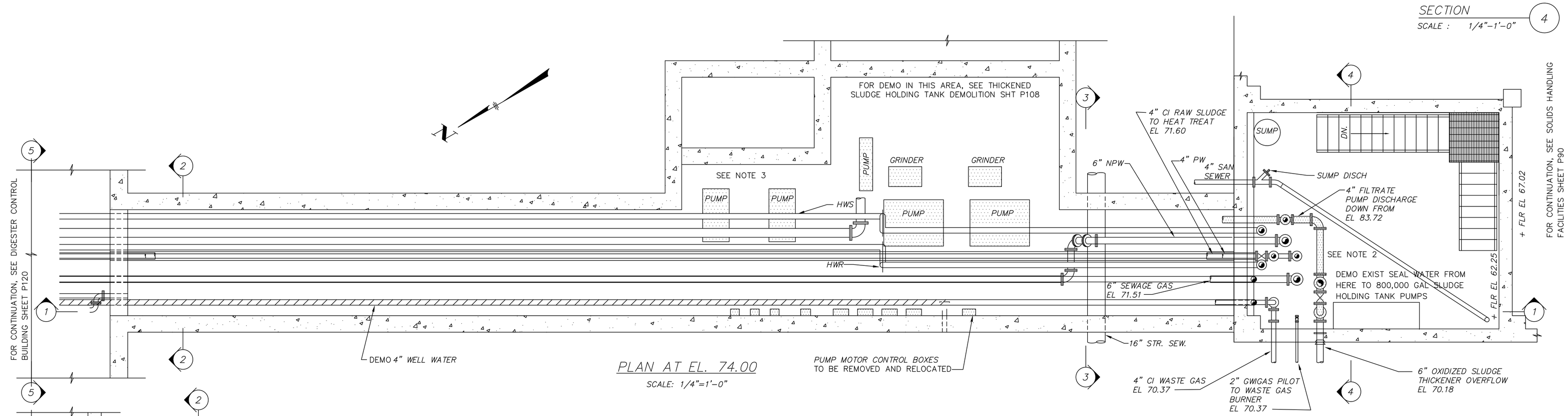

PLAN AT EL. 74.00
SCALE: 1/4"=1'-0"

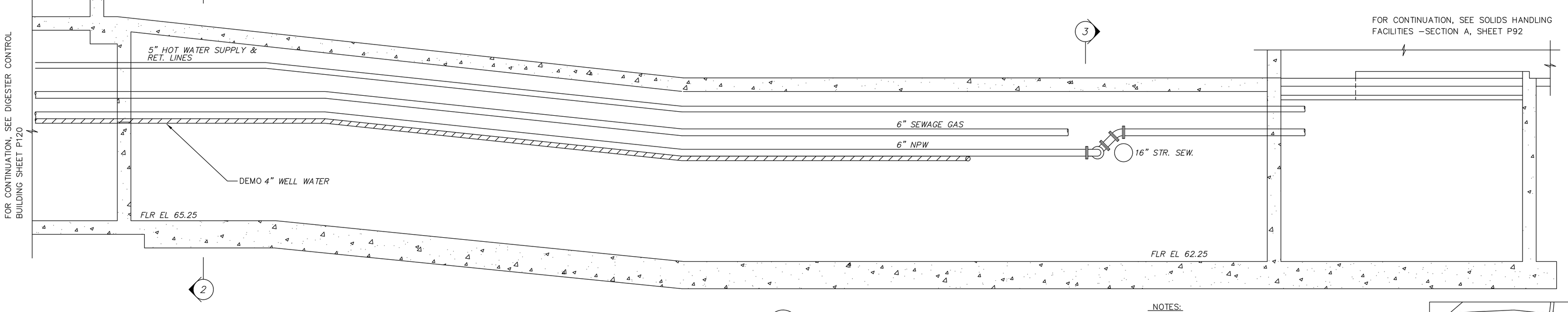

SECTION 1
SCALE : 1/4"=1'-0"

THESE RECORD DOCUMENTS HAVE BEEN PREPARED BASED ON INFORMATION PROVIDED BY OTHERS. CTI ENVIRONMENTAL HAS REVIEWED THE INFORMATION SUBMITTED AND BELIEVES IT REFLECTS THE WORK AS CONSTRUCTED. HOWEVER, ALL PERSONS SHALL VERIFY INFORMATION TAKEN FROM THIS DRAWING.

NOTES:

1. ITEMS FOR DEMOLITION
2. CONTRACTOR SHALL DISCONNECT AND DEMO EXIST. SEAL WATER LINE FROM 4" PW AND CAP.
3. CONTRACTOR SHALL DEMO SEAL WATER CONNECTED TO THE EXIST. 4" PW FOR EXIST. PUMPS (TYP.5)

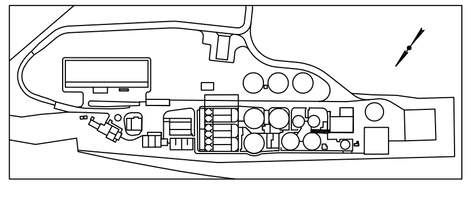

KEY PLAN

THIS DRAWING IS AN INSTRUMENT OF SERVICE OWNED BY CTI ENVIRONMENTAL, INC. WHICH SHALL BE DEEMED THE PROPERTY OF CTI ENVIRONMENTAL, INC. SUBJECT TO STATUTORY AND COMMON LAW RIGHTS, INCLUDING COPYRIGHTS. DISTRIBUTING, STORING, OR TRANSMITTING THIS DRAWING IN ANY FORM, OR REPRODUCING, COPIED, OR USED FOR ANY OTHER PURPOSE OR PROJECT WITHOUT PRIOR WRITTEN CONSENT OF CTI ENVIRONMENTAL, INC. IS PROHIBITED. CTI ENVIRONMENTAL, INC. CANNOT GUARANTEE THAT ELECTRONIC COPIES OF THIS DRAWING ARE EXACT COPIES OF THE SEALED ORIGINAL. IN THE EVENT OF A CONFLICT BETWEEN AN ELECTRONIC COPY AND THE SEALED ORIGINAL, THE SEALED ORIGINAL SHALL GOVERN.

REVISIONS

NO.	DESCRIPTIONS	DATE	BY	APP'D
1	RECORD DRAWINGS	1/25	MGW	WAD

DESIGNED BY AJP/TMK
DRAWN BY ELR/AJP
CHECKED BY RWR
APPROVED BY WAD

CTI ENVIRONMENTAL, INC.
ENGINEERS IN WATER AND EARTH SCIENCES
UNIONTOWN, OHIO

CITY OF MASSILLON, OHIO
WWTP UPGRADE 2000
TUNNEL PIPING PLAN AND SECTIONS DEMOLITION

JOB NO. E9031
DATE 08/13/01
SCALE AS NOTED
SHEET P106