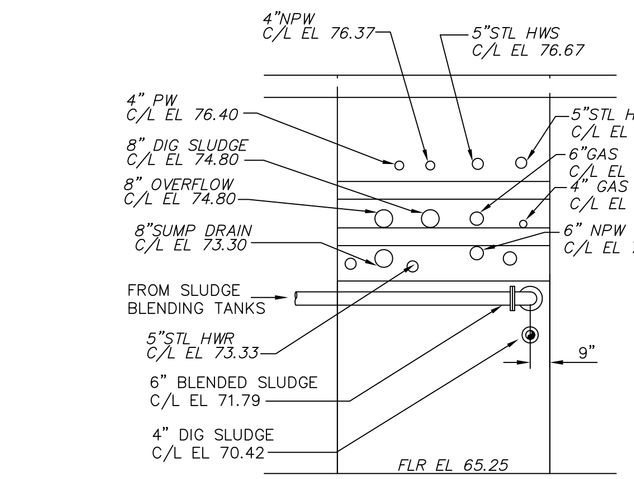

SECTION 5
SCALE : 1/4"=1'-0"

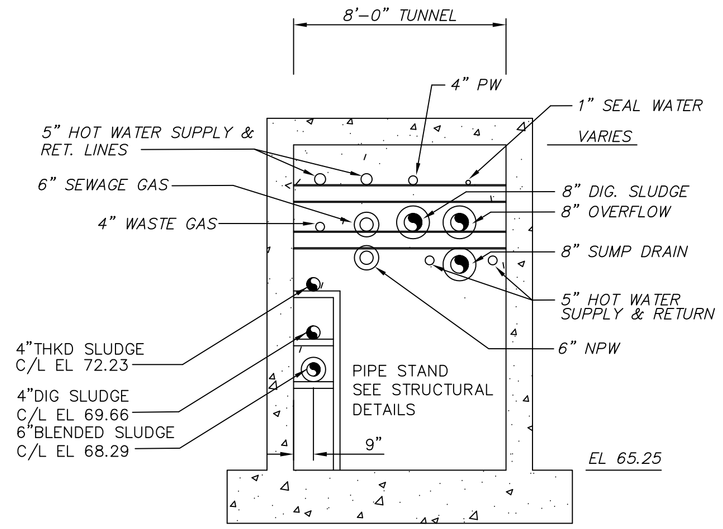

SECTION 2
SCALE : 1/4"=1'-0"

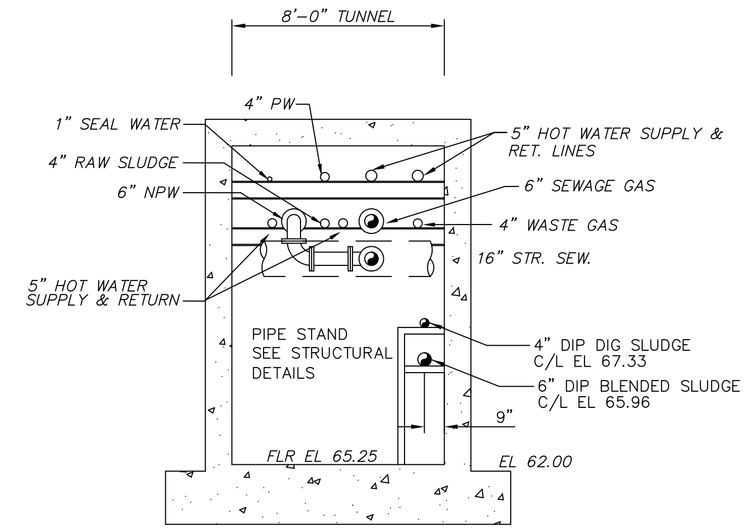

SECTION 3
SCALE : 1/4"=1'-0"

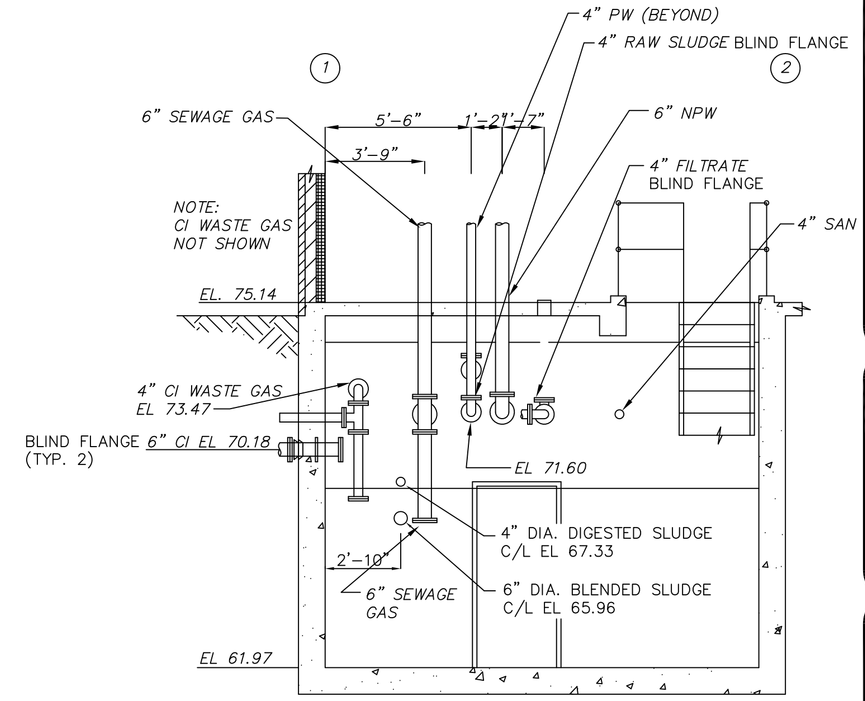

SECTION 4
SCALE : 1/4"=1'-0"

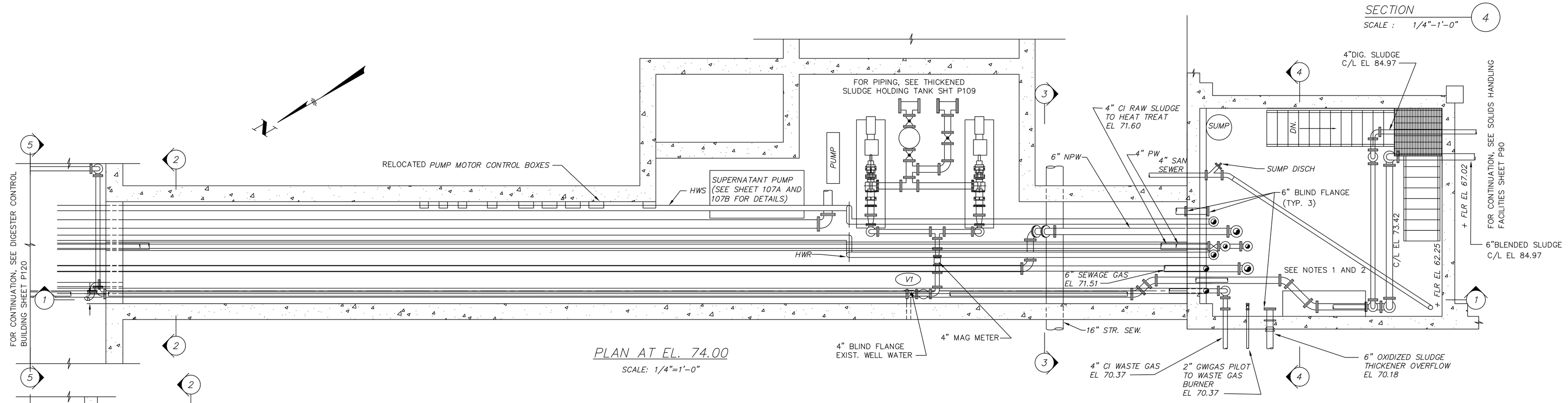

PLAN AT EL. 74.00
SCALE: 1/4"=1'-0"

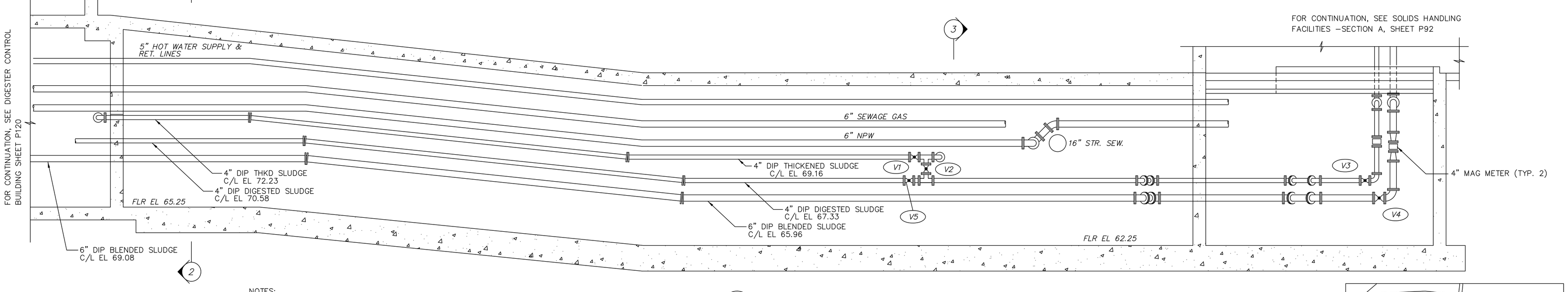

SECTION 1
SCALE : 1/4"=1'-0"

NOTES:

1. CONTRACTOR SHALL DISCONNECT EXIST. SEAL WATER LINE FROM 4" PW AND CAP.
2. CONTRACTOR SHALL TAP EXIST. 4" PW WITH 1 1/2" GALV. STL FOR HIGH PRESSURE WASH SYSTEM. SEE HIGH PRESSURE WASH SCHEMATIC SHEET P98.
3. CONTRACTOR SHALL CONNECT SEAL WATER FOR PROPOSED AND EXIST. PUMPS TO EXIST. 6" NPW (TYP. 5)

THESE RECORD DOCUMENTS HAVE BEEN PREPARED BASED ON INFORMATION PROVIDED BY OTHERS. CTI ENVIRONMENTAL HAS REVIEWED THE INFORMATION SUBMITTED AND BELIEVES IT REFLECTS THE WORK AS CONSTRUCTED. HOWEVER, ALL PERSONS SHALL VERIFY INFORMATION TAKEN FROM THIS DRAWING.

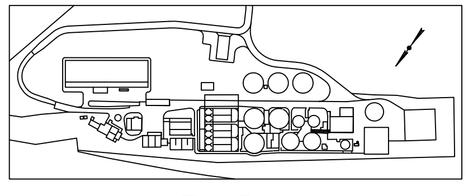

KEY PLAN

THIS DRAWING IS AN INSTRUMENT OF SERVICE OWNED BY CTI ENVIRONMENTAL, INC. WHICH SHALL BE DEEMED THE AUTHOR OF THE DOCUMENT WITHIN THE MEANING OF AND COMMON LAW RIGHTS, INCLUDING COPYRIGHTS. THIS DRAWING SHALL NOT BE SUBMITTED, COPIED, OR DISTRIBUTED TO OTHERS IN ANY FORM OR MANNER FOR ANY OTHER PURPOSE OR PROJECT WITHOUT PRIOR WRITTEN CONSENT OF CTI ENVIRONMENTAL, INC. CTI ENVIRONMENTAL, INC. CANNOT GUARANTEE THAT ELECTRONIC COPIES OF THIS DRAWING ARE EXACT COPIES OF THE SEALED ORIGINAL. IN THE EVENT OF A CONFLICT BETWEEN AN ELECTRONIC COPY AND THE SEALED ORIGINAL, THE SEALED ORIGINAL SHALL GOVERN.

REVISIONS

NO.	DESCRIPTIONS	DATE	BY	APP'D
1	RECORD DRAWING	5/05	BY	WAD

DESIGNED BY	AJP/TMK
DRAWN BY	ELR/AJP
CHECKED BY	RWR
APPROVED BY	WAD

CTI ENVIRONMENTAL, INC.
ENGINEERS IN WATER AND EARTH SCIENCES
UNIONTOWN, OHIO

CITY OF MASSILLON, OHIO
WWTP UPGRADE 2000
TUNNEL PIPING PLAN AND SECTIONS

JOB NO.	E9031
DATE	07/06/01
SCALE	AS NOTED
SHEET	P107

E: /E9031/9031TP2.DWG