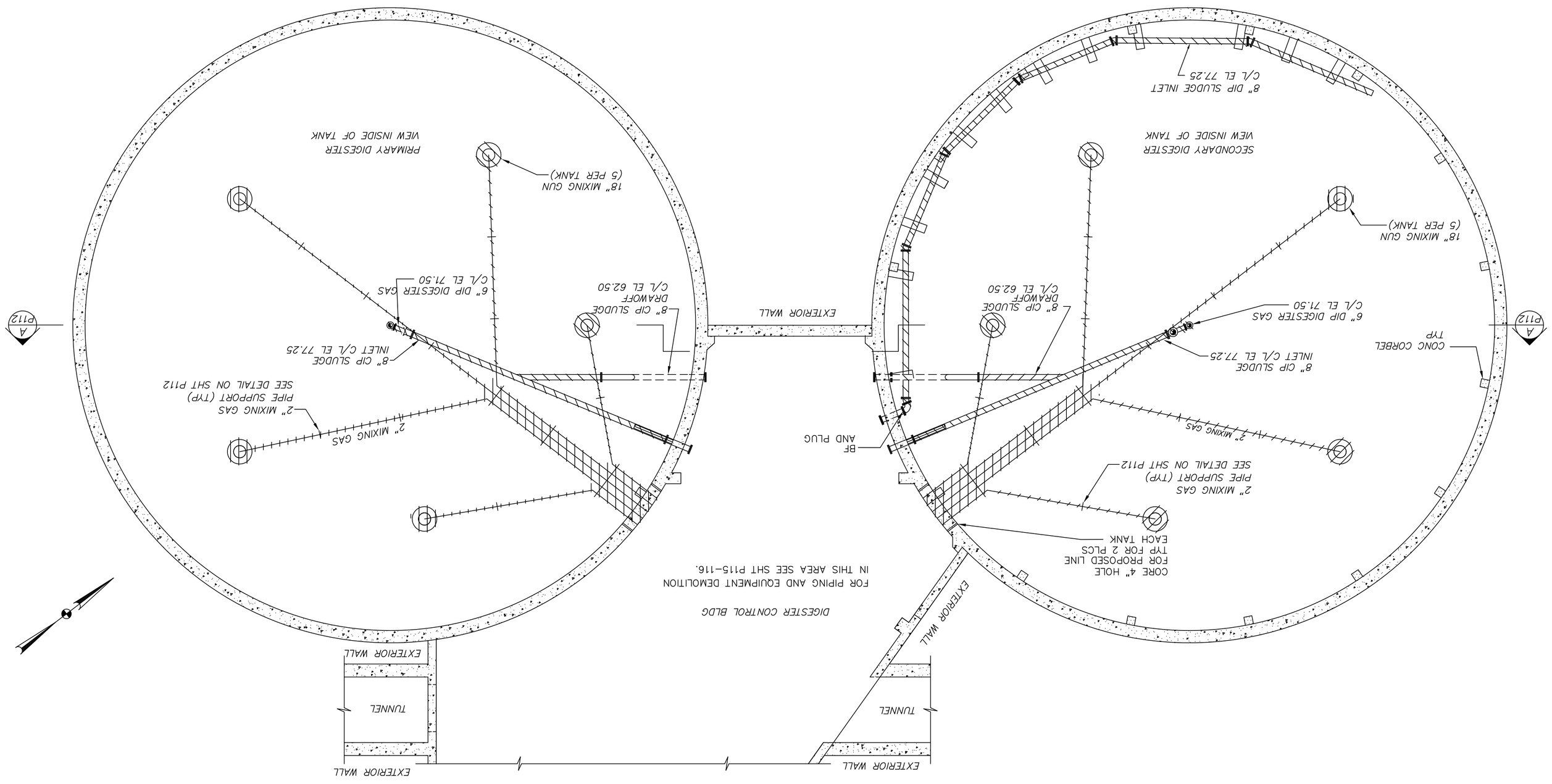

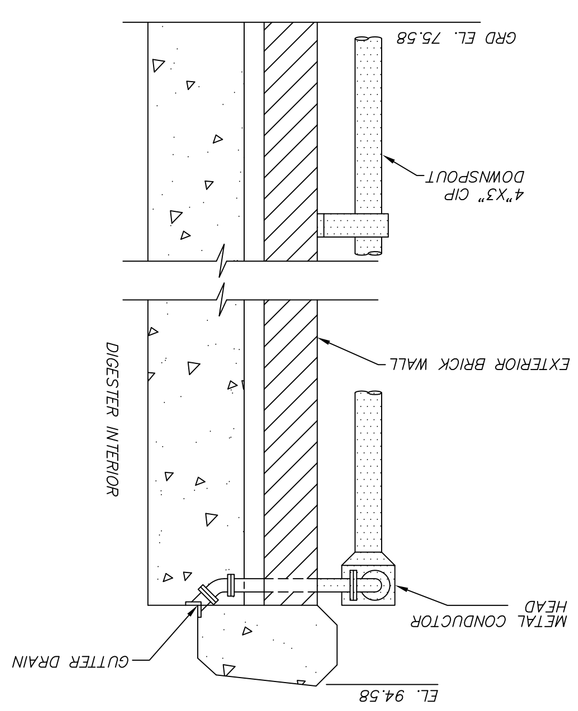

THESE RECORD DOCUMENTS HAVE BEEN PREPARED BASED ON INFORMATION PROVIDED BY OTHERS. CTI ENVIRONMENTAL HAS REVIEWED THE INFORMATION SUBMITTED AND BELIEVES IT REFLECTS THE WORK AS CONSTRUCTED. HOWEVER, ALL PERSONS SHALL VERIFY INFORMATION TAKEN FROM THIS DRAWING.

JOB NO.
E9031
DATE
08/13/01
SCALE
AS NOTED
SHEET
P111

ENVIRONMENTAL, INC.
ENGINEERS IN WATER AND EARTH SCIENCES
UNIONTOWN, OHIO

CITY OF MASSILLON, OHIO
WWTP UPGRADE 2000
ANAEROBIC DIGESTER PLAN AND DETAIL DEMOLITION

DESIGNED BY	AJP
DRAWN BY	SAT
CHECKED BY	AJP
APPROVED BY	RWR

REVISIONS

NO.	DESCRIPTIONS	DATE	BY	APP'D
1	ADDENDUM NO. 1	9/12	RWR	WAD
2	RECORD DRAWING	5/05	MGW	WAD

THIS DRAWING IS AN INSTRUMENT OF SERVICE OWNED BY CTI ENVIRONMENTAL, INC., WHICH SHALL BE DEEMED THE PROPERTY OF CTI ENVIRONMENTAL, INC. AND COMMON LAW RIGHTS, INCLUDING COPYRIGHTS. THIS DRAWING SHALL NOT BE REPRODUCED OR DISTRIBUTED TO OTHERS IN ANY FORM OR USED FOR ANY OTHER PURPOSE OR PROJECT WITHOUT PRIOR WRITTEN CONSENT OF CTI ENVIRONMENTAL, INC. CTI ENVIRONMENTAL, INC. CANNOT GUARANTEE THAT ELECTRONIC COPIES OF THIS DRAWING ARE EXACT DUPLICATES OF THE SEALED ORIGINAL DRAWING. IN THE EVENT OF A CONFLICT BETWEEN AN ELECTRONIC COPY AND THE SEALED ORIGINAL, THE SEALED ORIGINAL SHALL GOVERN.

E:/E9031/9031AD1-2.DWG