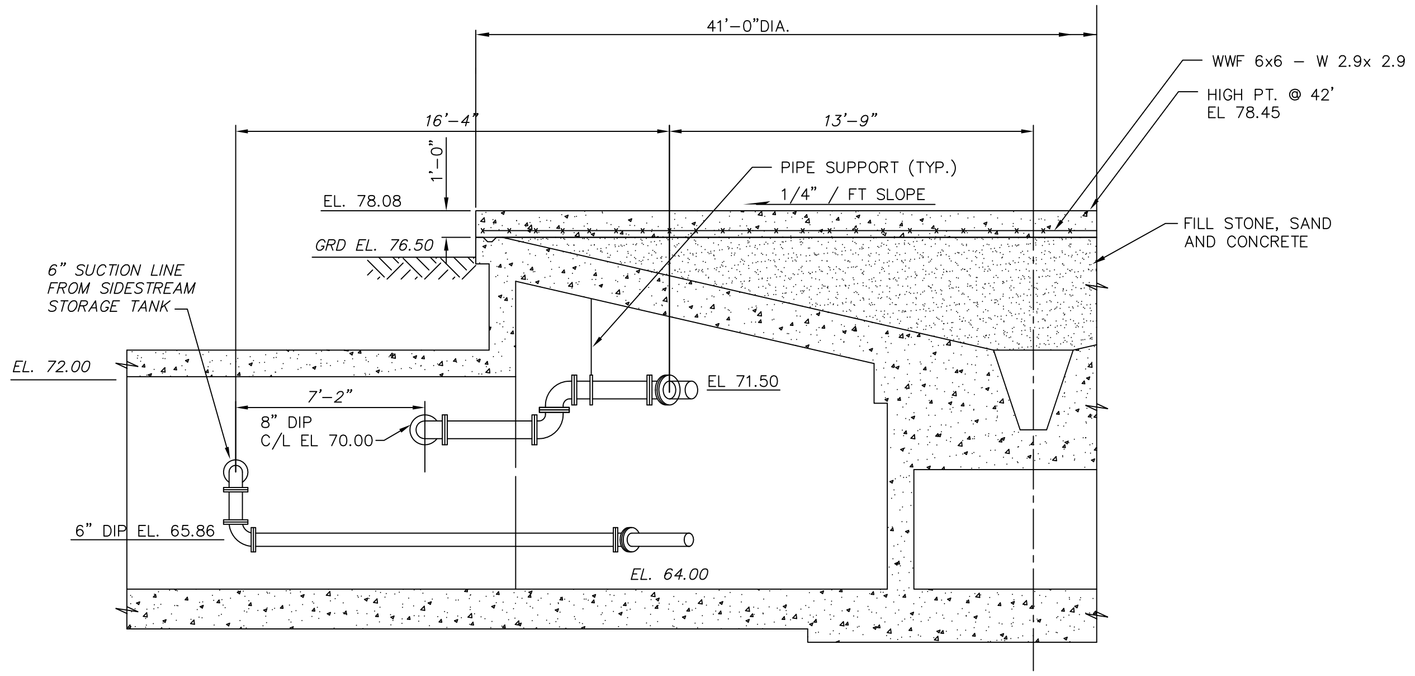

SECTION 1
SCALE : 1/4"=1'-0"

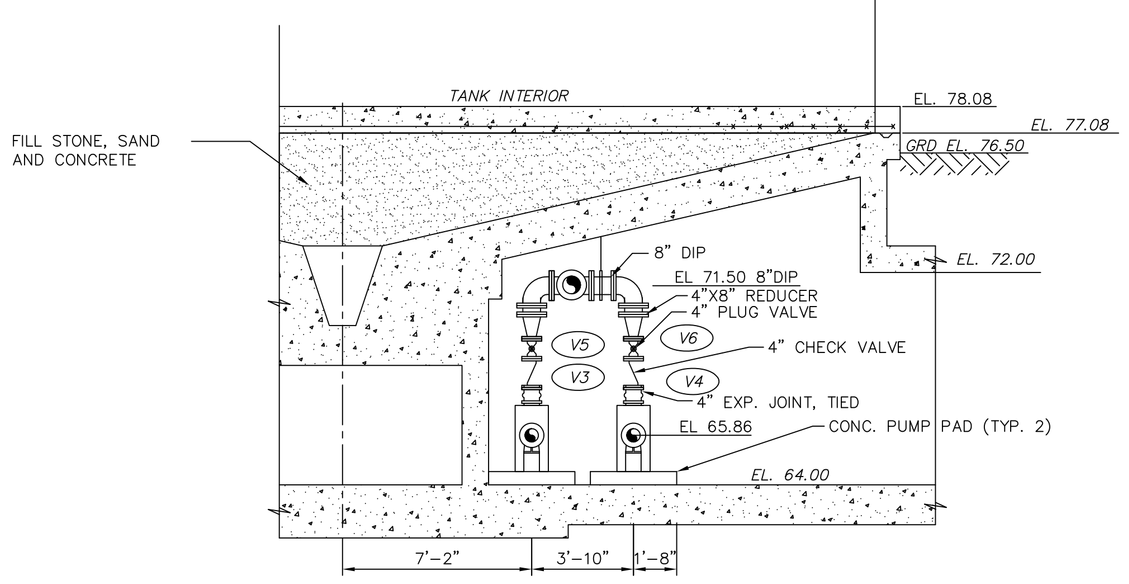

SECTION 2
SCALE : 1/4"=1'-0"

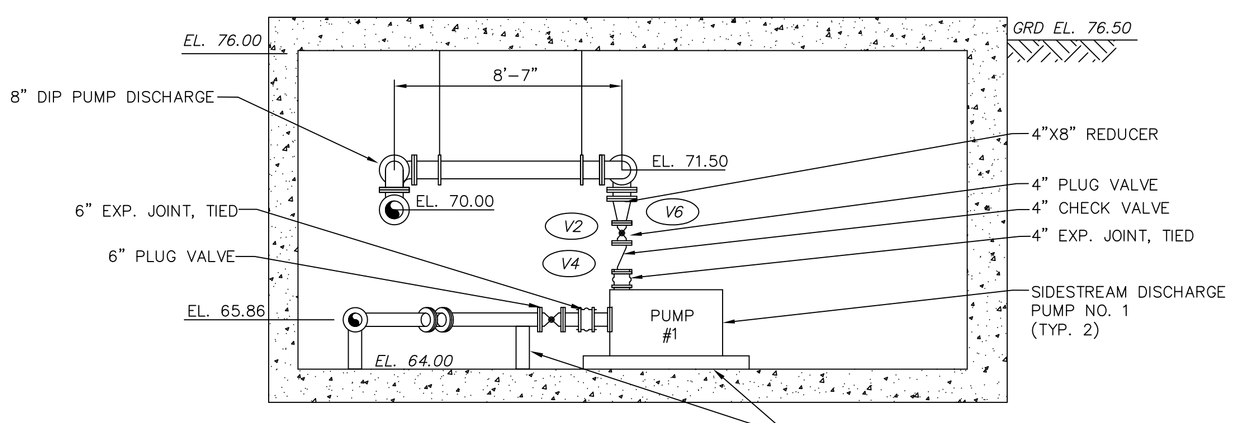

SECTION B
1/4"=1'-0"

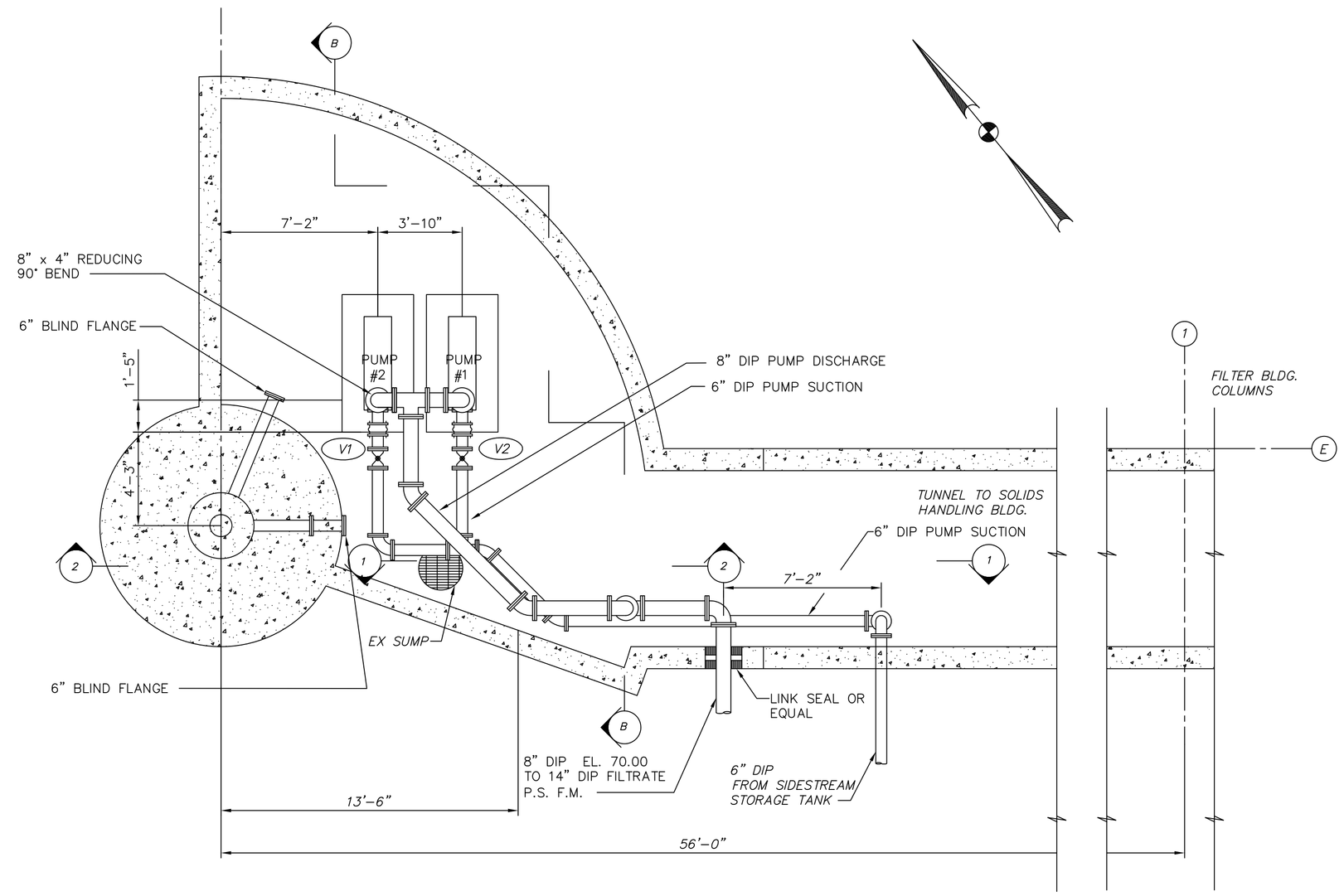

PLAN BELOW DEMOLISHED TANK
SCALE: 1/4"=1'-0"

NOTE:

1. INSTALL 1" GALV. STL SEAL WATER LINE FROM 4" NON-POTABLE WATER LINE IN THE SOLIDS HANDLING BLDG. TO THE PROPOSED SIDESTREAM DISCHARGE PUMPS.

THESE RECORD DOCUMENTS HAVE BEEN PREPARED BASED ON INFORMATION PROVIDED BY OTHERS. CTI ENVIRONMENTAL HAS REVIEWED THE INFORMATION SUBMITTED AND BELIEVES IT REFLECTS THE WORK AS CONSTRUCTED. HOWEVER, ALL PERSONS SHALL VERIFY INFORMATION TAKEN FROM THIS DRAWING.

THIS DRAWING IS AN INSTRUMENT OF SERVICE OWNED BY CTI ENVIRONMENTAL, INC. WHICH SHALL BE DEEMED THE AUTHOR AND PROPERTY OF CTI ENVIRONMENTAL, INC. WHICH SHALL RETAIN ALL STATUTORY AND COMMON LAW RIGHTS, INCLUDING COPYRIGHTS. THIS DRAWING SHALL NOT BE SOLD, REPRODUCED, OR DISTRIBUTED OUTSIDE THE ORIGINAL INTENDED PROJECT, OR ANY OTHER PURPOSE OR PROJECT WITHOUT PRIOR WRITTEN CONSENT OF CTI ENVIRONMENTAL, INC. CTI ENVIRONMENTAL, INC. CANNOT GUARANTEE THAT ELECTRONIC COPIES OF THIS DRAWING ARE EXACT COPIES OF THE ORIGINAL DRAWING. IN THE EVENT OF A CONFLICT BETWEEN AN ELECTRONIC COPY AND THE SEALED ORIGINAL, THE SEALED ORIGINAL SHALL GOVERN.

REVISIONS

NO.	DESCRIPTIONS	DATE	BY	APP'D
1	RECORD DRAWING	1/27	MGW	WAD

DESIGNED BY	MGW
DRAWN BY	SAT
CHECKED BY	RWR
APPROVED BY	WAD

CTI ENVIRONMENTAL, INC.
ENGINEERS IN WATER AND EARTH SCIENCES
UNIONTOWN, OHIO

CITY OF MASSILLON, OHIO
WWTP UPGRADE 2000
SIDESTREAM DISCHARGE PUMPS PLAN AND SECTIONS

JOB NO.	E9031
DATE	08/13/01
SCALE	1/4"=1'-0"
SHEET	P131