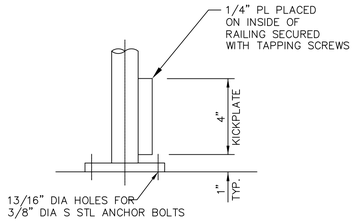

KICKPLATE DETAIL

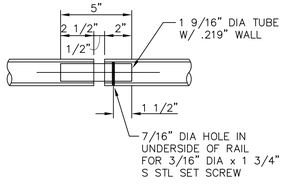

EXPANSION JOINT SPLICE

LOCATED @ 60'-0" MAXIMUM SPACING

NOTES:

1. CONTRACTOR TO REMOVE EXISTING GROUT AND HANDRAIL. PROPOSED HANDRAIL TO BE REGROUTED IN PLACE.
2. THIS DETAIL SHALL ALSO APPLY TO CONCRETE STAIRS AND FLOORS WITH NO CURB.

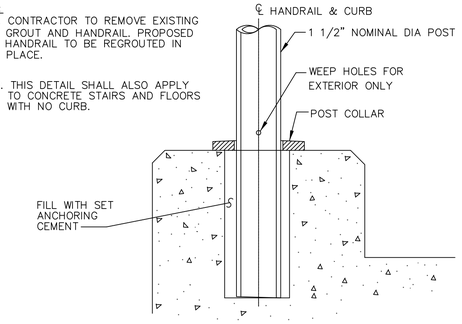

HANDRAIL FLOOR MOUNTING DETAIL

NTS

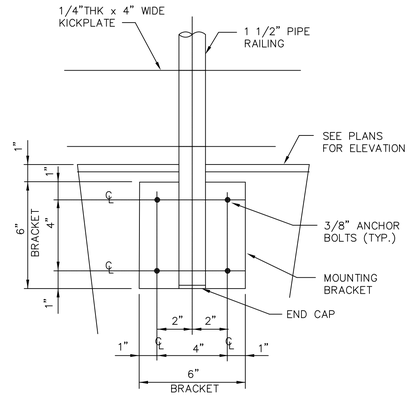

ELEVATION

HANDRAIL SIDE MOUNT DETAIL

NTS

SPECIFICATIONS

THE L1B AND L1D LADDERS AS MANUFACTURED BY HALLIDAY PRODUCTS, INC. OF ORLANDO, FLORIDA, SHALL BE CONSTRUCTED ENTIRELY OF ALUMINUM. THE RAILS SHALL BE 3/8" X 2 1/2" FLAT BAR AND SHALL BE SPACED 16" APART. THE WALL MOUNTED STANDOFFS SHALL BE 3/8" X 2 1/2" FLAT BAR AND WELDED TO THE RAILS AT A MAXIMUM OF 60" ON CENTER. THE STANDOFFS SHALL BE A MINIMUM OF 7" AND MANUFACTURED TO FIT FLUSH WITH THE WALL. 1 3/8" DIAMETER SLIP RESISTANT RIBBED RUNGS SHALL BE SPACED 12" ON CENTER AND SHALL BE WELDED TO THE INSIDE OF EACH RAIL.

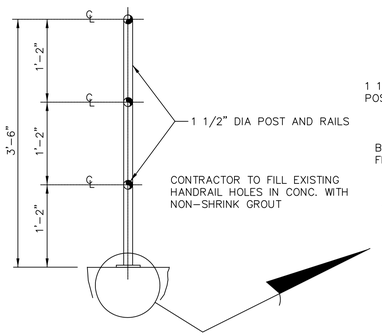

ELEVATION

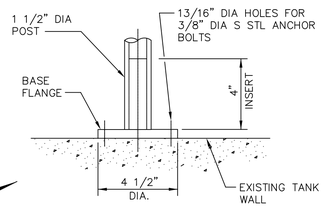

SECTION

FLUSH MOUNT DETAIL

HANDRAIL DETAILS

NTS

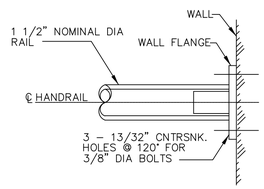

HANDRAIL WALL MOUNTING DETAIL

NTS

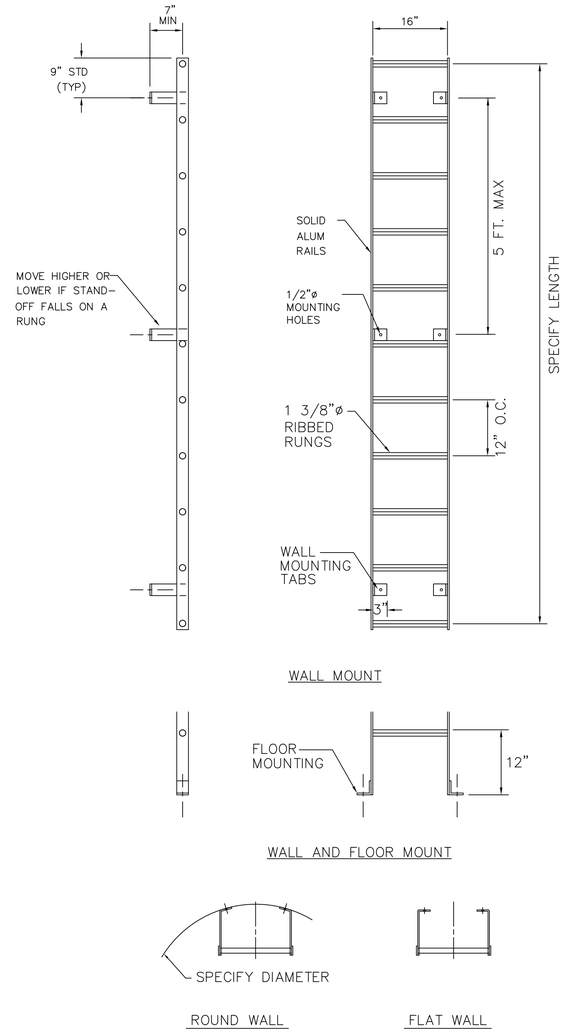

LADDER DETAIL

NTS

MAX. CLEAR SPAN	BEARING BAR DEPTH	ANGLE SIZE
LESS THAN 3'-0"	1 1/4"	1 1/2 x 1 1/2 x 1/4
3'-0" to 4'-0"	1 1/2"	1 3/4 x 1 3/4 x 1/4
4'-1" to 5'-0"	1 3/4"	2 x 2 x 1/4
5'-1" to 6'-0"	2"	2 1/4 x 2 1/4 x 1/4
6'-1" to 7'-0"	2 1/4"	2 1/2 x 2 1/2 x 1/4

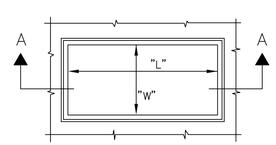

PLAN

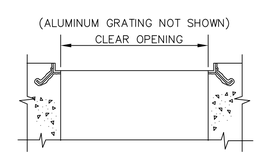

SECTION A-A

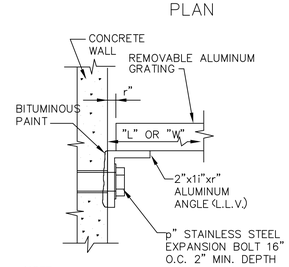

NOTE:
LENGTH OF ANGLE INSERTS TO BE DETERMINED BY AMOUNT OF GRATING USED; SIZE OF ANGLE INSERTS DETERMINED BY GRATING THICKNESS.

AT WALL

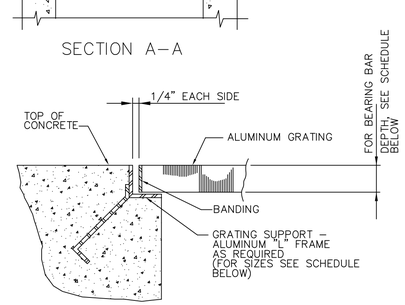

IN FLOOR

NOTE:

1. BITUMINOUS COATING REQUIRED ON ALL ALUMINUM SURFACES IN CONTACT WITH CONCRETE.
2. ALL GRATING SECTIONS TO BE BANDED.

FLOOR GRATING SUPPORTS

NTS

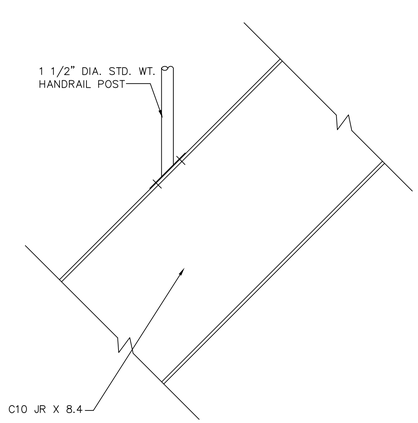

CONNECTION OF HANDRAIL POSTS ON STAIRS

NTS

THESE RECORD DOCUMENTS HAVE BEEN PREPARED BASED ON INFORMATION PROVIDED BY OTHERS. CTI ENVIRONMENTAL HAS REVIEWED THE INFORMATION SUBMITTED AND BELIEVES IT REFLECTS THE WORK AS CONSTRUCTED. HOWEVER, ALL PERSONS SHALL VERIFY INFORMATION TAKEN FROM THIS DRAWING.

THIS DRAWING IS AN INSTRUMENT OF SERVICE OWNED BY CTI ENVIRONMENTAL, INC. WHICH SHALL BE DEEMED THE AUTHOR OF THE DOCUMENT WITHIN THE STATUTORY AND COMMON LAW RIGHTS, INCLUDING COPYRIGHTS. THIS DRAWING SHALL NOT BE SUBMITTED, COPIED, OR DISTRIBUTED TO OTHERS, NOR SHALL IT BE USED FOR ANY OTHER PURPOSE OR PROJECT WITHOUT PRIOR WRITTEN CONSENT OF CTI ENVIRONMENTAL, INC. CTI ENVIRONMENTAL, INC. CANNOT GUARANTEE THAT ELECTRONIC COPIES OF THIS DRAWING ARE EXACT REPRODUCTIONS OF THE ORIGINAL DRAWING. IN THE EVENT OF A CONFLICT BETWEEN AN ELECTRONIC COPY AND THE ORIGINAL, THE SEALED ORIGINAL SHALL GOVERN.

REVISIONS

NO.	DESCRIPTIONS	DATE	BY	APP'D
1	RECORD DRAWING	6/05	MGW	WAD

DESIGNED BY AJP
DRAWN BY SAT
CHECKED BY WAD
APPROVED BY WAD

CTI ENVIRONMENTAL, INC.
ENGINEERS IN WATER AND EARTH SCIENCES
UNIONTOWN, OHIO

CITY OF MASSILLON, OHIO
WWTP UPGRADE 2000
DETAILS

JOB NO. E9031
DATE 08/13/01
SCALE AS NOTED
SHEET P139

E:/ E9031/DETAILS/P139.DWG