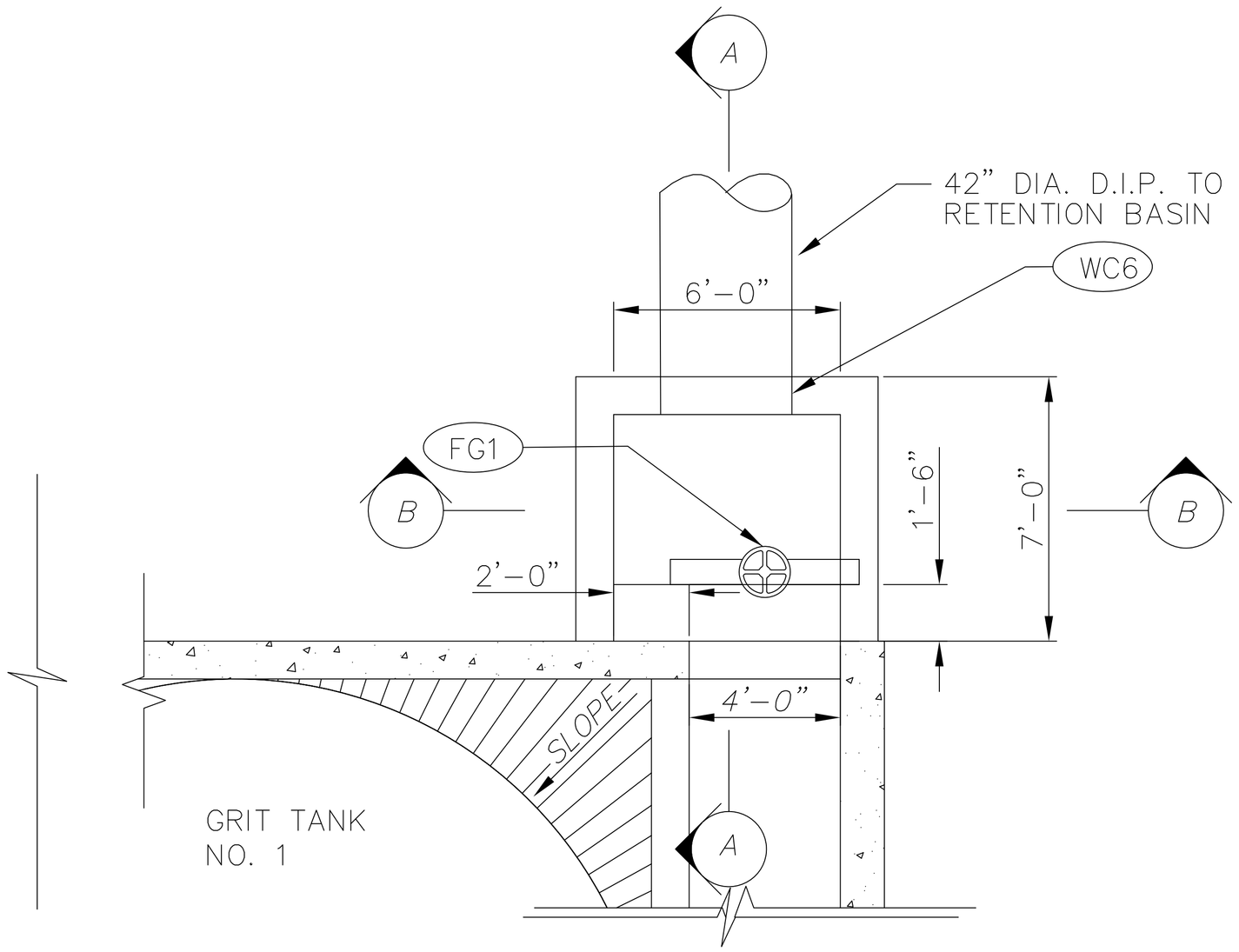

DETAIL PLAN VIEW OF
OUTLET AT GRIT CHAMBER

SCALE: 3/16" = 1'-0"

ADDENDUM NO. 3
CITY OF MASSILLON, OHIO WWTP UPGRADE 2000
CTi SK-P22-003