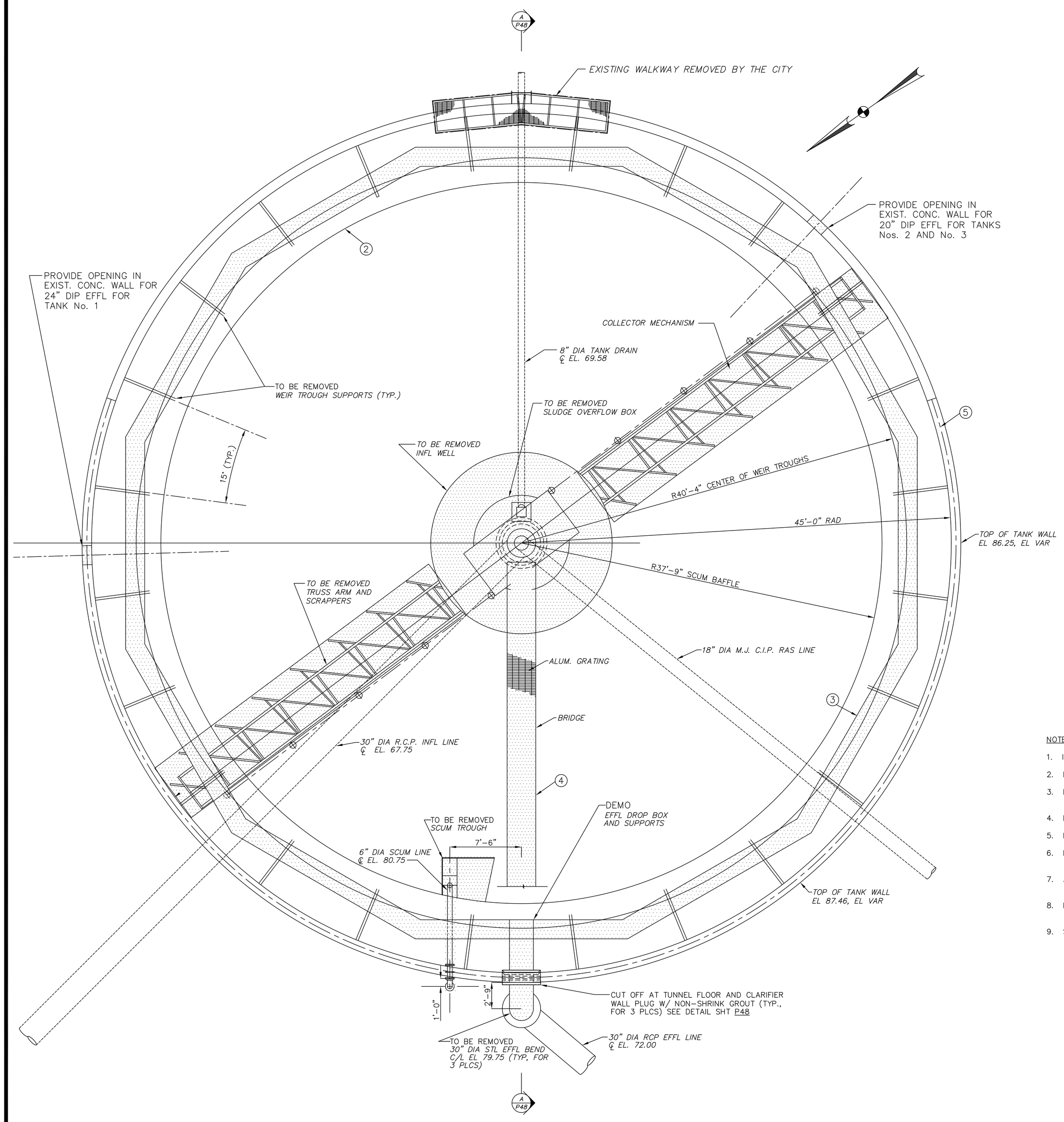

EXIST SECONDARY CLARIFIER No. 2 PLAN

SCALE: 3/16"=1'-0"

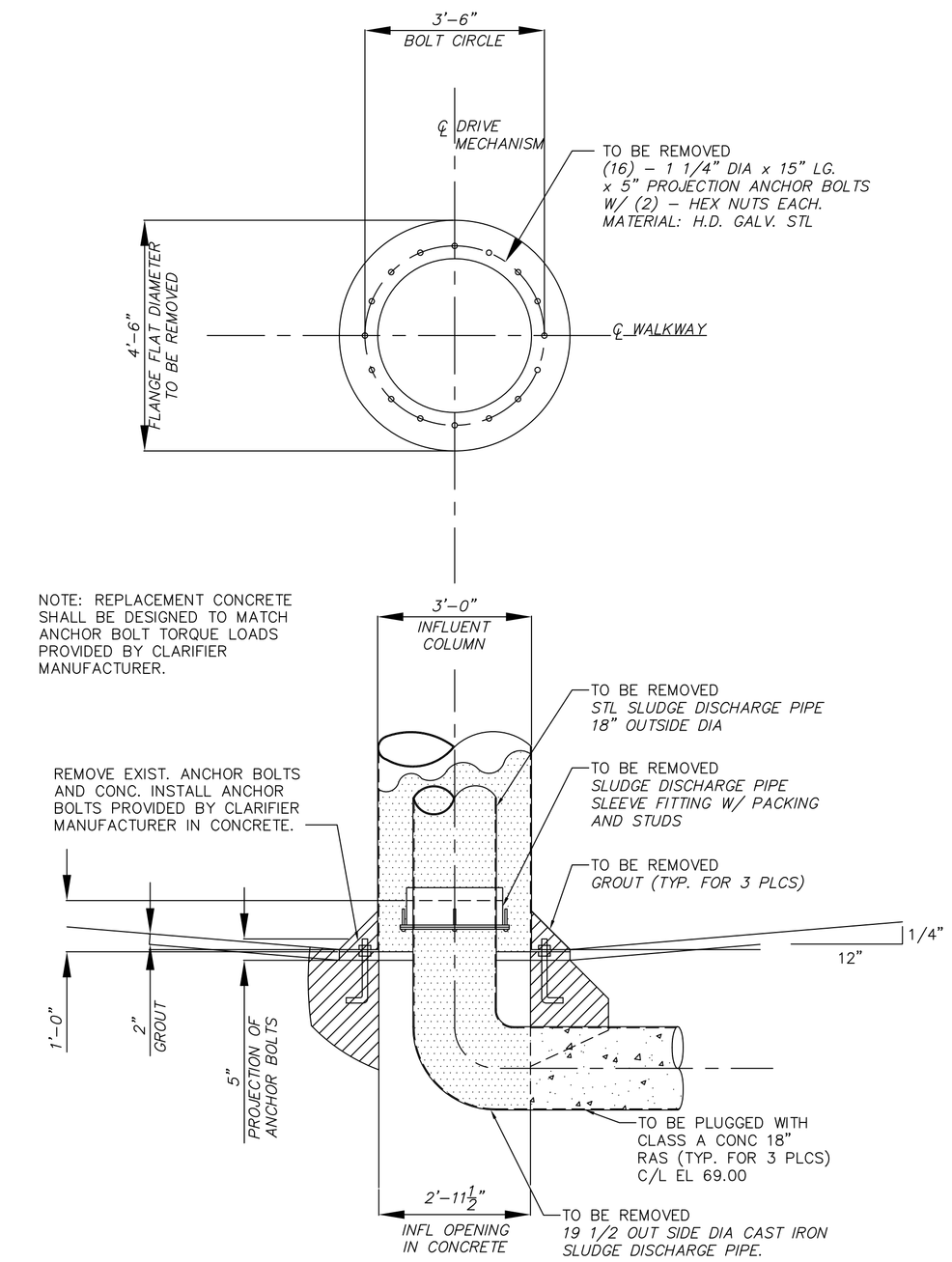

INFLUENT COLUMN DETAIL

SCALE: 1/4" = 1' – 0"

NOTES TO CONTRACTOR:

1. ITEMS FOR DEMO
2. EXIST STL SCUM BAFFLE AND SUPPORTS TO BE REMOVED.
3. EXIST FIBERGLASS EFFL WEIRS, SL TROUGHS AND SUPPORTS TO BE REMOVED.
4. EXIST STL WALKWAY AND HANDRAIL TO BE REMOVED.
5. EXIST PAINTED SL HANDRAIL TO BE REMOVED.
6. EXIST INFL FEED WELL, SLUDGE COLLECTION EQUIPMENT, CENTER COLUMN AND SCUM COLLECTION EQUIPMENT INCLUDING BEACH TO BE REMOVED.
7. ALL SECONDARY CLARIFIER DEMOLITION WORK IS TYPICAL FOR SECONDARY CLARIFIERS No. 1,2 AND 3.
8. EXIST 2" GROUT SHALL BE REMOVED AT THE ENTIRE CLARIFIER SLAB CONC SURFACE, ALL EXIST CLARIFIERS.
9. SEE PIPING AND BRIDGE LAYOUT ON SHEET P51.

THESE RECORD DOCUMENTS HAVE BEEN PREPARED BASED ON INFORMATION PROVIDED BY OTHERS. CTI ENVIRONMENTAL HAS REVIEWED THE INFORMATION SUBMITTED AND BELIEVES IT REFLECTS THE WORK AS CONSTRUCTED. HOWEVER, ALL PERSONS SHALL VERIFY INFORMATION TAKEN FROM THIS DRAWING.

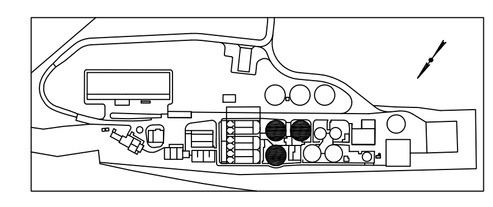

KEY PLAN

THIS DRAWING IS AN INSTRUMENT OF SERVICE OWNED BY CTI ENVIRONMENTAL, INC. WHICH SHALL BE DEEMED THE AUTHOR AND SHALL RETAIN ALL STATUTORY AND COMMON LAW RIGHTS, INCLUDING COPYRIGHTS. DISTRIBUTING, SHARING IN ANY FORM, REPRODUCING, DISTRIBUTED, COPIED, OR USED FOR ANY OTHER PURPOSE OR PROJECT WITHOUT PRIOR WRITTEN CONSENT OF CTI ENVIRONMENTAL, INC. CTI ENVIRONMENTAL, INC. CANNOT GUARANTEE THAT ELECTRONIC COPIES OF THIS DRAWING ARE EXACT COPIES OF THE SEALED ORIGINAL. IN THE EVENT OF A CONFLICT BETWEEN AN ELECTRONIC COPY AND THE SEALED ORIGINAL, THE SEALED ORIGINAL SHALL GOVERN.

REVISIONS

NO.	DESCRIPTIONS	DATE	BY	APP'D
1	RECORD DRAWING	4/05	MGW	WAD

DESIGNED BY MGW
DRAWN BY SAT
CHECKED BY MGW
APPROVED BY WAD

CTI ENVIRONMENTAL, INC.
ENGINEERS IN WATER AND EARTH SCIENCES
UNIONTOWN, OHIO

CITY OF MASSILLON, OHIO
WWTP UPGRADE 2000
EXISTING SECONDARY CLARIFIERS DEMOLITION PLAN

JOB NO. E9031
DATE 08/13/01
SCALE AS NOTED
SHEET P47

E:/E9031/9031SCR1.DWG