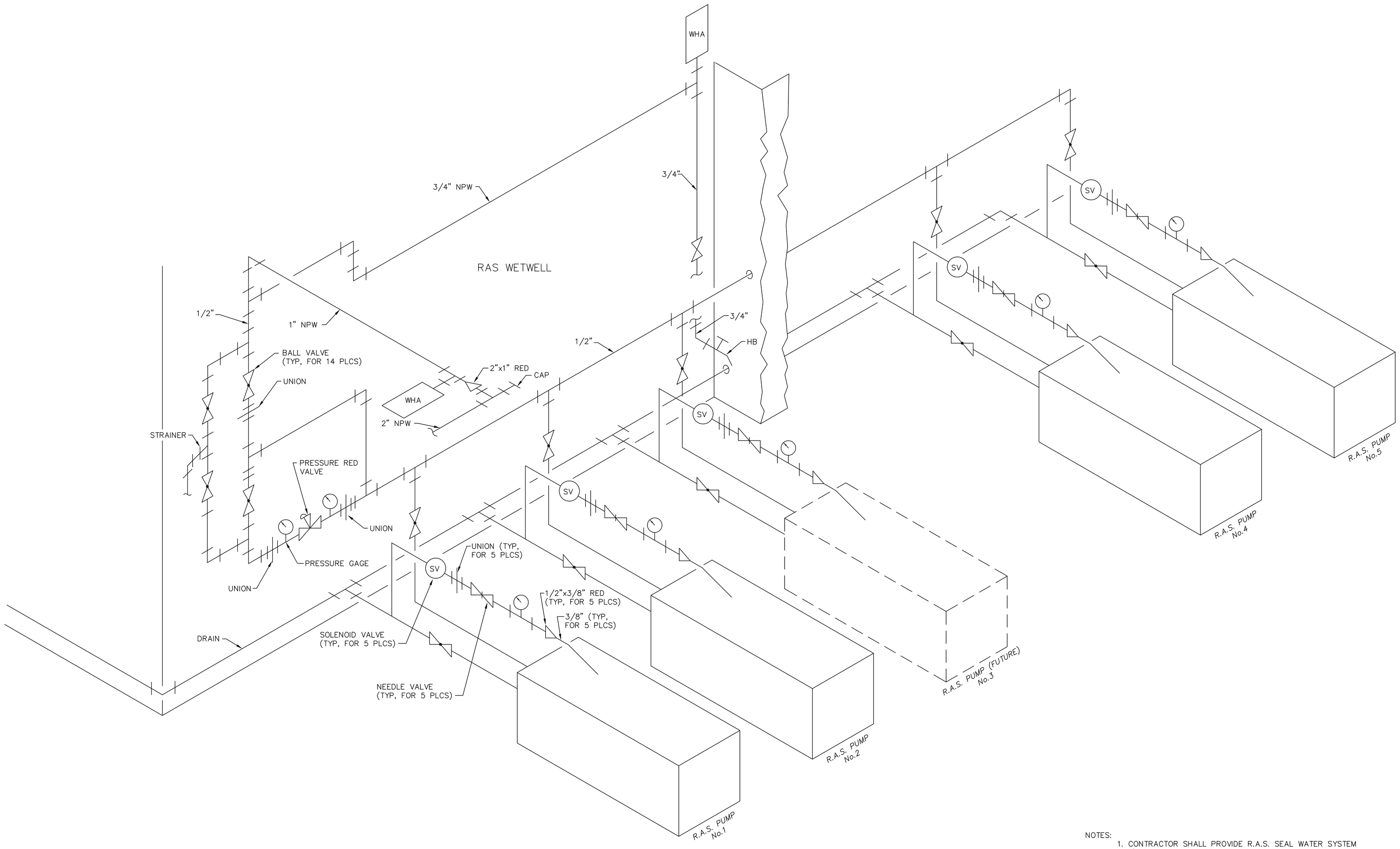

NOTES:

1. CONTRACTOR SHALL PROVIDE R.A.S. SEAL WATER SYSTEM (INCLUDING ALL PIPE FITTINGS, SOLENOID VALVE, AND APPURTENANCES) COMPLETE TO TEMPORARY R.A.S. PUMP. FOLLOWING RELOCATION OF TEMPORARY R.A.S. PUMP, THE TEMPORARY R.A.S. SEAL WATER SYSTEM SHALL BE REMOVED TO A LOCATION DETERMINED BY ENGINEER AND PLUGGED.
2. CONTRACTOR SHALL ROUTE STRAINER FLUSHING PIPING TO R.A.S. SEAL WATER DRAIN PIPING.

R.A.S. PUMP SEAL WATER SCHEMATIC SECONDARY TUNNEL

NTS

THESE RECORD DOCUMENTS HAVE BEEN PREPARED BASED ON INFORMATION PROVIDED BY OTHERS. CTI ENVIRONMENTAL HAS REVIEWED THE INFORMATION SUBMITTED AND BELIEVES IT REFLECTS THE WORK AS CONSTRUCTED. HOWEVER, ALL PERSONS SHALL VERIFY INFORMATION TAKEN FROM THIS DRAWING.

THIS DRAWING IS AN INSTRUMENT OF SERVICE OWNED BY CTI ENVIRONMENTAL, INC. WHICH SHALL BE DEEMED THE AUTHOR AND WHICH SHALL RETAIN ALL STATUTORY AND COMMON LAW RIGHTS, INCLUDING COPYRIGHTS. THIS DRAWING SHALL NOT BE SUBMITTED, COPIED, OR DISTRIBUTED TO OTHERS IN ANY FORM OR MANNER FOR ANY OTHER PURPOSE OR PROJECT WITHOUT PRIOR WRITTEN CONSENT OF CTI ENVIRONMENTAL, INC. CTI ENVIRONMENTAL, INC. CANNOT GUARANTEE THAT ELECTRONIC COPIES OF THIS DRAWING ARE EXACT COPIES OF THE SEALED ORIGINAL. IN THE EVENT OF A CONFLICT BETWEEN AN ELECTRONIC COPY AND THE SEALED ORIGINAL, THE SEALED ORIGINAL SHALL GOVERN.

REVISIONS

NO.	DESCRIPTIONS	DATE	BY	APP'D
1	RECORD DRAWING	3/2	MGW	WAD

DESIGNED BY	MGW
DRAWN BY	SAT
CHECKED BY	MGW
APPROVED BY	WAD

CTI ENVIRONMENTAL, INC.
ENGINEERS IN WATER AND EARTH SCIENCES
UNIONTOWN, OHIO

CITY OF MASSILLON, OHIO
WWTP UPGRADE 2000
RAS PUMP SEAL WATER SCHEMATIC

JOB NO.	E9031
DATE	07/06/01
SCALE	NOT TO SCALE
SHEET	P61

E:/E9031/9031RAS5.DWG