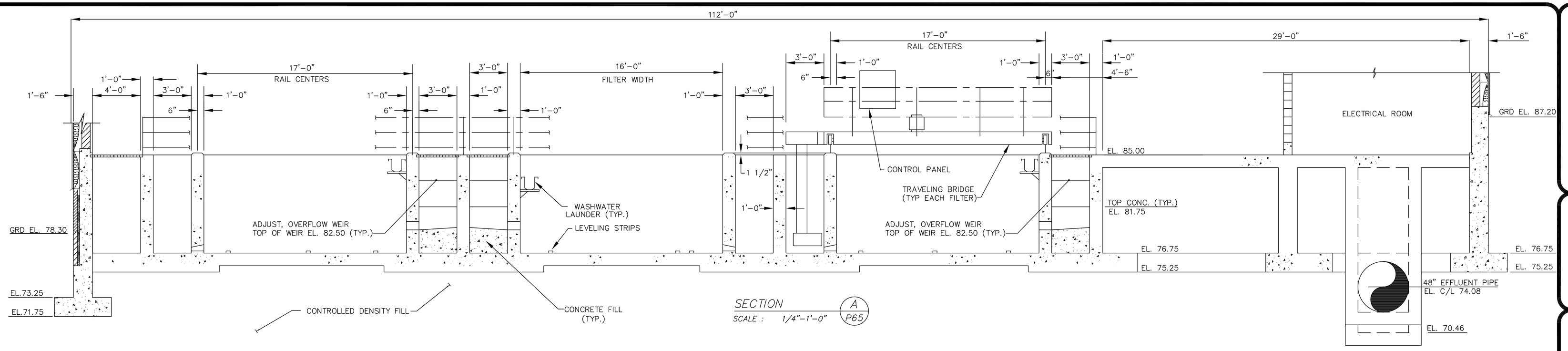

SECTION A P65
SCALE : 1/4"-1'-0"

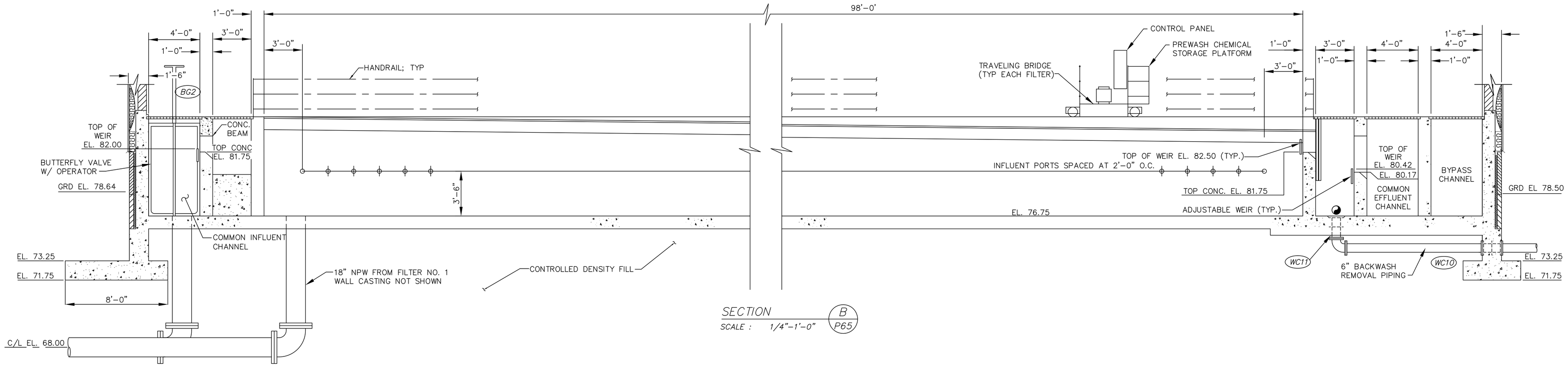

SECTION B P65
SCALE : 1/4"-1'-0"

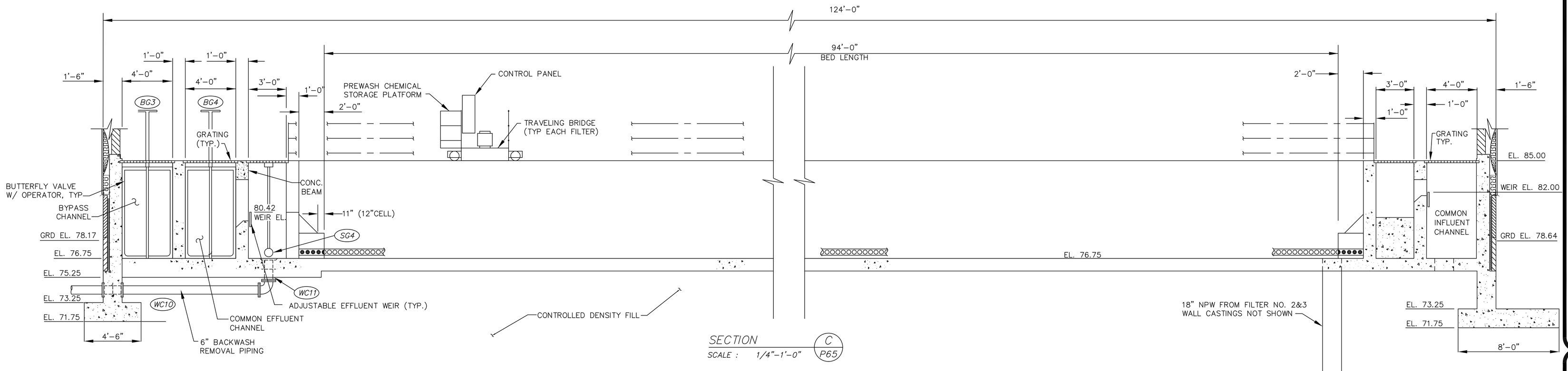

SECTION C P65
SCALE : 1/4"-1'-0"

NOTE:
1. ALL BURIED PIPE FITTINGS SHOWN ON THIS SHEET AS FLANGED TO BE MECHANICAL JOINT.
2. EXCAVATION LIMIT FOR PLACEMENT OF CONTROLED DENSITY FILL SHALL BE EL 68.00.

THESE RECORD DOCUMENTS HAVE BEEN PREPARED BASED ON INFORMATION PROVIDED BY OTHERS. CTI ENVIRONMENTAL HAS REVIEWED THE INFORMATION SUBMITTED AND BELIEVES IT REFLECTS THE WORK AS CONSTRUCTED. HOWEVER, ALL PERSONS SHALL VERIFY INFORMATION TAKEN FROM THIS DRAWING.

THIS DRAWING IS AN INSTRUMENT OF SERVICE OWNED BY CTI ENVIRONMENTAL, INC. WHICH SHALL BE DEEMED THE AUTHOR OF THE WORK WITHIN THE MEANING OF STATUTORY AND COMMON LAW RIGHTS, INCLUDING COPYRIGHTS. THIS DRAWING SHALL NOT BE SUBMITTED, REPRODUCED, OR DISTRIBUTED TO ANY PERSON OR ENTITY OTHER THAN THE OWNER FOR ANY OTHER PURPOSE OR PROJECT WITHOUT PRIOR WRITTEN CONSENT OF CTI ENVIRONMENTAL, INC. CTI ENVIRONMENTAL, INC. CANNOT GUARANTEE THAT ELECTRONIC COPIES OF THIS DRAWING ARE EXACT REPRODUCTIONS OF THE SEALED ORIGINAL. IN THE EVENT OF A CONFLICT BETWEEN AN ELECTRONIC COPY AND THE SEALED ORIGINAL, THE SEALED ORIGINAL SHALL GOVERN.

REVISIONS

NO.	DESCRIPTIONS	DATE	BY	APP'D
1	ADDENDUM NO. 1	9/14	MGW	WAD
2	RECORD DRAWING	3/11	MGW	WAD

DESIGNED BY MGW
DRAWN BY SAT
CHECKED BY MGW
APPROVED BY WAD

CTI ENVIRONMENTAL, INC.
ENGINEERS IN WATER AND EARTH SCIENCES
UNIONTOWN, OHIO

CITY OF MASSILLON, OHIO
WWTP UPGRADE 2000
TERTIARY FILTERS/UV DISINFECTION SECTIONS

JOB NO. E9031
DATE 08/13/01
SCALE 1/4"=1'-0"
SHEET P67

E: /9031/9031TFB3.DWG