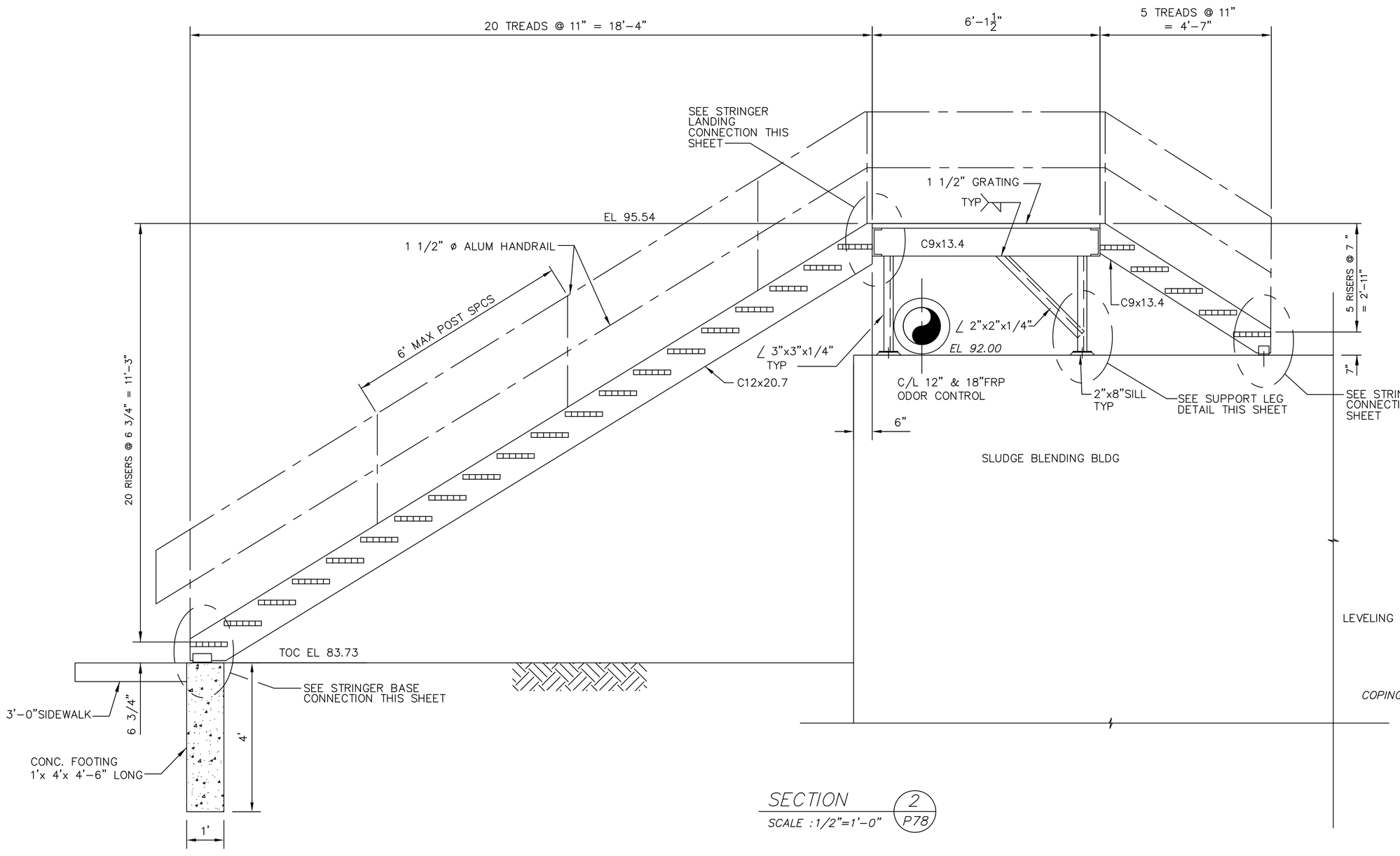

SECTION 2/P78
SCALE :1/2"=1'-0"

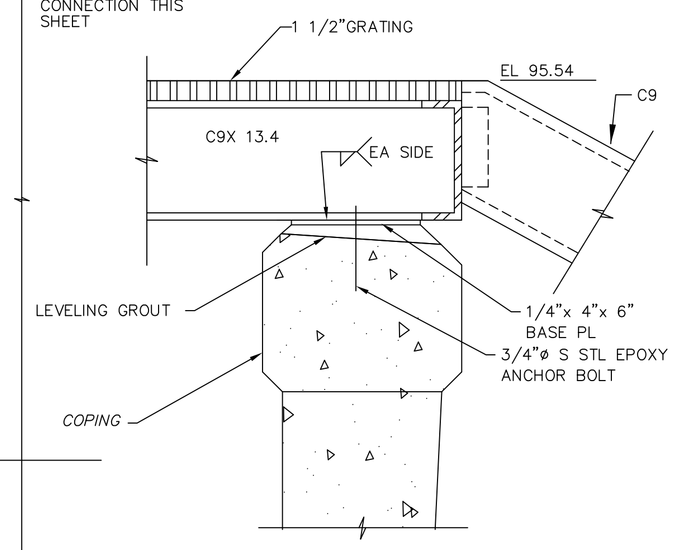

DETAIL 1
SCALE: 1 1/2"=1'-0"

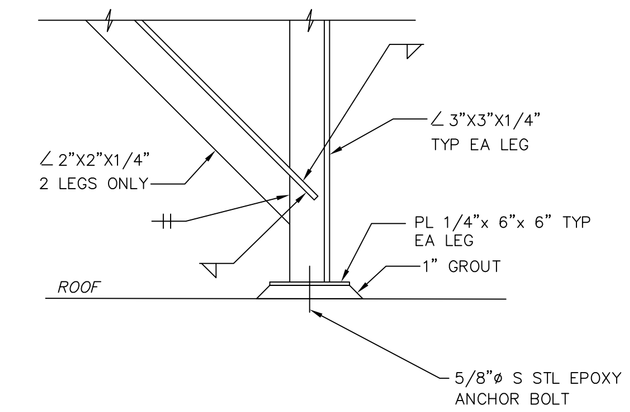

TYPICAL SUPPORT LEG
SCALE: 1 1/2"=1'-0"

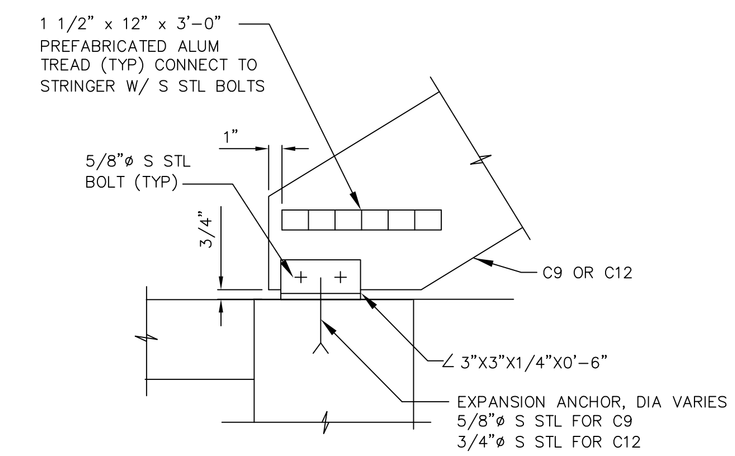

TYPICAL STRINGER BASE CONNECTION
SCALE: 1 1/2"=1'-0"
BEARING ON CONCRETE

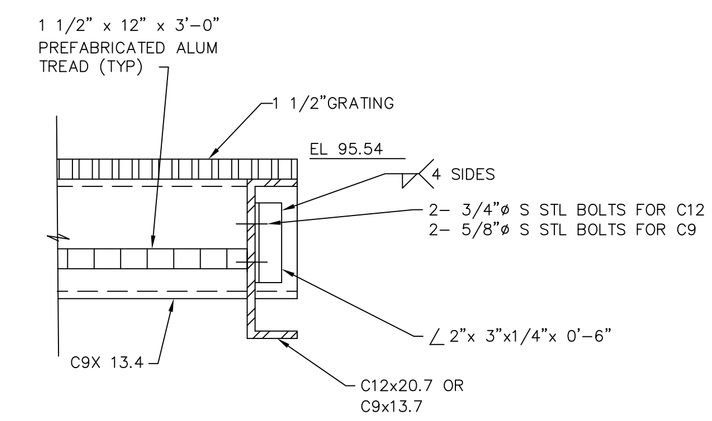

TYPICAL STRINGER LANDING CONNECTION
SCALE: 1 1/2"=1'-0"

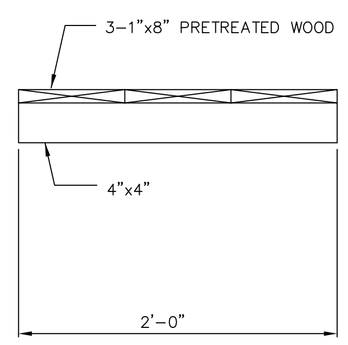

ELEVATION WOODEN WALKWAY
SCALE: 1 1/2"=1'-0"

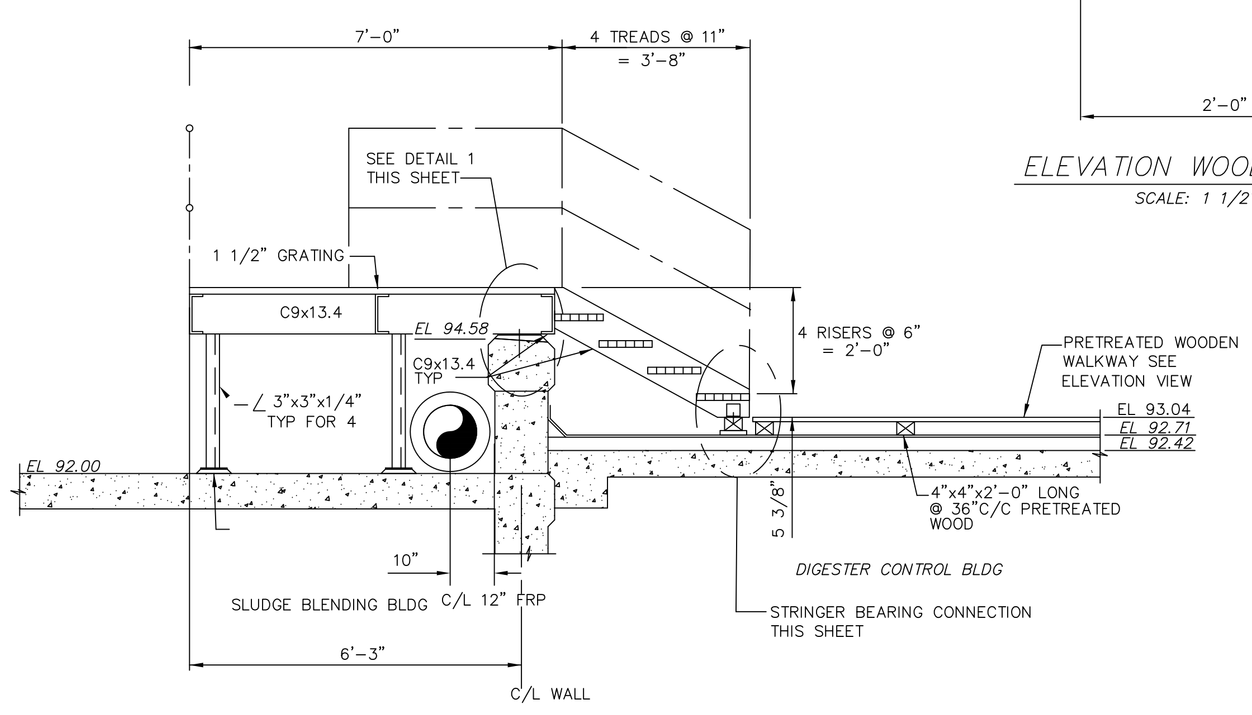

SECTION 3/P78
SCALE :1/2"=1'-0"

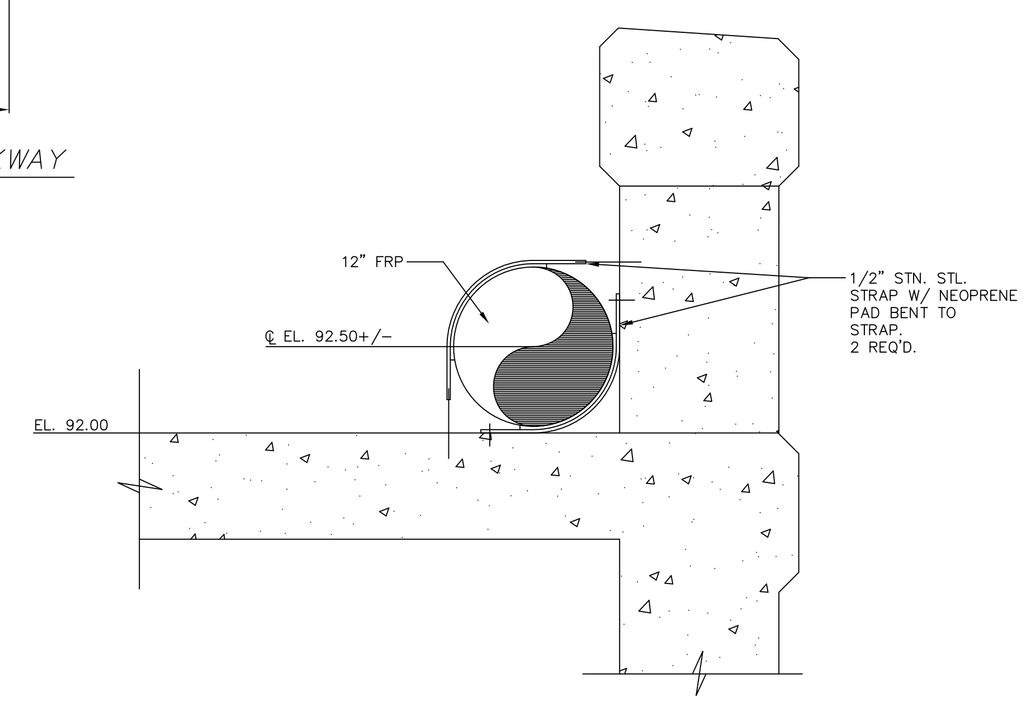

PIPE STRAPPING DETAIL
SCALE: 1-1/2"=1'-0"

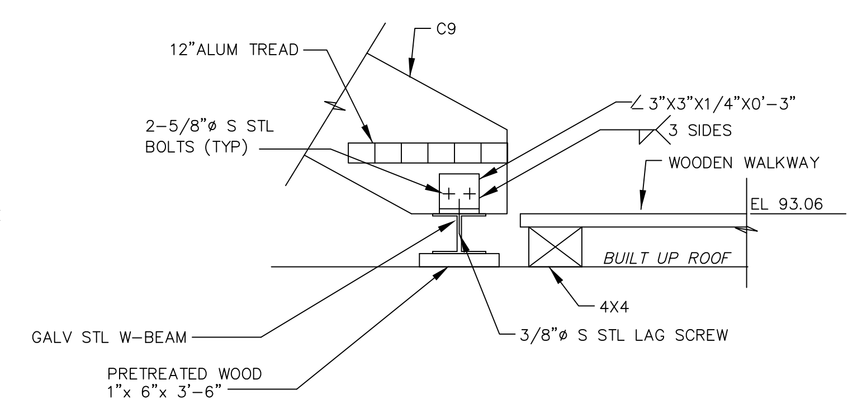

STRINGER BEARING CONNECTION AT WOODEN WALKWAY
SCALE: 1 1/2"=1'-0"

THIS DRAWING IS AN INSTRUMENT OF SERVICE OWNED BY CTI ENVIRONMENTAL, INC. WHICH SHALL BE DEEMED THE AUTHOR AND SHALL RETAIN ALL STATUTORY AND COMMON LAW RIGHTS, INCLUDING COPYRIGHTS. THIS DRAWING SHALL NOT BE SUBMITTED, COPIED, OR DISTRIBUTED TO OTHERS IN ANY FORM, OR USED FOR ANY OTHER PURPOSE OR PROJECT WITHOUT PRIOR WRITTEN CONSENT OF CTI ENVIRONMENTAL, INC. CTI ENVIRONMENTAL, INC. CANNOT GUARANTEE THAT ELECTRONIC COPIES OF THIS DRAWING ARE EXACT REPRODUCTIONS OF THE SEALED ORIGINAL. IN THE EVENT OF A CONFLICT BETWEEN AN ELECTRONIC COPY AND THE SEALED ORIGINAL, THE SEALED ORIGINAL SHALL GOVERN.

REVISIONS

NO.	DESCRIPTIONS	DATE	BY	APP'D
1	RECORD DRAWING	4/05	MGW	WAD

DESIGNED BY AJP
DRAWN BY AJP
CHECKED BY RWR
APPROVED BY WAD

CTI ENVIRONMENTAL, INC.
ENGINEERS IN WATER AND EARTH SCIENCES
UNIONTOWN, OHIO

CITY OF MASSILLON, OHIO
WWTP UPGRADE 2000
SLUDGE BLENDING TANKS SECTIONS AND DETAILS

JOB NO. E9031
DATE 08/13/01
SCALE AS NOTED
SHEET P81

E:/E9031/9031GST7.DWG