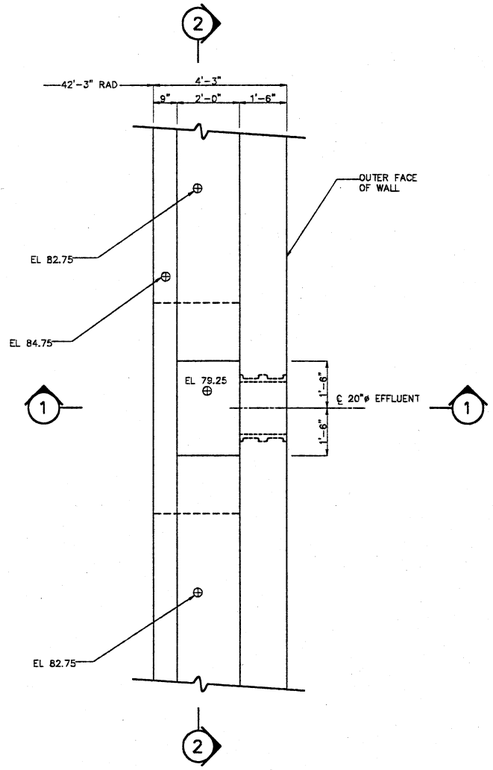

DETAIL 1 SP17
SCALE: 1/2" = 1'-0"

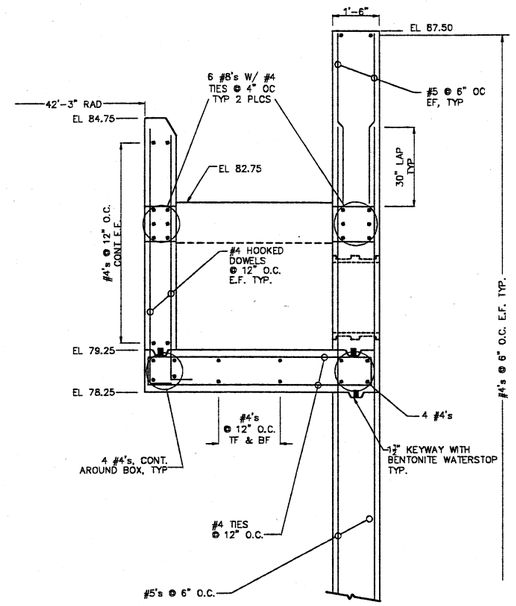

SECTION 1
SCALE: 1/2" = 1'-0"

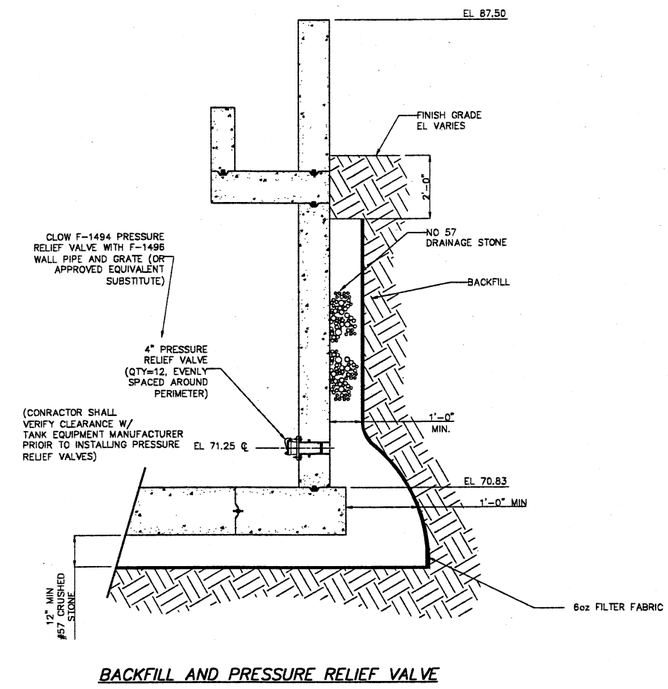

BACKFILL AND PRESSURE RELIEF VALVE

SECTION A
SCALE: NONE

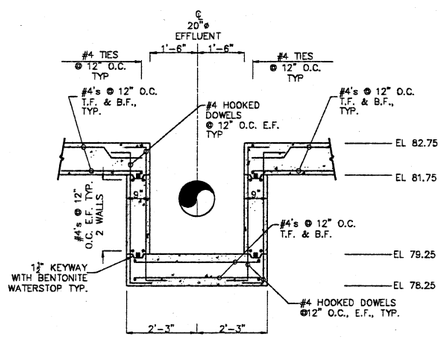

SECTION 2
SCALE: 1/2" = 1'-0"

THIS DRAWING IS AN INSTRUMENT OF SERVICE OWNED BY CONSOLIDATED TECHNOLOGIES, INC. (CTI), WHICH SHALL BE DEEMED THE AUTHOR AND OWNER OF THIS DOCUMENT THROUGHOUT THE COMMON LAW RIGHTS, INCLUDING COPYRIGHTS. THIS DRAWING SHALL NOT BE REPRODUCED, CHANGED OR COPIED IN ANY FORM OR MANNER WHATSOEVER, NOR CONVEYED TO ANY OTHER PARTY FOR ANY OTHER PURPOSE OR PROJECT WITHOUT THE WRITTEN PERMISSION OF CTI. CTI IS NOT RESPONSIBLE FOR CONSEQUENCES RELATED TO UNAUTHORIZED USE OR REUSE OF THIS DRAWING FOR OTHER PURPOSES.

REVISIONS			
NO.	DESCRIPTIONS	DATE	BY	APP'D

DESIGNED BY RLP
DRAWN BY AMF
CHECKED BY
APPROVED BY WAD

ENVIRONMENTAL INC.
ENGINEERS, WATER AND EARTH SCIENCES
UNIONTOWN, OHIO

CITY OF MASSILLON, OHIO
WWTP UPGRADE 2000
SECONDARY CLAIRIFIER NO 4 AND NO 5
SECTIONS AND DETAILS

JOB NO. E9031
DATE 08/13/01
SCALE AS NOTED
SHEET SP18A

E:/E9031/SP18A.DWG

E:\E9031\S-DRAWINGS\SP18A.dwg Tue Aug 14 08:57:44 2001