CITY OF MASSILLON

CITY ENGINEER DEPARTMENT

STARK COUNTY, OHIO

Southway Sanitary Sewer Extension

PROJECT DESCRIPTION

NEW 8" SANITARY SEWER ALONG THE SOUTH SIDE OF SOUTHWAY ST. SW.

CONVENTIONAL SIGNS

RIGHT OF WAY • • • EXISTING: , PROPOSED:
COUNTY LINE • • • •
TOWNSHIP LINE • • •
CORPORATION LINE • •
FENCE LINE • • • • EXISTING: , PROPOSED:
GUARDRAIL • • • • EXISTING: , PROPOSED:
MANHOLES • • • • • EXISTING: , PROPOSED: , REHABILITATED:
CATCH BASINS • • EXISTING: , PROPOSED: , REHABILITATED:
SIGNS • • • • • • 1-POST: , 2-POST: , 3-POST: , STREET:
EXISTING POLES • • • POWER: , TELEPHONE , LIGHT , SPAN
PROPOSED POLES • • POWER: , TELEPHONE , LIGHT , SPAN
EXIST. UTILITIES • • • VALVE: , HYDRANT: , METERS: , GUY:

PERMIT TO INSTALL

SANITARY SEWER PERMIT TO INSTALL (P.T.I.) HAS BEEN RECEIVED FROM THE OHIO ENVIROMENTAL PROTECTION AGENCY PROTECTION AGENCY THIS_____DAY OF, _____, 20___.
PTI No. _____

UNDERGROUND UTILITIES

TWO WORKING DAYS
BEFORE YOU DIG
CALL 1-800-362-2764 (TOLL FREE)
OHIO UTILITIES PROTECTION SERVICE
NON-MEMBERS
MUST BE CALLED DIRECTLY

TWO WORKING DAYS
BEFORE YOU DIG
1-800-925-0988 (TOLL FREE)
OIL & GAS PRODUCERS UNDERGROUND PROTECTION SERVICE

PLAN PREPARED BY:
CITY OF MASSILLON
Engineering Department

OWNER:
CITY OF MASSILLON
151 Lincoln Way East
Massillon, Ohio 44646

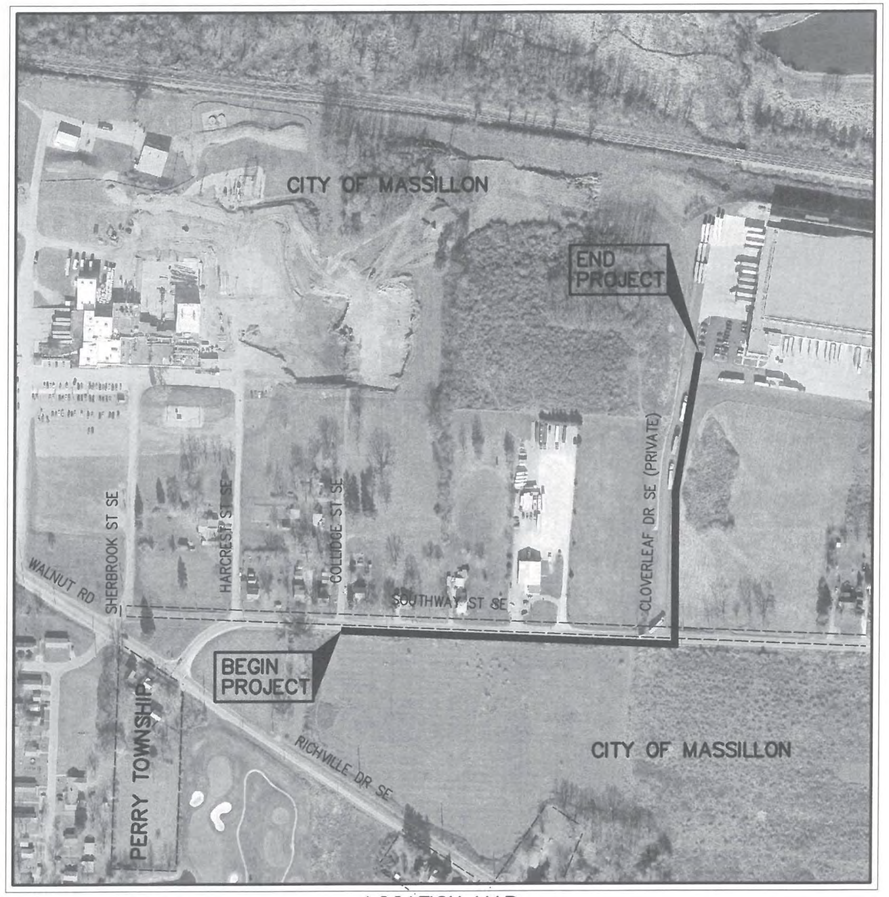

LOCATION MAP

PORTION TO BE IMPROVED • • • • • • • • • • • • •
STREETS •

Kathy Catazaro-Perry, Mayor
Massillon
City of Champions

INDEX OF SHEETS:

TITLE SHEET • • • • • • • • • • • • • • 1
GENERAL NOTES • • • • • • • • • • • • 2-3
PLAN AND PROFILE • • • • • • • • • • • 4-8
GENERAL SUMMARY AND DETAILS • • • • 9-11

CITY ENGINEER — KEITH A. DYLEWSKI, P.E., P.S. — DATE 4/16/15

STATE OF OHIO
KEITH A. DYLEWSKI
E-70907
REGISTERED PROFESSIONAL ENGINEER

CITY OF MASSILLON ELECTED OFFICIALS

KATHY CATAZARO-PERRY • • • • • • • • • • • • • • • • • • MAYOR
PERICLES G. STERGIOS • • • • • • • • LAW DIRECTOR/PROSECUTOR
JAYNE FERRERO • AUDITOR
MAUDE SLAGLE • TREASURER

COUNCIL

TONY M. TOWNSEND • • • • • • • • • • • • • • • • • PRESIDENT
SARITA CUNNINGHAM-HEDDERLY • • • • • • • • • • • • 1st WARD
NANCY HALTER • • • • • • • • • • • • • • • • • • • 2nd WARD
ANDREA SCASSA • • • • • • • • • • • • • • • • • • 3rd WARD
SHADDRICK STINSON • • • • • • • • • • • • • • • • 4th WARD
MEGAN STARRETT • • • • • • • • • • • • • • • • • 5th WARD
ED LEWIS • 6th WARD
PAUL MANSON • • • • • • • • • • • • • • • • • • AT LARGE
MICHELLE DEL RIO-KELLER • • • • • • • • • • • • • AT LARGE
MILAN CHOVAN • • • • • • • • • • • • • • • • • • AT LARGE

NW NE SW SE N

VERTICAL IN FEET 200 100 0

0 100 200
HORIZONTAL SCALE IN FEET

CHECKED BY: KAD
DATE: April, 2013
DRAWN BY: FPW
DATE: April, 2013

REVISIONS: DATE | DESCRIPTION

Southway Sanitary Sewer Extension
Title Sheet
City of Massillon
Stark County, Ohio

Kathy Catazaro-Perry, Mayor
Massillon
City of Champions

DRAWING NAME: SouthwayTitle.dwg
CITY NUMBER: 13ss01

UTILITIES

LISTED BELOW ARE ALL KNOWN UTILITIES LOCATED WITHIN THE PROJECT CONSTRUCTION LIMITS TOGETHER WITH THEIR RESPECTIVE OWNERS:

AT&T
50 W.BOWERY, 6TH FLOOR
AKRON, OH 44308
800-384-8057

AQUA WATER
P.O. BOX 584
MASSILLON, OH 44648
(330) 833-4156

OHIO EDISON
STARK DIVISION
2600 S. ERIE ST.
MASSILLON, OH 44545
(330) 830-7085

MASSILLON CABLE TV
P.O. BOX 814
MASSILLON, OH 44648
(330) 833-4134

GREAT LAKES
104 6TH ST. S.W.
CANTON, OH 44702
(330) 456-2454

CITY OF MASSILLON
SANITARY SEWER
151 LINCOLN WAY EAST
MASSILLON, OH 44646
(330) 830-1722

AT&T COMMUNICATIONS
2535 E. 40TH AVE.
DENVER, CO 80205-3601
(800) 852-3786

DOMINION EAST OHIO GAS COMPANY
4725 SOUTHWAY ST. S.W.
CANTON, OH 44706
(330) 478-3142

NORTHEAST OHIO NATURAL
GAS CORP.
9081 S.R. 250
STRASBURG, OH 44680-9766
(330) 878-5589

THE CONTRACTOR SHALL NOTIFY ALL UTILITIES 48 HOURS PRIOR TO WORK.

THE LOCATION OF THE UNDERGROUND UTILITIES SHOWN ON THE PLANS ARE SHOWN AT APPROXIMATE LOCATIONS AND WHERE OBTAINED AS REQUIRED FROM THE OWNERS AS REQUIRED BY SECTION 153.64 OF THE OHIO REVISED CODE

OPUS – 1-800-362-2764
OUTPUTS – 1-800-925-0988

DATUM ELEVATION

ALL BENCHMARKS ARE BASED ON REFERENCE BENCHMARKS PROVIDED BY THE CITY OF MASSILLON

STATIONING

ALL STATIONING SHOWN IS REFERENCED TO THE BASELINE AS SHOWN.

NOTIFICATION OF SAFETY FORCES AND BUS GARAGES

THE CONTRACTOR SHALL NOTIFY ALL AGENCY LISTED BELOW AT LEAST 48 HOURS IN ADVANCE OF ANY STREET CLOSING OR TRAFFIC CHANGE.

MASSILLON SAFETY SERVICE
330-830-1702

MASSILLON FIRE DEPARTMENT
330-833-1053

PERRY TOWNSHIP HALL
330-833-2141

NORTH LAWRANCE FIRE DEPT.
330-832-6347

TUSCARAWAS TOWNSHIP HALL
330-832-4337

JACKSON FIRE DEPARTMENT
330-832-1553

MASSILLON POLICE DEPARTMENT
330-830-1735

PERRY POLICE DEPARTMENT
330-833-3865

JACKSON TOWNSHIP HALL
330-832-7416

PERRY FIRE DEPARTMENT
330-478-5121

JACKSON POLICE DEPARTMENT
330-497-7440

JACKSON SCHOOL BUS GARAGE
330-830-8042

PERRY SCHOOL BUS GARAGE
330-477-1300

STARK COUNTY SHERIFF
330-430-3887

MASSILLON SCHOOL BUS GARAGE
330-830-1849

SARTA
330-454-5333

TUSCARAWAS SCHOOL BUS GARAGE
330-837-7805

SUBSURFACE CONDITIONS

IT IS THE OBLIGATION AND RESPONSIBILITY OF THE CONTRACTOR TO MAKE HIS OWN INVESTIGATION OF SUBSURFACE CONDITIONS PRIOR TO SUBMITTING A BID. PROSPECTIVE BIDDERS ARE TO COORDINATE WITH THE OWNER FOR ACCESS TO THE SITE FOR INSPECTIONS AND EXPLORATORY EXCAVATION IF NEEDED. THE BIDDER SHALL CONTACT THE OWNER AT LEAST 72 HOURS IN ADVANCE OF THE DESIRED INSPECTION OR EXCAVATION. THE BIDDER SHALL CONTACT O.U.P.S. AND OBTAIN LOCATIONS OF OTHER UTILITIES.

QUANTITIES

QUANTITIES ARE INDICATED FOR COMPARISON OF BIDS ONLY. IT SHALL BE THE RESPONSIBILITY OF THE CONTRACTOR TO VERIFY QUANTITIES BEFORE ORDERING MATERIALS. VARIATIONS FROM THE PLAN QUANTITIES SHALL BE APPROVED BY THE CITY OF MASSILLON ENGINEER BEFORE MATERIAL ORDERS ARE PLACED. MATERIALS REJECTED DUE TO INCOMPATIBILITY BETWEEN ORDERED QUANTITIES AND FIELD CONDITIONS SHALL BE REPLACED AT THE CONTRACTOR'S EXPENSE.

CONSTRUCTION SPECIFICATIONS & STANDARDS

ALL CONSTRUCTION IS TO BE COMPLETED ACCORDING TO THE CURRENT CITY OF MASSILLON SPECIFICATIONS AND STANDARDS, AND THE LATEST EDITION OF THE STATE OF OHIO DEPARTMENT OF TRANSPORTATION CONSTRUCTION AND MATERIAL SPECIFICATIONS. WHEN A CONFLICT ARISES BETWEEN THE CITY OF MASSILLON AND ODOT'S STANDARDS, THE MORE STRINGENT STANDARD WILL BE USED AT THE DISCRETION OF THE CITY OF MASSILLON ENGINEER. THE CONTRACTOR SHALL FOLLOW ALL OSHA AND ADA REGULATIONS AND REQUIREMENTS.

PRESERVATION OF EXISTING UTILITY SERVICES

ANY EXISTING WATER LINE, SANITARY SEWER, STORM SEWER, GAS LINE OR OTHER UTILITY IN OR OUTSIDE OF THE CONSTRUCTION LIMITS, DAMAGED DURING CONSTRUCTION OF THE PROPOSED PROJECT SHALL BE REPLACED AT THE CONTRACTORS EXPENSE.

CONTRACTOR AVAILABILITY

THE CONTRACTOR SHALL SUPPLY THE ENGINEER WITH A 24 HOUR PHONE NUMBER WHERE THE CONTRACTOR SHALL BE AVAILABLE FOR EMERGENCIES.

CONDITIONS OF WORK

ALL WORK PERFORMED UNDER THIS CONTRACT SHALL COMPLY WITH THE U.S. DEPARTMENT OF LABOR, OCCUPATIONAL SAFETY AND HEALTH ACT, STATE, COUNTY, AND CITY OF MASSILLON LAWS AND REGULATIONS. ALL WORK, AT ALL TIMES SHALL BE SUBJECT TO OBSERVATION BY THE CITY OF MASSILLON ENGINEER AND/OR HIS REPRESENTATIVE. ALL WORK SHALL COMPLY WITH THE CONDITIONS OF THE CONTRACT DOCUMENTS AND OHIO EPA, AND STANDARDS OF THE CITY OF MASSILLON. ALL ELECTRICAL WORK SHALL COMPLY WITH THE NATIONAL ELECTRICAL CODE, AND APPLICABLE CITY, COUNTY, STATE AND FEDERAL CODES.

IT SHALL BE THE RESPONSIBILITY OF THE CONTRACTOR TO MAINTAIN SAFE AND SATISFACTORY ACCESS TO ALL ABUTTING PROPERTIES TO THE PROJECT SITE. ADJACENT ROADS SHALL BE MAINTAINED AND KEPT CLEAN OF MUD AND OTHER DEBRIS THAT MAY BE CAUSED BY TRAFFIC EXITING THE WORK SITE. THE CONTRACTOR SHALL COORDINATE AND PROVIDE FOR ALL NECESSARY TRAFFIC CONTROL. TRAFFIC CONTROL SHALL FOLLOW THE MORE STRINGENT GUIDELINES OF THE CITY OF MASSILLON OR ODOT AT THE DESECRATION OF THE CITY OF MASSILLON ENGINEER.

IT SHALL BE THE RESPONSIBILITY OF THE CONTRACTOR TO PROVIDE AND MAINTAIN FACILITIES FOR A CONSTRUCTION OFFICE, EMPLOYEE PARKING, AND EMPLOYEE SANITARY FACILITIES. ON STREET PARKING WILL NOT BE PERMITTED. THE CONTRACTOR SHALL PROVIDE FOR THE LAWFUL OFF-SITE DISPOSAL OF DEMOLITION DEBRIS AND CONSTRUCTION WASTE.

ITEM 659. TOPSOIL, SEEDING AND MULCHING

ITEM 659 SHALL BE APPLIED TO ALL EXPOSED SOIL AREAS DISTURBED DURING CONSTRUCTION. SUCH AS SPECIFIED IN ITEM 659 AND IS NOT LIMITED TO JUST TOPSOIL, SEEDING AND MULCHING.

THE CITY SHALL APPROVE SEED MIX PRIOR TO APPLICATION TO BE USED THROUGHOUT CONSTRUCTION LIMITS.

EXISTING DATA

EACH CONTRACTOR SHALL VISIT THE SITE PERSONALLY TO ASCERTAIN THE NATURE OF THE WORK AND BECOME THOROUGHLY FAMILIARIZED WITH THE SITE PRIOR TO BID SUBMISSION.

EXISTING STRUCTURES, GRADES, PIPING, ETC. ARE INDICATED IN APPROXIMATE LOCATION ON THE PLAN. INFORMATION SHOWN IS NOT GUARANTEED TO BE CORRECT AND COMPLETE. THE DATA SHALL BE VERIFIED IN THE FIELD BY THE CONTRACTOR. THE EXISTENCE OF FACILITIES ABOVE OR BELOW GROUND, WHICH MAY NOT BE SHOWN, WILL NOT BE A BASIS FOR A CLAIM FOR EXTRA WORK.

EXISTING UNDERGROUND UTILITIES SHOWN ARE RECORDS PROVIDED BY UTILITY COMPANIES AND ARE APPROXIMATE ONLY. SERVICE LATERALS ARE NOT SHOWN.

IT IS THE RESPONSIBILITY OF CONTRACTOR TO NOTIFY THE CITY, PRIOR TO BID OPENING NON-CONFORMING OR CONFLICTING INFORMATION.

EXCAVATED MATERIAL

ALL EXCAVATED MATERIAL AND ALL MATERIAL USED IN CONSTRUCTION OF THE WORK SHALL BE PILED AND STORED IN A MANNER THAT WILL NOT ENDANGER THE WORK AND THAT WILL LEAVE DRIVEWAYS OR OTHER CONTROLS UNOBSTRUCTED AND ACCESSIBLE WHILE THE WORK IS TO BE COMPLETED. SATISFACTORY PROVISIONS SHALL BE MADE FOR STREET DRAINAGE, AND NATURAL WATERCOURSES SHALL NOT BE OBSUCTED. DURING THE PROGRESS OF THE WORK, ALL MATERIAL PILES SHALL BE KEPT TRIMMED UP AND MAINTAINED IN A NEAT MANNER. ALL EXCAVATED WASTE MATERIAL SHALL BE REMOVED FROM THE PROJECT SITE, AS DIRECTED BY THE ENGINEER. THE WASTE SITE IS TO BE PROVIDED BY THE CONTRACTOR AT NO COST TO THE CITY, UNLESS OTHERWISE NOTED IN THE SPECIFICATIONS ALONG WITH A LETTER FROM THE PROPOSED WASTE SITE OWNER PERMITTING SUCH AND HOLDING THE CITY HARMLESS.

RESTORATION

FOR SANITARY SEWER INSTALLED, TESTED, AND ACCEPTED UP TO MAY 15TH OF ANY CALENDAR YEAR, RESTORATION SHALL BE COMPLETE BY JUNE 30th OF THAT YEAR. FOR INSTALLATION OF SANITARY SEWER TESTED AND ACCEPTED FROM MAY 15th TO SEPTEMBER 30th OF ANY CALENDAR YEAR, RESTORATION SHALL BE COMPLETE BY NOVEMBER 15th OF THAT CALENDAR YEAR. FOR SANITARY SEWER INSTALLED, TESTED, AND ACCEPTED AFTER NOVEMBER 15TH OF ANY CALENDAR YEAR, RESTORATION SHALL BE COMPLETE BY MAY 15th OF THE NEXT CALENDAR YEAR.

PAVEMENT CROSSINGS WILL RECEIVE TYPE C PAVEMENT REPLACEMENT WITH FULL WIDTH PAVEMENT OVERLAY.

CONTRACTOR TO REPLACE ALL PAVEMENT MARKINGS, WITH THE COST TO BE INCLUDED IN THE UNIT PRICE BID FOR PAVEMENT.

CONTRACTOR TO USE HOT APPLIED JOINT CRACK SEALER ON ASPHALT PAVEMENT AT ALL ENDS AND INTERSECTIONS.

ALL TRENCHES IN ROAD RIGHT OF WAY WILL RECEIVE FULL DEPTH PREMIUM GRANULAR BACKFILL.

PAYMENT FOR THE OPERATIONS DESCRIBED ABOVE SHALL BE INCLUDED IN THE CONTRACT PRICE FOR THE PERTINENT 603 CONDUIT ITEM.

REMOVAL AND RELOCATION OF EXISTING UTILITIES

THE CONTRACTOR IS REQUIRED TO COOPERATE WITH EACH RESPECTIVE UTILITY OWNER FOR THE REMOVAL AND/OR RELOCATION OF ANY AND ALL UTILITIES THAT CREATE A CONFLICT WITH CONSTRUCTION OF THE PROJECT.

ITEM 623. CONSTRUCTION STAKING

CONTRACTOR IS RESPONSIBLE FOR ALL CONSTRUCTION LAYOUT. THIS WORK IS TO BE UNDER ITEM 623 CONSTRUCTION STAKING.

CROSSING OR CONNECTING TO EXISTING PIPES AND UTILITIES

WHERE THE PLANS PROVIDE FOR A PROPOSED CONDUIT TO BE CONNECTED TO, OR CROSS OVER OR UNDER AN EXISTING SEWER OR UNDERGROUND UTILITY, THE CONTRACTOR SHALL LOCATE THE EXISTING PIPES OR UTILITIES BOTH AS TO LINE AND GRADE BEFORE STARTING TO LAY THE PROPOSED CONDUIT.

IF IT IS DETERMINED THAT THE ELEVATION OF THE EXISTING CONDUIT, OR EXISTING APPURTENANCE TO BE CONNECTED, DIFFERS FROM THE PLAN ELEVATION OR RESULTS IN A CHANGE IN THE PLAN CONDUIT SLOPE, THE CITY OF MASSILLON ENGINEER SHALL BE NOTIFIED BEFORE STARTING CONSTRUCTION OF ANY PORTION OF THE PROPOSED CONDUIT WHICH WILL BE AFFECTED BY THE VARIANCE IN THE EXISTING ELEVATIONS.

PAYMENT FOR THE OPERATIONS DESCRIBED ABOVE SHALL BE INCLUDED IN THE CONTRACT PRICE FOR THE PERTINENT 603 CONDUIT ITEM.

REVIEW OF SANITARY AND DRAINAGE FACILITIES

BEFORE ANY WORK IS STARTED ON THE PROJECT AND AGAIN BEFORE FINAL ACCEPTANCE BY THE CITY OF MASSILLON AND THE CONTRACTOR, ALONG WITH LOCAL REPRESENTATIVES, SHALL MAKE AN INSPECTION OF ALL EXISTING SEWERS WHICH ARE TO REMAIN IN SERVICE AND WHICH MAY BE AFFECTED BY THE WORK. THE CONDITION OF THE EXISTING CONDUITS AND THEIR APPURTENANCES SHALL BE DETERMINED FROM FIELD OBSERVATIONS. RECORDS OF THE INSPECTION SHALL BE KEPT IN WRITING BY THE CITY OF MASSILLON.

ALL NEW CONDUITS, INLETS, CATCH BASINS, AND MANHOLES CONSTRUCTED AS A PART OF THE PROJECT SHALL BE FREE OF ALL FOREIGN MATTER AND IN A CLEAN CONDITION BEFORE THE PROJECT WILL BE ACCEPTED BY THE CITY OF MASSILLON.

ALL EXISTING SEWERS INSPECTED INITIALLY BY THE ABOVE MENTIONED PARTIES SHALL BE MAINTAINED AND LEFT IN A CONDITION REASONABLY COMPARABLE TO THAT DETERMINED BY THE ORIGINAL INSPECTION. ANY CHANGE IN THE CONDITION RESULTING FROM THE CONTRACTOR'S OPERATIONS SHALL BE CORRECTED BY THE CONTRACTOR TO THE SATISFACTION OF THE CITY OF MASSILLON ENGINEER.

PAYMENT FOR ALL OPERATIONS DESCRIBED ABOVE SHALL BE INCLUDED IN THE CONTRACT PRICE FOR THE PERTINENT 603 CONDUIT ITEMS.

SANITARY SEWER SPECIFICATIONS

SANITARY SEWER CONSTRUCTION PROPOSED FOR THIS PROJECT SHALL CONFORM TO THE LATEST CITY OF MASSILLON STANDARDS AND CONSTRUCTION AND MATERIALS SPECIFICATIONS, TEN STATE STANDARDS, AND THE LATEST EDITION OF THE ODOT CMS, OR MODIFIED BY THE CONTRACT DRAWINGS. IF A CONFLICT ARISES BETWEEN SAID STANDARDS IT SHALL BE AT THE DISCRETION OF THE CITY OF MASSILLON ENGINEER AS TO WHICH STANDARD SHALL GOVERN. THE PROJECT CONTRACT DRAWINGS SHALL GOVERN UNLESS NOTED OTHERWISE.

SANITARY GRAVITY SEWER PIPE AND FITTINGS SHALL BE PVC SDR 35 CONFORMING TO ASTM D-3034 UNLESS OTHERWISE NOTED. PVC COMPOUNDS SHALL CONFORM TO ASTM D-1784 PVC PIPE AND FITTINGS SHALL HAVE BELL AND SPIGOT TYPE JOINTS CONFORMING TO ASTM D-3212 AND GASKETS CONFORMING TO ASTM F-477

BACKFILL IN SEWER TRENCHES SHALL CONFORM TO ODOT ITEM 603.10 AND BE PLACED IN LAYERS SUFFICIENT TO MEET THE COMPACTION REQUIREMENT OF 100% OF MAXIMUM LABORATORY DRY DENSITY PER ASTM D-698 AND THOROUGHLY COMPACTED WITH MACHINE MOUNDED COMPACTION EQUIPMENT. THE PLACING OF BACKFILL MATERIAL SHALL BE CONTINUED UNTIL THE TRENCH IS ENTIRELY FILLED AND COMPACTED WITH THE APPROVED GRANULAR MATERIAL TO THE GRADE CALLED FOR ON THE CONTRACT DRAWINGS. EXCAVATED MATERIAL CONFORMING TO ODOT ITEM 203 MAY BE USED FOR BACKFILLING EXISTING STRUCTURES (AFTER REMOVAL) ONLY ST THE DISCRETION OF THE MASSILLON CITY ENGINEER. CRUSHED GRAVEL CONFORMING TO GRADATION REQUIREMENTS OF ODOT ITEM 304 OR APPROVED EQUAL AS SHOWN IN ODOT TABLE 703-1 SHALL BE USED FOR BACKFILLING ALL SEWER TRENCH AREAS SHOWN ON THE PLANS AND AS DIRECTED BY THE CITY OF MASSILLON ENGINEER. FLOODING, JETTING, OR PUDDLING OF BACKFILL MATERIAL WILL NOT BE PERMITTED UNLESS APPROVED BY THE CITY OF MASSILLON ENGINEER. COMPACTION TESTING OF THE BACKFILL BY A GEOTECHNICAL ENGINEER MAY BE REQUIRED BY THE OWNER AT THE EXPENSE OF THE CONTRACTOR.

SANITARY SEWERS SHALL BE AIR TESTED FOR LEAKAGE AND MANDREL TESTED FOR DEFLECTION. THE MAXIMUM ALLOWABLE PIPE DEFLECTION SHALL BE 5%.

PRIOR TO FINAL PAYMENT FOR AND ACCEPTANCE OF SANITARY SEWER INSTALLATION THE RESULTS OF THE AIR PRESSURE TESTS, TELEVISION TESTS AND MADREL TESTS SHALL BE FORWARDED TO THE CITY OF MASSILLON ENGINEER.

NW NE SW SE

VERTICAL FEET 1 .5 0

0 .5 1
HORIZONTAL SCALE IN FEET

CHECKED BY: KAD
DATE: Dec, 2014
DRAWN BY: FW
DATE: Dec, 2014

REVISIONS:

DATE	DESCRIPTION

Southway Sanitary Sewer Extension
General Notes
City of Massillon
Stark County, Ohio

Kathy Catazaro-Perry, Mayor
Massillon
City of Champions

DRAWING NAME: SouthwaySN1.dwg
CITY NUMBER: 13ss01

ITEM 407. TACK COAT

THE RATE OF APPLICATION OF THE 407 TACK COAT SHALL BE SUBJECT TO ADJUSTMENT AS DIRECTED BY THE ENGINEER. QUANTITIES INDICATE AN AVERAGE APPLICATION RATE OF 0.08 GALLONS PER SQUARE YARD OF TACK COAT FOR ESTIMATING PURPOSES ONLY.

EROSION CONTROL

THE CONTRACTOR SHALL PREPARE AND SUBMIT A STORM WATER POLLUTION CONTROL PLAN TO THE CITY OF MASSILLON ENGINEER TO BE FORWARDED TO THE APPROPRIATE PERMITTING AGENCIES. SAID PLAN MUST COMPLY WITH THE MOST CURRENT RULES AND REGULATIONS OF THE CITY OF MASSILLON.

DEFLECTION TESTING

MAXIMUM ALLOWABLE PIPE DEFLECTION (REDUCTION IN VERTICAL INSIDE DIAMETER) SHALL BE 5%. DEFLECTION TESTS OF PIPE SHALL BE PERFORMED NOT SOONER THAN 30 DAYS AFTER THE BACKFILL HAS BEEN PROPERLY PLACED AND BEFORE FINAL ACCEPTANCE. LOCATIONS WITH EXCESS DEFLECTION SHALL BE EXCAVATED AND REPAIRED BY RE-BEDDING OR REPLACEMENT OF THE PIPE AT THE CONTRACTOR'S EXPENSE. DEVICES FOR TESTING INCLUDE A DEFLECTOMETER METER, OR PROPERLY SIZED (60, NO-GO) MANDREL OR SEWER BALL. THE DEFLECTION TESTING MUST BE CONDUCTED WITHOUT MECHANICAL PULLING DEVICES. FOR THE PURPOSE OF DEFLECTION MEASUREMENTS, THE BASE INSIDE PIPE DIAMETERS WITHOUT DEFLECTION ARE PROVIDED IN TABLE A. THE MAXIMUM ALLOWABLE DEFLECTION SHALL BE APPLIED TO THE BASE INSIDE DIAMETER IN DETERMINING THE MINIMUM PERMISSIBLE DIAMETER. IT MUST BE EMPHASIZED THAT TO INSURE ACCURATE TESTING, THE LINES MUST BE THOROUGHLY CLEANED.

TABLE A
INSIDE DIAMETERS FOR DEFLECTION MEASUREMENTS
OF ASTM D 3034 SDR 35 / SDR 21 PVC SEWER PIPE

SIZE	SDR	AVG. O.D.	BASE I.D.	DEFLECTION MANDREL
6"	35	6.275	5.742	5.54
8"	35	8.400	7.665	7.28
10"	35	10.500	9.563	9.08
12"	35	12.500	11.361	10.79

TELEVISION TESTING

ALL SANITARY SEWERS, 8-INCH DIAMETER AND LARGER, MUST PASS AN INTERNAL TELEVISION INSPECTION. THE CONTRACTOR SHALL PROVIDE A COMPLETE INTERNAL INSPECTION DVD TO THE CITY OF MASSILLON ENGINEERING DEPARTMENT. THE RECORDING PROCEDURE SHALL BE IN ACCORDANCE WITH CITY OF MASSILLON ENGINEERING DEPARTMENT STANDARDS.

LEAKAGE TESTS

LEAKAGE TESTS SHALL BE PERFORMED WHICH MAY INCLUDE APPROPRIATE WATER OR LOW PRESSURE AIR TESTING. THE TESTING METHODS SELECTED SHOULD TAKE INTO CONSIDERATION THE RANGE IN GROUNDWATER ELEVATIONS DURING THE TEST AND ANTICIPATED DURING THE DESIGN LIFE OF THE SEWER COMPLETED AND ACCEPTED.

WATER (HYDROSTATIC) TEST

THE LEAKAGE EXFILTRATION OR INFILTRATION SHALL NOT EXCEED 100 GALLONS PER INCH OF PIPE DIAMETER PER MILE PER DAY [9L/(MM OF PIPE DIAMETER KM D)] FOR ANY SECTION OF THE SYSTEM. AN EXFILTRATION OR INFILTRATION TEST SHALL BE PERFORMED WITH A MINIMUM POSITIVE HEAD OF 2 FEET (0.6 M).

AIR TESTING AS PER ASTM F1417

AIR TESTING WILL BE CONDUCTED AS THE PROJECT IS BEING CONSTRUCTED. AT NO TIME WILL MORE THAN 900 FEET OF PIPE BE INSTALLED BEFORE AIR TESTING IS PERFORMED. SEWAGE WILL NOT BE DIVERTED TO ANY SECTION OF PIPE, REGARDLESS OF LENGTH, UNTIL ALL TESTING IS COMPLETED AND ACCEPTED.

AFTER BACKFILLING A MANHOLE TO MANHOLE REACH OF SANITARY SEWER LINE, THE CONTRACTOR SHALL, AT HIS EXPENSE, CONDUCT THE LINE ACCEPTANCE TESTS. THE TESTS SHALL BE PERFORMED ACCORDING TO THE STATED PROCEDURES AND UNDER THE SUPERVISION OF THE CITY OF MASSILLON ENGINEER OR HIS REPRESENTATIVE.

EQUIPMENT USED SHALL MEET THE FOLLOWING MINIMUM REQUIREMENTS AND BE APPROVED BY THE CITY OF MASSILLON ENGINEER:

1. PNEUMATIC PLUGS SHALL HAVE A SEALING LENGTH EQUAL TO OR A GREATER THAN THE DIAMETER OF THE PIPE BEING INSPECTED.
2. PNEUMATIC PLUGS SHALL RESIST INTERNAL TEST PRESSURES WITHOUT REQUIRED EXTERNAL BRACING OR BLOCKING.
3. ALL AIR USED SHALL PASS THROUGH A SINGLE CONTROL PANEL.
4. THREE INDIVIDUAL HOSES SHALL BE USED FOR THE FOLLOWING CONNECTIONS:

   a. FROM CONTROL PANEL TO PNEUMATIC PLUGS FOR INFLATION.
   b. FROM CONTROL PANEL TO SEALED LINE FOR INTRODUCING THE LOW PRESSURE AIR.
   c. FROM SEALED LINE TO CONTROL PANEL FOR CONTINUALLY MONITORING AIR PRESSURE RISE IN THE SEALED LINE.

ALL PNEUMATIC PLUGS SHALL BE SEAL TESTED BEFORE BEING USED IN THE ACTUAL TEST INSTALLATION. ONE LENGTH OF PIPE SHALL BE LAID ON THE GROUND AN SEALED AT BOTH ENDS WITH THE PNEUMATIC PLUGS TO BE CHECKED. THE SEALED PIPE SHALL BE PRESSURED TO 5 PSIG. THE PLUGS MUST HOLD AGAINST THIS PRESSURE WITHOUT HAVING TO BE BRACED.

AFTER A MANHOLE TO MANHOLE REACH OF PIPE HAS BEEN BACKFILLED AND CLEANED, AND THE PNEUMATIC PLUGS ARE CHECKED BY THE ABOVE PROCEDURE, THE PLUGS SHALL BE PLACED IN THE LINE AT EACH MANHOLE. LOW PRESSURE AIR SHALL BE SLOWLY INTRODUCED INTO THIS SEALED LINE UNTIL THE INTERNAL AIR PRESSURE REACHES APPROXIMATELY 4 PSIG.

AT LEAST TWO MINUTES SHALL BE ALLOWED FOR THE AIR PRESSURE TO STABILIZE. WHEN THE PRESSURE HAS STABILIZED AND IS AT OR ABOVE 3.5 PSIG, THE AIR HOSE FROM THE CONTROL PANEL TO THE AIR SUPPLY SHALL BE DISCONNECTED. THE PORTION OF THE LINE BEING TESTED SHALL BE TERMED "ACCEPTABLE" IF THE TIME REQUIRED IN MINUTES FOR THE PRESSURE TO DECREASE FROM 3.5 TO 2.5 PSIG (GREATER THEN THE AVERAGE BACK PRESSURE OF ANY GROUNDWATER THAT MAY BE OVER THE PIPE) SHALL NOT BE LESS THAN THE TIME SHOWN FOR THE GIVEN DIAMETERS IN THE FOLLOWING TABLE:

PIPE DIAMETER IN.	MINIMUM TIME MINUTES	LENGTH FOR MINUTES TIME, FT.	TIME FOR LONGER LENGTH, S	SPECIFICATION TIME LENGTH (L) SHOWN, MINUTES							
				100 FT.	150 FT.	200 FT.	250 FT.	300 FT.	350 FT.	400 FT.	450 FT.
4	3:46	597	0.380 L	3:46	3:46	3:46	3:46	3:46	3:46	3:46	3:46
6	5:40	398	0.854 L	5:40	5:40	5:40	5:40	5:40	5:40	5:42	6:24
8	7:34	298	1.520 L	7:34	7:34	7:34	7:36	7:36	8:52	10:08	11:24
10	9:26	239	2.374 L	9:26	9:26	9:26	9:53	11:52	13:51	15:49	17:48
12	11:20	198	3.416 L	11:20	11:20	11:24	14:15	17:05	19:56	22:47	25:38
15	14:10	159	6.342 L	14:10	14:10	17:46	22:15	26:42	31:09	35:36	40:04
18	17:0	133	7.692 L	17:00	19:13	25:38	32:09	38:27	44:52	51:16	57:41
21	19:50	114	10.470 L	19:50	26:10	36:54	43:37	52:21	81:00	69:48	78:31
24	22:40	99	13.674 L	22:47	34:11	45:34	56:58	68:22	79:46	91:10	102:33
27	25:30	88	17.306 L	28:51	43:16	57:41	72:07	86:32	100:57	115:22	129:48
30	28:20	80	21.366 L	35:37	53:25	71:13	89:02	106:50	124:38	142:26	160:15
33	31:10	72	25.852 L	49:05	64:38	86:10	107:43	129:16	150:43	172:21	193:53
36	34:00	66	30.768 L	51:17	76:55	102:34	128:12	153:50	170:29	205:07	230:46

IN AREAS WHERE GROUND WATER IS KNOWN TO EXIST, THE CONTRACTOR SHALL INSTALL A 1/2 INCH DIAMETER CAPPED PIPE NIPPLE APPROXIMATELY 10 INCHES LONG, THROUGH THE MANHOLE WALL ON TOP OF ONE OF THE SANITARY SEWER LINES ENTERING THE MANHOLE. THIS SHALL BE DONE AT THE TIME THE SANITARY SEWER LINE IS INSTALLED. IMMEDIATELY PRIOR TO THE PERFORMANCE OF THE LINE ACCEPTABILITY TEST, THE GROUND WATER SHALL BE DETERMINED BY REMOVING THE PIPE CAP, BLOWING AIR THROUGH THE PIPE NIPPLE IN THE GROUND SO AS TO CLEAR IT, AND THEN CONNECTING A CLEAR PLASTIC TUBE TO THE NIPPLE. THE PLASTIC TUBE SHALL BE VERTICAL AND A MEASUREMENT OF THE HEIGHT, IN FEET OF WATER OVER THE INVERT OF THE PIPE, SHALL BE TAKEN AFTER THE WATER HAS STOPPED RISING IN THIS PLASTIC TUBE. THE HEIGHT, IN FEET OF WATER OVER THE INVERT OF THE PIPE, SHALL BE TAKEN AFTER THE WATER HAS STOPPED RISING IN THIS PLASTIC TUBE. AIR TEST PRESSURE IS TO BE INCREASED BY 0.433 PSI FOR EACH FOOT THE GROUND WATER IS ABOVE THE INVERT OF THE SEWER LINE BEING TESTED. THE ALLOWABLE DROP OF ONE POUND AND THE TIMING OF THE TEST REMAIN THE SAME.

IF A LINE ACCEPTABILITY TEST IS BEING CONDUCTED ON MORE THAN ONE MANHOLE REACH OF PIPE, THE ENTIRE SECTION BEING TESTED SHALL MEET THE LINE ACCEPTABILITY REQUIREMENTS AS IF ONLY ONE (1) OF THE MANHOLE REACHES IN THE SECTION WERE BEING TESTED.

NEGATIVE AIR PRESSURE (VACUUM) TESTING OF MANHOLES AS PER ASTM C-1244

PREPARATION OF THE MANHOLE:

A. ALL LIFT HOLES SHALL BE PLUGGED.

B. ALL PIPES ENTERING THE MANHOLE SHALL BE TEMPORARILY PLUGGED, TAKING CARE TO SECURELY BRACE THE PIPES AND PLUGS TO PREVENT THEM FROM BEING DRAWN INTO THE MANHOLE.

PROCEDURE:

A. THE TEST HEAD SHALL BE PLACED AT THE TOP OF THE MANHOLE IN ACCORDANCE WITH THE MANUFACTURER'S RECOMMENDATIONS.

B. A VACUUM OF 10 IN. OF MERCURY SHALL BE DRAWN ON THE MANHOLE, THE VALVE ON THE VACUUM LINE OF THE TEST HEAD CLOSED, AND THE VACUUM PUMP SHUT OFF. THE TIME SHALL BE MEASURED FOR THE VACUUM TO DROP TO 9 IN OF MERCURY.

C. THE MANHOLE SHALL PASS IF THE TIME FOR THE VACUUM READING TO DROP FROM 10 IN. OF MERCURY TO 9 IN. OF MERCURY MEETS OR EXCEEDS THE VALUES INDICATED IN TABLE BELOW.

MINIMUM TEST TIMES FOR MANHOLES

DEPTH (FT)	DIAMETER, IN.								
	30	33	36	42	48	54	60	66	72
	TIME, IN SECONDS								
8	11	12	14	17	20	23	26	29	33
10	14	15	18	21	25	29	33	36	41
12	17	18	21	25	30	35	39	43	49
14	20	21	25	30	35	41	46	51	57
16	22	24	39	34	40	46	52	58	67
18	25	27	32	38	45	52	59	65	73
20	28	30	35	42	50	53	65	72	81
22	31	33	39	46	55	64	72	79	89
24	33	36	42	51	59	64	78	87	97
26	36	39	46	55	64	75	85	94	105
28	39	42	49	59	69	81	91	101	113
30	42	45	53	63	74	87	98	108	121

CLEAN WATER STATEMENT

ROOF DRAINS, FOUNDATION DRAINS, AND OTHER CLEAN WATER CONNECTIONS TO THE SANITARY SEWER ARE PROHIBITED.

RELATION TO WATER MAINS

SEWERS SHALL BE LAID AT LEAST 10 FEET HORIZONTALLY FROM ANY EXISTING OR PROPOSED WATER MAIN. THE DISTANCE SHALL BE MEASURED EDGE TO EDGE.

SEWERS CROSSING WATER MAINS SHALL BE LAID TO PROVIDE A MINIMUM VERTICAL DISTANCE OF 18 INCHES BETWEEN THE OUTSIDE OF THE WATER MAIN AND THE OUTSIDE OF THE SEWER.

WORKING AREA

NO EXCAVATION WITH SIDE SLOPES STEEPER THAN 2:1 AND/OR DEEPER THAN 2', OPEN CASTINGS AND PIPES SHALL BE LEFT EXPOSED WHEN THE SITE IS UNATTENDED BY THE CONTRACTOR. THE CONTRACTOR SHALL SECURE ALL SUCH EXCAVATIONS, OPEN CASTINGS AND PIPES AGAINST UNAUTHORIZED ENTRY COVERING WITH STEEL PLATES, TEMPORARY BACKFILLING, FENCING AND SECURITY SERVICES SHALL BE INCLUDED IN THE PRICE BID FOR THE WORK.

FINAL APPROVAL

A VIDEO IN THE FORM OF DVD WILL BE MADE BY THE CONTRACTOR AND SUBMITTED TO THE CITY OF MASSILLON ENGINEER PRIOR TO THE PROJECT COMMENCING. AFTER THE FINAL INVOICE IS SUBMITTED THE SITE SHALL BE VIDEOED AGAIN BY THE CONTRACTOR. ANY DISCREPANCIES WILL BE RESOLVED PRIOR TO FINAL PAYMENT. AS BUILT DRAWINGS SHALL BE CREATED BY THE CONTRACTOR AND SUBMITTED TO THE CITY OF MASSILLON ENGINEER IN A CLEAR AND LEGENDABLE MANNER PRIOR TO FINAL INVOICE.

COST OF THIS WORK SHALL BE INCLUDED IN ITEM 623 CONSTRUCTION STAKING

NW NE SW SE

VERTICAL IN FEET 1 .5 0

0 .5 1
HORIZONTAL SCALE IN FEET

CHECKED BY: KAD
DATE: Dec, 2014
DRAWN BY: FPW
DATE: Dec, 2014

REVISIONS: DATE | DESCRIPTION

Southway Sanitary Sewer Extension
General Notes
City of Massillon
Stark County, Ohio

Kathy Catazzaro-Perry, Mayor
Massillon City of Champions

DRAWING NAME: SouthwaySN2.dwg
CITY NUMBER: 13ss01

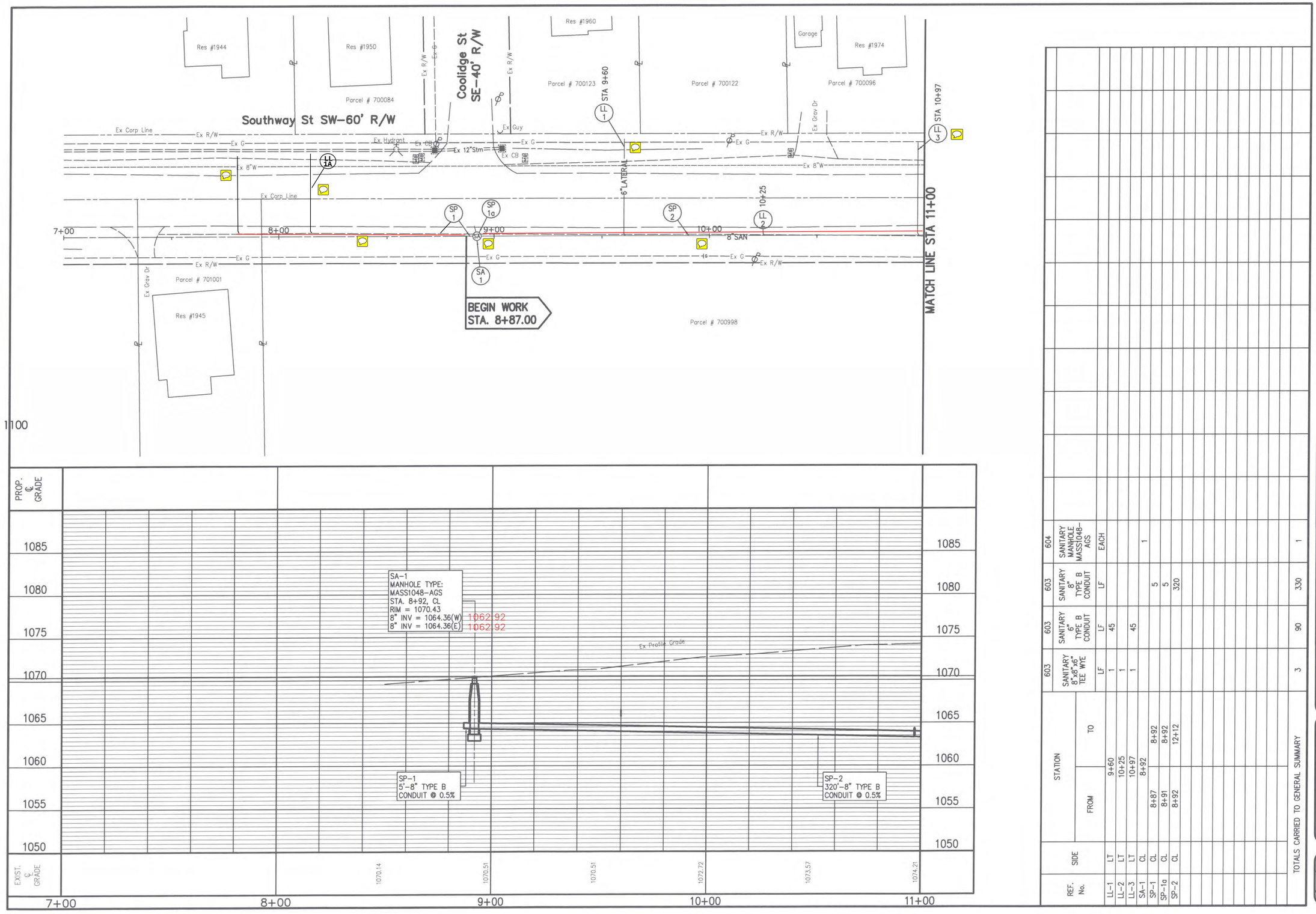

REF. No.	SIDE	STATION FROM	STATION TO	603 SANITARY 8"x8"x6" TEE WYE LF	603 SANITARY 6" TYPE B CONDUIT LF	603 SANITARY 8" TYPE B CONDUIT LF	604 SANITARY MANHOLE MASS1048-AGS EACH
LL-1	LT		9+60	1	45		
LL-2	LT		10+25	1			
LL-3	LT		10+97	1	45		
SA-1	CL		8+92				1
SP-1	CL	8+87	8+92			5	
SP-1a	CL	8+91	8+92			5	
SP-2	CL	8+92	12+12			320	
TOTALS CARRIED TO GENERAL SUMMARY				3	90	330	1

NW NE SW SE N

VERTICAL IN FEET 5 2.5 0

0 10 20
HORIZONTAL SCALE IN FEET

CHECKED BY: KAD
DATE: Dec., 2014
DRAWN BY: FPW
DATE: Dec., 2014

REVISIONS:
DESCRIPTION
DATE

Southway Sanitary Sewer Extension

Southway Plan and Profile Sta. 7+00 to Sta. 11+00

City of Massillon
Stark County, Ohio

Kathy Catazaro-Perry, Mayor
Massillon
City of Champions

DRAWING NAME: SouthwayPP2.dwg
CITY NUMBER: 13ss01

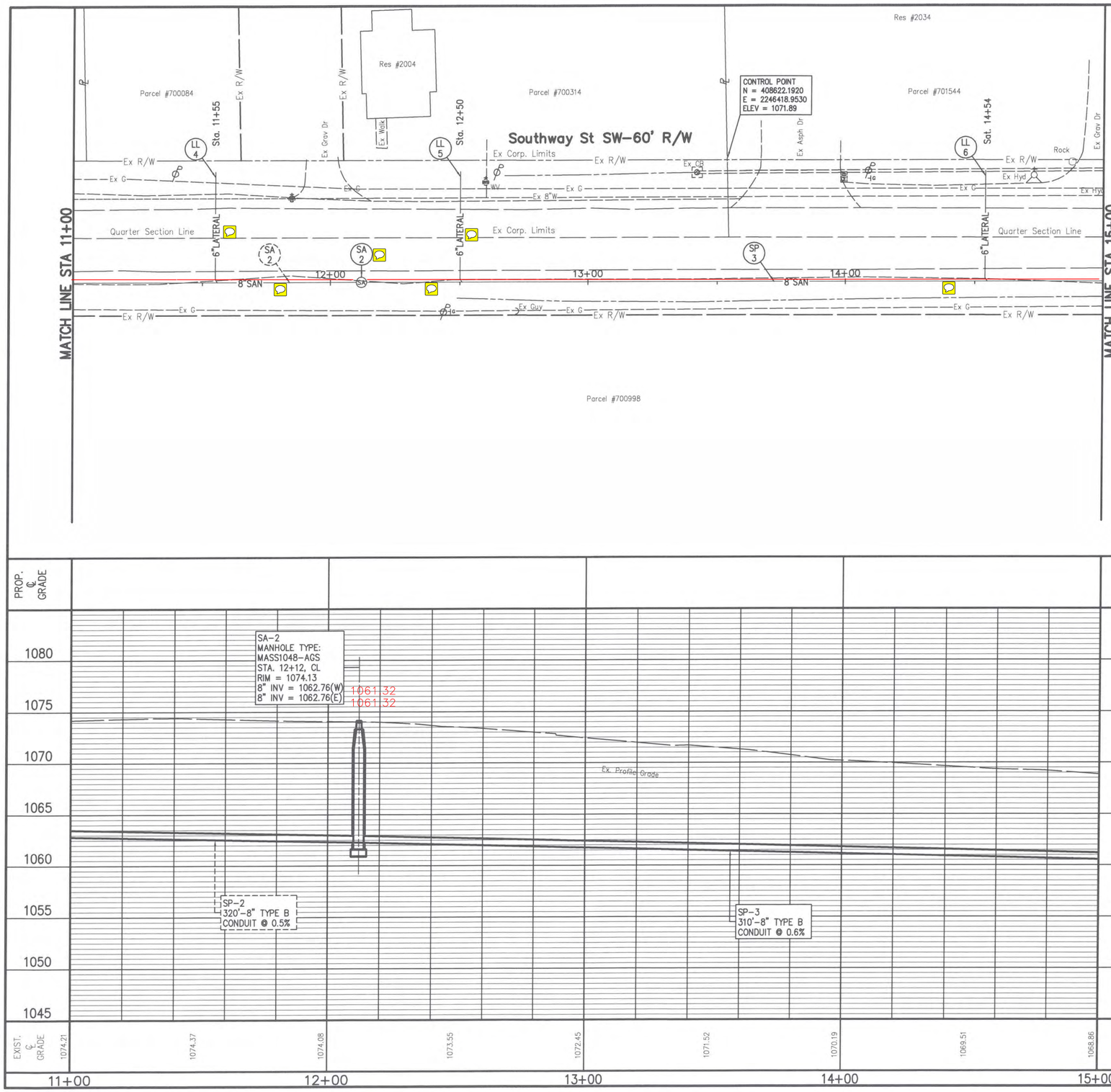

REF. No.	SIDE	STATION FROM	STATION TO	603 SANITARY 8"x8"x6" WYE	603 SANITARY 8" TYPE B CONDUIT	603 SANITARY 8" TYPE B CONDUIT	604 SANITARY MANHOLE MASS1048-AGS
				EACH	LF	LF	EACH
LL-4	RT		11+55	1	45		
LL-5	RT		12+50	1	45		
LL-6	LT		14+54	1	45		
SA-2	LT		12+12				1
SP-3	RT	12+12	15+22			310	
TOTALS CARRIED TO GENERAL SUMMARY				3	135	310	1

NW NE SW SE N

VERTICAL IN FEET 5 2.5 0

0 10 20
HORIZONTAL SCALE IN FEET

CHECKED BY: KAD
DATE: Dec, 2014
DRAWN BY: FPW
DATE: Dec, 2014

REVISIONS:
DATE | DESCRIPTION

Southway Sanitary Sewer Extension
Southway Plan and Profile Sa. 11+00 to 15+00
City of Massillon
Stark County, Ohio

Kathy Catazaro-Perry, Mayor
Massillon
City of Champions

DRAWING NAME: SouthwayPP3.dwg
CITY NUMBER: 10st03

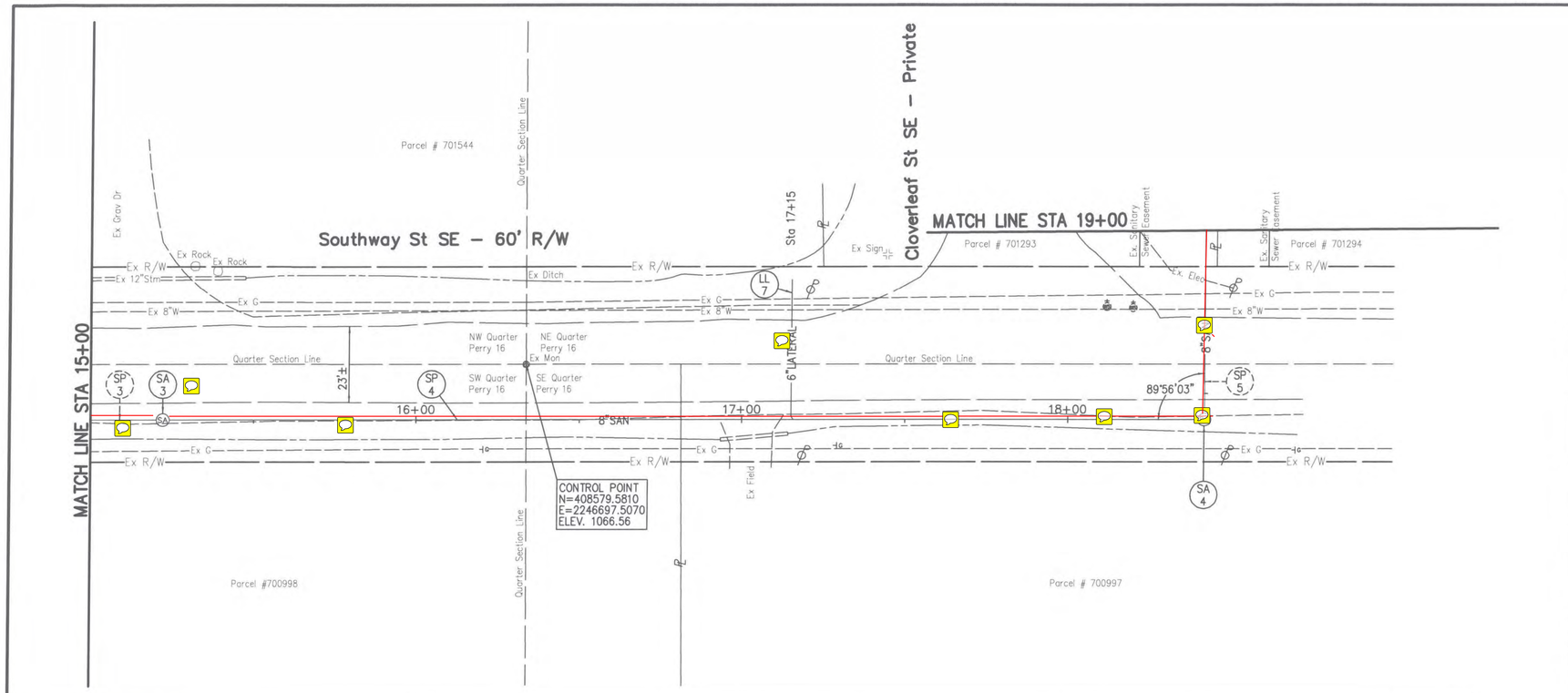

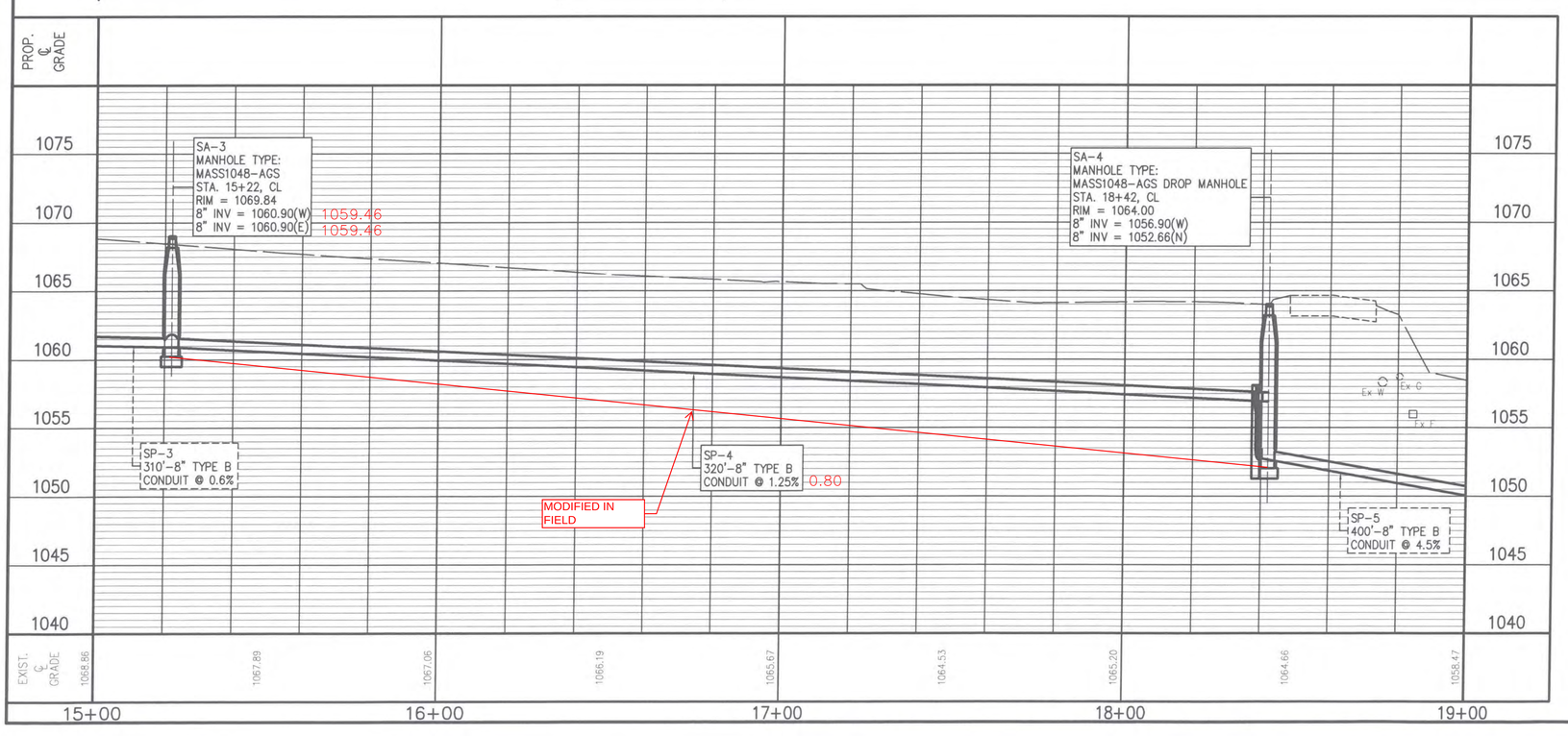

REF. No.	SIDE	STATION FROM	STATION TO	603 SANITARY 8"x8"x6" TEE WYE	603 SANITARY 6" TYPE B CONDUIT	603 SANITARY 8" TYPE B CONDUIT	604 SANITARY MANHOLE MASS1048-AGS	604 SANITARY DROP MANHOLE MASS1048-AGS
				EACH	LF	LF	EACH	EACH
LL-7	RT	17+15		1	45			
SA-3	RT	15+22					1	
SA-4	LT	18+42						1
SP-4	LT	15+22	18+42			320		
TOTALS CARRIED TO GENERAL SUMMARY				1	45	320	1	1

NW NE SW SE N

VERTICAL IN FEET 5 2.5 0

0 10 20
HORIZONTAL SCALE IN FEET

CHECKED BY: KAD
DATE: April, 2013
DRAWN BY: FPW
DATE: April, 2013

REVISIONS:

DATE	DESCRIPTION

Southway Sanitary Sewer Extension

Southway and Cloverleaf Plan and Profile Sta. 11+00 to Sta. 15+00

City of Massillon
Stark County, Ohio

Kathy Catazaro-Perry, Mayor
Massillon
City of Champions

DRAWING NAME: SouthwayPP4.dwg
CITY NUMBER: 13ss01

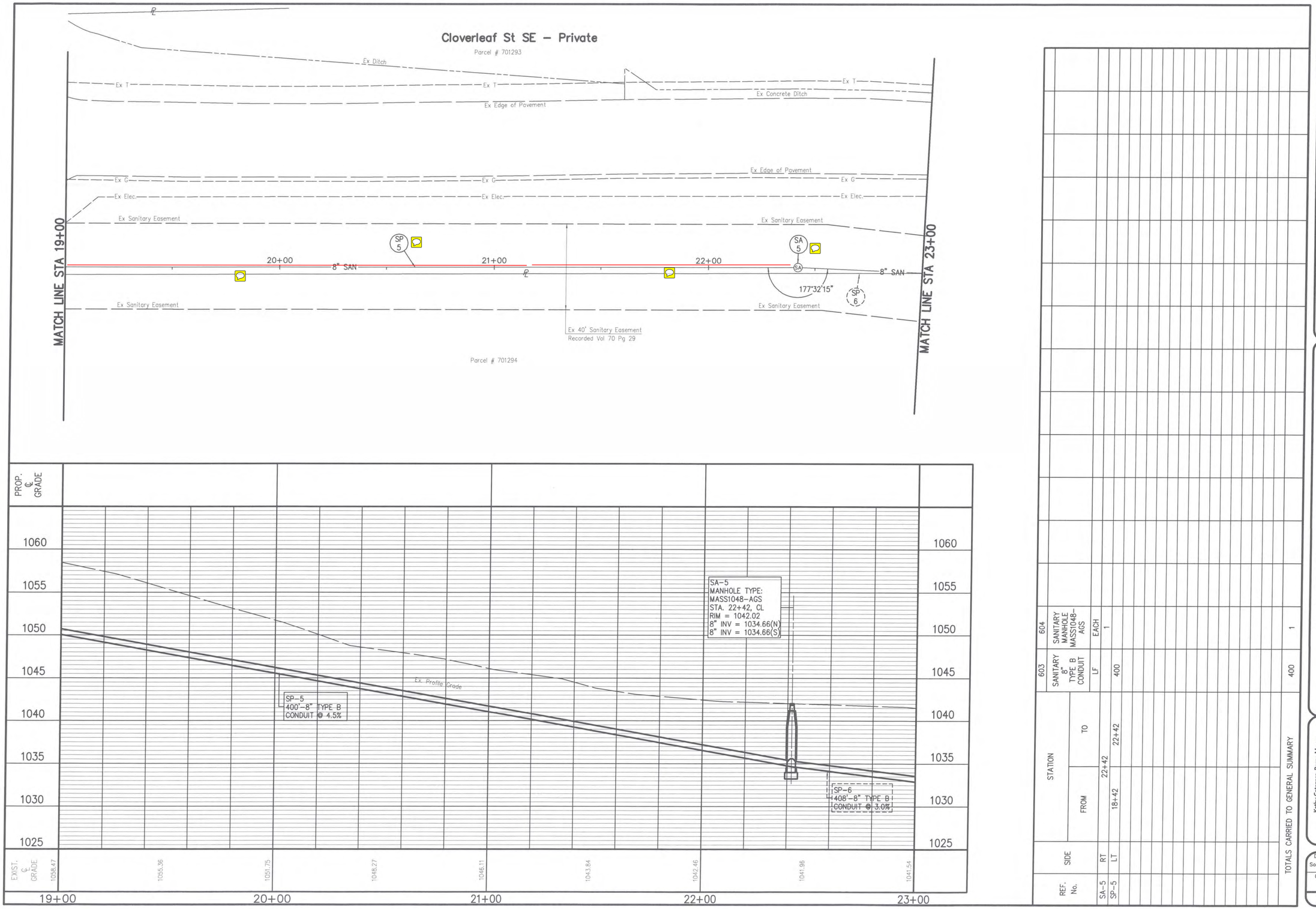

REF. No.	SIDE	STATION FROM	STATION TO	603 SANITARY 8" TYPE B CONDUIT	604 SANITARY MANHOLE MASS1048-AGS
				LF	EACH
SA-5	RT	22+42			1
SP-5	LT	18+42	22+42	400	
TOTALS CARRIED TO GENERAL SUMMARY				400	1

VERTICAL IN FEET 5 2.5 0

0 10 20
HORIZONTAL SCALE IN FEET

CHECKED BY: KAD
DATE: Dec., 2014
DRAWN BY: FPW
DATE: Dec., 2014

REVISIONS:

DATE	DESCRIPTION

Southway Sanitary Sewer Extension

Cloverleaf Plan and Profile Sta. 19+00 to Sta. 23+00

City of Massillon
Stark County, Ohio

Kathy Catazaro-Perry, Mayor
Massillon City of Champions

DRAWING NAME: SouthwayPP5.dwg
CITY NUMBER: 13ss01

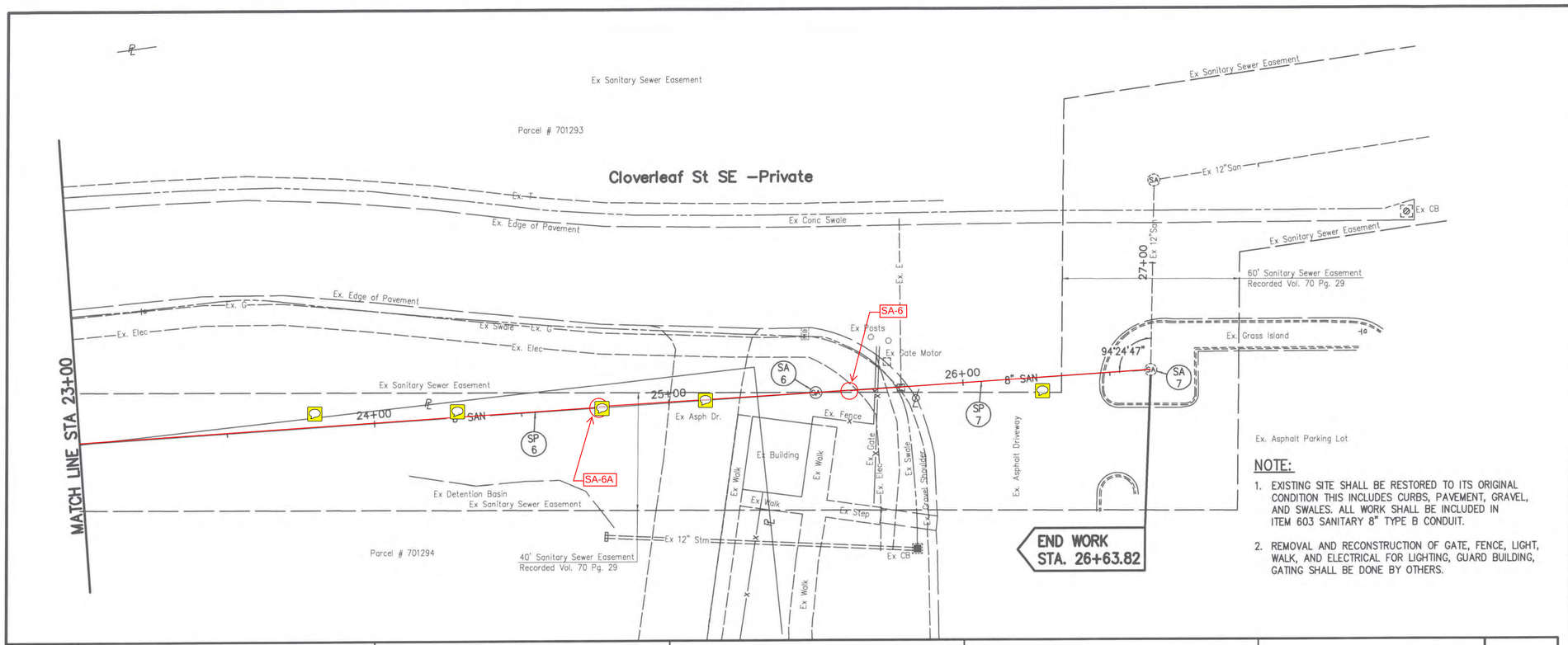

NOTE:

1. EXISTING SITE SHALL BE RESTORED TO ITS ORIGINAL CONDITION THIS INCLUDES CURBS, PAVEMENT, GRAVEL, AND SWALES. ALL WORK SHALL BE INCLUDED IN ITEM 603 SANITARY 8" TYPE B CONDUIT.
2. REMOVAL AND RECONSTRUCTION OF GATE, FENCE, LIGHT, WALK, AND ELECTRICAL FOR LIGHTING, GUARD BUILDING, GATING SHALL BE DONE BY OTHERS.

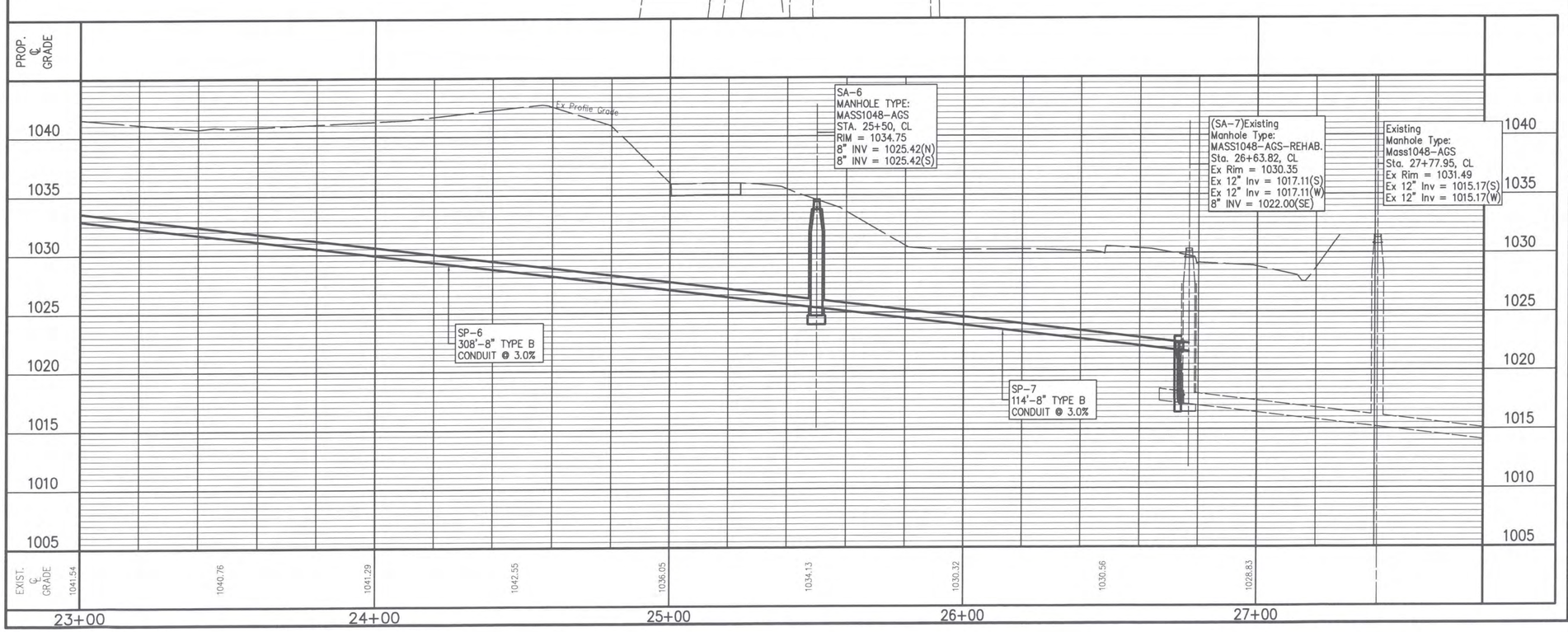

REF. No.	SIDE	STATION FROM	STATION TO	603 SANITARY 8" TYPE B CONDUIT LF	604 SANITARY DROP MANHOLE MASS1048-AGS EACH	604 SANITARY MANHOLE MASS1048-AGS REHAB. EACH
SA-6	RT	25+50	26+63.82		1	
SA-7	RT					1
SP-6	RT	22+42	25+50	306		
SP-7	LT	25+50	26+63.82	114		
TOTALS CARRIED TO GENERAL SUMMARY				420	1	1

N
NW NE SW SE

VERTICAL IN FEET 5 2.5 0

0 10 20
HORIZONTAL SCALE IN FEET

CHECKED BY: KAD
DATE: Dec, 2014
DRAWN BY: FPW
DATE: Dec., 2014

REVISIONS:

DATE	DESCRIPTION

Southway Sanitary Sewer Extension
Cloverleaf Pan and Profile Sta. 23+00 to Sta. 27+50

City of Massillon
Stark County, Ohio

Kathy Catazaro-Perry, Mayor
Massillon
City of Champions

DRAWING NAME: SouthwayPP6.dwg
CITY NUMBER: 13ss01

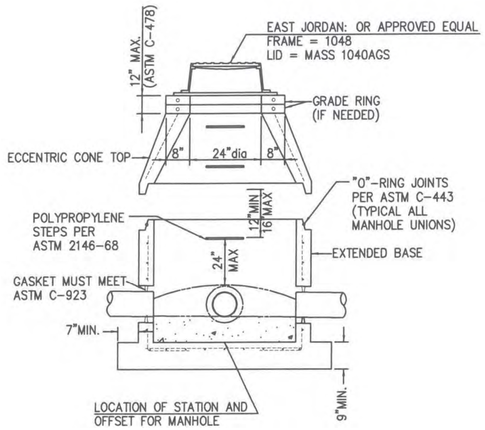

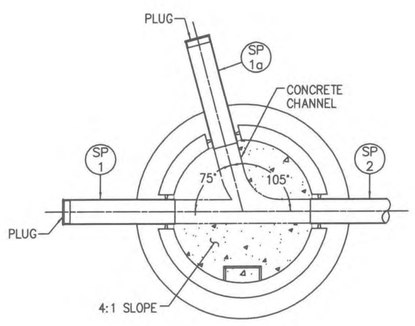

ITEM 604 SANITARY MANHOLE MASS1048-AGS (SM-1)

PRECAST CONCRETE MANHOLE
JOINTS TO BE SEALED WITH CON SEAL FED SPEC SS-S-210A

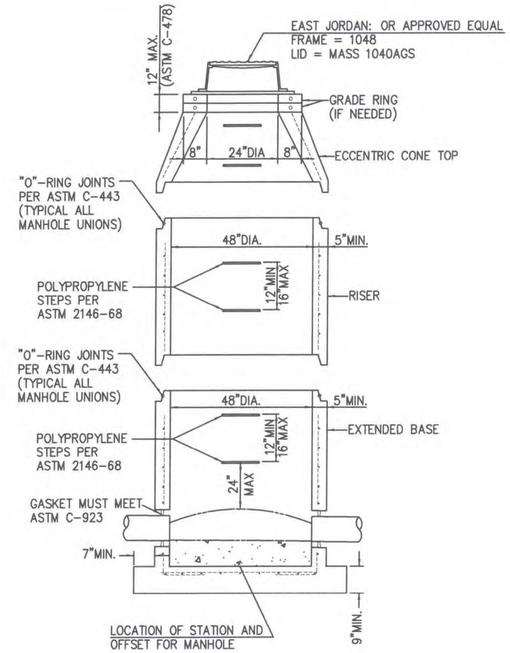

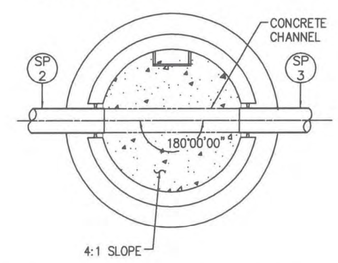

ITEM 604 SANITARY MANHOLE MASS1048-AGS (SM-2)

PRECAST CONCRETE MANHOLE
JOINTS TO BE SEALED WITH CON SEAL FED SPEC SS-S-210A

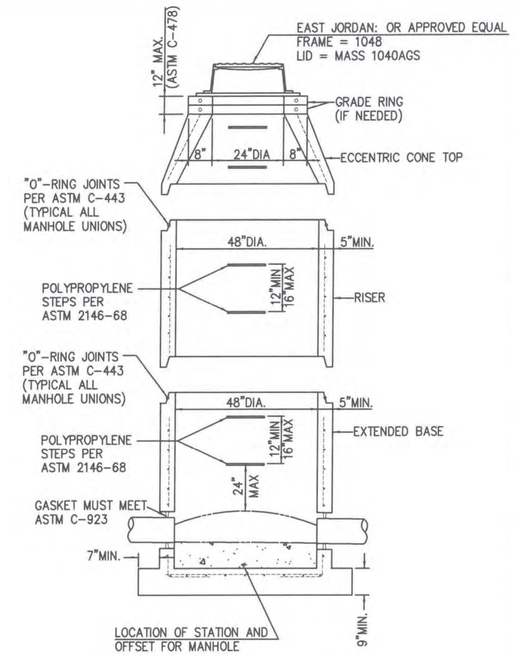

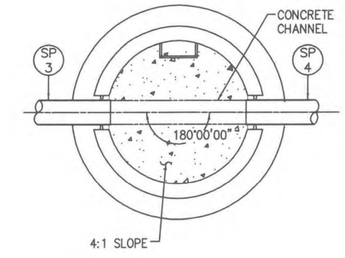

ITEM 604 SANITARY MANHOLE MASS1048-AGS (SM-3)

PRECAST CONCRETE MANHOLE
JOINTS TO BE SEALED WITH CON SEAL FED SPEC SS-S-210A

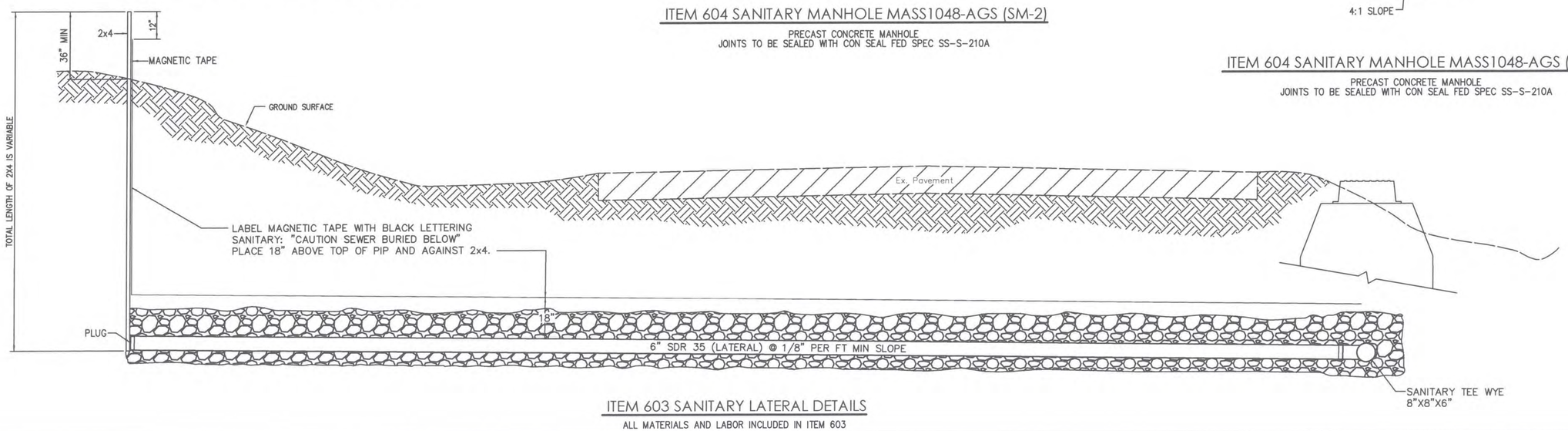

ITEM 603 SANITARY LATERAL DETAILS

ALL MATERIALS AND LABOR INCLUDED IN ITEM 603

NW NE SW SE

VERTICAL IN FEET 0 1 2

HORIZONTAL SCALE IN FEET 0 1 2

CHECKED BY:	KAD
DATE:	Dec, 2014
DRAWN BY:	FPW
DATE:	Dec, 2014

REVISIONS:

DATE	DESCRIPTION

Southway Sanitary Sewer Extension

Sanitary Details

City of Massillon
Stark County, Ohio

Kathy Catazaro-Perry, Mayor

Massillon City of Champions

DRAWING NAME: Southway01L01.dwg

CITY NUMBER: 13ss01

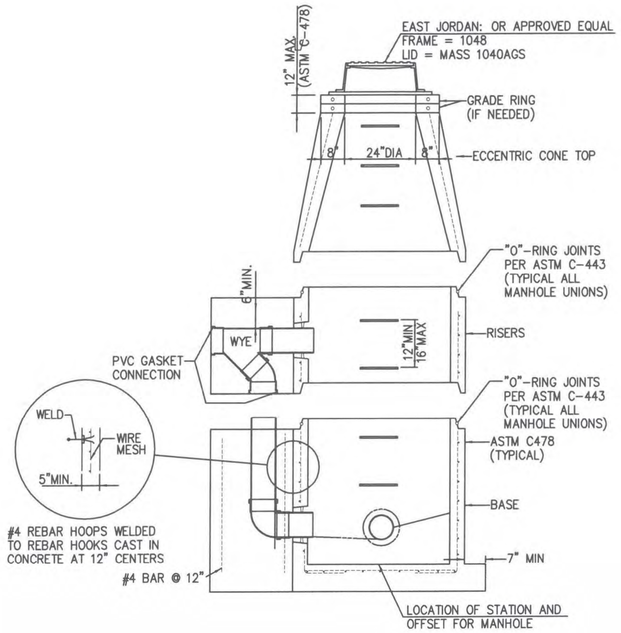

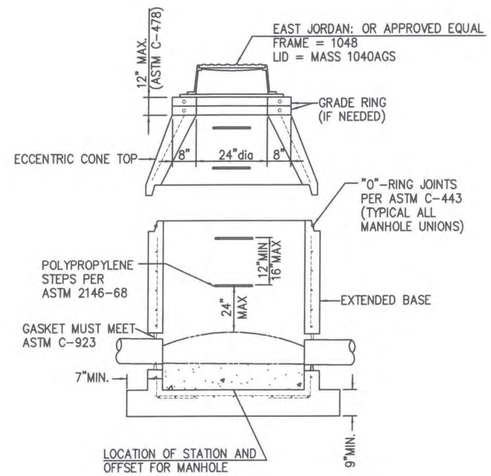

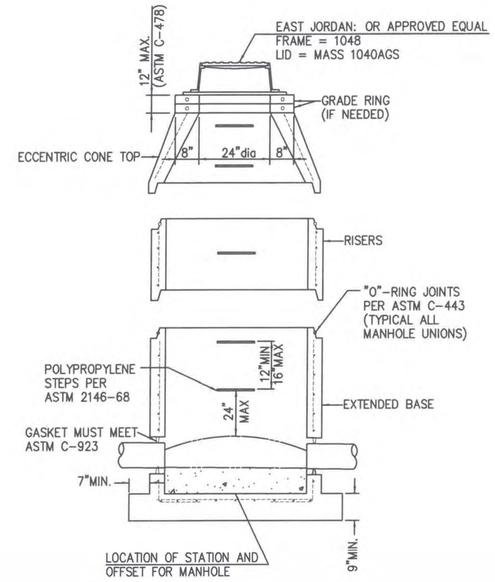

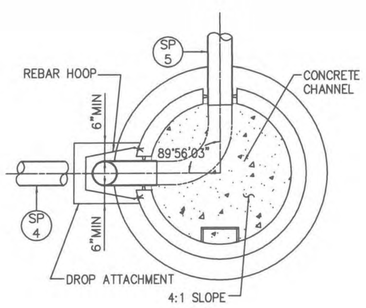

ITEM 604 SANITARY DROP MANHOLE MASS1048-AGS (SM-4)

PRECAST CONCRETE DROP MANHOLE
JOINTS TO BE SEALED WITH CON SEAL FED SPEC SS-S-210A

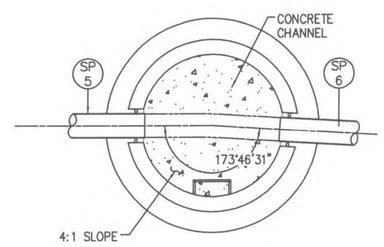

ITEM 604 SANITARY MANHOLE MASS1048-AGS (SM-5)

PRECAST CONCRETE MANHOLE
JOINTS TO BE SEALED WITH CON SEAL FED SPEC SS-S-210A

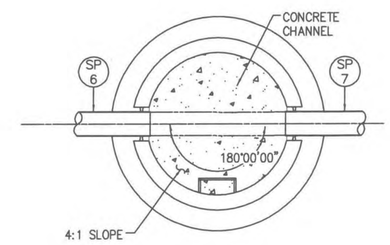

ITEM 604 SANITARY MANHOLE MASS1048-AGS (SM-6)

PRECAST CONCRETE MANHOLE
JOINTS TO BE SEALED WITH CON SEAL FED SPEC SS-S-210A

NW NE SW SE

VERTICAL IN FEET 0 1 2

HORIZONTAL SCALE IN FEET 0 1 2

CHECKED BY: KAD
DATE: Dec, 2014
DRAWN BY: FPW
DATE: Dec, 2014

REVISIONS:

DATE	DESCRIPTION

Southway Sanitary Sewer Extension
Sanitary Details
City of Massillon
Stark County, Ohio

Kathy Catazzaro-Perry, Mayor
Massillon City of Champions

DRAWING NAME: SouthwayDTL02.dwg
CITY NUMBER: 13ss01

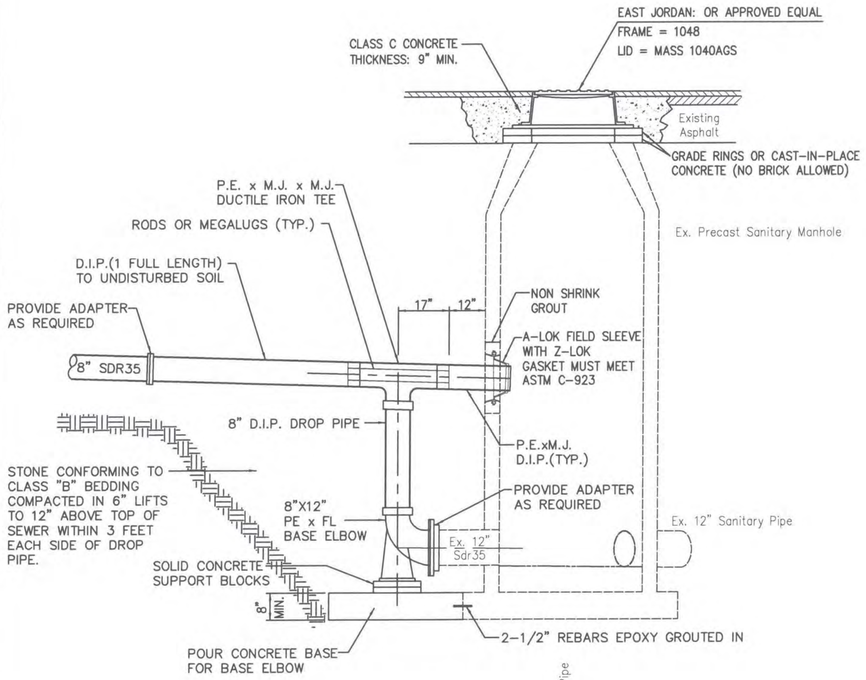

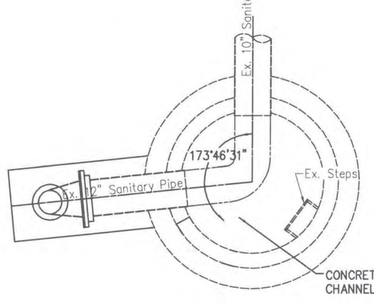

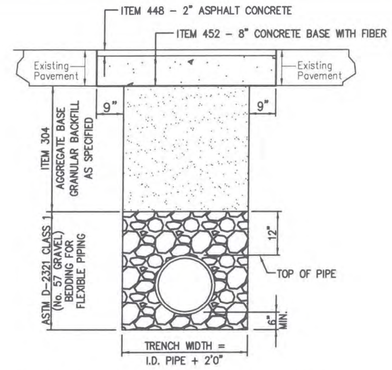

TRENCH DETAIL WITHIN PAVEMENT

ALL MATERIALS AND LABOR INCLUDED IN ITEM 603

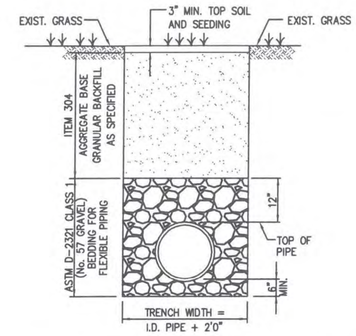

TRENCH DETAIL OUTSIDE PAVEMENT

ALL MATERIALS AND LABOR INCLUDED IN ITEM 603

TRENCH DETAIL

STEP 1.
CHECK Z-LOK CONNECTOR IN A-LOK FIELD SLEEVE AND PIPE O.D. TO BE SURE THEY ARE CORRECT

STEP 2
MARK A PERIMETER, ON THE STRUECTURE , THREE (3) INCEHES LARGER THAN THE OUTSIDE DIAMETER OF THE A-LOK FIELD SLEEVE

STEP 3
ON THIS PERMIMETER EITHER A) CORE THE ENTIRE OPENING TO CREATE A HOLE; OR B) DRILL A SERIES OF ONE (1) INCHE OR LARGER CREATE A HOLE; OR B) DRILL A SERIES OF ONE (1) INCH OR LARGER HOLES NO MORE THAN 5 INCHES APART TO CREATE AN OPENING FOR THE FIELD SLEEVE

STEP 4
SET A-LOK FIELD SLEEVE IN OPENING ON CORRECT GRADE. PACK ANNULAR SPACE BETWEEN OPENING AND OUTSIDE DEIAMETER OF FIELD SLEEVE FIRMLY WITH NON-SHRINK GROUT. CAREFULLY FOLLOW GROUT MANUFACTURER'S INSTRUCTIONS FOR MIXING, PLACING AND CURING.

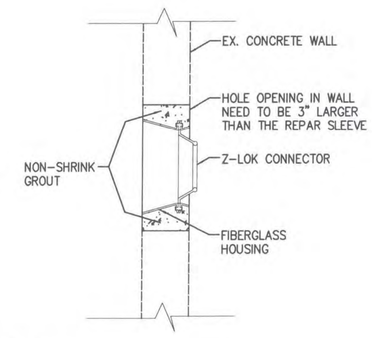

A-LOK FIELD SLEEVE WITH Z-LOK DETAIL

CONTROL

DESCRIPTION	NORTH	EAST	ELEVATION
IPF (13+53.26 LT)	408622.1920	2246418.9530	
MON(16+33.40 LT)	408579.5810	2246697.5070	1066.56

Bench Mark No. 1
Monument found at
Sta. 16+33.40, 17±' Lt.
Elevation 1066.56

CENTERLINE

DESCRIPTION	NORTH	EAST
STA. 7+00	408603.2757	2245764.2523
PI = STA. 18+42	408553.5847	2246905.1707
PI = STA. 22+42	408953.2256	2246922.1169
STA. 25+50	409260.1043	2246948.3747
STA. 26+63.82	409373.5080	2246958.0780

NOTE:

ALL MATERIAL AND LABOR TO PERFORM THE PROPER INSTALLATION OF ITEM 604 SANITARY MANHOLE MASS1048-M SHALL BE INCLUDED IN THE UNIT PRICE BID. THIS INCLUDES BUT NOT LIMITED THE REMOVAL OF EXISTING STRUCTURES, CONDUIT, ROADWAY, CURB. AND INSTALLATION OF 57 GRAVEL, ITEM 304 AGGREGATE BASE, CONDUIT PIPE, JOINT SEALER, FIELD SLEEVE AND A-LOK, FERNCO, CLASS C CONCRETE, ADPTERS, D.I.P. FITTINGS, D.I.P. PIPE, CONCRETE COLLAR, AND CURBIING.

ITEM 604 SANITARY MANHOLE MASS1048-AGS-M (SM-7)

WORK SHALL INCLUDED ALL REMOVAL AND DISPOSAL OF EXISTING

SHEET NUMBER 2	3	4	5	6	7	8	ITEM	GRAND TOTAL	UNIT	DESCRIPTION
										ROADWAY
	LUMP						201spec	LUMP	LUMP	CLEARING AND GRUBBING
										EROSION CONTROL
	LUMP						207SPEC	LUMP	LUMP	EROSION CONTROL
LUMP							659	LUMP	LUMP	TOPSOIL, SEEDING AND MULCHING
										SANITARY
		90	135	45			603	270	LF	6" SDR 35 (LATERAL)
		3	3	1			603	7	EACH	8"x8"x6" TEE WYE
		330	310	320	400	420	603	1780	LF	SANITARY 8" TYPE B CONDUIT
		1	1	1	1		604	4	EACH	SANITARY MANHOLE MASS1048-AGS
				1		1	604	2	EACH	SANITARY DROP MANHOLE MASS1048-AGS
						1	604	1	EACH	SANITARY MANHOLE MASS1048-AGS-M
							614	LUMP	LUMP	MAINTAINING TRAFFIC
LUMP							623	LUMP	LUMP	CONSTRUCTION STAKING
							624	LUMP	LUMP	MOBILIZATION

NW NE SW SE

VERTICAL IN FEET 2 1 0

HORIZONTAL SCALE IN FEET 0 1 2

CHECKED BY: KAD
DATE: Dec, 2014
DRAWN BY: FPW
DATE: Dec, 2014

REVISIONS: DATE | DESCRIPTION

Southway Sanitary Sewer Extension
Sanitary Details
City of Massillon
Stark County, Ohio

Kathy Catazaro-Perry, Mayor
Massillon City of Champions

DRAWING NAME: SouthwayDTL02.dwg
CITY NUMBER: 13ss01